РЕПУБЛИКА СРБИЈА
ЗАВОД ЗА ИНТЕЛЕКТУАЛНУ СВОЈИНУ

REPUBLIC OF SERBIA
INTELLECTUAL PROPERTY OFFICE

# ГЛАСНИК ИНТЕЛЕКТУАЛНЕ СВОЈИНЕ
# INTELLECTUAL PROPERTY GAZETTE

Београд / Belgrade 2011/4

ISSN 1452 - 2144

Завод за интелектуалну својину Републике Србије
The Intellectual Property Office of the Republic of Serbia

# ГЛАСНИК ИНТЕЛЕКТУАЛНЕ СВОЈИНЕ
## INTELLECTUAL PROPERTY GAZETTE



| | | | | | |
|---|---|---|---|---|---|
| **ГЛАСНИК ИНТЕЛЕКТУАЛНЕ СВОЈИНЕ Тираж: 200** | **Година излажења XCI** | **2011** | **Број 4** | P 51561 - 51636<br>1198 - 1219 U<br>Ж 62501 - 62800 | **Датум објављивања: 2011-08-31 Београд** |

Издаје и штампа: **Завод за интелектуалну својину,** Београд, Кнегиње Љубице 5, Београд, Србија
Телефони:011 20 25 800 (централа); факс: 011 311 23 77

E-mail: zis@zis.gov.rs
**www.zis.gov.rs**

## САДРЖАЈ

**1. ПАТЕНТИ** ..... 2250
**1.1. ОБЈАВА ПРИЈАВА ПАТЕНАТА** ..... 2251
1.1.1. Индексне табеле пријава патената ..... 2282
**1.2. ОБЈАВА ПАТЕНАТА**..... 2292
1.2.1. Индексне табеле патената..... 2332
1.2.2. Престанак важности регистрованих патената 2347
**1.3. ОБЈАВА МАЛИХ ПАТЕНАТА** ..... 2350
1.3.1. Индексне табеле малих патената ..... 2358
1.3.2 Престанак важности регистрованих малих патената..... 2362
**1.4. ЗАХТЕВИ ЗА ПРОШИРЕЊЕ ЕВРОПСКИХ ПРИЈАВА ПАТЕНАТА**..... 2363
1.4.1. Међународни кодови за идентификацију библиографских података патената према – **WIPO ST. 9** ..... 2364
1.4.2. Објава захтева за проширење европских пријава патената. ..... 2365
1.4.2.1. Индекси захтева за проширење европских пријава патената - бројеви, подносиоци и класификационе ознаке... 2464
1.4.3. Објава повучених захтева за проширење европских пријава патената..... 2567
1.4.3.1. Индекси повучених захтева за проширење европских пријава патената - бројеви, подносиоци и класификационе ознаке..... 2615
**2. ЖИГОВИ**..... 2664
**2.1. ОБЈАВА ЖИГОВА**..... 2665
2.1.1. Индексне табеле регистрованих жигова..... 2742
2.1.1.1. Објава уписаних промена регистрованих жигова од 2011-06-06 до 2011-08-05 године..... 2754
2.1.2. Објава инф. о међународно рег. жиговима за којеје затражено признање у Републици Србији..... 2774
**3. ИНДУСТРИЈСКИ ДИЗАЈН** ..... 2819
3.1.1.1 Престанак важности регистрованог дизајна од 2010-12-06 до 2011-02-05 ..... 2820
**4. ПОДЛИСТАК**.....2821-2832

## CONTENTS

**1. PATENTS**.....2250
**1.1. Publication of Patent Applications** .....2251
1.1.1. Patent Applications Indexes.....2282
**1.2. Publication of Patents** .....2292
1.2.1. Patents Indexes .....2332
1.2.2. Termination of validity of Registred Patents.....2347
**1.3. Publication of Petty Patents** .....2350
1.3.1. Petty Patents Indexes .....2358
1.3.2. Termination of validity of Registred Petty Patents.....2362
**1.4. Request for the Extension of the effects of European Patent Applications** .....2363
1.4.1. Recommendation concerning Bibliographic Data on and relating to Patents - WIPO ST. 9 ....2364
1.4.2. Publication of Request for Extension to European Patent Applications.....2365
1.4.2.1. Indexes of Request for the Extension of the effects of European Publication of withdrawn applications for the Ehtension of the effects of European Patent Applications .....2464
1.4.3. Indexes of withdrawn applications for the Extension of the effects of European Patent Applications – Numbers and Applicants Patent Applications.....2567
1.4.3.1. Indexes of withdrawn applications for the Extension of the effects of European Patent Applications – Numbers, Applicants and Clasification Symbols.....2615
**2. TRADEMARKS** .....2664
**2.1. Publication of Trademarks** .....2665
2.1.1. Trademark Indexes .....2742
2.1.1.1. Publications of Entered Changes of Registered Trademarks from June 6th, 2011 to August 5th, 2011.....2754
2.1.2. Publication of Information on International Registrations of Marks for which Protection has been requestedin the Republic of Serbia.....2774
**3. INDUSTRIAL DESIGNS** .....2819
3.1.1.1. Termination of validity of Registered Desion from December 6th, 2010 to Februaru 5th, 2011 .....2820
**4. SUPPLEMENT**.....2821-2832

## КОДОВИ ЗЕМАЉА (WIPO standard ST.3)

AD Андора
AE Уједињени Арапски емирати
AF Авганистан
AG Антигва и Барбуда
AI Ангила
AL Албанија
AM Јерменија
AN Холандски Антили
AO Ангола
AR Аргентина
AT Аустрија
AU Аустралија
AW Аруба
AZ Азербејџан
BA Босна и Херцеговина
BB Барбадос
BD Бангладеш
BE Белгија
BF Горња Волта
BG Бугарска
BH Бахреин
BI Бурунди
BJ Бенин
BM Бермуди
BN Брунеј Даресалам
BO Боливија
BR Бразил
BS Бахами
BT Бутан
BV Буве Острва
BW Боцвана
БУ Белорусија
BZ Белизе
CA Канада
CD ДР Конго
CF Централноафричка Република
CG Конго
CH Швајцарска
CI Обала Слоноваче
CK Кук Острва
CL Чиле
CM Камерун
CN Кина
CO Колумбија
CR Костарика
CU Куба
CV Зеленортска Острва
CY Кипар
CZ Чешка Република
DE Немачка
DJ Џибути
DK Данска
DM Доминика
DO Доминиканска Република
DZ Алжир
EC Еквадор
EE Естонија
EG Египат
EH Западна Сахара
ER Еритреја
ES Шпанија
ET Етиопија
FI Финска
FJ Фиџи
FK Фокландска Острва
FO Фарска Острва
FR Француска
GA Габон
GB Велика Британија
GD Гренада
GE Грузија
GH Гана
GI Гибралтар
GL Гренланд
GM Гамбија
GN Гвинеја
GQ Екваторијална Гвинеја
GR Грчка
GS Јужна Џорџија и Јужна Сендвичка Острва
GT Гватемала
GW Гвинеја-Бисау
GY Гвајана
HK Хонг Конг
HN Хондурас
HR Хрватска
HT Хаити
HU Мађарска
ID Индонезија
IE Ирска
IL Израел
IN Индија
IQ Ирак
IR Иран
IS Исланд
IT Италија
JM Јамајка
JO Јордан
JP Јапан
KE Кенија
KG Киргизија
KH Камбоџа
KI Кирибати
KM Коморска Острва
KN Сент Киц и Невис
KP ДНР Кореја
KR Република Кореја
KW Кувајт
KY Кајманска Острва
KZ Казахстан
LA Лаос
LB Либан
LC Сент Лусија
LI Лихтенштајн
LK Шри Ланка
LR Либерија
LS Лесото
LT Литванија
LU Луксембург
LV Летонија
LY Либија
MA Мароко
MC Монако
ME Црна Гора
MD Молдавија
MG Мадагаскар
MK Македонија
ML Мали
MM Мијанмар
MN Монголија
MO Макао
MP Северна Маријанска Острва
MR Мауританија
MS Монтсерат
MT Малта
MU Маурицијус
MV Малдиви
MW Малави
MX Мексико
MY Малезија
MZ Мозамбик
NA Намибија
NE Нигер
NG Нигерија
NI Никарагва
NL Холандија
NO Норвешка
NP Непал
NR Науру
NZ Нови Зеланд
OM Оман
PA Панама
PE Перу
PG Папуа Нова Гвинеја
PH Филипини
PK Пакистан
PL Пољска
PT Португалија
PW Палау Острва
PY Парагвај
QA Катар
RS Србија
RO Румунија
RU Руска Федерација
RW Руанда
SA Саудијска Арабија
SB Соломонска Острва
SC Сејшели
SD Судан
SE Шведска
SG Сингапур
SH Света Јелена
SI Словенија
SK Словачка
SL Сиера Леоне
SM Сан Марино
SN Сенегал
SO Сомалија
SR Суринам
ST Сао Томе и Принсипе
SV Салвадор
SY Сирија
SZ Свазиленд
TC Турска и Каикоска Острва
TD Чад
TG Того
TH Тајланд
TJ Тајикистан
TM Туркменистан
TN Тунис
TO Тонга
TP Источни Тимор
TR Турска
TT Тринидад и Тобаго
TV Тувалу
TW Тајван
TZ Танзанија
UA Украјина
UG Уганда
US САД
UY Уругвај
UZ Узбекистан
VA Ватикан
VC Сент Винсент и Гренадини
VE Венецуела
VG Британска Девичанска Острва
VN Вијетнам
VU Вануату
WS Самоа
YE Јемен
ZA Јужноафричка Република
ZM Замбија
ZW **Зимбабве**

## Кодови међународних организација

WO Светска организација за интелектуалну својину (WIPO)
IB Међународни биро (у својству пријемног бироа за PCT)
EP Европски патентни биро (EPO)
BX Биро Бенелукса за жигове и моделе
EA Евроазијска патентна организација (EAPO)
OA Афричка организација за интелектуалну својину (OAPI)
AP Афричка регионална организација за индустријску својину (ARIPO)
GC Патентни завод Савета за сарадњу арапских земаља у Заливу (GCG)

# Патенти / Patents

## Међународни кодови за идентификацију библиографских података о патентима - WIPO - ST. 9

## Recommendation concerning bibliographic data on and relating to patents - WIPO - ST. 9

| | | |
|---|---|---|
| Број документа | **(11)** | Number of document |
| Врста документа | **(13)** | Kind of document |
| Број пријаве | **(21)** | Number assigned to the application |
| Датум подношења пријаве | **(22)** | Filing date of the application |
| Други датуми, датум излагања на међународној изложби | **(23)** | Other dates, date of exhibiting at the intrnational exibition |
| Подаци о праву првенства | **(30)** | Priority data |
| Датум објављивања пријаве | **(43)** | Publication date of the unexamined application |
| Датум објављивања патента | **(45)** | Publication date of registered patent |
| Међународна класификација патената | **(51)** | International Patent Classification code |
| Назив проналаска | **(54)** | Title of invention |
| Апстракт или патентни захтев | **(57)** | Abstract or patent claim |
| Број основне пријаве (или патента) за који се подноси допунска пријава | **(61)** | Number of the earlier application (or patent) to which the present document is an addition |
| Број првобитне пријаве из које је пријава издвојена | **(62)** | Number of the earlier application from which the present document has been divided out |
| Име подносиоца пријаве | **(71)** | Name of the applicant |
| Име проналазача | **(72)** | Name of the inventor |
| Име носиоца патента | **(73)** | Name of the owner of patent |
| Име пуномоћника | **(74)** | Name of the representative |
| Број и датум подношења међународне пријаве | **(86)** | Number and filing date of the international application |
| Број и датум међународне објаве | **(87)** | Number and date of the publication of the interational application |
| Датум и број пријаве европског патента | **(96)** | Date and number of the European patent application |
| Датум и број објаве признатог европског патента | **(97)** | Date and number of publication of the granted European patent |

## ВРСТЕ ДОКУМЕНАТА
## TYPES OF DOCUMENTS

| | | |
|---|---|---|
| Објава пријава патената | **A** | Publication of patent applications |
| Регистровани патенти | **B** | Registered patents |
| Мали патенти | **U** | Petty patents |

## ОБЈАВА ПРИЈАВА ПАТЕНАТА

PUBLICATION OF PATENT APPLICATIONS

**(51)** ***A 01 J 11/00*** (2006.01) **(11) 2009/0340**
***A 01 J 9/00*** (2006.01) **(13) A**
***A 23 C 3/00*** (2006.01)
***A 23 C 23/00*** (2006.01)
***A 01 J 99/00*** (2006.01)
(21) P-2009/0340 (22) 23.07.2009.

**(54) UREĐAJ ZA PROIZVODNJU SKORUPA-KAJMAKA**

(71) MAĆEJ, Ognjen, dr, Jurija Gagarina 108, Novi Beograd, RS; MARKOVIĆ, Dušan, Gundulićev venac 34, Beograd, RS; GRUBOR, Petar, Vojvođanskih brigada 111, Zemun, RS; MANČIĆ, Saša, Vojvode Šupljikca 39, Novi Sad, RS

(72) MAĆEJ, Ognjen, dr, Jurija Gagarina 108, Novi Beograd, RS; MARKOVIĆ, Dušan, Gundulićev venac 34, Beograd, RS; GRUBOR, Petar, Vojvođanskih brigada 111, Zemun, RS; MANČIĆ, Saša, Vojvode Šupljikca 39, Novi Sad, RS

(57) Suština pronalaska je da pokazuje tehničko rešenje za oblast mlekarstva i da se njegovom primenom može kvalitetnije i brže proizvesti skorup-kajmak. Vekovima su generacije verovale da se skorup-kajmak ne može proizvesti na drugi način već samo priborom i postupkom kakav se koristi u domaćoj radinosti i da se samo sa njim može sačuvati njegova organoleptička originalnost. Umesto drvene posude za proizvodnju skorupa-kajmaka konstruisan je uređaj (1) za tehnički savršeniji način proizvodnje čijom primenom je nastao i novi tehnološki postupak proizvodnje. Potpuna kontrola uslova za proizvodnju koje obezbeđuje uređaj i izvršenja postupka proizvodnje skorupa-kajmaka u uređaju (1) omogućava da se proizvede proizvod kvalitetnijih osobina od skorupa-kajmaka proizvedenog u domaćoj radinosti. Zatvoren izolovan prostor komore (10) uređaja (1) stvara pouzdane higijenske uslove a stalno kretanjem vazduha sa regulisanom temperaturom i vlagom u toku postupka proizvodnje određuje najkraće vreme izdvajanja masnoće i belančevina mleka i proizvodnju skorupa-kajmaka standardno dobrih hemiskih, organoleptičkih i baktertrioloških osobina. Sa uređajem (1) je prevazđen postojeći način proizvodnje skorupa-kajmaka a postupak proizvodnje stavljen pod kontrolu i primenljiv je u industriskim uslovima mlekara.

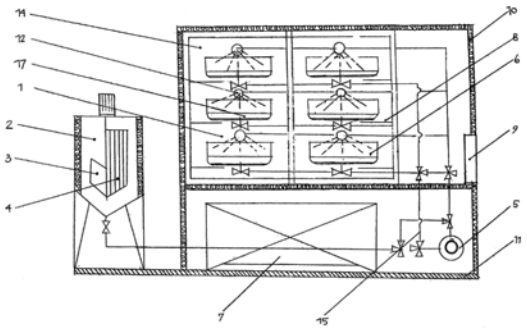

(54) DEVICE FOR CREAM PRODUCTION

(57) Invention herewith described refers to the technical solution for the field of dairy and by its implementation the production of cream can be improved and speeded up. For centuries, generations believed that the cream can not be produced in any other way but only by using the equipment and procedure used in local (domestic) industry and that only with it can be kept its organoleptic originality. Instead of wooden vessels for the production of the skim-cream, a device (1) for perfect technical method of production is designed whose application (use) created a new technological process too. Full control of production conditions provided by the device and the execution process of cream manufacturing in the device (1) allows producing a quality product cream made of cream produced in local industries. Closed insulated chamber (10) of the device (1) creates a reliable hygienic conditions and the constant movement of temperature and humidity regulated air during the manufacturing process determines the shortest time for fat and protein separation and the production of the cream of standard good chemical, organoleptic and bacteriological characteristics. With the device (l) the existing way of the cream production is surpassed and the production process is controlled and applicable in the industrial conditions of dairies.

**(51)** ***A 23 C 20/00*** (2006.01) **(11) 2009/0442**
***A 23 C 19/055*** (2006.01) **(13) A**
(21) P-2009/0442 (22) 15.10.2009.

**(54) POSTUPAK ZA INDUSTRIJSKU PROIZVODNJU SIRA BEZ KORIŠĆENJA MLEKA**

(71) MEDIĆ, Dragana, Svetog Save 6, 21480 Srbobran, RS

(72) MEDIĆ, Dragana, Svetog Save 6, 21480 Srbobran, RS

(74) VLAHOVIĆ, Slobodan, Radoja Dakića 35/32, 11070 Novi Beograd, RS

(57) U ovoj prijavi prikazan je postupak za industrijsku proizvodnju sira, bez korišćenja mleka. Polazne supstance za dobijanje sira primenom ovog postupka su krompirov škrob, biljna (palmina) mast, kuhinjska so, voda, fosforna kiselina i aroma sira. Postpak dobijanja čini nekoliko koraka, pri čemu se najpre odmeri potrebna količina komponenti. Nakon toga se domerena količina stavlja se u Stephan kuter, koji se zatvori, te se zatim homogenizuje smesa u 3 faze: mešanje - 3 min do postizanja 45°C, daljnje mešanje 7±1 min do postizanja 80°C, te treća faza - kremiranje 1 min do postizanja 85°C. Nakon kuvanja, smesa se sipa u namensku posudu, okretanjem Stephan kutera, a zatim u punilicu. Na produžetak punilice, stavlja se folija do ivice nastavka. Nakon punjenja folije, vrši se klipsanje i odnošenje upakovanog nedeklarisanog proizvoda na hlađenje. Hlađenje traje najmanje tri dana na temperaturi od +4°C.

(54) PROCEDURE FOR INDUSTRIAL CHEESE PRODUCTION WITHOUT THE USE OF MILK

(57) Invention herewith described refers to the procedure for industrial cheese production without the use of milk. The starting substances for cheese production by applying this procedure are potato starch, vegetable (palm) fat, salt, water, phosphoric acid and cheese flavour. The procedure involves a few steps, whereat the required quantity of components is weighed first. After that the weighed amount is put into Stephan cutter, the cutter is closed and then the mixture is homogenized in 3 stages: mixing - 3 minutes until reaching 45°C, further mixing for 7 ± 1 minutes to reach 80°C, and the third phase - cremation for 1 min until reaching 85°C. After cooking, the mixture is poured into a special-purpose container by rotating Stephan cutter, and then into the filling machine. On the filling machine extension there is placed a foil to the edge of the extension. After filling the foil and clipping, the packaged uncertified product is taken for cool. The cooling takes at least three days at +4°C.

**(51)** ***A 23 K 1/175*** (2006.01) **(11) 2009/0434**
**(13) A**
(21) P-2009/0434 (22) 13.10.2009.
**(54) POSTUPAK ZA DOBIJANJE MINERALNOG DODATKA ZA PREVENIRANJE POREMEĆAJA pH-ACIDOZE BURAGA KRAVA I NJEGOVA PRIMENA**
(71) INSTITUT ZA TEHNOLOGIJU NUKLEARNIH I DRUGIH MINERALNIH SIROVINA, Franše D` Eperea 86, 11000 Beograd, RS
(72) ADAMOVIĆ, Milan, Bratstva i jedinstva 113, 11211 Beograd-Borča, RS
(57) Mineralni dodatak za preveniranje poremećaja pH-acidoza buraga (predželudac) krava proizvoden je na bazi magnezijum oksida, natrijum bikarbonata, prirodnog bentonita i prirodnog zeolita. Korišćenje ovog mineralnog dodatka u ishrani krava omogućuje se regulisanje pH sadržaja buraga u okviru optimalnih fizioloških vrednosti (6 do 7). Zahvaljujući sastavu ovaj mineralni dodatak, pored regulaisanja pH buraga krava, doprinosi i adsorpciji mikotoksina, toksičnih metala, radionukleida, viška amonijaka, metana i ugljen dioksida kao i redukciji rezidua navedenih štetnih materija u mleku i mesu. Proizvodi se mešanjem navedenih komponenti u turbomikseru u trajanju od 3 minute pri 3000 obrtaja/min. Koristi se kao dodatak krmnim smešama za ishranu krava u količini od 1-2%.

(54) PROCEDURE FOR GETTING MINERAL ADDITIVE FOR PREVENTION OF pH DERANGEMENT – RUMINAL ACIDOSIS

(57) Invention herewith described refers to the mineral supplement for the prevention of pH derangement - ruminal acidosis in cows produced on the basis of magnesium oxide, sodium bicarbonate, natural bentonite and natural zeolite. The use of this mineral supplement in the diet of cows allows the regulation of the rumen's content pH within optimal physiological values (6 to 7). Owing to its composition this mineral supplement, besides regulating the ruminal pH in cows, also contributes to adsorption of mycotoxins, toxic metals, radionuclides, an excess of ammonia, methane and carbon dioxide as well as to the reduction of the above mentioned harmful substance residues in milk and meat. It is produced by mixing these components in a turbo mixer for 3 minutes at 3000 rpm. It is used as a supplement to the feed mixture for cows in the amount of 1-2%.

**(51)** ***A 24 F 13/00*** (2006.01) **(11) 2009/0480**
***A 24 F 47/00*** (2006.01) **(13) A**
***A 24 F 19/00*** (2006.01)
(21) P-2009/0480 (22) 04.11.2009.
**(54) UREĐAJ ZA SAKUPLJANJE DIMA DUVANA**
(71) MILIĆEVIĆ, Draško, Slobode 5/14, 11300 Smederevo, RS
(72) MILIĆEVIĆ, Draško, Slobode 5/14, 11300 Smederevo, RS
(57) Направа за скупљање дима дувана има за новост то што се састоји из пластичне кесе (1), цевчице (2) за удувавање, затварача (3), оковратника (4), тела (5) пиксле, поклопца (6) пиксле и чепа (7). Пластична кеса (1) је направљена од финог, танког пластичног материја. Она може да се шири по обиму када се у њу удувава дим дувана. Горњи део пластичне кесе (1) је раван и има отвор на средини у који је залепљена цевчица (2) за удувавање. Цевчица (2) за удувавање и затварач (3) имају навој. На горњем делу пластичне кесе (1) је залепљен оковратник (4) који је направљен од пантљике или ластиша. Цевчица за удувавање (2) и затварач (3) су израђени од пластике. Тело (5) пиксле и поклопац (6) пиксле су израђени од стакла. У центру поклопца (6) пиксле се налази отвор у који се ставља цигарета за време пушења. Пречник отвора је исти као и пречник цигарете, да не би излазио дим из цигарете из пиксле. Пошто је пикола потпуно затворена када је у њеном отвору запаљена цигарета, смањено је њено сагоревање и ослобађање дима. Пластична кеса (1) се помоћу оковратника (4) поставља на врат пушача, тако да му се цевчица за удувавање (2) налази у близини уста. Када пушач увуче дим од цигарете одмах ставља цигарету у отвор на поклопцу (6) пиксле, а дим од цигарете из уста удувава у пластину кесу (1), кроз цевчицу за удувавање (2) са које је скинуо затварач (3). После удувавања дима дувана у пластичну кесу (1) пушач одмах ставља затварач (3) на цевчицу за удувавање (2).

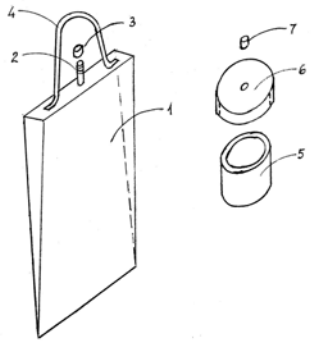

(54) DEVICE FOR TOBACCO SMOKE COLLECTION

(57) Invention herewith described refers to the device for tobacco smoke collection consisting of a plastic bag (1), an insufflation tube (2), a lid (3), collar (4), body (5) of the ashtray, ashtray cover (6) and a cap (7). The plastic bag (1) is made of fine, thin plastic material. It can expand in size when tobacco smoke is blown in. The upper part of the plastic bag (1) is flat and has a hole in the middle in which is affixed the insufflation tube (2). The insufflation tube (2) and the cap (3) have a thread. To the upper part of the plastic bag (1) there is glued the collar (4) made of a ribbon or an elastic band. The insufflation tube (2) and the cap (3) are made of plastic. The body (5) of the ashtray and the cover (6) of the ashtray are made of glass. In the centre of the cover (6) of the ashtray there is an opening into which is placed a cigarette during smoking. The diameter of the opening is the same as the diameter of the cigarette thus preventing cigarette smoke coming from the ashtray. As the ashtray is completely closed when the lit cigarette is in its opening, the cigarette combustion and the smoke release are reduced. The plastic bag (1) is, by means of the collar (4), placed on the neck of a smoker, so that the insufflation tube (2) is near the smoker's mouth. When the smoker drags cigarette smoke, immediately puts the cigarette into the opening in the cover (6) of the ashtray and the cigarette smoke from the mouth blows into the plastic bag (1) through the insufflation tube (2) fro which he took off its cap (3). After blowing tobacco smoke into the plastic bag (1), the smoker immediately puts the cap (3) on the insufflation tube (2).

---

**(51)** ***A 42 B 1/18*** (2006.01) **(11) 2009/0539**
***A 45 B 11/04*** (2006.01) **(13) A**
(21) P-2009/0539 (22) 10.12.2009.
**(54) ŠEŠIR KIŠOBRAN**
(71) MILIĆEVIĆ, Draško, Ul. Slobode 5/14, 11300 Smederevo, RS
(72) MILIĆEVIĆ, Draško, Ul. Slobode 5/14, 11300 Smederevo, RS
(57) Шешир кишобран има за новост то што се састоји из пластичне капе (1) са ободом, 8 пластичних лајсни (2) и кишобранског платна (3). Пластична капа (1) је израђена од пластичног материјала и има обод ширине 50(мм). По кругу обода су, на сваких 45, избушена по 2 отвора, који се поклапају са отворима на једном крају пластичних лајсни (2). Кроз ове отворе се 8 пластичне лајсне (2) причвршћују за обод пластичне капе (1) помоћу поп нитни. Пречник шешир кишобрана зависи од дужине пластичних лајсни (2) и за одрасле особе је он већи него за децу. Кишобран платно (3) је израђено од водонепропустивог материјала и има кружни облик. У средини кишобранског платна (3) је израђен отвор према пречнику пластичне капе (1). Кишобранско платно (3) се ушива концем за пластичне лајсне (2) и лепи се за обод пластичне капе (1) са доње стране помоћу водонепропустивог лепка (нпр. синтелан лепак). Овакав шешир кишобран се поставља на главу човека и треба да има онолики пречник који је довољан да заштити главу и тело човека од кише. Шешир кишобран може да се направи и од пластике као једна компактна целина.

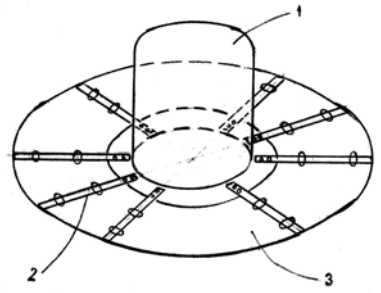


(54) HAT- UMBRELLA

(57) Invention herewith described refers to the hat-umbrella consisting of a plastic cap (1) with the brim, 8 plastic strips (2) and umbrella fabric (3). The plastic cap (1) is made of plastic fabric and has a brim 50 mm wide. Along the brim, at every 450, there are drilled two holes matching the holes on one end of the plastic strip (2). Through these holes, 8 plastic strips (2) are attached to the brim of the plastic cap (1) with blind rivets. The hat-umbrella diameter depends on the length of the plastic strips (2) and it is bigger for adults than for children. The umbrella fabric (3) is made of a waterproof material and has a circular shape. In the middle of the umbrella fabric (3) there is an opening made according to the diameter of the plastic cap (1). The umbrella fabric (3) is sewn with a thread to the plastic strips (2) and glued to the brim of the plastic cap (1) from the underside with a waterproof adhesive (e.g. synthetic glue). This hat- umbrella is placed on the head of a man and should have the brim diameter sufficient to protect a man's head and body from the rain.

---

**(51)** ***A 42 B 1/18*** (2006.01) **(11) 2009/0540**
***A 45 B 11/08*** (2006.01) **(13) A**
(21) P-2009/0540 (22) 10.12.2009.
**(54) ŠEŠIR SUNCOBRAN**
(71) MILIĆEVIĆ, Draško, Ul. Slobode 5/14, 11300 Smederevo, RS
(72) MILIĆEVIĆ, Draško, Ul. Slobode 5/14, 11300 Smederevo, RS
(57) Шешир сунцобран има за новост то што се састоји из обода (1), цилиндричног дела (2) и темене плоче (3). Обод (1) је кружног облика и израђен је од плоче стиропора дебљине 20(мм). Обод (1) у средини има кружни отвор чији је пречник одређен према димензијама главе човека. Спољни пречник обода (1) треба да буде довољно велики да заштити главу и тело

човека од дејства сунчевих зрака. Цилиндрични део (2) је израђен од стиропора и има облик кратке цеви чији пречник одговара пречнику отвора на ободу (1). Цилиндрични део (2) се поставља на обод (1) изнад отвора и помоћу лепка се лепи за њега. Темена плоча (3) је израђена од стиропора и има кружни облик. Њен пречник одговара пречнику цилиндричног дела (2). Темена плоча (3) се поставља одозго на цилиндрични део (2) и лепи се за њега. Тако се добија шешир изграђен од стиропора. Овакац шешир сунцобран се поставља на главу човека и треба да има онолики спољни пречник који је довољан да заштити главу и тело човека од дејства сунчевих зрака.

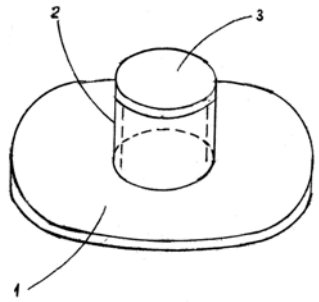


(54) HAT-PARASOL

(57) Invention herewith described refers to the hat-parasol consisting of the brim (1), cylindrical part (2) and the crown (3). The brim (1) is circular and made of a 20 mm thick styrofoam panel. The brim (1) has a circular opening in the middle whose diameter is determined by the dimensions of a man's head. The outer diameter of the brim (1) should be large enough to protect a man's head and body from the effects of sunlight. The cylindrical part (2) is made of styrofoam and has a form of short tube whose diameter corresponds to the diameter of the brim (1) opening. The cylindrical part (2) is set on the brim (1) above the opening and using glue sticks to it. The crown (3) is made of styrofoam and has a circular shape. Its diameter corresponds to the diameter of the cylindrical part (2). The crown (3) is placed from the above on the cylindrical part (2) and glued to it. In this way a hat of styrofoam is created. This hat-parasol is placed on the head of a man and should have the brim diameter sufficient to protect the man's head and body from the effects of sunlight.

---

**(51)** ***A 47 D 1/02*** (2006.01) **(11) 2009/0507**
***A 47 C 4/02*** (2006.01) **(13) A**
***A 47 D 11/00*** (2006.01)
(21) P-2009/0507 (22) 18.11.2009.

**(54) MODULARNI NAMEŠTAJ, NAROČITO NAMENJEN ZA DECU**

(71) SLIJEPČEVIĆ, Anđelka, Bul.Kralja Aleksandra 98/8, 11000 Beograd, RS; PETROVIĆ, Slaviša, Strmova 84, 11565 Baroševac, RS

(72) SLIJEPČEVIĆ, Anđelka, Bul.Kralja Aleksandra 98/8, 11000 Beograd, RS; PETROVIĆ, Slaviša, Strmova 84, 11565 Baroševac, RS

(57) Pronalazak se odnosi na modularni nameštaj, naročito namenjen za decu, kod koga se stolica (1), kao osnovni modul, sastoji od dve vertikalne bočne stranice (2, 3), jedne ledjne stranice (4) i horizontalno postavljenog sedišta (5). U bočnim stranicama (2, 3) izveden je veći centralno postavljen kružni otvor (7) i u odnosu na njega četiri dijametralno postavljena manja otvora (8) za postavljanje bočnih ploča (41), pri čemu su ploče (41) okruglog ili kvadratnog oblika na čijoj se čeonoj površini nalaze izvedena (ugravirana ili ispupčena) slova, brojevi ili slično. Duž čeonih površina u/na stranicama (2, 3) izvedeno je više polukružnih udubljenja (11, 12, 13, 14) i ispupčenja (9, 10) i što su u udubljenjima (14), odnosno otvoru (7) obe stranice (2, 3) postavljeni H elementi (6) za medjusobno vertikalno povezivanje stolica (1). Moduli i elementi modula mogu se izvoditi u različitim dimenzijama i koristiti kao stolice, stolovi, police, kreveti i slično.
Prijava sadrži i varijantu izvodjenja.

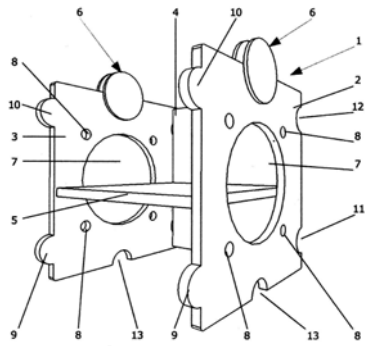


(54) MODULAR FURNITURE ESPECIALLY INTENDED FOR CHILDREN

(57) Invention herewith described refers to the modular furniture, especially intended for children, where the chair (1), as a basic module, consists of two vertical sides (2, 3), one backrest (4) and a horizontally positioned seat (5). In the sides (2, 3) there are made a rather big centrally positioned circular openings (7) and in relation to them four diametrically positioned smaller openings (8) for mounting the side panels (41), whereby plates (41) are the circular or square shaped and on their frontal surface there are (etched or convex) letters, numbers or the like. Along the frontal surface in/on sides (2, 3), there are made several semicircular notches (11, 12, 13, 14) and protrusions (9, 10) and in the notches (14) i.e. in the opening (7) of both sides (2, 3) there are mounted H elements (6) for vertical interconnection of chairs (1). Modules and module elements can be produced in different sizes and used as chairs, tables, shelves, beds and the like.

**(51)** ***A 61 B 5/00*** (2006.01) **(11) 2009/0196**
***A 61 B 5/0245*** (2006.01) **(13) A**
***A 61 B 5/0215*** (2006.01)
(21) P-2009/0196 (22) 24.04.2009.

**(54) INSTRUMENT ZA MERENJE I MONITORING SILA KONTRAKCIJE MUSKULATURE PODA KARLICE**

(71) JEREMIĆ, M. Branislav, dr, Sestre Janjić 6, 34000 Kragujevac, RS; ARSENIJEVIĆ, N. Slobodan. dr, Svetozara Markovića 69, 34000 Kragujevac, RS; TODOROVIĆ, M. Petar, doc. dr., Sestre Janjić 6, 34000 Kragujevac, RS
(72) JEREMIĆ, M. Branislav, dr, Sestre Janjić 6, 34000 Kragujevac, RS; ARSENIJEVIĆ, N. Slobodan. dr, Svetozara Markovića 69, 34000 Kragujevac, RS; TODOROVIĆ, M. Petar, doc. dr, Sestre Janjić 6, 34000 Kragujevac, RS

(57) Инструмент за мерење и мониторинг сила контракције пода карлице. Након пласирања у вагину, силе пода карлице Fp се преко спекулума (1) ручице (5) спекулума и полуге (9) динамометра трансформишу у силу динамометра Fd која се преко завртња (12) преноси на носач (7) мерних трака који је постављен на тело динамометра (6). Деловањем силе динамометра Fd долази до еластичне деформације носача (7) мерних трака (7) а самим тим и мерних трака (8) које су њега постављене и везане у Витстонов мост. Еластичне деформације мерних трака (8) доводи до промене њене електричне отпорности, односно до промене напона на мерној дијагонали Витстоновог моста. На тај начин се сила пода карлице Fpk претвара у електрични сигнал који је могуће лако измерити помоћу мерног инструмента.

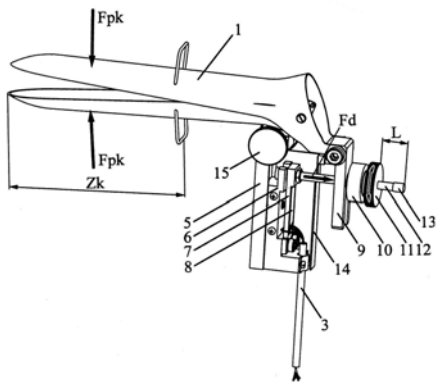


(54) INSTRUMENT FOR MEASURING AND MONITORING THE PELVIC FLOOR MUSCLE FORCE OF CONTRACTION

(57) Invention herewith described refers to the instrument for measuring and monitoring the pelvic floor muscle force of contraction. After placing into the vagina, the pelvic floor forces Fp are through the speculum (1), the speculum handle (5) and dynamometer lever (9) transformed into the dynamometer force Fd that is through the bolt (12) transferred to the measuring tape holder (7) mounted on the body of dynamometer (6). The dynamometer force Fd action causes the elastic deformation of measuring tape holder (7) and consequently of the measuring tapes (8) that are set and linked in the Wheatstone bridge. The elastic deformation of the measuring tapes (8) leads to a change in their electrical resistance, i.e. a change in voltage at the measuring diagonal of the Wheatstone bridge. In this way the force of the pelvic floor FPK is converted into an electrical signal that can be easily measured by using the measuring instrument.

**(51)** ***A 61 B 5/107*** (2006.01) **(11) 2009/0531**
***G 01 B 11/16*** (2006.01) **(13) A**
***A 43 D 1/02*** (2006.01)
(21) P-2009/0531 (22) 04.12.2009.

**(54) NAPRAVA ZA MERENJE VISINE I TEŽINE LJUDI, SA MERENJEM VELIČINE, OBLIKA OTISKA STOPALA I SPUŠTENOSTI SVODA STOPALA**

(71) GRUJIČIĆ, Velimir, Franje Krča 20, 11080 Zemun, RS
(72) GRUJIČIĆ, Velimir, Franje Krča 20, 11080 Zemun, RS
(74) STOJKOVIĆ, Slobodan, Kneginje Zorke 13, 11000 Beograd, RS

(57) Направа за мерење висине и тежине људи са мерењем величине, облика отиска стопала и спуштености свода стопала, према проналаску, се састоји од уређаја и апарата којима се могу добити подаци о целокупном изгледу, држању тела, тежини и висини људске особе, а исто и подаци о изгледу отиска стопала, о величини (дужини и ширини), облику стопала и спуштености свода стопала, а остварена је тако што су у доњем постољу (1) уграђени вага (2), направа (3) за приказивање отисака стопала, док је на једној страни постоља (1) постављена плоча (4) са огледалом (5) на предњој страни, при чему је на једној бочној страни причвршћен рукохват (6) облика издужене плоче (даске) чија је горња страна (61) удаљена тачно 1м од горње површине (11) постоља, док је друга страна рукохвата (6) причвршћена носачем (7) којем је са спољашње стране причвршћена шупља цев (8) тако да јој се ивица (81) горњег отвора налази на висини од 1м од горње површине (9) прозирне плоче (32), а где је унутар шупље цеви (8), клизно по вертикали, улежиштена покретна цев (10) мерача висине, са мерном скалом, које се настављају изнад висине од 1м изнад ивице (81) шупље цеви (8), а која на свом врху нормално на своју осу има учвршћен крак (11) и што је као саставни део направе одвојено остварен мерач стопала (40) који се поставља на горњу површину направе. на прозирну плочу (32), а који омогућава да се на месту постављања направе добију подаци о димензијама стопала.

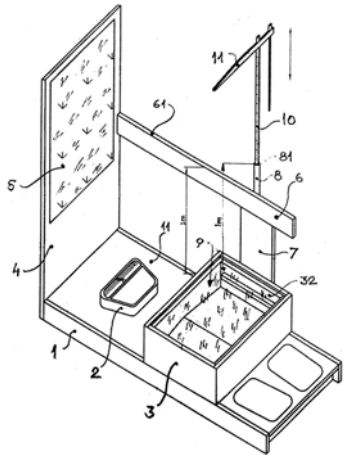


(54) HUMAN HEIGHT AND WEIGHT MEASURING DEVICE WITH MEASUREMENT OF THE FEET SIZE, FOOTPRINT SHAPE AND FEET ARCHES LOWERING

(57) Invention herewith described refers to the human height and weight measuring device with measurement of the feet size, footprint shape and feet arches lowering consisting of devices and appliances that can give data on overall appearance, posture, weight and height of a human being, as well as the data on the footprint appearance, its size (length and width), shape of the foot and the foot arch lowering, and it was accomplished by having in the lower base (1) built-in scale (2), the appliance (3) for footprint displaying, while on the one side of the base (1) there is mounted a plate (4) with a mirror (5) on the front, whereat on one side here is fixed the handrail (6) in the shape of an elongated plate (board) whose upper side (61) is exactly 1 m from the upper surface (11) of the base, while the other side of the handrail (6) is fixed with the bracket (7) to which is from the outside attached a hollow pipe (8) with the edge (81) of the upper opening located at a height of 1 m from the upper surface (9) of the transparent plate (32), and where is, within the hollow pipe (8), sliding vertically, embedded the movable pipe (10) of the height gauge with the measuring scale, which extends beyond the height of 1 m over the edge (81) of the hollow pipe (8), which is on its top perpendicular to its axis has a fixed arm (11) and as an integral part of the device is a separately created foot gauge (40) mounted on the upper surface of the device, on the transparent plate (32), providing the data on the foot size at the place of setting.

**(51)** ***A 61 F 13/66*** (2006.01) **(11) 2010/0500**
**(13) A**
(21) P-2010/0500 (22) 24.12.2008.
(30) MK 12.05.2008. P-2008/141
(86) WO 24.12.2008. PCT/MK2008/000001
(87) WO 19.11.2009. WO 2009/139612
**(54) MENSTRUALNE HIGIJENSKI-PRAKTIČNE GAĆE**

(71) STOJANOVIK, Petkov, Jasna, Trifun Hadzijanev br. 3/14, 1000 Skopje, MK
(72) STOJANOVIK, Petkov, Jasna, Trifun Hadzijanev br. 3/14, 1000 Skopje, MK
(74) VLAHOVIĆ, Slobodan, Radoja Dakića 35/32, 11070 Novi Beograd, RS
(57) Pronalazak menstrualne higijenski-praktične gaćice se sastoji od gaćica koje imaju umetak (1) za higijenske uloške sa krilcima na ivicama, što je prikazano na Slici 1, umetak se sastoji od umetka i dva otvora na umetku (2) prikazanim na slici 1, u otvore se umeću higijenski ulošci sa krilcima na ivicama. Higijenski ulošci sa krilcima na ivicama se spoje na umetak (1) prikazan na slici 1 i efekti krilaca na higijenske ulošce i njihova namena se jačaju preko umetka, dok su estetska svojstva, udobnost i efikasnost gaćica i higijenskih uložaka sa krilcima poboljšani. Sa spojne strane, higijenski ulošci nisu vidljivi jer sti skriveni u umetku i menstrualne higijenski praktične gaćice izgledaju kao što je prikazano na slici broj 2.

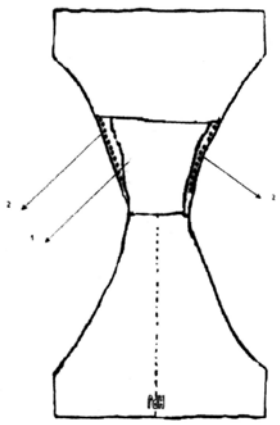

(54) MENSTRUAL HYGIENE-PRACTICAL PANTIES

(57) The invention Menstrual hygiene-practical panties consists of panties that have an insert part (1) for the Sanitary napkins with wings on the edges, that is presented in Picture 1, the insert part consists of an insert part and two openings of the insert part (2) presented in Picture 1, in the openings the Sanitary napkins with wings on the edges are inserted. The Sanitary napkins with wings on the edges are attached on the insert part (1) presented in Picture 1 and the effects of the wings on the sanitary napkins and their purpose is strengthened through the insert part, while the esthetics, the comfort and the efficiency of the panties and the Sanitary napkins with wings are improved. From the outside, the Sanitary napkins are not visible because they are hidden in the insert part and the Menstrual hygiene-practical panties look like shown on picture number 2.

**(51)** ***A 61 K 9/08*** (2006.01) **(11) 2009/0393**
***A 61 K 31/435*** (2006.01) **(13) A**
***A 61 K 31/445*** (2006.01)
(21) P-2009/0393 (22) 04.09.2009.
**(54) STABILNA TEČNA FARMACEUTSKA FORMULACIJA**
(71) GALENIKA A.D., Batajnički drum bb, 11080 Beograd-Zemun, RS
(72) PEŠIĆ, Jelena, Dušana Vukasovića br. 71/67, 11070 Novi Beograd, RS; PAVLOVIĆ, Bojan, Borska 36b, 11000 Beograd, RS; DENIĆ, Tamara, Ilije Đuričića 25a/8, 11000 Beograd, RS; NADOVEZA, Andrijana, XI Krajiške divizije 57/11, 11000 Beograd, RS; SELAKOVIĆ, Brankica, Milice Šuvaković 10/3, 11080 Zemun, RS; SPASIĆ, Aleksandra, Antifašističke borbe 32, 11000 Beograd, RS; DŽELETOVIĆ, Dijamanda, Ilije Stojadinovića 10, 11000 Beograd, RS; VRANIĆ, Valentina, Narodnih heroja br. 16, 11070 Novi Beograd, RS; HOMŠEK, Irena, Vojina Đurašinovića Kostje 27, 11000 Beograd, RS
(57) Ovim pronalaskom se štiti tečni farmaceutski oblik, sirup, kapi za oči ili kapi za nos, sa desloratadinom ili nekim drugim hemijski srodnim tricikličnim antihistaminikom, kao što je loratadin, azatadin ili kombinacijom istih, kao aktivnom komponentom. Novost formulacije zasniva se na formiranju složene strukture, koja nastaje inkorporiranjem lekovite supstance, tricikličnog antihistamina desloratadina (loratadina, azatadina ili njihovu kombinaciju), u specifične strukture, micele, površinski aktivnih materija (PAM). Na ovaj način postignuta je veća rastvorljivost aktivne supstance u vodi i poboljšana njena stabilnost. Istovremeno, smeštanjem aktivne supstance u unutrašnju fazu sistema, u micele, korigovan je njen neprijatan ukus i smanjena mogućnost pojave alergijskih reakcija jer je primenjena PAM zastupljena u niskoj koncentraciji.

(54) STABILE LIQUID PHARMACEUTICAL FORMULATION

(57) Invention herewith described refers to the stabile liquid pharmaceutical formulation and protects the liquid pharmaceutical formulation, syrup, eye drops or nose drops, with desloratadine or other chemically-similar tricyclic antihistamines such as loratadine, azatadine or their combination, as an active component. Novelty in formulation is based on the formation of complex structures, which occur by incorporating medicinal substances of the tricyclic antihistamine - desloratadine (loratadine, azatadine or a combination thereof) into specific structures, micelles, surface active material (SAM). In this way is achieved a higher water solubility of the active ingredient and improved its stability. At the same time, by placing the active ingredient in the internal phase of the system, into micelles, its unpleasant taste is corrected and the risks of allergic reactions is reduced because the applied surface active material SAM is present in low concentrations.

**(51)** ***A 61 K 39/395*** (2006.01) **(11) 2010/0555**
***C 07 K 16/22*** (2006.01) **(13) A**
***G 01 N 33/53*** (2006.01)
***C 12 N 15/68*** (2006.01)
***C 12 N 5/10*** (2006.01)
***A 61 P 25/00*** (2006.01)
***A 61 P 35/00*** (2006.01)
(21) P-2010/0555 (22) 15.07.2004.
(62) P-2006/0022
(30) US 15.07.2003. 60/487, 431
**(54) HUMANA ANTI-NGF NEUTRALIŠUĆA ANTITELA KAO SELEKTIVNI INHIBITORI NGF SIGNALNOG PUTA**
(71) AMGEN INC., One Amgen Center Drive, Thousand Oaks, CA 91320-1799, US; MEDAREX INC., Rt.206 & Province Line Road, Princeton, New Jersey, 08540, US
(72) WILD, Kenneth, D., 1604 Meander Drive, 93065 Simi Valley, US; TREANOR, James, J., S., 13555 Contour Drive, Sherman Oaks, CA 91423, US; HUANG, Haichun, 2425 Sueno Way, Fremont, CA 94539, US; INOUE, Heather, 675 Oak Run Trail No. 107, Oak Park, CA 91377, US; ZHANG, Tie, J., 5077 Via Camino, Thousand Oaks, CA 91320, US; MARTIN, Frank, 865 Fernhill Court, Newbury Park, CA 91320, US
(74) RISTIĆ, Dragoslav i ost., Cara Lazara 7, 11000 Beograd, RS
(57) Predmetni pronalazak se odnosi na izolovani molekul nukleinske kiseline koji sadrži: Sekv. sa ID br: 9; Sekv. sa ID br: 11; Sekv. sa ID br: 21, sekv. sa ID br: 17 i sekv. sa ID br: 13; ili Sekv. sa ID br: 23, sekv. sa ID br: 19 i sekv. sa ID br: 15. Takođe predmetni pronalazak se odnosi i na izolovanu ćeliju - domaćin koja sadrži pomenutu nukleinsku kiselinu, antitelo ili antigen vezujući fragment takvog antitela koje se vezuje za faktor rasta nerava (NGF), farmaceutski preparat koji sadrži farmaceutski prihvatljiv nosilac i takvo izolovano antitelo.

(54) HUMAN ANTI-NGF NEUTRALIZING ANTIBODIES AS SELECTIVE NGF PATHWAY INHIBITORS

(57) Invention herewith described refers to the isolated nucleic acid molecule that contains: Seq. ID No: 9; Seq. ID No: 11; Seq. ID No: 21, Seq. ID No: 17 and Seq. ID No: 13; or Seq. ID No: 23, Seq. ID No: 19 and Seq. ID No: 15. The subject invention also refers to an isolated host cell containing such a nucleic acid, antibody or antigen binding the fragment of such antibody that binds to the nerve growth factor (NGF), the pharmaceutical preparation containing pharmaceutically acceptable carrier and such an isolated antibody.

**(51)** ***A 61 K 39/395*** (2006.01) **(11) 2011/0024**
***C 07 K 16/00*** (2006.01) **(13) A**
***C 07 K 16/18*** (2006.01)
***C 07 K 16/30*** (2006.01)
***C 07 K 16/46*** (2006.01)
(21) P-2011/0024 (22) 17.04.2002.
(62) P-2003/0849
(30) US 26.04.2001. 60/286, 782
US 17.05.2001. 60/293, 020
US 26.06.2001. 60/301, 091
US 22.03.2002. 60/367, 002

**(54) ANTITELA KOJA BLOKIRAJU CRIPTO I NJIHOVA UPOTREBA**

(71) BIOGEN IDEC MA INC., 14 Cambridge Center, Cambridge, Massachusetts 02142, US
(72) SANICOLA-NADEL, Michele, 4 Maple Road, 02142 Winchester, MA, US; WILLIAMS, Kevin, 7 Malden Street, Natick, MA 01760, US; SCHIFFER, Susan, 6 Moreland Avenue, Lexington, MA 02421, US; RAYHORN, Paul, 48 Mirimichi Road, Foxborough, MA 02035, US
(74) RISTIĆ, Dragoslav i ost., Cara Lazara 7, 11000 Beograd, RS
(57) Predmetni pronalazak se odnosi na antitelo koje se specifično vezuje za epitop u domenu Cripto bogatom cisteinom, koji se prostire od aminokiseline u položaju 114 do aminokiseline u položaju 150 u sekvenci čiji je ID broj 1 ili sekvenci čiji je ID broj 2. Pronalazak se takođe odnosi i na farmaceutski preparat koji sadrži najmanje jedno od antitela i nosač. Dalje, odnosi se i na upotrebu predmetnog antitela ili preparata za smanjenje rasta tumora in vitro, kao i za proizvodnju medikamenta za smanjenje rasta tumora in vivo. Na kraju, pronalazak se odnosi i na postupak za modulisanje rasta ćelija tumora in vitro u uzorku, koji podrazumeva korak dodavanja predmetnog antitela ili preparata datom uzorku.

(54) CRYPTO BLOCKING ANTIBODIES AND THEIR USE

(57) Invention herewith described refers to the crypto blocking antibodies and their use i.e. to the antibody which is specifically bound to the epitope in the Cripto cysteine-rich domain, which extends from the amino acid position 114 to position 150 in the amino acid sequence whose ID number is 2. The invention also relates to the pharmaceutical preparation containing at least one of the antibodies and the carrier. Further on, it also refers to the use of the subject antibody or the preparation for the reduction of tumour growth in vitro, and to the production of drugs for tumour growth reduction in vivo. Finally, the invention relates to a process for modulating the growth of tumour cells in vitro in the sample, which involves adding the subject antibody or the preparation to the given sample.

**(51)** ***A 61 M 5/34*** (2006.01) **(11) 2010/0354**
***A 61 M 5/178*** (2006.01) **(13) A**
***A 61 M 5/50*** (2006.01)
(21) P-2010/0354 (22) 06.02.2009.
(30) US 13.02.2008. 12/030, 637
(86) WO 06.02.2009. PCT/US2009/033304
(87) WO 20.08.2009. WO 2009/102624

**(54) ŠPRIC SA PROBUŠENIM VRHOM I ZAŠTITNIM DELOM KOJI SE KORISTI ZA ČEONE DODATKE**

(71) RETRACTABLE TEHCNOLOGIES, INC., 511 Lobo Lane, Little Elm, TX 75068-0009, US
(72) SHAW, Thomas, J., 5310 Buena Vista, Frisco, TX 75034, US; ZHU, Ni, 4408 Brigade Ct., Plano, TX 75024, US; WOOD, Gary, 20034 SaratogaTrail, Fisco, TX 75034, US
(74) PETOŠEVIĆ, Dušan, Kozjačka 15, 11000 Beograd, RS
(57) Medicinska oprema sa prednjim dodatkom za povezivanje, špric koji sadrži ispust za tečnost sa prednje strane i zaštitni deo sa prednje strane koji se prostire preko ispusta da bi zaštitio ispust za tečnost od patogene kontaminacije prilikom kontakta pre povezivanje čeonog dodatka.

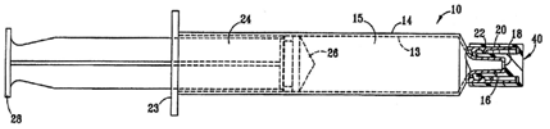


(54) SYRINGE WITH RECESSED NOSE AND PROTECTIVE GUARD FOR USE WITH FRONTAL ATTACHMENTS

(57) A medical device connectable to a frontal attachment, the syringe having a forwardly projecting fluid outlet member and a forwardly projecting protective guard extending beyond the outlet member to protect the outlet member from pathogenic contamination by contact prior to connection to the frontal attachment.

**(51)** ***A 62 C 27/00*** (2006.01) **(11) 2009/0416**
**(13) A**
(21) P-2009/0416 (22) 29.09.2009.

**(54) VATROGASNO VOZILO SPECIJALNE NAMENE NA OSNOVI TENKA T-55**

(71) VOJNOTEHNIČKI INSTITUT, Ratka Resanovića 1, 11030 Beograd, RS
(72) PANTIĆ, Mladen, prof.dr., Lipa 20, 11000 Beograd, RS; TAJEVIĆ, Milenko, Poručnika Spasića i Mašere 96, 11000 Beograd, RS; JANKOVIĆ, Goran, Vršačka 12, 26000 Pančevo, RS

(57) Основу ватрогасног возила VV-55 представља оклопно тело тенка Т-55, које својом масивном конструкцијом чини стабилну платформу са уграђеним резервоарима за воду (7), као и специјалном ватрогасном опремом. Возило је опремљено бацачем (4), који је намењен за усмеравање средстава за гашење у виду компактног или распршеног млаза. Руковање ватрогасним уређајем -бацачем је даљинско, из унутрашњости возила. Оператор прати усмереност млаза и сагледава ситуацију на терену помоћу уграђене камере (10). На бочној страни VV-55 се за напајање навалне групе која наступа поред возила уграђују витла високог притиска, као и потисни излази (3). Возило је опремљено снажном ралицом (2), која омогућава уклањање постојећих жаришта, горућих препрека као и застирање земље у циљу гашења пожара и пресецања пожарних зона, тако да ово возило обједињује ватрогасно возило и будлозер за санирање угрожених терена. Ватрогасно возило VV-55 у простору за посаду има уграђен филтро-вентилациони уређај са пречистачем нове генерације који омогућава коришћење возила у јако загађеним срединама (штетни гасови, дим). Ватрогасно возило је опремљено системом за самозаштиту од прегревања (6), који се састоји од цевовода и млазница које се налазе распоређене дуж целог возила и по потреби врше хлађење целе конструкције возила.

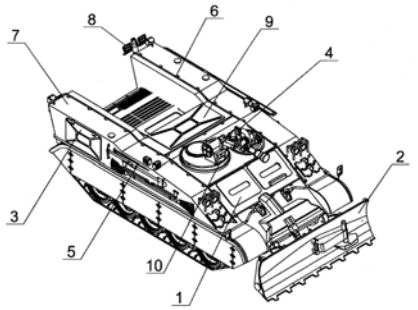


(54) SPECIAL PURPOSE FIRE TRUCK ON THE BASE OF THE T-55 TANK

(57) Invention herewith described refers to the special purpose fire truck on the base of the t-55 tank. The base of the fire truck VV-55 is the armoured body of the T-55 battle tank, that with its massive frame makes a stable platform with built-in water tanks (7), and special fire-fighting equipment. The vehicle is equipped with a thrower (4) designed to direct the extinguishing agents in the form of full or spray jet. Handling the fire-extinguishing device - thrower is a remote one, from inside the vehicle. The operator follows the orientation of the jet and controls the situation on the ground by using a built-in camera (10). On the side of the VV-55 for supply of the forward group that goes beside the vehicle, there are mounted high pressure winches as well as thrust outlets (3). The vehicle is equipped with a powerful snow plough (2), which allows the removal of existing focal points, burning obstacles and throwing the soil for the purpose of fire extinguishing and the fire zone interception, so that this vehicle combines the fire truck and bulldozer for recovery of endangered areas. The fire truck VV-55 in the space for the crew has a built-in filter-ventilation unit with a new generation cleaner that allows the use of the vehicle in heavily polluted areas (harmful gases, smoke). The fire truck is equipped with a system for self-protection against overheating (6) consisting of piping and nozzles arranged along the entire vehicle and if necessary provide the cooling of the whole vehicle structure.

---

**(51)** ***B 01 D 21/01*** (2006.01) **(11) 2010/0438**
**(13) A**
(21) P-2010/0438 (22) 11.03.2009.
(30) CL 24.12.2008. 3900-2008
(86) 11.03.2009. PCT/US2009/036809
(87) 01.07.2010. WO 2010/074770
**(54) EFIKASAN POSTUPAK FILTRIRANJA VODE U REZERVOARU ZA REKREACIONE ILI DEKORATIVNE NAMENE GDE SE VRŠI FILTRIRANJE SAMO MALE KOLIČINE VODE A NE CELOKUPNE VODE IZ REZERVOARA**
(71) CRYSTAL LAGOONS CORPORATION LLC, 16192 Coastal Highway, Lewes, DE 19958-9776, US
(72) FISCHMANN TORES, Fernando, Benjamin, Avda. Kennedy 8830, Las Condes, Santiago, CL
(74) PETOŠEVIĆ DOO, Vele Nigrinove 16A, 11000 Beograd, RS
(57) Efikasan postupak filtriranja vode u rezervoaru za rekreacione ili dekorativne namene gde se vrši filtriranje samo male količine vode a ne celokupne vode iz rezervoara obuhvata sledeće korake: (a) emitovanje ultrazvučnih talasa u rezervoar; (b) dodavanje sredstva za flokulaciju u vodu; (c) pokrivanje dna rezervoara uređajem za usisavanje koji usisava vodu sa flokulisanim česticama i ispušta je u liniju za sakupljanje efluenta; (d) filtriranje izlaznog protoka iz rečene linije za sakupljanje efluenta, i (f) vraćanje filtriranog protoka u rezervoar. Ovaj izum dodatno sadrži usisni uređaj koji se koristi u rečenom postupku filtriranja efluenta.

(54) EFFICIENT FILTRATION PROCESS OF WATER IN A TANK FOR RECREATIONAL AND ORNAMENTAL USES, WHERE THE FILTRATION IS PERFORMED OVER A SMALL VOLUME OF WATER AND NOT OVER THE TOTALITY OF THE WATER FROM THE TANK

(57) The present invention comprises an efficient filtration process of water from a tank, where the filtration is performed over a small volume of water and not on the totality of the water from the tank; the process comprises the following steps: (a) emitting ultrasonic

waves in the tank; (b) adding a flocculant agent to the water; (c) covering the tank bottom with a suctioning device which suctions a water flow with flocculated particles, discharging to a collecting effluent line; (d) filtering the effluent flow of the suctioning device from said collecting effluent line; and (e) returning the filtered flow to the tank. The present invention additionally comprises a suctioning device used in said efficient filtration process.

**(51)** ***B 01 D 47/02*** (2006.01) **(11) 2009/0072**
**(13) A**
(21) P-2009/0072 (22) 13.02.2009.
**(54) TEČNI FILTER ZA DIMNJAKE**
(71) RADOVANOVIĆ, Tomislav, Vojvode Petra Bojovića 3, 34000 Kragujevac, RS
(72) RADOVANOVIĆ, Tomislav, Vojvode Petra Bojovića 3, 34000 Kragujevac, RS
(57) Течни филтер за димњаке решава проблем пречишћавања гасова и смога, одвајањем непожељних честица из неког простора у коме се стварају, применом одговарајуће течности која непожељне честице раствара, хемијски разлаже или их испира. Суштина конструкције је простор (14) обезбеђен са отворима (13) за спровођење гаса у цеви (7) које су повезане са доњом комором (15) на којој су изведени отвори преко којих гас долази у контакт са честицама течности која се налази у течном купатилу (6). Ово кретање гаса кроз систем за филтровање омогућава вентилатор (10), док се славине (5, 8) користе при промени течности у течном купатилу (6). При протоку гаса у процесу филтрирања стварају се хемијске супстанце, па је неопходно да елементи конструкције (течно купатило, цеви за довод гаса и доња комора гаса) буду од материјала отпорних на високе температуре и хемијске супстанце.

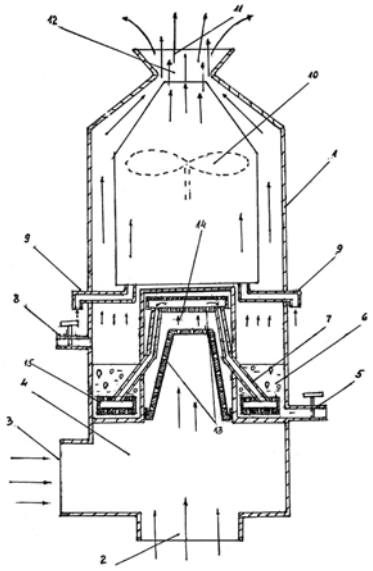

(54) LIQUID FILTER FOR CHIMNEYS

(57) Invention herewith described refers to the liquid filter for chimneys that solves the problem of gas and smog purification by separation of unwanted particles from an area in which they develop, by using the appropriate liquid for dissolving the unwanted particles, chemically breaking down or rinsing. The essence of the design is the space (14) provided with openings (13) for the gas flow through the pipes (7) that are connected with the lower chamber (15) with the openings through which the gas comes into contact with liquid particles from the liquid bath (6). This gas flow through the filtration system is allowed by a fan (10), while the cocks (5, 8) are used when changing fluids in the liquid bath (6). At the gas flow in the process of filtering, the chemical substances are created and it is necessary that the design elements (liquid bath, gas supply pipes and the gas lower chamber) are made from materials resistant to high temperatures and chemicals.

**(51)** ***B 01 J 3/00*** (2006.01) **(11) 2010/0167**
***B 01 J 3/03*** (2006.01) **(13) A**
***C 23 C 14/54*** (2006.01)
***C 23 C 14/56*** (2006.01)
***B 01 J 19/22*** (2006.01)
(21) P-2010/0167 (22) 11.10.2008.
(30) DE 17.10.2007. 102007049669.0
(86) WO 11.10.2008. PCT/EP2008/010773
(87) WO 23.04.2009. WO 2009/049921
**(54) SISTEM PROPUSNIH BRANA I POSTUPAK ZA OTVARANJE SISTEMA PROPUSNIH BRANA**
(71) SMS SIEMAG AG, Eduard-Schloemann-Strasse 4, 40237 Düsseldorf, DE
(72) BEHRENS, Holger, Neuenhausstrasse 44, 40699 Erkrath, DE; SOHL, Ralf-Hartmut, Badstrasse 75, 42699 Solingen, DE; KÜMMEL, Lutz, Am Jüchener Bach 23, 41363 Jüchen, DE
(74) JANKOVIĆ, D. Ivan i ost., Vlajkovićeva 28, 11000 Beograd, RS
(57) Sistem propusnih brana i postupak za otvaranje sistema propusnih brana se odnosi na sistem propusnih brana (10,10') sa najmanje jednom branom (11) za prolazak trakastog materijala. Da bi se propusna brana, naročito pojedinačne brane, mogle servisirati ili opravljati, a da se trakasti materijal ne mora vaditi, prema predmetnom pronalasku se predlaže, da se pojedinačna brana sastoji minimum od jednog prvog i jednog drugog dela, pri čemu su oba dela demontažno pričvršćena jedan za drugi, kako bi se pojedinačna brana mogla otvarati i zatvarati i pri čemu je predvidjen najmanje jedan sklop (24, 25), koji omogućava, kad je spoj otvoren, pomeranje ili klizanje prvog i drugog dela pojedinačne brane jedan u odnosu na drugi u smeru ili u suprotnom pravcu transporta trakastog materijala (2).

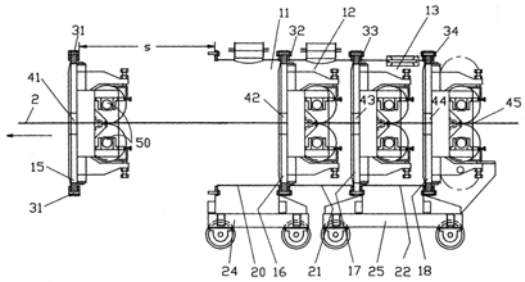


(54) LOCK DEVICE AND METHOD FOR OPENING THE LOCK DEVICE

(57) The invention relates to a lock device (10,10') having at least one individual lock (11) for the insertion of strip material (2). In order to be able to maintain or repair the lock device, particularly the individual locks thereof, without needing to remove strip material (2) from the lock device, the invention proposes that the individual lock be made of at least one first and one second part, wherein the two parts are connected to one another via a releasable connection in order to open and close the individual lock, and for at least one device (24, 25) to be provided for moving or displacing the first and second part of the individual lock relative to one another in or opposite the transport direction of the strip material (2) when the connection is open.

**(51)** ***B 21 B 15/00*** (2006.01) **(11) 2010/0242**
***B 23 K 37/04*** (2006.01) **(13) A**
(21) P-2010/0242 (22) 03.12.2008.
(30) DE 05.12.2007. 102007058840.4
DE 06.05.2008. 102008022269.0
(86) WO 03.12.2008. PCT/EP2008/010213
(87) WO 11.06.2009. WO 2009/071268
**(54) UREĐAJ I POSTUPAK ZA SPAJANJE TRAKA**
(71) SMS SIEMAG AG, Eduard-Schloemann-Strasse 4, 40237 Düsseldorf, DE
(72) BEHRENS, Holger, Neuenhausstrasse 44, 40699 Erkrath, DE; BERG, Robert, Zanderweg 7, 40764 Langenfeld, DE; KÜMMEL, Lutz, Am Jüchener Bach 23, 41363 Jüchen, DE; BENDLER, Manuel, Markgrafenstrasse 13, 40545 Duesseldorf, DE; SOHL, Ralf-Hartmut, Badstrasse 75, 42699 Solingen, DE; DE KOCK, Peter, Storpskamp 29, 46117 Oberhausen, DE; TOMZIG, Michael, Sindlinger Str.54, 65796 Hattersheim, DE
(74) JANKOVIĆ, D. Ivan i ost., Vlajkovićeva 28, 11000 Beograd, RS
(57) Pronalazak se odnosi na uredjaj (100) za spajanje traka u beskrajnu traku sa sklopovima za stezanje traka (100, 120), sa stegom na ulaznoj strani (110 -r, 120 -r) i stegom na izlaznoj strani (110-1, 120 -1), sa sklopom za rezanje (155) sa jednim gornjim nožem (150) i jednim donjim nožem (130) i sklopom za spajanje, naznačen time, stoje bar ulazni stezni sklop (110 -r, 120 -r) i/ili izlazni stezni sklop (110 -1, 120 -1), izveden kao predmontirana celina.

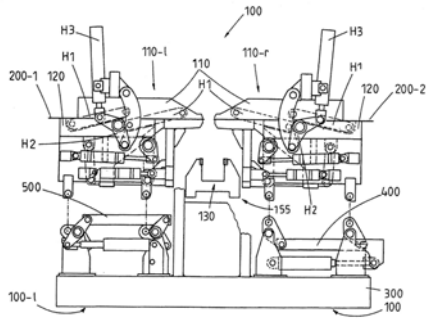


(54) DEVICE AND METHOD FOR CONNECTING RIBBONS

(57) The invention relates to a device (100) for connecting ribbons into a continuous ribbon with a clamping unit (110, 120) having a clamping device (110-r, 120-r)on the inlet side and a clamping device (110-I, 120-I) on the outlet side, a cutting device (155) having an upper knife (15) and a lower knife (13) and a joining device, wherein at least the clamping device (110-r, 120-r) on the inlet side and/or the clamping device (110-I, 120-I) on the outlet side is designed as unit that can be pre-assembled.

**(51)** ***B 42 D 15/10*** (2006.01) **(11) 2009/0464**
**(13) A**
(21) P-2009/0464 (22) 26.10.2009.
**(54) POSTUPAK IZRADE UMETKA SA ČIPOM ZA IDENTIFIKACIONA DOKUMENTA**
(71) NBS-ZAVOD ZA IZRADU NOVČANICA I KOVANOG NOVCA-TOPČIDER, Pionirska 2, 11030 Beograd, RS
(72) DRAGOVIĆ, Tomislav, dipl. maš. inž., Narodnih heroja 28, 11070 Novi Beograd, RS
(57) Уметак са чипом документа за идентификацију са поступком израде. Уметак са чипом документа за идентификацију настаје када се поступком механичке обраде на пластичном носачу (1), у чијем средишту се налази РФИД уложак (5), оивичи простор (1а) у који се постављају папирни део (2) и полимерни инјекциони отпресак (3) који се дејством ултразвука на додирним површинама нераскидиво спаја са носачем (1) и папирним делом (2). Пластични носач (1), у чијем средишту се налази РФИД уложак (5), добија се дифузионим спајањем када контролисаним поступком термотрансфера топлоте и употребом специјалних радних плоча добија нерскидива веза у виду ламината на коме су утиснути одређени заштитни елементи.

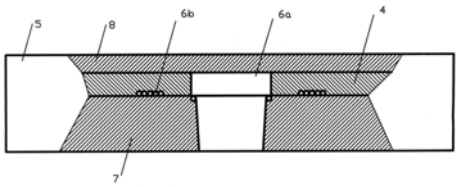

(54) CREATION PROCEDURE OF CHIP INLAY FOR IDENTIFICATION DOCUMENTS

(57) Invention herewith described refers to the inlay with chip for identification with the creation procedure. Inlay with the chip for an identification document is created when by the process of mechanical treatment on the plastic medium (1), in the centre of which is placed the RFID device (5), is edged an area (la) in which are put the paper part (2) and the polymer injection moulded part (3 ) and by by the action of ultrasound their contact surfaces are inextricably connected with the medium (1) and the paper part (2). The plastic medium (1), with the RFID device (5) in the centre is acquired by the diffusion merging when, by the controlled thermal transfer process of heat and use of special working plates, the inextricable connection in the form of laminate with embedded certain protective elements is achieved.

**(51)** ***B 60 K 6/00*** (2007.10) **(11) 2009/0453**
***B 60 W 20/00*** (2006.01) **(13) A**
(21) P-2009/0453 (22) 20.10.2009.
**(54) POGONSKI SISTEM**
(71) PAUNOVIĆ, Nenad, Čačanska bb, D. Vrežina, Niš, RS
(72) PAUNOVIĆ, Nenad, Čačanska bb, D. Vrežina, Niš, RS
(57) Погонски систем је нов концепт погонског система који функционише тако што комбинује ракетни односно млазни мотор(е) (2) са електромагнетним моторима (19) са могућношћу самодопуне уређаја (9) за складиштење електричне енергије конверзијом кинетичке енергије флуида која настаје услед термодинамичке разлике стања фулуида изван погонског система (и возила (26)) и флуида унутар погонског система као и међусобне разлике у притисцима. Конверзија се врши уз помоћ уређаја (1) за конверзију кинетичке енергије флуида у електричну енергију одакле се проводницима (7) одоводи до уређаја (9) за складиштење, расподелу и обраду електричне енергије. Уз помоћ централног кнотрлоног уређаја (23) синхронизује се рад целог погонског система.

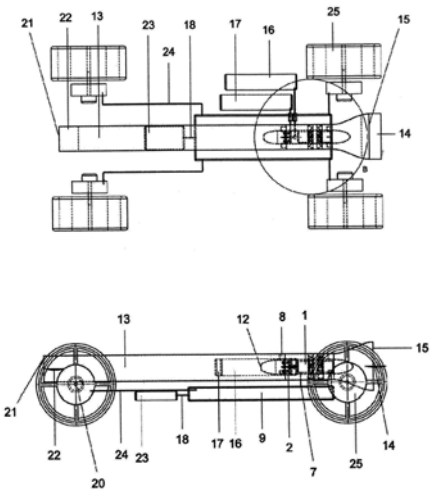


(54) DRIVING SYSTEM

(57) Invention herewith described refers to the driving system that represents a new concept of driving system which operates by combining a rocket i.e. jet engine(s) (2) with electromagnetic motors (19) with the possibility for auto complete of the device (9) for the electrical energy storing by conversion of the fluid kinetic energy resulting from the thermodynamic difference of the fluid state outside the driving system (and the vehicle (26)) and the fluid within the driving system as well as mutual differences in pressure. The conversion is accomplished with the device (1) for conversion of fluid kinetic energy into electrical energy that is transferred through the conducting electric wires (7) to the device (9) for storage, processing and distribution of electricity. The central control device (23) synchronizes the operation of the entire driving system.

**(51)** ***B 60 L 9/02*** (2006.01) **(11) 2009/0560**
***B 60 L 11/00*** (2006.01) **(13) A**
(21) P-2009/0560 (22) 24.12.2009.
**(54) SET KOMPONENTI ZA ELEKTRIČNO VOZILO NA POZNATOJ PLATFORMI**
(71) UDRUŽENJE TIM EKSPERATA ZASTAVE KRAGUJEVAC, Dr Zorana Đinđića 10/7, 34000 Kragujevac, RS
(72) ne želi da bude naveden
(57) Предложен је концепт (поступак) израде електровозила коришћењем ресурса платформи возила у серијској производњи са погоном моторима СУС. Дефинисан је сет неопходних делова (сет компоненти) за такву трансформацију, који чине: електромотор једносмерне струје (1), контролер електромотора (2), педала гаса (4), погонске Литијум-јонске батерије (5), пуњач батерија (8) и систем надгледања и контроле батерија са модулима за мерење струје, напона и температуре батерија (6), (7). На овај начин се редукује ниво потребних трошкова за развој и израду возила на електро погон. Са подизањем масовности популације возила са електричним погоном на тржишту, напредоваће и кључне технологије, првенствено за израду батерија, и сам производ, реализован овим концептом, уз већ доказане еколошке и енергетске предности, побољшаће перформансе и достићи нижу, конкурентну цену. У интересу заштите човекове околине и рационалног коришћења енергије (и стим повезаног смањења ефекта стаклене баште), путничко возило на електрични погон, према свим билансима, представља најбоље решење. Данашњи хибридни погони са електро погоном и мотором СУС су само прелазна решења ка чистом електричном погону. Развијене технологије већ данас омогућују већу масовност примене електро погона.

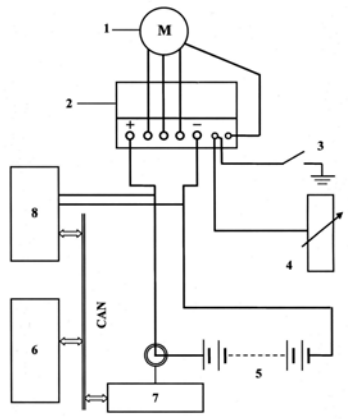


(54) SET OF COMPONENTS FOR ELECTRIC VEHICLE ON THE KNOWN PLATFORM

(57) Invention herewith described refers to the concept of the electric vehicle production using the vehicle platforms that are already in serial production and powered by internal combustion engines (ICE). A set of necessary components (a set of components) defined for such a transformation, includes: the electric DC motor (1), the electric DC motor controller (2), accelerator pedal (4), power lithium-ion batteries (5), battery charger (8) and monitoring and battery control system with modules for current, voltage and temperature of the batteries (6), (7) measurement. This reduces expenditure needed for the development and production of electric vehicles. With the growing mass of electric vehicles on the market, the key technologies will also make progress, primarily for the production of batteries, and the product realized according to this concept, in addition to already proven environmental and energy benefits, will improve performances and achieve a lower, competitive price. In the interest of environmental protection and rational use of energy (and associated reduction of greenhouse effect), the passenger electric vehicle, by all accounts, is the best solution. Today's hybrid drives with the electric drive and the internal combustion engine (ICE) are only an interim solution to the pure electric drive. Nowadays, advanced technologies already allow greater use of electric drives.

**(51)** ***B 60 L 11/18*** (2006.01) **(11) 2009/0473**
**(13) A**
(21) P-2009/0473 (22) 30.10.2009.
**(54) MALI ELEKTRIČNI AUTOMOBIL**
(71) VUKIĆEVIĆ, Živojin, Južni Bulevar 36, 11000 Beograd, RS; VUKIĆEVIĆ, Slavka, Južni bulevar 36, 11000 Beograd, RS; BURNS-BENIĆ, Olivera, Južni Bulevar 36, 11000 Beograd, RS; BURNS-BENIĆ, Ema, Južni Bulevar 36, 11000 Beograd, RS
(72) VUKIĆEVIĆ, Živojin, Južni Bulevar 36, 11000 Beograd, RS; VUKIĆEVIĆ, Slavka, Južni bulevar 36, 11000 Beograd, RS; BURNS-BENIĆ, Olivera, Južni Bulevar 36, 11000 Beograd, RS; BURNS-BENIĆ, Ema, Južni Bulevar 36, 11000 Beograd, RS
(74) KOJOVIĆ, Aleksandar, Kneza Višeslava 11, 11000 Beograd, RS
(57) Mali električni automobil kao jedna jedinstvena celina ima dva sedišta i sa njime, se prevoze ljudi, stvari i roba isto kao i sa svakim putničkim automobilom koji ima dva sedišta. Mali električni automobil ima prednje sedište (2) iza volana (5) je za vozača a zadnje sedište (3) je iza prednjeg sedišta (2) i ovo zadnje sedište (3) je za drugu osobu, stvari ili robu i zato mali električni automobil može da se kreće i biciklističkom stazom i na mesta na kojima nije dozvoljen saobraćaj drugim vozilima pa je pogodan za šoping, posete, za raznošenje robe i pošte. Mali električni automobil ima dva sedišta prednje sedište (2) je iza volana (5) i zadnje sedište (3) je iza prednjeg sedišta (2) i oba ova sedišta prednje sedište (2) i zadnje sedište (3) pričvršćena su na jednom patosu (1) koji je jedna celina tako da je mali električni automobil jedna jedinstvena celina sa dva sedišta. Medjutim, zadnje sedište (3) može da se proizvodi zasebno odvojeno od prednjeg sedišta (2) sa svojim podešenim patosom (1) na kome je zadnje sedište (3) pričvršćeno i patos (1) leži na dva točka na levom točku (7) i na desnom točku ($7^1$) i zato je ovako proizveden zadnji deo sa zadnjim se dištem (3)suština pronalaska jer je odvojena zasebna celina i kada se sa svojim prednjim delom (11) spoji sa električnim invalidskim kolicima koja imaju samo jedno sedište ili sa bilo kojim električnim kolicima koja imaju samo jednoj sedište postaje električno vozilo sa dva sedišta. Mali električni automobil, umesto dva prednja točka, samo jedan prednji točak (6) sa kojim se jednostavno upravlja volanom (5) isto kao sa biciklom ili motociklom a to pojeftinjuje cenu celog vozila jer se kupuje jedan kompletan prednji točak manje i ne kupuju, se delovi i sistem za upravljanje koji su neophodni kada su napred dva prednja točka i mali električni automobil ima i na sredini dva srednja točka srednji levi točak (8) i srednji desni točak ($8^1$) i na kraju ima i dva zadnja točka zadnji levi točak (7) i zadnji desni točak ($7^1$) i oba zadnja točka (7) i ($7^1$) mogu biti i rotacioni da se okreću u raznim pravcima i više desetina kilometara.

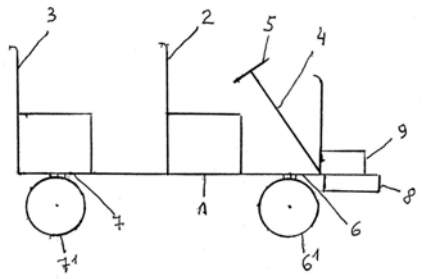

(54) SMALL ELECTRIC CAR

(57) Invention herewith described refers to the small electric car that as a single entity has two seats and with them are transported people, goods and commodities same as with any passenger car with two seats. The small electric car has a front seat (2) behind the wheel (5) for driver and a rear seat (3) behind the front seat (2) is for another person, commodities or goods and because of the fact that the small electric car can be driven on the bicycle path and in places where other traffic cannot it is suitable for shopping, visiting, for goods and mail delivery. The small electric car has two seats - the front seat (2) is behind the wheel (5) and the rear seat (3) is behind the front seat (2) and both these seats (the front seat (2) and the rear seat (3)) are mounted on one floor (1), which makes one unit so that the small electric car is a single entity with two seats. However, the rear seat (3) can be produced separately, apart from the front seat (2) with its adjusted floor (1) that the rear seat (3) is attached to and the floor (1) lies on two wheels - on the left wheel (7) and on the right wheel ($7^1$) and that is why the rear part with the rear seat (3) produced as a separate entity, is the essence of this invention because when it is with its front (11) attached to an electric wheelchair, which has only one seat or to any electric cart with only one seat, it becomes an electric vehicle with two seats. The small electric car instead of two front wheels has only one front wheel (6), which is easy to operate by the steering wheel (5) the same as a bicycle or a motorcycle and it reduces costs of the entire vehicle because a complete front wheel does not have to be bought as well as the parts and less and do not buy it parts and control system necessary when there are two front wheels and the small electric car has two middle wheels in the middle - the left middle wheel (8) and the right middle wheel ($8^1$) and at the rear part there are two rear wheels – the rear left wheel (7) and the rear right wheel ($7^1$) and both rear wheels (7) and ($7^1$) can rotate in different directions.

**(51)** ***B 65 F 1/06*** (2006.01) **(11) 2010/0174**
**(13) A**
(21) P-2010/0174 (22) 15.04.2010.
**(54) PODZEMNI KONTEJNER ZA SMEĆE**
(71) KORALI D.O.O., Konarevo br. 206, 36000 Kraljevo, RS
(72) ROGLIĆ, Dušanka, Konarevo br. 206, 36000 Kraljevo, RS
(57) Podzemni kontejner za smeće obuhvata plastični rezervoar (l) za smeće koji je sa dve trećine svoje dužine postavljen u rupu (7) u zemlji. Na vrhu rupe (7) je oko plastičnog rezervoara (l) postavljen betonski podmetač (2). Na betonski podmetač (2) je postavljeno osmougaono kućište (3). Na gornji deo osmougaonog kućišta (3) je postavljen poklopac (4) na čijoj je gornjoj strani obrtno učvršćen poklopac (5) za ubacivanje smeća. Takođe na poklopcu (4) su učvršćene ušice (10) za podizanje poklopca (4) na čiji je noseći lim (11) sa kukama (9) nakačena vreća (6) za smeće tako da vreća (6) za smeće ulazi u plastični rezervoar (l) i doseže do njegovog dna. Vreća (6) za smeće na donjem obodu ima učvršćene metalne vodice (6.4) kroz koje se provlači uže (6.6) koje se zateže i zatvara dno vreće (6) za smeće. Pražnjenje vreće (6) obavlja se komunalnim vozilom sa kukom koja se kači za ušice (10) i podiže poklopac (4) sa vrećom (6) odvezuje uže (6.6) i ispušta smeće u vozilo. Kada se vreća (6) isprazni ponovo se veže uže (6.6) i vreća (6) vraća u plastični rezervoar (l) tako da poklopac (4) legne na oslonac (3.3) poklopca na osmougaonom kućištu (3). Postoji još jedna varijanta izvođenja podzemnog kontejnera za smeće sa limenim kontejnerom (60) umesto vreće (6) za smeće.

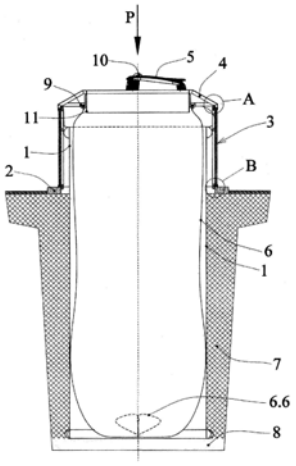


(54) UNDERGROUND WASTE CONTAINER

(57) Invention herewith described refers to the underground waste container consisting of a plastic tank (1) for waste that is with two-thirds of its length set in the hole (7) in the ground. At the top of the hole (7) around the plastic tank (1) there is a concrete pad (2). On the concrete pad (2) there is mounted an octagonal housing (3). At the top of the octagonal housing (3) there is a cover (4) on whose upper side there is the rotary fixed cover (5) for receiving waste. On the cover (4) there are also fixed eye handles (10) for lifting the cover (4) on whose bearing plate (11) with hooks (9) is attached a waste bag (6) thus that the waste bag (6) is inserted into the plastic tank (1) and reaches its bottom. The waste bag (6) has fixed metal guides (6.4) for the rope (6.6) which is tightened and thus closes the bag waste (6) bottom. The emptying of the bag (6) is performed by the hook mounted on the waste transportation vehicle that is attached to the eye-handles (10) and lifts the cover (4) with the bag (6) unties the rope (6.6) and discharges the waste into the vehicle. When the bag (6) is empty, the rope (6.6) is tied again and the bag (6) is put back into the plastic tank (1) so that the cover(4) lies on the support (3.3) of the cover on the octagonal housing (3). There is another variant of the underground waste container design with a tin container (60) instead of the waste bag (6).

**(51)** ***B 65 F 1/12*** (2006.01) **(11) 2009/0493**
**(13) A**
(21) P-2009/0493 (22) 10.11.2009.
**(54) KONTEJNER ZA NEKATEGORISANI KUĆNI OTPAD**
(71) BLAGOJEVICA D.O.O., Kralja Petra I br. 1A, 11400 Mladenovac, RS
(72) RADOJIČIĆ, Živko, Blagojevica 1, Koraćica, 11400 Mladenovac, RS
(57) U uložak za unos kućnog otpada, pozicija 1 se ubacuje nekategorisani otpad koji se skuplja u plastičnom kontejneru za deponovanje nekategorisanog kućnog otpada, pozicija 2. Pražnjenje plastičnog kontejnera se vrši njegovim izvlačenjem pomoću dizalice koja je sastavni deo kamiona koji odvozi nekategorisani kućni otpad. Uložak za unos nekategorisanog kućnog otpada, pozicija 1 i poklopac kontejnera, pozicija 3 se nalaze iznad površine zemlje, a plastični kontejner za deponovanje nekategorisanog kućnog otpada, pozicija 2 i sigurnosna platforma, pozicija 4 se nalaze ispod površine zemlje.

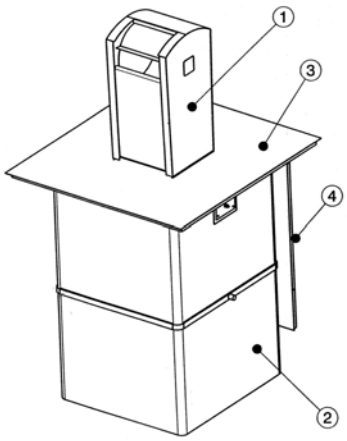


(54) CONTAINER FOR UNCLASSIFIED HOUSEHOLD WASTE

(57) Invention herewith described refers to the container for unclassified household waste. Into the unit for throwing in household waste, position 1, there is thrown unclassified waste collected in a plastic container for disposal of unclassified household waste, position 2. Unloading of the plastic container is performed by using a crane that is an integral part of the truck for the unclassified waste transport. The unit for throwing in household unclassified waste, position 1, and the cover of the container, position 3, are located above ground level, and the plastic container for disposal of unclassified household waste, position 2, and a security platform, position 4, are located below ground level.

**(51)** ***C 04 B 7/02*** (2006.01) **(11) 2009/0386**
***C 04 B 16/02*** (2006.01) **(13) A**
(21) P-2009/0386 (22) 30.06.2009.
(30) RS 30.06.2009. MP-2009/0056
**(54) PROCES PROIZVODNJE LAKOAGREGATNOG BETONA NA BAZI TRSKE**
(71) BJELAJAC, Bojan, Vinogradarska 52, 21234 Bački Jarak, RS
(72) BJELAJAC, Bojan, Vinogradarska 52, 21234 Bački Jarak, RS
(57) Pronalazak pripada oblasti veštačkog kamena tj. betonima. Suština pronalaska je zamena drvnog agregata trščanim i unapređenje životne sredine. Eksploatacija šuma i nekontrolisana upotreba drveta danas predstavlja ozbiljan ekološki problem. Trska (Pragmites australis triri) u vodenim ekosistemima pospešuje proces eutofizacije i zamuljivanja. Najčešća aktivna mera u praksi je paljenje trske, čime se dodatno opterećuje okruženje. Proizvodnjom lakoagregatnog betona na bazi granulisane trske, cementa i aditiva uspostavlja se okvir u skladu sa principima održivog razvoja, a njegovom upotrebom u građevinarstvu integralno se unapeđuje životna sredina.

(54) PRODUCTION PROCESS OF LIGHTWEIGHT AGGREGATE CONCRETE (LWAC) BASED ON REEDS

(57) Invention herewith described refers to the production process of lightweight aggregate concrete (LWAC) based on reeds and belongs to the field of artificial stone, i.e. concrete. The essence of the invention is the replacement of the wood aggregate with the reed one and environmental improvement. Exploitation of forests and uncontrolled use of wood nowadays is a serious environmental problem. Reeds (Pragmites australis trinius) in aquatic ecosystems improve the process of eutrophisation and siltation. The most frequent active measures in practice are the burning of reeds, which further burdens the environment. Production of lightweight aggregate concrete based on granulated reeds, cement and additives provides a framework in accordance with the principles of sustainable development, and its use in construction industry is integrally improving environment.

**(51)** ***C 05 F 11/08*** (2006.01) **(11) 2010/0244**
***C 12 N 1/20*** (2006.01) **(13) A**
***C 12 N 1/14*** (2006.01)
(21) P-2010/0244 (22) 04.12.2007.
(86) 04.12.2007. PCT/RU2007/000682
(87) 11.06.2009. WO 2009/072921
**(54) POSTUPAK ZA PROIZVODNJU KOMBINOVANOG MIKROBIOLOŠKOG ĐUBRIVA**
(71) OBSHESTVO S OGRANICHENNOY OTVETSTVENNOCTYU 'BISOL BI-INTER', shosse Podbelskogo, 3-220 Pushkin 8, St.Petersburg, 196608, RU

(72) CHEBOTAR, Vladimir, Kuzmich, ul. Kostyushko 2-1-293, St.Petersburg, 196247, RU; KAZAKOV, A1exandru, Efimovich, ul. Khazova, 32-63 Pushkin 8, St.Petersburg, 106608, RU; EROFEEV, Sergey, Viktorovich, ul. Kostyushko, 211-293, St.Petersburg, 196247, RU; DANILOVA, Tatiana, Nikolaevna, pr. Aleksandrovskoy fermy, 2-33, St.Petersburg, 193174, RU; NAUMKINA, Tatiana, Sergeevna, ul. Parkovaya, 31-52, Steletskoe Orel, 302502, RU; SHTARK, Oxana, Yurievna, pr. Veteranov, 160-62, St.Petersburg, 198264, RU; TIKHONOVICH, Igor, Anatolievich, vo. 16-ya liniya, 71-18, St.Petersburg, 199048, RU; BORISOVICH, Alexey, Yurievich, per. Drovyanoy, 12-8, St.Petersburg, 190121, RU
(74) PETOŠEVIĆ D.O.O, Vele Nigrinove 16a, 11000 Beograd, RS
(57) Pronalazak se odnosi na poljoprivredu pre svega na preradu ostataka od proizvodnje šećerne repe. Postupak za proizvodnju kombinovanog mikrobiološkog đubriva sastoji se u spajanju mikrobiološke komponente sa prirodnom biokompatibilnom osnovom, gde se kao jedna od mikrobioloških komponenti koristi inokulacioni materijal gljiva arbuskularne mikroze, kao prirodna biokompatibilna osnova koristi se defekt koji je ostatak posle filtriranja i ispiranja u proizvodnji šećera od šećerne repe, a spajanje se odvija u rizosferi biljaka koje se mikorizuju prilikom gajenja tih biljaka na defekatu. Zatim se u dobijeni supstrat dodaju ostali delovi mikrobiološke komponente i to rizobakterije i kvržične bakterije prethodno kultivisane u tečnim hranljivim sredinama.

(54) METHOD FOR PRODUCING COMBINED MICROBIOLOGICAL FERTILIZER

(57) The invention relates to agriculture, in particular to the processing of sugar production waste. The inventive method for producing combined microbiological fertilizer involves combining a microbiological component with a natural biocompatible carrier, wherein the inoculation material of arbuscular mycorrhizal fungi is used as a part of the microbiological component, a defecated juice in the form of a filtration washing precipitate of the sugar beet processing is used as a natural biocompatible carrier and the microbiological component is combined with the natural biocompatible carrier in the rhizosphere of mycorrhizal plants cultivated on the defecated juice. Afterwards, the remaining parts of the microbiological component, in particular rhizobium and rhizobacteria pre-cultivated on liquid nutritional media, are added to the thus produced substrate.

---

**(51)** ***C 07 C 333/04*** (2006.01) **(11) 2009/0556**
**(13) A**
(21) P-2009/0556 (22) 17.12.2009.
**(54) NOVI POSTUPAK SINTEZE PROPIL I BUTIL TIONKARBAMATNIH FLOTOREAGENASA**
(71) MILOSAVLJEVIĆ, Milutin, dr, Nedeljka Čarbinovića 59, 11000 Beograd, RS; MARINKOVIĆ, D. Aleksandar, dr, Radomira Markovića 33, Jajinci, RS; MARINKOVIĆ, Milan, Kneza od Semberije 10/7, Beograd, RS; PETROVIĆ, D. Slobodan, prof. dr, Požarevačka 6, Beograd, RS; DAŠIĆ, Predrag, mr, Velibora Markovića 92, Vrnjačka Banja, RS
(72) MILOSAVLJEVIĆ, Milutin, dr, Nedeljka Čarbinovića 59, 11000 Beograd, RS; MARINKOVIĆ, D. Aleksandar, dr, Radomira Markovića 33, Jajinci, RS; DAŠIĆ, Predrag, mr, Velibora Markovića 92, Vrnjačka Banja, RS; PETROVIĆ, D. Slobodan, prof. dr, Požarevačka 6, Beograd, RS; MARINKOVIĆ, Milan, Kneza od Semberije 10/7, Beograd, RS
(57) Novi postupak za dobijanje N-alkil i N,N-di-alkil-O-alkiltiokarbamata opšte formule (I) u kojoj R predstavlja propil ili butil grupu a $R_1$ etil, propil i izopropil grupu, okarakterisan je prema ovom pronalasku time što: alkilksantogenat (II) u kojoj R predstavlja propil ili butil grupu a Me natrijum ili kalijum, reaguje sa solima primarnih ili sekundarnih alkilamina i sumporne kiseline opšte formule (III), $R_1R_1(H)NH{\cdot}H_2SO_4$ u kojoj $R_1$ predstavlja etil, propil i izopropil grupu, a koje nastaju reakcijom neutralizacije primarnih ili sekundarnih alkilamina opšte formule (IV) u kojoj $R_1$ predstavlja etil, propil i izopropil grupu, sa sumpornom kiselinom (V), $H_2SO_4$ u prisustvu natrijum-hipohlorita kao oksidacionog sredstva (VI) NaOCl Pri temperaturi od 25°C do 30°C, u vodi kao rastvaraču, pri molskom odnosu alkilksantogenata, aminske soli sumporne kiseline i oksidacionog sredstva 1:0,55:1,5.

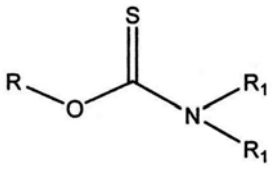

(I)

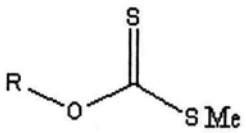

(II)

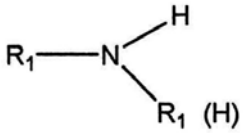

(IV)

(54) NEW PROCEDURE FOR SYNTHESIS OF PROPYL AND BUTYL THIONCARBAMATE FLOTATION REAGENTS

(57) Invention herewith described refers to the new procedure for obtaining N-alkyl and N,N-di-alkyl-O-alkylthiocarbamate of the general formula (I) where R represents propyl or butyl group and $R_1$ represents ethyl, propyl and isopropyl group, which is, according to this invention, characterized by: alkyl ksantogenat (II) where R represents propyl or butyl group and Me represents sodium or potassium, it reacts with salts of primary or secondary alkyl amines and sulphuric acid of the general formula (III) $R_1R_1(H)NH{\cdot}H_2SO_4$ in which $R_1$ represents ethyl, propyl and isopropyl group resulting from the reaction of neutralization of primary or secondary alkyl amines or secondary alkyl amines of the general formula (IV) in which R1 represents ethyl, propyl and isopropyl group, with sulphuric acid (V) $H_2SO_4$ in the presence of sodium hypochlorite as an oxidizing agent NaOCl (VI)
At a temperature of 25°C to 30°C, in water as a solvent, with the molar ratio of alkyl sanatogen, amine salts of sulphuric acid and oxidizing agent 1:0,55:1,5.

---

**(51)** ***C 07 C 333/16*** (2006.01) **(11) 2009/0555**
***C 07 F 3/06*** (2006.01) **(13) A**
(21) P-2009/0555 (22) 17.12.2009.

**(54) NOVI POSTUPAK SINTEZE CINK-DIAMILDITIOKARBAMATA KAO ADITIVA ZA TEČNA GORIVA**

(71) MILOSAVLJEVIĆ, Milutin, dr, Nedeljka Čarbinovića 59, 11000 Beograd, RS; MARINKOVIĆ, D. Aleksandar, dr, Radomira Markovića 33, Jajinci, RS; MILENKOVIĆ, Dragan, dr, Rasinska 32, Kruševac, RS; MARINKOVIĆ, Milan, Kneza od Semberije 10/7, Beograd, RS; PETROVIĆ, D. Slobodan, prof. dr, Požarevačka 6, Beograd, RS

(72) MILOSAVLJEVIĆ, Milutin, dr, Nedeljka Čarbinovića 59, 11000 Beograd, RS; MARINKOVIĆ, D. Aleksandar, dr, Radomira Markovića 33, Jajinci, RS; PETROVIĆ, D. Slobodan, prof. dr, Požarevačka 6, Beograd, RS; MARINKOVIĆ, Milan, Kneza od Semberije 10/7, Beograd, RS; MILENKOVIĆ, Dragan, dr, Rasinska 32, Kruševac, RS

(57) Novi postupak za dobijanje aditiva za tečna maziva cink-diamilditiokarbamata opšte formule (I) u kojoj $C_5H_{11}$- predstavlja n-amil ili 2-metilbutil grupu, a koji se sastoji iz 20% cink-di-n-amilditiokarbamata, formule (II) u kojoj n-$C_5H_{11}$- predstavlja n-pentil grupu, 18% cink-di-2-metilbutilditiokarbamata formule (III) u kojoj izo-$C_5H_{11}$- predstavlja 2-metilbutil grupu, 62% cink-2-metilbutilpentilditiokarbamata formule (IV) u kojoj izo-$C_5H_{11}$- predstavlja 2-metilbutil grupu, a n-$C_5H_{11}$- n-pentil grupu, okarakterisan je prema ovom pronalasku time što: natrijumova so diamilditiokarbaminske kiseline (V) dobijena u reakciji ugljendisulfida (VI),$CS_2$ smeše diamilamina: 20% di-n-pentilamin (VII), 18% di-2-metilbutilamin (VIII), 62% 2-metil-butilpentilamin(IX), i natrijum-hidroksida (X) NaOH u vodi kao rastvaraču, reaguje sa vodenim rastvorom cink-sulfata heptahidrata (XI), $ZnSO_4{\cdot}7H_2O$ pri čemu se nakon reakcije izdvaja proizvod pomoću ekstrakcionog sredstva toluena, kada se dobija koncentrat, ili pomoću vretenskog ulja, kada se dobija komercijalni proizvod kao 50%-tni rastvor cink-diamilditiokarbamata u vretenskom ulju, pri najpogodnijem molskom odnosu, amina, ugljendisulfida, natrijum-hidroksida i cink-sulfata 1,0:1,0:1,0:2,0, pri temperaturi od 28°C do 30°C i vremenu reakcije od 0,5 časova ( faza sinteze natrijum-diamilditiokarbamata ) i 50°C do 65°C i vremenu reakcije od 0,5 časova (faza sinteze cink-diamilditiokarbamata ) i 0,5 časova ( faza ekstrakcije sintetisanog cink-diamilditiokarbamata pomoću vretenskog ulja).

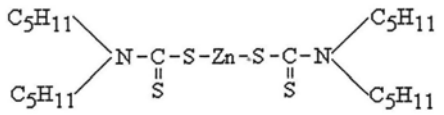
(I)

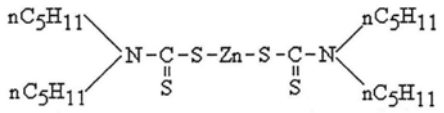
(II)

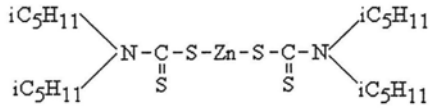
(III)

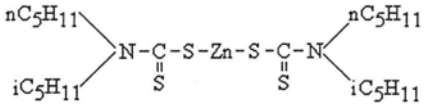
(IV)

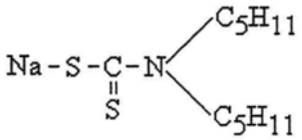
(V)

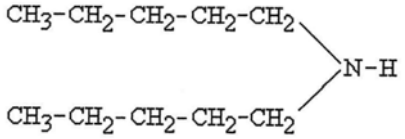
(VII)

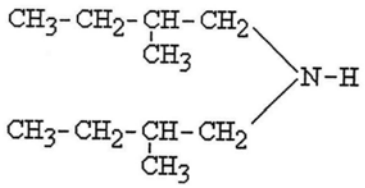

(VIII)

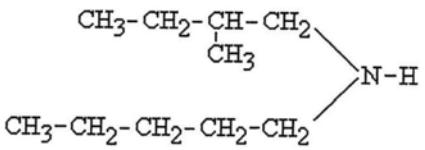

(IX)

(54) NEW PROCEDURE FOR SYNTHESIS OF ZINC-DIAMYL DITHIOCARBAMATES AS ADDITIVES FOR LIQUID FUELS

(57) Invention herewith described refers to the new procedure for obtaining the liquid lubricant additives of zinc-diamyl dithiocarbamate of the general formula (I) in which $C_5H_{11}$ represents n-amyl or 2-methylbutyl group, which consists of 20% of zinc di-n-amyldithiocarbamate of the formula (II) in which n-$C_5H_{11}$ represents n-pentyl group, 18% of zinc di-2- methylbutyldithiocarbamate of the formula (III) in which izo-$C_5H_{11}$ represents 2-methylbutyl group, 62% of zink-2-methylbutyldithiocarbamate of the formula (IV) in which izo-$C_5H_{11}$ represents 2- methylbutyl group, and n-$C_5H_{11}$-n-pentyl group, and is characterized according to this invention by: obtaining sodium salt (V) of diamyl dithiocarbamate acid (V) in the reaction of carbon disulphide (VI), $CS_2$ Mixture of diamylamine: 20% di-n-pentylamine (VII), 18% of di-2- methylbutylamine (VIII), 62% of 2-methylbutyl pentylamine (IX), and sodium hydroxide (X) NaOH in water as a solvent, reacts with an aqueous solution of zinc sulphate heptahydrate (XI), $ZnSO_4 \cdot 7H_2O$ where after the reaction, the product is extracted using the extraction medium toluene, when the concentrate is obtained or using spindle oil when a commercial product is obtained as a 50% solution of zinc-diamyl dithiocarbamate in spindle oil with the most suitable molal ratio of amines, carbon disulphide, sodium hydroxide and zinc sulphate 1,0:1,0:1,0:2,0, at a temperature of 28°C to 30°C and reaction time of 0.5 hours (synthesis phase of sodium diamyl dithiocarbamate) and 50°C to 65°C and reaction time of 0.5 hours (synthesis phase of zinc-diamyl dithiocarbamate) and 0.5 hours (extraction phase of synthesized zinc diamyl dithiocarbamate using spindle oil).

**(51)** ***C 12 C 3/12*** (2006.01) **(11) 2010/0192**
***C 12 C 7/20*** (2006.01) **(13) A**
***C 12 C 7/24*** (2006.01)
(21) P-2010/0192 (22) 29.10.2008.
(30) EP 29.10.2007. 07119465.8
(86) 29.10.2008. PCT/EP2008/064627
(87) 07.05.2009. WO 2009/056554

**(54) POSTUPAK ZA PRIPREMU FERMENTISANOG PIĆA**

(71) ANHEUSER-BUSCH INBEV S.A., Grand-Place 1, 1000 Brussels, BE
(72) VANDERHAEGEN, Bart, Marcel, Peter, Eeuwfeeststraat 38, B-3010 Kessel-Lo, BE; ADAM, Pierre, Marie, Fernand, Rue d`Enfer 78, B-1457 Walhain, BE
(74) SD PETOŠEVIĆ i dr. O.D., Vele Nigrinove 16a, 11000 Beograd, RS
(57) Pronalazak se odnosi na postupak dobijanja minimalne koncentracije od 20 $.10^{-6}$ kg/L izo-α-kiselina u tečnoj smeši. Navedeni postupak se karakteriše time što se u vodi meša prirodni izvor α-kiselina i najmanje jedan oksid metala.

(54) PROCESS FOR PREPARING A FERMENTED BEVERAGE

(57) A process for obtaining a minimum concentration of $20.10^{-6}$ kg/L of iso-α-acids in a liquid composition, said process being characterized by mixing in water: a natural source of α-acids; and at least one metal oxide.

**(51)** ***C 12 P 33/10*** (2006.01) **(11) 2011/0079**
***C 12 P 33/16*** (2006.01) **(13) A**
***C 07 J 1/00*** (2006.01)
***C 07 J 3/00*** (2006.01)
***C 07 J 5/00*** (2006.01)
***C 07 J 7/00*** (2006.01)
***C 07 J 9/00*** (2006.01)
***C 07 J 11/00*** (2006.01)
***C 07 J 31/00*** (2006.01)
***C 07 J 41/00*** (2006.01)
***A 61 K 31/56*** (2006.01)
(21) P-2011/0079 (22) 24.07.2003.
(62) P-2005/0045
(30) DE 24.07.2002. 10233723.3
US 14.08.2002. 60/402953

**(54) MIKROBIOLOŠKI POSTUPAK ZA DOBIJANJE 7ALFA-SUPSTITUISANIH 11ALFA-HIDROKSISTEROIDA**

(71) SCHERING AKTIENGESELLSCHAFT, Müllerstrasse 178, 13353 Berlin, DE
(72) ZORN, Ludwig, Osianderweg 45a, 13509 Berlin, DE; BOHLMANN, Rolf, Kühler Weg 6a, 14055 Berlin, DE; GALLUS, Norbert, Götzstr. 25, 12099 Berlin, DE; KÜNZER, Hermann, Turiner Str.4, 13347 Berlin, DE; MUHN, Hans-Peter, Markgrafenstr. 61, 13465 Berlin, DE; NUBBEMEYER, Reinhard, Wilhelmstr. 9, 13467 Berlin, DE
(74) MIHAILOVIĆ, Vojislav, Vuka Karadžića 7a, 11000 Beograd, RS

(57) Opisuje se novi put sinteze za dobijanje početnih proizvoda za dobijanjejedinjenja opšte formule (8, 10, 12). Pri ovoj sintezi nastaju u jednoj mikrobiološkoj reakciji jeinjenja opšte formule (4, B). Značenja ostataka $R^7$, $R^{10}$, $R^{11}$, $R^{13}$, $R^{17}$ i $R^{17'}$ kao i grupacije U-V-W-X-Y-Z su navedena u patentnim zahtevima.

(54) MICROBIOLOGICAL PROCEDURE FOR OBTAINING 7ALPHA-SUBSTITUTED 11ALPHA-HYDROXYSTEROIDS

(57) Invention herewith described refers to a new way of synthesis for obtaining initial products for getting compounds of the general formula (8, 10, and 12). This synthesis results in microbial reaction compounds of the general formula (4, B). Meanings of the residuals $R^7$, $R^{10}$, $R^{11}$, $R^{13}$, $R^{17}$ and $R^{17'}$ and groups U-V-W-X-Y-Z are listed in the patent claims.

---

**(51)** ***D 03 D 43/04*** (2006.01) **(11) 2010/0026**
***D 03 D 49/34*** (2006.01) **(13) A**
(21) P-2010/0026 (22) 25.01.2010.
**(54) POLUAUTOMATSKI PNEUMATSKI RAZBOJ ZA TKANJE TEPIHA I ĆILIMA**
(71) HOĆANIN, Harun, Rifata Burdževića 83, 36300 Novi Pazar, RS
(72) HOĆANIN, Harun, Rifata Burdževića 83, 36300 Novi Pazar, RS
(57) Poluautomatski pneumatski razboj za tkanje tepiha i čilima, je pronalazak kojim je rešen problem konstrukcije razboja koji objedinjuje funkcije snovanja i tkanja pri čemu dužina tkanog materijala može da iznosi do 100 m sa maksimalnom čvoražom od 2250000 čvorova po $m^2$. Ovo je ostvareno tako što funkciju snovanja omogućavaju pilot (16) i osnovin valjak (17) sa segmentima (19) dok funkciju pripreme tkanja omogućavaju tri međusobno spregnuta gornja valjka (40, 41 i 42). Proces tkanja vrši se nitima (50) osnove koje u dve grupe naizmenično prolaze kroz jedno brdilo (42) i češalj kirkita (43). Ravnomerno odvođenje natkanog materijala ostvaruje se preko tri donja valjka (45, 46 i 47), pri čemu direktna sprega između valjka (17) osnove i donjeg valjka (45) omogućava stalnu zategnutost osnovinih niti (50) što znatno podiže kvalitet gotovih proizvoda.

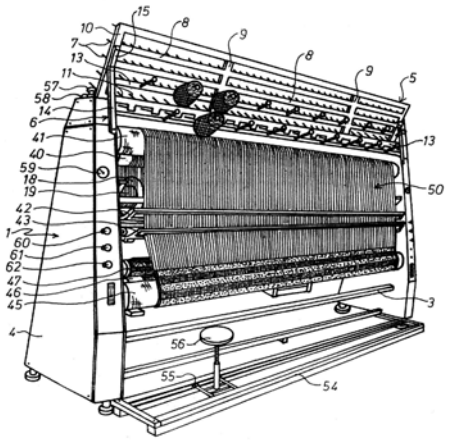

(54) SEMI AUTOMATIC PNEUMATIC LOOM FOR CARPET AND WOVEN RUG WEAVING

(57) Invention herewith described refers to the semi automatic pneumatic loom for weaving carpets and woven rugs. This invention solves the problem of the loom design by combining the operations of warping and weaving where the length of the woven fabric may be up to 100 m with a maximum of 2,250,000 knots per $m^2$. This is accomplished by allowing the warping function to enable the heddle (16) and the main roller (17) with segments (19) while the function of the weaving preparation enable the three mutually coupled upper rollers (40, 41 and 42). The weaving is performed with two groups of warp strings (50) alternately passing through one sley (42) and the ''kirkit'' (43). The woven fabric goes evenly across three lower rollers (45, 46 and 47), whereat the direct connection between the base roller (17) and the lower roller (45) provides a constant tension of the warp threads (50) which significantly improves quality of the finished products.

---

**(51)** ***E 03 F 7/04*** (2006.01) **(11) 2009/0479**
***E 03 F 7/06*** (2006.01) **(13) A**
***F 16 L 29/00*** (2006.01)
(21) P-2009/0479 (22) 04.11.2009.
**(54) JEDNOSMERNI KANALIZACIONI VENTIL ZA WC ŠOLJE SA HORIZONTALNIM ODVODOM**
(71) AGROTEKA SZGR, Trebevićka 35/10, 11000 Beograd, RS
(72) AĆIMOVIĆ, Miroslav, Trebevićka 35/10, 11000 Beograd, RS
(57) Jednosmerni kanalizacioni ventil se montira tako sto se prvo odvodna cev (10) montira na kanalizacioni odvod u zidu, a zatim se dvodelna dovodna cev (1), teleskopski izvuče i montira na odvod iz WC šolje. Ventil se rotira dok se visak (9) ne poklopi sa referentnim zarezom na telu ventila. Fekalna voda iz WC šolje prolazi kroz dvodelnu dovodnu cev (1), podiže metalnu klapnu (3) i kroz telo ventila (6) i odvodnu cev (10) odlazi u kanalizaciju. Pomoću poluge za blokadu klapne (8), proved se da li se metalna klapna (3) vratila u početni položaj. Ako poluga za blokadu (8) ne moze da blokira metalnu klapnu (3), otvara se revizioni otvor (7) i otkloni zapušenje.

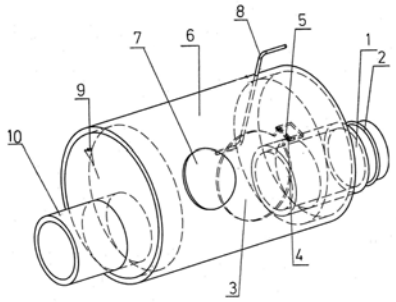

(54) ONE-WAY DRAIN VALVE FOR WASH-OUT TOILET BOWLS WITH HORIZONTAL OUTFLOW

(57) Invention herewith described refers to the one-way drain valve for wash-out toilet bowls with horizontal outflow mounted so that firstly the waste pipe (10) is mounted to a sewage outflow in the wall, and then the two-piece supply pipe (1) is telescopically pulled out and mounted on the toilet bowl outflow. The valve is rotated until the pendulum (9) does not coincide with the reference point on the valve body. Faecal water from the toilet bowl goes through two-piece supply pipe (1), raises the metal flap (3) and through the body of the valve (6) and the waste pipe (10) goes into the sewerage. By using the lever (8) for the flap blockage, it can be checked whether the metal flap (3) has returned to the starting position. If the lever (8) for the flap blockage can not block the metal flap (3), the revision hole (7) opens up and removes the obstruction.

**(51)** ***E 05 B 29/00*** (2006.01) **(11) 2009/0418**
**(13) A**
(21) P-2009/0418 (22) 02.10.2009.
**(54) BRAVA UPRAVLJAČA VOZILA**
(71) RISTIĆ, Ivana, Višnićeva 4a, 11000 Beograd, RS
(72) RISTIĆ, Ivana, Višnićeva 4a, 11000 Beograd, RS
(57) Brava upravljača vozila, namenjena za zabravijivanje upravljača na putničkim vozilima, sastavljena je od cevastog kudišta (1) u kojem je zavrtnjima (18) učvršćen nosač (13). Kroz nosač (13) provučena je pokretna letva (11) koja na jednom kraju ima čivijom (20) učvršćen klin (14) a na drugom kraju preko osovinice (9) zakretno uležištenu polugu (10). Drugi kraj poluge (10) ima osovinicu (30) vođenu u žlebu (24) nosača (13). Pokretna letva (11) ima ispust (32) koji je preko spiralne opruge oslonjen na nosač (13). Između pokretnog valjka (7) i nosača (13) postavljena je spiralna opruga (8).

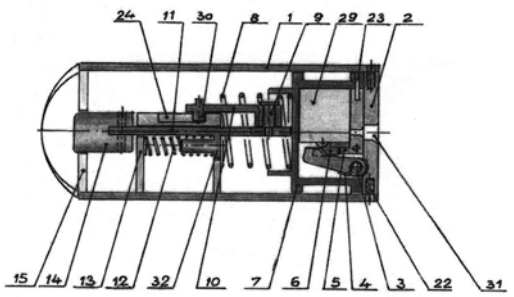


(54) STEERING WHEEL LOCK

(57) Invention herewith described refers to the steering wheel lock designed for locking the passenger vehicle steering wheel consisting of the tubular housing (1) within which is with screws (18) fixed the bracket (13). Through the bracket (13) there is pulled the mobile batten (11) that at one end has by a pin (20) fixed wedge (14) and at the other end through the pivot (9) rotary embedded lever (10). The other end of the lever (10) has a pin (30) guided in the groove (24) of the bracket (13). The mobile batten (11) has a lap (32) which is through the helical coil spring abutted on the bracket (13). Between the movable roller (7) and the bracket (13) there is mounted the helical coil spring (8).

**(51)** ***F 02 C 1/02*** (2006.01) **(11) 2009/0526**
***F 02 K 3/00*** (2006.01) **(13) A**
(21) P-2009/0526 (22) 02.12.2009.
**(54) MAŠINA ZA ISPITIVANJE SRCA TURBO KOMPRESORA**
(71) KALEZIĆ, Momčilo, Banjički venac 22, 11000 Beograd, RS; NIKOLIĆ, Sreten, Jele S.Savić 7, 15000 Šabac, RS
(72) KALEZIĆ, Momčilo, Banjički venac 22, 11000 Beograd, RS; NIKOLIĆ, Sreten, Jele S.Savić 7, 15000 Šabac, RS
(74) DIMITRIJEVIĆ, Slobodan, učitelja Miloša Jankovića 2a, 11000 Beograd, RS
(57) Pronalazak se odnosi na mašinu za ispisivanje srca turbo kompresora, kod koje je u kućištu (P) postavljena radna ploča (10) i na njoj, preko opruga (91) oscilatorna ploča (9) na kojoj je preko alata (8) pričvršćeno srce (34) turbo kompresora na čiju turbinu (T) je navučen starter (16). Na kompresor (K) navučen poklopac (19) sa magnetnim senzorom (22) koji je spojen sa mernom elektronikom (20) sa kojom je spojen i akcelerometar (21) spregnut sa oscilatornom pločom (9). U kućištu (P) postavljen je rezervoar (1) za ulje, čiji su grejač i davač (23) temperature spojeni sa mernom elektronikom (20). Rezervoar (1) je preko pumpe (3) sa motorom (2), preko filtera (4) i ventila (7) protoka ulja, napojnim vodom (71) spojen sa srcem (34) turbo kompresora, sa kojim je spojen i povratnim vodom (72). Napojni vod (71) preko prelivnog ventila (5) spojen je sa rezervoarom (1), a transmiter pritiska (6) elektronski spojen sa mernom elektronikom (20). Rezervoar vazduha, (36), preko transmitera pritiska (11) i elektromagnetnog ventila (12), koji su elektronski spojeni sa mernom elektronikom (20), te preko ručnog ventila vazduha (13) sa komandnom ručicom (132) napojnim vodom (131) spojen je sa razvodnikom (14) vazduha koji je crevima (15) spojen sa starterom (16) turbine (T). Starter (16) je povratnim vodom (17) spojen, sa prigušivačem (18) zvuka. Komandna tabla (24) vodovima (26, 27, 28, 29, 30) spojena je sa mernom elektronikom (20), a vodom (25) sa personalnim računarom (31) koji je spojen sa monitorom (32) i štampačem (33).

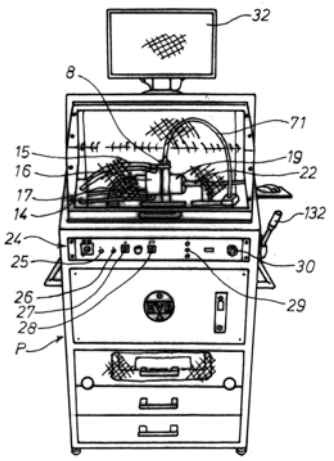


(54) MACHINE FOR TURBO COMPRESSOR CORE ASSEMBLY TESTING

(57) Invention herewith described refers to the machine for turbo compressor core assembly testing that consists of the housing (P) including working board (10), with a spring (91) mounted oscillatory plate (9) to which is through the tool (8) fixed the turbo compressor core assembly (34) on the turbine (T) of which is slipped on the starter (16). Over the compressor (K) there is pulled the cover (19) with the magnetic sensor (22) which is connected to the measuring electronics (20) to which there is also connected the accelerometer (21) coupled to the oscillatory plate (9). In the housing (P) there is mounted the oil tank (1) whose heater and temperature gauge pickup (23) are connected with the measuring electronics (20). The tank (1) is through the pump (3) with the motor (2) through the filter (4) and oil flow valves (7), feed line (71) connected with the turbo compressor core assembly (34) as well as with the return line (72). The feed line (71) is through the discharge valve (5) attached to the tank (1), and the pressure transmitter (6) is electronically connected to the measuring electronics (20). The air reservoir (36) is through the pressure transmitter (11) and the electromagnetic valve (12), which are electronically connected to the measuring electronics (20), and through the manual air valve (13) with the control arm (132), and feed line (131) connected with the air distributor (14) which is via hoses (15) connected to the starter (16) of the turbine (T). The starter (16) is through the return line (17) connected with the silencer (18). The control panel (24) is through the lines (26, 27, 28, 29, and 30) connected with the measuring electronics (20) and via the line (25) with the personal computer - PC (31) which is connected with a monitor (32) and a printer (33).

**(51)** ***F 03 D 9/02*** (2006.01) **(11) 2009/0129**
***F 03 D 9/00*** (2006.01) **(13) A**
***F 03 G 7/08*** (2006.01)
***F 03 G 7/00*** (2006.01)
(21) P-2009/0129 (22) 27.03.2009.

**(54) AKUMULACIJA PRIRODNE ENERGIJE I ENERGIJE OTPORA PRI KRETANJU VOZILA, PRIMENOM VAZDUŠNIH PUMPI**

(71) RADOVANOVIĆ, Tomislav,
Vojvode Petra Bojovića 3, 34000 Kragujevac, RS
(72) RADOVANOVIĆ, Tomislav,
Vojvode Petra Bojovića 3, 34000 Kragujevac, RS

(57) Akumulacija prirodne energije i energije otpora pri kretanju vozila primenom vazdušnih pumpi, ukazuje na potrebu korišćenja ogromnih mogućnosti prirodnih energetskih potencijala, kao i mogućnosti da se iskoriste sile otpora koje se javljaju pri kretanju tela (vozila).
U ovakvim i svim sličnim slučajevima korišćenja ove energije, dolazi do velikih ušteda vitalnih energenata i maksimalne zaštite životne sredine. Pronalazak može da se osloni na dosadašnja iskustva korišćenja alternativnih prirodnih izvora i otpora koji se javljaju pri kretanju tela. Bitno je da postoji sila koja može da pokrene: kolenasto vratilo (11) i klipnjače (9) kod vetrenjače klipnjače (23) kod pumpi kao amortizera, kolenasto vratilo (45) i klipnjače (49) kod vozila koje se kreće nizbrdo. Pokreti se prenose na odgovarajuće klipove koji sabijaju vazduh u komore višeg pritiska (A) i sabirne komore (B) koje su nižeg pritiska. Razliku pritiska u komorama (A) i (B) omogućavaju dve vrste jednosmernih ventila, sa težom i lakšom propustljivošću. Sabijeni vazduh iz sabirnih komora označenih sa (B) izlazi kroz slavine (15, 29 i 52) radi transformacije u električnu struju ili za druge potrebe. Pronalazak se odnosi na tehničke oblasti, mašinstva i pneumatiku gasova.

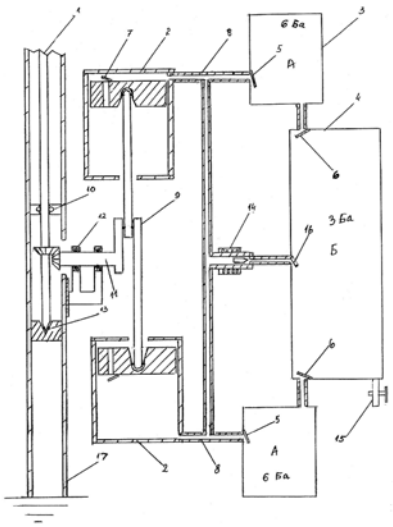

(54) ACCUMULATION OF NATURAL ENERGY AND RESISTANCE ENERGY DURING VEHICLE MOVEMENT BY APPLYING AIR PUMPS

(57) Invention herewith described refers to the accumulation of natural energy and resistance energy at a vehicle movement using air pumps, indicates the need to use the enormous capacities of natural energy resources, as well as opportunities to exploit the resistance forces occurring during movement of the body (vehicle). In these and all similar cases of use of this energy, there are large savings of vital energy-generating products and maximum environmental protection. The invention can rely on past experiences of the use of alternative natural resources and the resistance occurring during the body movement. It is essential that there is a force that can initiate the crankshaft (11), the piston rods (9) in windmills, and the pump piston rod (23) as an absorber, the crankshaft (45) and the piston rod (49) in a vehicle moving downhill. The movements are transmitted to the appropriate pistons that compress the air into the chambers of higher pressure (A) and the recessing spaces (B) which have lower pressure. The difference of the pressures in the chambers (A) and (B) allow two types of one-way valves, with severe and minor permeability. Compressed air from the recessing spaces marked with (B) goes through the taps (15, 29 and 52) for the purpose of transformation into electricity or for other requirements. The invention relates to the technical field, engineering and pneumatics.

---

**(51)** ***F 03 D 11/04*** (2006.01) **(11) 2009/0409**
**(13) A**
(21) P-2009/0409 (22) 22.09.2009.
**(54) SISTEM UGRADNJE VETRENJAČA NA STUBOVIMA DALEKOVODA I NOSAČIMA KONTAKTNE MREŽE ŠINSKIH VOZILA**
(71) MILIĆEVIĆ, Mitar, Vojvode Stepe 129, 11000 Beograd, RS; MILIĆEVIĆ, Olivera, Vojvode Stepe 129, 11000 Beograd, RS; MILIĆEVIĆ, Ivan, Vojvode Stepe 129, 11000 Beograd, RS
(72) MILIĆEVIĆ, Mitar, Vojvode Stepe 129, 11000 Beograd, RS; MILIĆEVIĆ. Olivera, Vojvode Stepe 129, 11000 Beograd, RS; MILIĆEVIĆ, Ivan, Vojvode Stepe 129, 11000 Beograd, RS
(57) Sistem ugradnje vetrenjača na stubovima-nosačima dalekovoda i stubovima-nosačima kontaktne mreže šinskih vozila. Suština pronalaska je da se izgrade vetrenjače za proizvodnju struje, sa što manjim ulaganjima, u odnosu na vetrenjače postavljene na samostalne stubove. Visoke stubove-nosače treba graditi od šupljih metalnih profila kroz koje će strujati vazduh. Kada su stubovi izloženi dejstvu sunca, kroz šuplje profile će strujati zagrejani vazduh, koji može pokretati vetrenjaču i ako nema vetra. Postojeće stubove-nosače, na kojima će se ugrađivati vetrenjče, zbog dodatnog opterećenja treba ojačati dodatnim profilima, tako da se dobiju kanali kroz koje će strujati vazduh. Stubovi-nosači služit će za postavljanje prenosne mreže za struju proizvedenu u vetrenjačama, što dodatno smanjuje cenu izgradnje a time i rentabilnost ugradnje vetrenjača na stubovima-nosačima koji služe za druge namene.

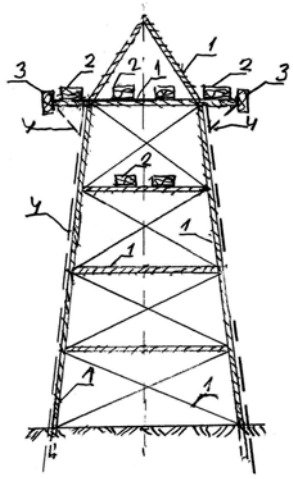

(54) SYSTEM FOR INSTALLING WINDMILLS ON OVERHEAD TRANSMISSION TOWERS AND SUPPORTING STRUCTURES OF RAIL VEHICLE CONTACT NETWORKS

(57) Invention herewith described refers to the system for installing the windmills on overhead transmission towers and supporting structures of the rail vehicle contact networks. The essence of this invention is to build the windmills for electricity production with lower investments compared to windmills installed on individual poles. High supporting structures should be manufactured of hollow metal profiles through which will flow air. When the pillars are exposed to the sun, through the hollow profiles will flow heated air which can drive a windmill even if there is no wind. Because of additional loads, the existing supporting structures on which the windmills will be installed should be strengthened with additional profiles to obtain the air circulation channels. Supporting structures will be used for mounting the transmission network for electricity produced by windmills, which further reduces the construction costs and thus increases the profitability of installing windmills on supporting structures used for other purposes.

---

**(51)** ***F 03 G 3/00*** (2006.01) **(11) 2009/0561**
***F 03 G 7/08*** (2006.01) **(13) A**
***F 03 G 7/10*** (2006.01)
(21) P-2009/0561 (22) 24.12.2009.
**(54) PLANETARNI MOTOR**
(71) STREČANOVIĆ, Dragiša, Branka Radičevića Z9/1, 35000 Jagodina, RS

(72) STREČANOVIĆ, Dragiša, Branka Radičevića Z9/1, 35000 Jagodina, RS
(57) Planetarni motor je uređaj konstrukcijski tako rešen da može da proizvodi mehaničku energiju, jer telo (G) svojim stalnim padovima omogućava da projekcija sile težine tela (G) deluje preko rukavaca na polugu (P) zatim sa poluge (P) na vitla (V) i sa vitla (V) preko lanca (L) ili užeta na konstrukciju (K) koja je na osovini (O), da stvara moment i da stalni padovi tela (G) definiše brzinu uređaja.

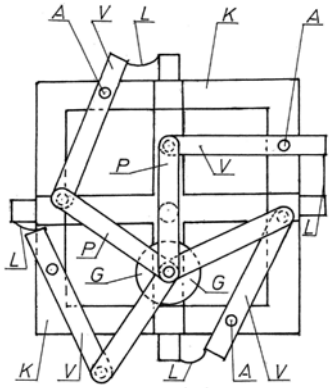


(54) PLANETARY MOTOR

(57) Invention herewith described refers to the planetary motor, the device whose design allows it to produce mechanical energy, because the body (G) with its constant drops enables the body (G) weight power projection to act through the journals on the lever (P) and then from the lever (P) on the winches (V) and from the winches (V) through the chain (L) or rope on the motor construction (K) which is on the axle (O), to generate momentum and that the permanent body (G) drops define the device velocity.

---

**(51)** ***F 22 B 3/02*** (2006.01) **(11) 2009/0398**
***F 28 D 20/00*** (2006.01) **(13) A**
***F 24 H 7/00*** (2006.01)
(21) P-2009/0398 (22) 10.09.2009.
**(54) TERMOAKUMULACIONI BLOK-PAROGENERATOR**
(71) SPASOVIĆ, Slobodan, Đoke Popovića 2, 32000 Čačak, RS
(72) SPASOVIĆ, Slobodan, Đoke Popovića 2, 32000 Čačak, RS
(74) DIMITRIJEVIĆ, Slobodan, Učitelja Miloša Jankovića 2a, 11000 Beograd, RS
(57) Pronalazak se odnosi na termoakumulacioni blok-parogenerator kod koga je, prema osnovnoj varijanti izvodjenja, sa spoljne strane čeličnog rezervoara (4) postavljen sloj (5) termoizolacionog materijala sa spoljašnjom oblogom (6). Unutar rezervoara (4) postavljeni su blokovi (1) od livenog gvožđa, velike mase u koje su, prilikom izlivanja, ubačene cevi (2) izrađene od nerđajućeg čelika ili grafita ili keramike ili kvarcnog stakla. Cevi (2) povezane su sa parovodom (9) izrađenim od čeličnih cevi, i u njih su ubačene manje cevi (24) koje su preko cevovoda (10) povezane sa rezervoarom destilovane vode (13) koji je spojen sa kolonom (16) za destilovanu vodu. U cevovod (10) ugradjeni su napojna pumpa (14) i nepovratni ventil (11). Unutar rezervoara (4), prostor između čeličnih blokova (1) popunjen je legurom (3) metala. Rezervoar (4) preko cevovoda (7) za istopljeni metal povezan je sa solarnim kolektorom (8). Pumpa (15) ugradjena je u cevovod (7) u koji su ugradjeni i ventil (19), vetil (18) za pražnjenje, ekspanziona posuda (20) i odzračni ventili (21). U cevovod (7) ugradjen je i gasni gorionik (23). U rezervoaru (4) postavljen je električni ili gasni grejač (17). Parovod (9) povezan je sa turbogeneratorom (12), a njegov povratni vod (25) spojen je sa rezervoarom (13), dok je merač pritiska (22) turbogeneratora (12) povezan električno sa pumpom (14).

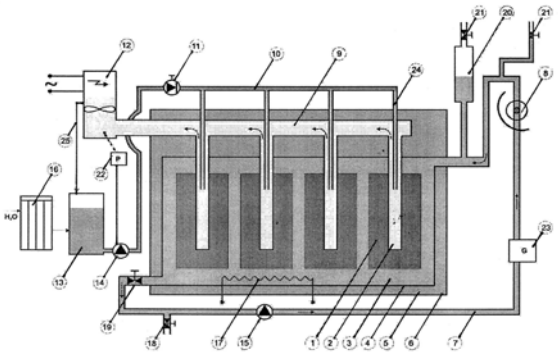

(54) THERMAL STORAGE BLOCK - STEAM GENERATOR

(57) Invention herewith described refers to the thermal storage block-steam generator where, according to the basic design, on the outside of the steel tank (4) is put a layer (5) of thermal insulation material with an outer coating (6). Within the reservoir (4) there are cast iron blocks (1) with large mass into which are, during casting, inserted pipes (2) made of stainless steel or graphite or ceramics or quartz glass. The pipes (2) are connected with the steam piping (9) made of steel pipes with inserted smaller pipes (24) that are through the piping (10) connected to the reservoir of distilled water (13) which is connected with a column (16) for distilled water. Into the piping (10) there are installed the feed pump (14) and the non-return valve (11). Within the reservoir (4), here is a space between the steel blocks (1) filled with the alloy (3) metal. The reservoir (4) is through the piping (7) for the melted metal attached to the solar collector (8). The pump (15) is mounted in the piping (7) as well as the valve (19), discharge valve (18), expansion vessel (20) and air vent valves (21). Into the piping (7) there is built in the gas burner (23). Into the reservoir (4) is installed an electric or gas heater (17). The steam piping (9) is connected with the turbo-generator (12), and its return line (25) is connected with the reservoir (13), while the pressure gauge (22) of the turbo-generator (12) is electrically connected to the pump (14).

**(51)** ***F 23 C 5/08*** (2006.01) **(11) 2010/0550**
***F 23 C 7/00*** (2006.01) **(13) A**
(21) P-2010/0550 (22) 24.10.2008.
(86) WO 24.10.2008. PCT/CN2008/001800
(87) WO 23.12.2009. WO 2009/152654

**(54) OPREMA ZA ZIDNO PALJENJE HORIZONTALNIM UTICAJEM NA SAGOREVANJE SMRVLJENOG UGLJA**

(71) HARBIN INSTITUTE OF TECHNOLOGY, 92, West Dazhi Street, Harbin, Heilongjiang 150001, CN
(72) WU, Shaohua, 92, West Dazhi Street, Harbin, Heliongjiang 150001, CN; SUN, Shaozeng, 92, West Dazhi Street, Harbin, Heliongjiang 150001, CN; LIU, Hul, 92, West Dazhi Street, Harbin, Heilongjiang 150001, CN; QIN, Ming, 92, West Dazhi Street, Harbin, Heilongjiang 150001, CN; QIN, Yukun, 92, West Dazhi Street, Harbin, Heliongjiang 150001, CN
(74) MIHAILOVIĆ, Vojislav, Vuka Karadžića 7a/IV, 11000, Beograd, RS
(57) Opreme za sagorevanja smrvljenog uglja ima peć (5) sa četiri vodom hlađena zida (6). Mnošto vrhova mlaznice (1) za struju bogatu gorivom primarnog vazduha i uglja, mnoštvo vrhova mlaznice (2) za struju siromašnu gorivom primarnog vazduha i uglja i mnoštvo vrhova mlaznice (3) za sekundarni vazduh su raspoređeni na vodom hlađene zidove (6) peći (5) da se formira set gorionika (7). Mnoštvo vrhova mlaznice (4) za vazduh koji ide preko vatre je raspoređen na svakom uglu peći (5) ili na svakom vodom hlađenom zidu (6). Vrh mlaznice (4) za vazduh koji ide preko vatre je raspoređen iznad gorionika (7). Uključeni ugao između centralne linije vrha mlaznice (3) za sekundarni vazduh i njegovog vodom hlađenog zida (6) uz plamenu loptu je u rasponu od 54 do 127 stepeni.

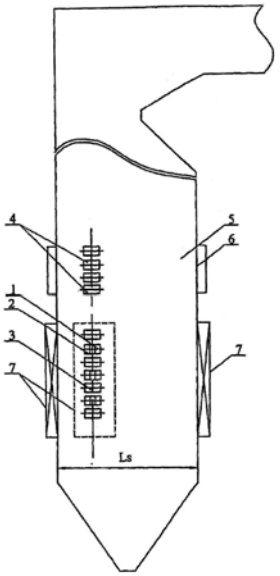


(54) HORIZONTAL THICK AND THIN DIRECT-CURRENT PULVERIZED COAL BURNER ARRANGED BY WALL TYPE

(57) Invention herewith described refers to the equipment for the combustion of pulverized coal that includes furnace (5) with four water-cooled walls (6). Numerous nozzle (1) peaks for the spray rich with fuel of primary air and coal, numerous nozzle (2) peaks for the current poor fuel primary air and coal, and numerous nozzle (3) peaks for the secondary air are arranged on the water-cooled walls (6) of the furnace (5) to form a set of burners (7). Numerous nozzle (4) peaks for the air that goes over the fire are arranged at each corner of the furnace (5) or on all water cooled walls (6). The nozzle (4) peak for the air that goes over the fire is situated above the burner (7). The included angle between the central line of the nozzle (3) peak for secondary air and its water-cooled wall (6) with the flame ball is in the range of 54 to 127 degrees.

**(51)** ***F 23 L 17/02*** (2006.01) **(11) 2009/0467**
***F 23 L 17/10*** (2006.01) **(13) A**
***F 23 L 17/08*** (2006.01)
(21) P-2009/0467 (22) 27.10.2009.

**(54) UNIVERZALNA ROTACIONA GLAVA ZA VENTILACIONE I DIMNJAČKE VODOVE**

(71) JAKIMOVSKI, Saša, Leposave Mihajlović 81, 11000 Beograd, RS
(72) JAKIMOVSKI, Saša, Leposave Mihajlović 81, 11000 Beograd, RS
(74) DIMITRIJEVIĆ, Slobodan, Učitelja Miloša Jankovića 2a, 11000 Beograd, RS
(57) Проналазак се односи на универзалну ротациону главу за вентилационе и димњачке водове, код које је, према основној варијанти извођења, тело (1) својим поклопцем (13) уметнуто у цилиндрично проширење (21) капе (2) и заварено варом (22). Утело (1) до поклопца (13) својим цилиндричним испустом (32) уметнут је конусни носач (3) и залепљен термостабилним лепком (33). У конусни носач (3) уметнут је конусни уметак (4) и за њега причвршћен термостабилним лепком (41). У отвору (42) уметка (4) заварена је цев (5) у којој је постављена чаура (51) у којој је клизно обртно улежиштена осовина (6). Аксијални лежај (61) осовине (6) уметнут је у цилиндрични упуст (31) напуњен мазивом (62). За конусни носач (3) заварене су три лопатице (7) постављене под углом од 120°. Други крај осовине (6) провучен је кроз кружне отворе на поклопцу (13), капи (2) и навртками (82, 83) причвршћен за држач (81) за који су једним својим крајем заварени носачи (8). Други крајеви носача (8), преко подлошке (84) и навртке (85) причвршћени су за адаптер (9) који је делимично горњим крајем уметнут у отвор (14) тела (1).

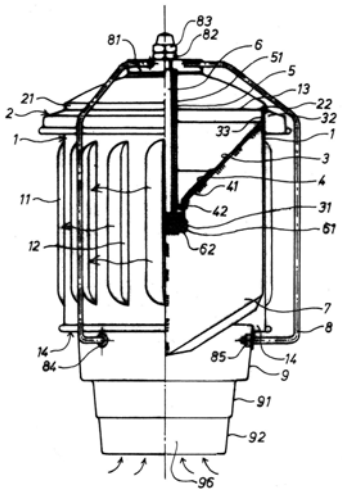

(54) UNIVERSAL ROTARY HEAD FOR VENTILATION AND FLUE DUCTS

(57) Invention herewith described refers to the universal rotary head for ventilation and flue ducts, in which, according to the basic variant, the body (1) is by its cover (13) inserted into the cylindrical extension (21) of the cap (2) and seal (22) welded. Into the body (1) next to the cover (13) with its cylindrical lap (32) there is inserted the cone bracket (3) and glued with a thermo stable adhesive (33). Into the cone bracket (3), there is inserted the conical insert (4) and attached to it with a thermo stable adhesive (41). Inside the opening (42) of the insert (4), the pipe (5) is welded wherein there is mounted the bushing (51) with the sliding rotary bedded shaft (6). The axial bearing (61) of the shaft (6) is inserted into the counter bore (31) filled with a lubricant (62). To the cone bracket (3) there are welded three blades (7) mounted at an angle of 120 degrees. The other end of the shaft (6) is pulled through the circular holes on the cover (13), the cap (2) and nuts (82, 83) and attached to the bracket (81) to which are with one end welded the supports (8). The other ends of the supports (8) are through the washer (84) and nut (85) attached to the adapter (9) which is with the upper end partially inserted into the opening (14) in the body (1).

**(51)** ***F 26 B 9/00*** (2006.01) **(11) 2009/0431**
***A 23 N 12/08*** (2006.01) **(13) A**
(21) P-2009/0431 (22) 12.10.2009.
**(54) UNIVERZALNA SEKCIJSKA SUŠARA ZA DOMAĆINSTVO**
(71) CEROVINA, Andrija, 11030 Beograd, Katarine Bogdanović 19, RS
(72) CEROVINA, Andrija, Katarine Bogdanović 19, 11030 Beograd, RS; CEROVINA, Bojan, Katarine Bogdanović 19, 11030 Beograd, RS
(57) Pronalazak, univerzalna sekcijska sušara za domaćinstvo je uređaj naročito primenjiv za poljoprivredno domaćinstvo kao i biznis sušenim biljnim i prehrambenim proizvodima. Sekcijska izvedba i energetsko rešenje uz jednostavno posluživanje i prilagođavanje potrebama, su glavne prednosti i uz konkurentnu cenu na tržištu. U tehničkim sekcijama je smešten toplotni izvor uz mogućnost loženja i čvrstog goriva i zajednički ventilator za cirkulaciju vazduha preko polica u jednoj ili više sekcija za sušenje proizvoda. Prema potrebi može se u sekcijama i policama vršiti i namensko podešavanje u skladu sa tehnološkim zahtevom sušenja, kao i montaža dupleks sušare sa više sekcija. Primenjeni materijali kao i prohrom za izradu saća omogućavaju dobro čišćenje i daju max.uslove da se udovolji sanitarnim propisima i kod sušenja svih vrsta proizvoda.

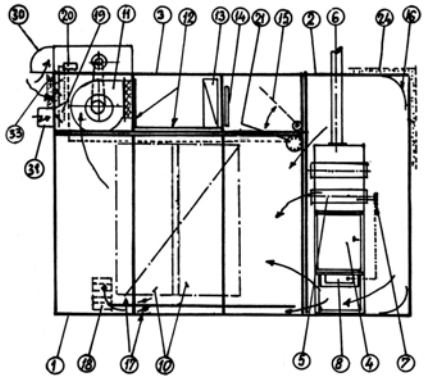

(54) UNIVERSAL SECTIONAL HOUSEHOLD DRYER

(57) Invention herewith described refers to the universal sectional household dryer as a device particularly suitable for a farm household as well as the business related to dried vegetable and food products. The sectional design and energy solutions with easy operation and adjustment to the requirements are the main advantages as well as the competitive market price. The heat source with the possibility of firing of solid fuel and a common fan to circulate air over the shelves in one or more sections for product drying are located in the technical sections. If necessary, in sections and shelves can be performed a predetermined adjustment in accordance with the technological requirement of drying as well as mounting a duplex dryer with multiple sections. Used materials, such as stainless steel for making combs, provide a good cleaning and maximum conditions for complying with sanitary regulations and for drying all kinds of products.

**(51)** ***G 01 D 5/14*** (2006.01) **(11) 2009/0542**
**(13) A**
(21) P-2009/0542 (22) 14.12.2009.
**(54) SENZOR ZA MERENJE POLOŽAJA NA OSNOVU PROJEKCIJE MAGNETNOG POLJA NA RAVAN MERENJA**

(71) JERANČE, Nikola, dr., Seljačkih buna 1, 21000 Novi Sad, RS
(72) JERANČE, Nikola, dr., Seljačkih buna 1, 21000 Novi Sad, RS
(57) Senzor za merenje položaja koristi magnet (1) koji je pokretljiv u odnosu na sondu (2) koja meri ugao vektora magnentne indukcije. Magnet se u odnosu na sondu kreće po zadatoj putanji (14). Sonda (2) je nagnuta u odnosu na ravan putanje (14) na kojoj se položaj meri.

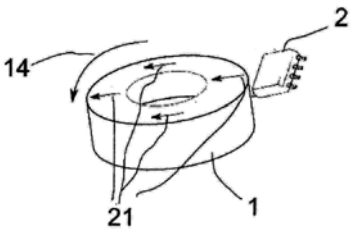


(54) POSITION SENSOR BASED ON PROJECTION OF MAGNETIC FIELD ON THE PLANE OF MEASUREMENT

(57) Invention herewith described refers to the position sensor based on projection of magnetic field on the plane of measurement. The sensor for the position measuring uses a magnet (!) which is movable in relation to the probe (2), which measures the angle of magnetic induction vector. The magnet, in relation to the probe, moves along a given path (14). The probe (2) is tilted in relation to the plane of the path (14) on which the position is measured.

**(51)** ***G 01 D 5/14*** (2006.01) **(11) 2009/0543**
**(13) A**
(21) P-2009/0543 (22) 14.12.2009.
**(54) SENZOR POLOŽAJA NA OSNOVU MAGNETNOG POLJA NA PRAVOLINIJSKOJ ILI KRIVOLINIJSKOJ PUTANJI U RAVNI**
(71) JERANČE, Nikola, dr, Seljačkih buna 1, 21000 Novi Sad, RS
(72) JERANČE, Nikola, dr, Seljačkih buna 1, 21000 Novi Sad, RS
(57) Senzor za merenje položaja sadrži uzdužno namagnetisani magnet pravougaonog preseka (1) koji je pokretljiv u odnosu na sondu (2) koja meri ugao vektora magnentne indukcije. Magnet (1) se u odnosu na sondu (2) kreće po zadatoj putanji (5). Kolo za obradu signala (3) određuje položaj magneta na osnovu informacije o uglu magnetne indukcije (4) dobijene merenjem pomoću sonde (2).

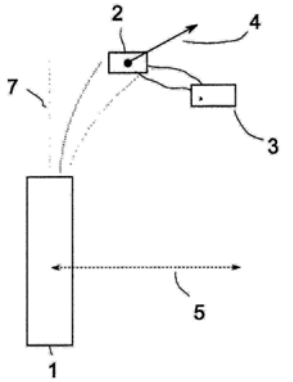


(54) POSITION SENSOR ON THE BASE OF MAGNETIC FIELD ON A STRAIGHT OR ON A CURVED PATH IN A PLANE

(57) Invention herewith described refers to the position sensor based on projection of magnetic field on the plane of measurement. The sensor for the position measuring consists of longitudinally magnetized magnet (1) of rectangular cross section which is movable in relation to the probe (2), which measures the angle of magnetic induction vector. The magnet, in relation to the probe (2), moves along a given path (5). The circuit for the signal processing (3) defines the position of the magnet on the basis of information on the angle of magnetic induction (4) obtained by measuring with the probe (2).

**(51)** ***G 01 K 13/02*** (2006.01) **(11) 2010/0350**
***G 01 K 17/08*** (2006.01) **(13) A**
***G 05 D 7/00*** (2006.01)
***C 21 B 7/10*** (2006.01)
***C 22 B 5/14*** (2006.01)
***G 01 F 1/00*** (2006.01)
***G 01 L 7/00*** (2006.01)
***G 01 L 9/00*** (2006.01)
***G 08 B 21/18*** (2006.01)
***F 27 D 9/00*** (2006.01)
***F 28 F 27/02*** (2006.01)
(21) P-2010/0350 (22) 04.02.2009.
(86) WO 04.02.2009. PCT/FI2009/050091
(87) WO 20.08.2009. WO 2009/101246
**(54) POSTUPAK I UREĐAJ ZA MERENJE NAJMANJE JEDNE FIZIČKE VELIČINE, KAO ŠTO JE TEMPERATURA, PROTOK ILI PRITISAK, RASHLADNOG FLUIDA KOJI PROTIČE KROZ ZASEBAN SEGMENT HLADNJAKA METALURŠKE PEĆI**
(71) OUTOTEC OYJ, Riihitontuntie 7, FI-02200 Espoo, FI
(72) SAARINEN, Risto, Niittykuja 2 A 25, FI-02200 Espoo, FI; PESONEN, Lauri, Pieni Roobertinkatu 4-6 L 63, FI-00130 Helsinki, FI
(74) ŽIVKOVIĆ, Zoran, Alekse Nenadovića 16, 11000 Beograd, RS

(57) Pronalazak se odnosi na postupak i uređaj za merenje najmanje jedne fizičke veličine, kao što je temperatura, protok ili pritisak, rashladnog fluida koji protiče kroz zasebni segment (3) hladnjaka (1) u metalurškoj peći. Uređaj obuhvata dovodni razvodnik (2) za distribuiranje rashladnog fluida i za njegovo uvođenje u segmente (3) hladnjaka (1) i sabirnik (4) za sakupljanje i prijem rashladnog fluida iz segmenata (3) hladnjaka (1). Uređaj obuhvata kontrolni vod (5) koji je posredstvom ventilskog sklopa (6) u fluidnoj vezi sa najmanje jednim segmentom (3) hladnjaka, tako da se rashladni fluid alternativno sprovodi kroz kontrolni vod (5) do sabirnika (4) ili pored kontrolnog voda (5) do sabirnika (4). Kontrolni vod (5) obuhvata najmanje jedan merni uređaj (7) za merenje najmanje jedne fizičke veličine rashladnog fluida koji protiče kroz kontrolni vod (5) i za merenje segmenta (3) hladnjaka.

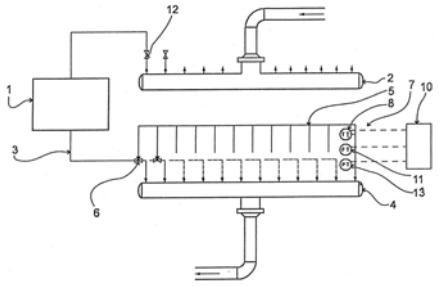

(54) METHOD AND ARRANGEMENT FOR MEASURING AT LEAST ONE PHYSICAL MAGNITUDE, SUCH AS TEMPERATURE, FLOW OR PRESSURE OF THE COOLING FLUID FLOWING IN AN INDIVIDUAL COOLING ELEMENT CYCLE OF A COOLING ELEMENT IN A METALLURGICAL FURNACE

(57) The invention relates to a method and arrangement for measuring at least one physical magnitude, such as temperature, flow or pressure of the cooling fluid flowing in an individual cooling element cycle (3) of a cooling element (1) in a metallurgical furnace. The arrangement includes a supply header (2) for distributing the cooling fluid and for feeding it to the cooling element cycles (3) of the cooling elements (1), and a collection header (4) for collecting and receiving cooling fluid from the cooling element cycles (3) of the cooling elements (1). The arrangement includes a survey line (5) that is by intermediation of a valve arrangement (6) in fluid connection with at least one cooling element cycle (3), so that the cooling fluid is conducted alternatively through the survey line (5) to the collection header (4) or past the survey line (5) to the collection header (4). The survey line (5) comprises at least one measuring device (7) for measuring at least one physical magnitude of the cooling fluid flowing in the survey line (5), and for measuring the cooling element cycle (3).

**(51)** ***G 01 R 19/04*** (2006.01) **(11) 2009/0533**
**(13) A**
(21) P-2009/0533 (22) 07.12.2009.
**(54) KOMPARATOR STRUJNOG OPTEREĆENJA**
(71) KRSTIĆ, Janko, bul. Zorana Đinđića 45, 11070 Novi Beograd, RS
(72) KRSTIĆ, Janko, bul. Zorana Đinđića 45, 11070 Novi Beograd, RS
(57) Pronalazak prati strujno-naponsku konverziju faza (RST) i registruje visinom napona na izlazima integrisanih kola (IK1 i IK2). Premoštavanjem električnog brojila ima za posledicu smanjenje napona na izlazu integrisanog kola (IK2) sa svojstvom operacionog pojačavača. Integrisano kolo (IK3) sa svojstvom komparatora, prati izlazne naponske nivoe integrisanoh kolla (IKl i IK2). Ako naponski nivoi nisu isti integrisano kolo (IK3) trigeruje (VCC) napon i preko elektromagnetnog prekidača (EMP) isključuje struju pomoću neutralnog provodnika (0).

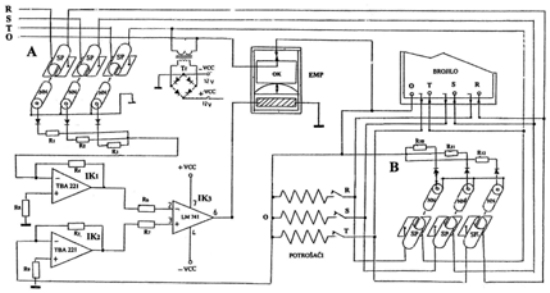

(54) ELECTRICAL LOAD COMPARATOR

(57) Invention herewith described monitors the current-to-voltage conversion phases (RST) and registers the voltage height of the output integrated circuits (IK1 and IK2). Bridging the electric meter has resulted in reduction in voltage at the integrated circuit (IK2) output as an operational amplifier. The integrated circuit (IK3) as a comparator, monitors the output voltage levels of integrated circuits (IK1 and IK2)). If their voltage levels are not the same, the integrated circuit (IK3) triggers (VCC) voltage and through the electromagnetic switches (EMP) cuts-off electricity with the neutral conductor (0).

**(51)** ***G 01 R 3/00*** (2006.01) **(11) 2009/0475**
***G 01 R 33/032*** (2006.01) **(13) A**
***G 01 R 1/38*** (2006.01)
(21) P-2009/0475 (22) 30.10.2009.
**(54) TEMPERATURNO KOMPENZOVANA FIBEROPTIČKA MERNA GLAVA ZA MERENJE I MONITORING STRUJA NA STANDARDNIM SABIRNICAMA**
(71) HADŽIĆ, Miodrag, Resavska 58, 11000 Beograd, RS
(72) HADŽIĆ, Miodrag, Resavska 58, 11000 Beograd, RS

(57) Pronalazak spada u oblast električne meme opreme, koja sadrži korektore grešaka a konkretno se odnosi na temperaturno kompenzovana merna glava za merenje i monitoring struja na standardnim sabirnicama. Pronalaskom je rešena konstrukcija merne glave kojom se vrše precizna merenja struja srednjih i visokih napona na svim standardnim sabirnicama do 100 x 10 mm. Ovo je ostvareno tako što predmetnu mernu glavu čine u visokootpornu plastiku oklopljeni nosač (1) optičkih kablova (2 i 2') i kućište (6) magnetnog koncentratora, posebno oblikovan magnetni koncentrator (7) sa dvosegmentnom stranicom (29) i kućište (48) magnetooptičkog kristala (44) sa podsklopom koji sadrži puž (64) za promenu ugla analizatora (68 i 68') i blendu (49) sa dva otvora (70 i 70'). Podešavanjem ugla analizatora (68 i 68') omogućen je izbor radne tačke merne glave čime se kompenzuje uticaj temperature na mernu glavu.

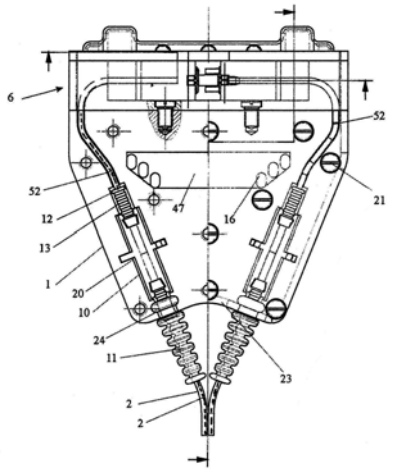


(54) TEMPERATURE COMPENSATED FIBRE OPTIC MEASURING HEAD FOR MEASURING AND MONITORING CURRENTS AT STANDARD BUS BARS

(57) Invention herewith described belongs to the field of electrical measuring equipment including error correctors and specifically refers to the temperature compensated fibre optic measuring head for measuring and monitoring currents at standard bus bars. The invention solves the design of the measuring which performs accurate measurements of high and medium voltage currents at all standard buses up to 100 x 10 mm. This is accomplished by producing the subject measuring head consisting of holder (1) shielded in plastic of high resistance, optical cables (2 and 2') and the housing (6) of the magnetic concentrator, specially designed magnetic concentrator (7) with a two-segmented side (29) and the housing (48) of the magneto-optic crystal (44) with a sub-assembly comprising the worm gear (64) for changing the angle of the analyzer (68 and 68') and aperture (49) with two holes (70 and 70'). Adjustment of the angle of the analyzer (68 and 68') allows the choice of the measuring head working point thus compensating for the impact of temperature on the measuring head.

**(51)** ***H 01 F 27/28*** (2006.01) **(11) 2009/0488**
**(13) A**
(21) P-2009/0488 (22) 09.11.2009.

**(54) ENERGETSKI TRANSFORMATOR REDUKOVANE ELEKTROMOTORNE SILE SA NAMOTAJIMA OD ALUMINIJUMA**

(71) ISIDOROVIĆ, Ratko, Pere Segedinca 7, 11000 Beograd, RS; ISIDOROVIĆ, Janko, Pere Segedinca 7, 11000 Beograd, RS; ISIDOROVIĆ, Ksenija, Pere Segedinca 7, 11000 Beograd, RS

(72) ISIDOROVIĆ, Ratko, Pere Segedinca 7, 11000 Beograd, RS; ISIDOROVIĆ, Janko, Pere Segedinca 7, 11000 Beograd, RS; ISIDOROVIĆ, Ksenija, Pere Segedinca 7, 11000 Beograd, RS

(57) Elektromotorna sila transformatora je redukovana pošto su namotaji od aluminijuma a ne od bakra. Redukovanje je saglasno odnosu specifičnih električnih otpora i odnosu specifičnih masa bakra i aluminijuma i uticaju izolacije provodnika. Otuda su namotaji višeg napona (1) i namotaji nižeg napona (2) sa većim brojem navojaka od aluminijuma. Postavljeni su na stubove (3) magnetnog jezgra spojena jarmovima (4). Magnetno jezgro je manjeg preseka, saglasno manjoj elektromotornoj sili po navojku. Materijal namotaja, aluminijum, manja.masa magnetnog jezgra i manji gubici aktivne energije u jezgru čine transformator ekonomičnijim od transformatora sa namotajima od bakra. U varijanti sa magnetnim kolom nekontinualnog preseka se gubici aktivne energije u magnetnom jezgru transformatora dalje smanjuju, ali se povečava masa magnetnog jezgra.

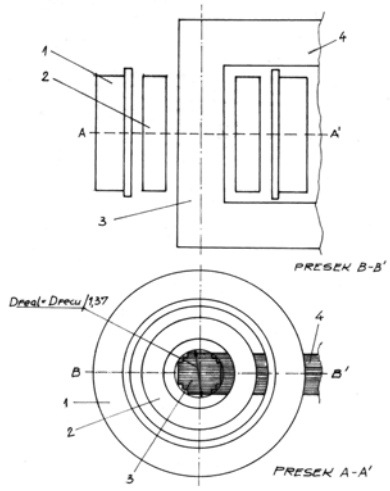

(54) POWER TRANSFORMER OF REDUCED ELECTROMOTIVE FORCE WITH ALUMINIUM WINDINGS

(57) Invention herewith described refers to the power transformer of reduced electromotive force with aluminium windings. The transformer electromotive force is reduced because the windings are made of aluminium instead of copper. The reduction is in agreement with the specific electrical resistance ratio and the ratio of the copper and aluminium specific gravity and the effect of conductor insulation. Hence, the high-voltage windings (1) and low-voltage windings (2) have greater number of aluminium windings. They are mounted on the (3) magnetic core poles linked with yokes (4). The magnetic core is a small section, in accordance with a lesser force at electromotive force per a winding. Material of the winding, aluminium, smaller mass of the magnetic core as well as smaller losses of active power in the core make this transformer more economical than the transformer with the copper windings. In the version with the magnetic circuit of discontinuous cross section, the active power losses in the magnetic core of the transformer are still decreasing, but the mass of the magnetic core is increasing.

**(51)** ***H 01 G 15/00*** (2006.01) **(11) 2010/0539**
***H 01 G 17/00*** *(2006.01)* **(13) A**
(21) P-2010/0539 (22) 10.12.2010.
**(54) KOMBINOVANI ANTIREZONANTNI FILTRI U KONDENZATORSKIM BATERIJAMA ZA KOMPENZACIJU REAKTIVNE ENERGIJ**
(71) KOSTIĆ, Miloje, Dragana Rakića 53, 11000 Beograd, RS
(72) KOSTIĆ, Miloje, Dragana Rakića 53, 11000 Beograd, RS
(57) Kombinovani antirezonantni filtri u kondenzatorskim baterijama za kompenzaciju reaktivne energije u električnim mrežama sa višim harmonicima se sastoje od dve vrste antirezonantnih filtara (sekcija kondenzator/prigušnica), npr:
- grupe paralelnih sekcija sa fr= 189 Hz, tj. sa reaktansom redne prigušnice p=7 %, i
- grupe paralelnih sekcija sa fr = 213 Hz, tj. sa reaktansom redne prigušnice p=5.5 %. Reaktansa sekcija kondenzatora sa prigušnicama p=5.5 %, za 5. harmonik, je manja za dva puta, pa je apsorpciona moć ovih filtara i celokupne baterije kondenzatora povećana. To ima za posledicu da se struje 5. harmonika, koje odlaze u mrežu, znatnije smanjuju pa time i harmonijska distorzija napona postaje niža. Tako je ona, u razmatranom slučaju, smanjena na bezbednu vrednost THD(U) ≈4% sa visoke početne vrednosti THD(U)=10.2%. To je i najveća prednost kondenzatorskih baterija, koje se sastoje od kombinovanih antirezonantnih filtara.

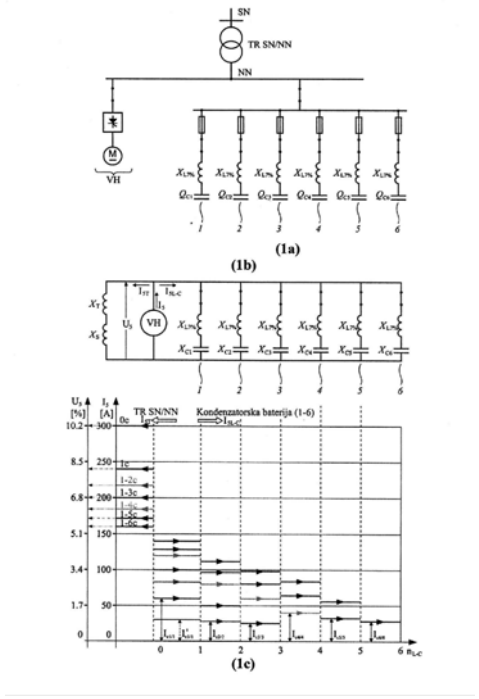


(54) COMBINED ANTI-RESONANT FILTERS IN CAPACITOR BATTERIES FOR REACTIVE POWER COMPENSATION

(57) Invention herewith described refers to the combined anti-resonant filters in the capacitor batteries for reactive power compensation in electrical networks with higher harmonics consisting of two types of anti-resonant filters (section capacitor/choke), for example:
- groups of parallel sections with fr = 189 Hz, i.e. with a serial choke reactance p = 7%, and
- groups of parallel sections with fr = 213 Hz, i.e. with a serial choke reactance p = 5.5%. The reactance section of the capacitors with chokes p = 5.5%, for the fifth harmonic is two times smaller, and the absorption power of these filters and of the capacitor complete battery is increased. As a consequence, the currents of the fifth harmonic, which go into the network, are significantly reduced and, therefore, the harmonic voltage distortion becomes lower. So it is, in the considered case, reduced to a safe value of THD (U) ≈ 4% from the high initial value of THD (U) = 10.2%. This is the biggest advantage of the capacitor batteries consisting of the combined anti-resonant filters.

**(51)** ***H 02 J 3/00*** (2006.01) **(11) 2009/0487**
**(13) A**
(21) P-2009/0487 (22) 09.11.2009.
**(54) MAŠINA SA TALASOM POTENCIJALA**
(71) ISIDOROVIĆ, Ratko, Pere Segedinca 7, 11000 Beograd, RS; ISIDOROVIĆ, Janko, Pere Segedinca 7, 11000 Beograd, RS; ISIDOROVIĆ, Ksenija, Pere Segedinca 7, 11000 Beograd, RS

(72) ISIDOROVIĆ, Ratko, Pere Segedinca 7, 11000 Beograd, RS; ISIDOROVIĆ, Janko, Pere Segedinca 7, 11000 Beograd, RS; ISIDOROVIĆ, Ksenija, Pere Segedinca 7, 11000 Beograd, RS

(57) Za nemagnetni omotač (1) su pričvršćena magnetna kola (2) oblika E sa namotajima (3). Na osovini (17) se nalazi izolacioni nosač (16) sa prostorom (18) za smeštaj navojaka (7) namotaja (8). Za izolacioni nosač (16) je fiksiran magnetni prsten (4) sa žlebovima (5) prema međugvožđu (6). U žlebovima (5) se nalazi jedan navojak (7) namotaja (8) kroz koji se kreće talas potencijala. Namotaj (8) je provodnicima (9) povezan sa lamelama (10) kolektora (11) na koji naležu četkice (12) u držačima (13). Mašina je univerzalna i kada radi kao generator ima konstantnu frekvenciju 50 Hz, pošto energiju za stvarane magnetnog polja, pobudu, uzima iz mreže, kojoj predaje svoju snagu. Otuda je pogodna za pretvaranje promenljive mehaničke energije u električnu, naprimer turbine na vetar i slično.

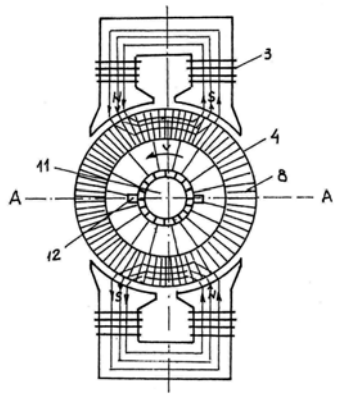


(54) MACHINE WITH A WAVE OF POTENTIAL

(57) Invention herewith described refers to the machine with a wave of potential. To a non-magnetic case (a) there are attached E shaped magnetic circuits (2) with coils (3). On the axle (17) there is an insulating bracket (16) with space (18) to accommodate threads (7) of the coils (8). To the insulating bracket (16) there is fixed a magnetic ring (4) with grooves (5) towards the air gap (6). In the grooves (5) there is one thread (7) of the coil (8) through which moves the wave of potential. The coil (8) is through the conductors (9) connected to the coupling (10) of the collector (11) on which rest the brushes (12) in holders (13). The machine is universal and when works as a generator it has a constant frequency of 50 Hz, since the energy to create a magnetic field, the excitation, takes from the network to which it transfers its power. Hence it is suitable for converting the variable mechanical energy into electrical energy, e.g. wind turbines and the like.

**(51)** ***H 02 K 37/00*** (2006.01) **(11) 2009/0544**
**(13) A**
(21) P-2009/0544 (22) 14.12.2009.

**(54) ELEKTROMOTOR ZA UPRAVLJANJE POLOŽAJEM I NAČIN NJEGOVE PROIZVODNJE**

(71) JERANČE, Nikola, dr, Seljačkih buna 1, 21000 Novi Sad, RS
(72) JERANČE, Nikola, dr, Seljačkih buna 1, 21000 Novi Sad, RS

(57) Elektromotor koji ima normalnu komponentu magnetske indukcije na površini rotora koja sadrži harmonike reda 1, 2, ... $2^k$ ... do $2^N$, gde su k i N prirodni brojevi, poseduje statorski namot (2) koji može da proizvede broj parova polova magnetske indukcije u zazoru (4) jednak redu harmonika magnetske indukcije na rotoru. Delovi (11, 12, 13, 14, 15, 16, 17 i 18) stalnog magneta rotora su namagnetisani tako da svaki deo ima jedinstvenu kombinaciju pozitivnih i negativnih vrednosti harmonika magnetizacije.

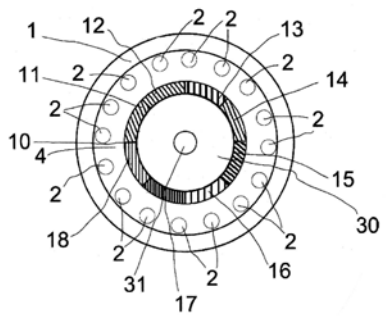


(54) ELECTRIC MOTOR FOR POSITION CONTROL AND METHOD FOR ITS PRODUCTION

(57) Invention herewith described refers to the electric motor for position control and the method for its production. The electric motor has a normal component of magnetic induction on the surface of the rotor that contains harmonics of order 1, 2, ... $2^k$... to $2^N$, where k and N are integers, and a stator winding (2) that can produce a number of pairs of poles of magnetic induction in the clearance (4) equal to the order of harmonics of magnetic induction on the rotor. The parts (11, 12, 13, 14, 15, 16, 17 and 18) of the rotor permanent magnet are so magnetized that each part has a unique combination of positive and negative values of magnetization harmonics.

**(51)** ***H 04 B 10/00*** (2006.01) **(11) 2009/0195**
**(13) A**
(21) P-2009/0195 (22) 23.04.2009.

**(54) UREĐAJ ZA PRENOS PODATAKA U LOKALNIM RAČUNARSKIM MREŽAMA PUTEM INFRACRVENIH TALASA**

(71) ĐURIĆ, Dobrivoje, General Horvatovića 23, 11000 Beograd, RS

(72) ĐURIĆ, Dobrivoje, General Horvatovića 23, 11000 Beograd, RS

(57) Infracrveni uređaj je postavljen na konektor RJ-45, koji se priključuje na mrežnu kartu računara i drugu mrežnu opremu. Uloga infracrvenog uređaja je zamena UTP kabla u prenosu podataka kroz lokalnu računarsku mrežu u uslovima kada se povezivanje ostvaruje u prostoru koji nije optički izolovan.

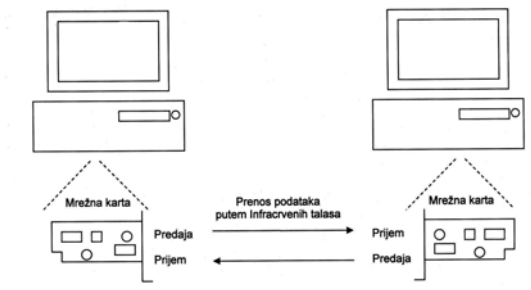


(54) DEVICE FOR DATA TRANSMISSION OVER LOCAL AREA NETWORK (LAN) VIA INFRARED WAVES

(57) Invention herewith described refers to the device for data transmission over local area network (LAN) via infrared waves put on the RJ-45 connector, which plugs into the computer network card and other network equipment. The role of the infrared device is to replace UTP cable in data transfer through the local computer network (LCN) in conditions when the connection is realized in a not optically isolated space.

## ИСПРАВКА

**I** Извршити допуну података у Обавештењу о објави бр. 2010/5422 П-2010/0109 од 04.06.2010. године, у пријави патената заведеној код Завода за интелектуалну својину под бр. П-2010/0109 дана 11.03.2010. са признатим датумом подношења 22.10.1999. године, тако што

- **у рубрику (62) „број првобитне пријаве“** треба уписати следећи број:

**" П-301/02"**

# ИНДЕКСНЕ ТАБЕЛЕ ЗА ПРИЈАВЕ ПАТЕНАТА
# INDEX TABLES FOR PATENT APPLICATIONS


- **ИНДЕКС ПОДНОСИЛАЦА ПРИЈАВА ПАТЕНАТА (стр. 2283)**
- APPLICANTS NAME INDEX (p. 2283)

- **ИНДЕКС БРОЈЕВА ПРИЈАВА ПАТЕНАТА (стр. 2287)**
- APPLICATIONS NUMBER INDEX (p. 2287)

- **ИНДЕКС ОБЈАВЉЕНИХ ПРИЈАВА ПАТЕНАТА ПРЕМА МКП (стр. 2289)**
- INDEX OF PATENT APPLICATIONS ACCORDING TO IPC (p. 2289 )

## ИНДЕКС ПОДНОСИЛАЦА ПРИЈАВА ПАТЕНАТА

APPLICANTS NAME INDEX

| (71) | (51) | | (21) |
|---|---|---|---|
| AGROTEKA SZGR | ***E 03 F 7/04*** | (2006.01) | P-2009/0479 |
| | ***E 03 F 7/06*** | (2006.01) | |
| | ***F 16 L 29/00*** | (2006.01) | |
| ANHEUSER-BUSCH INBEV S.A. | ***C 12 C 3/12*** | (2006.01) | P-2010/0192 |
| | ***C 12 C 7/20*** | (2006.01) | |
| | ***C 12 C 7/24*** | (2006.01) | |
| BIOGEN IDEC MA INC. | ***A 61 K 39/395*** | (2006.01) | P-2011/0024 |
| | ***C 07 K 16/00*** | (2006.01) | |
| | ***C 07 K 16/18*** | (2006.01) | |
| | ***C 07 K 16/30*** | (2006.01) | |
| | ***C 07 K 16/46*** | (2006.01) | |
| BJELAJAC, Bojan | ***C 04 B 7/02*** | (2006.01) | P-2009/0386 |
| | ***C 04 B 16/02*** | (2006.01) | |
| BLAGOJEVICA D.O.O. | ***B 65 F 1/12*** | (2006.01) | P-2009/0493 |
| CEROVINA, Andrija | ***F 26 B 9/00*** | (2006.01) | P-2009/0431 |
| | ***A 23 N 12/08*** | (2006.01) | |
| CRYSTAL LAGOONS CORPORATION LLC | ***B 01 D 21/01*** | (2006.01) | P-2010/0438 |
| ĐURIĆ, Dobrivoje | ***H 04 B 10/00*** | (2006.01) | P-2009/0195 |
| GALENIKA A.D. | ***A 61 K 9/08*** | (2006.01) | P-2009/0393 |
| | ***A 61 K 31/435*** | (2006.01) | |
| | ***A 61 K 31/445*** | (2006.01) | |
| GRUJIČIĆ, Velimir | ***A 61 B 5/107*** | (2006.01) | P-2009/0531 |
| | ***G 01 B 11/16*** | (2006.01) | |
| | ***A 43 D 1/02*** | (2006.01) | |
| HADŽIĆ, Miodrag | ***G 01 R 3/00*** | (2006.01) | P-2009/0475 |
| | ***G 01 R 33/032*** | (2006.01) | |
| | ***G 01 R 1/38*** | (2006.01) | |
| HARBIN INSTITUTE OF TECHNOLOGY | ***F 23 C 5/08*** | (2006.01) | P-2010/0550 |
| | ***F 23 C 7/00*** | (2006.01) | |
| HOĆANIN, Harun | ***D 03 D 43/04*** | (2006.01) | P-2010/0026 |
| | ***D 03 D 49/34*** | (2006.01) | |
| INSTITUT ZA TEHNOLOGIJU NUKLEARNIH I DRUGIH MINERALNIH SIROVINA | ***A 23 K 1/175*** | (2006.01) | P-2009/0434 |
| ISIDOROVIĆ, Ratko; ISIDOROVIĆ, Janko and ISIDOROVIĆ, Ksenija | ***H 02 J 3/00*** | (2006.01) | P-2009/0487 |
| ISIDOROVIĆ, Ratko; ISIDOROVIĆ, Janko and ISIDOROVIĆ, Ksenija | ***H 01 F 27/28*** | (2006.01) | P-2009/0488 |

| (71) | (51) | (21) |
|---|---|---|
| JAKIMOVSKI, Saša | ***F 23 L 17/02*** (2006.01)<br>***F 23 L 17/10*** (2006.01)<br>***F 23 L 17/08*** (2006.01) | P-2009/0467 |
| JERANČE, Nikola, dr. | ***G 01 D 5/14*** (2006.01) | P-2009/0542 |
| JERANČE, Nikola, dr. | ***G 01 D 5/14*** (2006.01) | P-2009/0543 |
| JERANČE, Nikola, dr. | ***H 02 K 37/00*** (2006.01) | P-2009/0544 |
| JEREMIĆ, M. Branislav, prof. dr.; ARSENIJEVIĆ, N. Slobodan. prof. dr. and TODOROVIĆ, M. Petar, doc. dr. | ***A 61 B 5/00*** (2006.01)<br>***A 61 B 5/0245*** (2006.01)<br>***A 61 B 5/0215*** (2006.01) | P-2009/0196 |
| KALEZIĆ, Momčilo and NIKOLIĆ, Sreten | ***F 02 C 1/02*** (2006.01)<br>***F 02 K 3/00*** (2006.01) | P-2009/0526 |
| KORALI D.O.O. | ***B 65 F 1/06*** (2006.01) | P-2010/0174 |
| KOSTIĆ, Miloje | ***H 01 G 15/00*** (2006.01)<br>***H 01 G 17/00*** (2006.01) | P-2010/0539 |
| KRSTIĆ, Janko | ***G 01 R 19/04*** (2006.01) | P-2009/0533 |
| MARKOVIĆ, Dušan, dipl. ing.; MAĆEJ, Ognjen, prof. dr.; MANČIĆ, Saša, dipl.oecc and GRUBOR, Petar, dipl. ing. | ***A 01 J 11/00*** (2006.01)<br>***A 01 J 9/00*** (2006.01)<br>***A 23 C 3/00*** (2006.01)<br>***A 23 C 23/00*** (2006.01)<br>***A 01 J 99/00*** (2006.01) | P-2009/0340 |
| MEDAREX INC. and AMGEN INC. | ***A 61 K 39/395*** (2006.01)<br>***C 07 K 16/22*** (2006.01)<br>***G 01 N 33/53*** (2006.01)<br>***C 12 N 15/68*** (2006.01)<br>***C 12 N 5/10*** (2006.01)<br>***A 61 P 25/00*** (2006.01)<br>***A 61 P 35/00*** (2006.01) | P-2010/0555 |
| MEDIĆ, Dragana | ***A 23 C 20/00*** (2006.01)<br>***A 23 C 19/055*** (2006.01) | P-2009/0442 |
| MILIĆEVIĆ, Draško | ***A 24 F 13/00*** (2006.01)<br>***A 24 F 47/00*** (2006.01)<br>***A 24 F 19/00*** (2006.01) | P-2009/0480 |
| MILIĆEVIĆ, Draško | ***A 42 B 1/18*** (2006.01)<br>***A 45 B 11/04*** (2006.01) | P-2009/0539 |
| MILIĆEVIĆ, Draško | ***A 42 B 1/18*** (2006.01)<br>***A 45 B 11/08*** (2006.01) | P-2009/0540 |
| MILIĆEVIĆ, Mitar, dipl. maš. inž.; MILIĆEVIĆ. Olivera, dipl. maš. inž. and MILIĆEVIĆ, Ivan | ***F 03 D 11/04*** (2006.01) | P-2009/0409 |
| MILOSAVLJEVIĆ, Milutin, dr. dipl. inž.; MARINKOVIĆ, D. Aleksandar, dr. dipl. inž.; MILENKOVIĆ, Dragan, dr. dipl. inž.; MARINKOVIĆ, Milan, dipl. inž. and PETROVIĆ, D. Slobodan, prof. dr. dipl. inž. | ***C 07 C 333/16*** (2006.01)<br>***C 07 F 3/06*** (2006.01) | P-2009/0555 |

| (71) | (51) | (21) |
|---|---|---|
| MILOSAVLJEVIĆ, Milutin, dr. dipl. inž.; MARINKOVIĆ, D. Aleksandar, dr. dipl. inž.; MARINKOVIĆ, Milan, dipl. inž.; PETROVIĆ, D. Slobodan, prof. dr. dipl. inž. and DAŠIĆ, Predrag, mr. dipl. inž. | ***C 07 C 333/04*** (2006.01) | P-2009/0556 |
| NBS-ZAVOD ZA IZRADU NOVČANICA I KOVANOG NOVCA-TOPČIDER | ***B 42 D 15/10*** (2006.01) | P-2009/0464 |
| OBSHESTVO S OGRANICHENNOY OTVETSTVENNOCTYU 'BISOL BI-INTER' | ***C 05 F 11/08*** (2006.01)<br>***C 12 N 1/20*** (2006.01)<br>***C 12 N 1/14*** (2006.01) | P-2010/0244 |
| OUTOTEC OYJ | ***G 01 K 13/02*** (2006.01)<br>***G 01 K 17/08*** (2006.01)<br>***G 05 D 7/00*** (2006.01)<br>***C 21 B 7/10*** (2006.01)<br>***C 22 B 5/14*** (2006.01)<br>***G 01 F 1/00*** (2006.01)<br>***G 01 L 7/00*** (2006.01)<br>***G 01 L 9/00*** (2006.01)<br>***G 08 B 21/18*** (2006.01)<br>***F 27 D 9/00*** (2006.01)<br>***F 28 F 27/02*** (2006.01) | P-2010/0350 |
| PAUNOVIĆ, Nenad | ***B 60 K 6/00*** (2007.01)<br>***B 60 W 20/00*** (2006.01) | P-2009/0453 |
| PETROVIĆ, Slaviša and SLIJEPČEVIĆ, Anđelka | ***A 47 D 1/02*** (2006.01)<br>***A 47 C 4/02*** (2006.01)<br>***A 47 D 11/00*** (2006.01) | P-2009/0507 |
| RADOVANOVIĆ, Tomislav | ***B 01 D 47/02*** (2006.01) | P-2009/0072 |
| RADOVANOVIĆ, Tomislav | ***F 03 D 9/02*** (2006.01)<br>***F 03 D 9/00*** (2006.01)<br>***F 03 G 7/08*** (2006.01)<br>***F 03 G 7/00*** (2006.01) | P-2009/0129 |
| RETRACTABLE TEHCNOLOGIES, INC. | ***A 61 M 5/34*** (2006.01)<br>***A 61 M 5/178*** (2006.01)<br>***A 61 M 5/50*** (2006.01) | P-2010/0354 |
| RISTIĆ, Ivana | ***E 05 B 29/00*** (2006.01) | P-2009/0418 |
| SCHERING AKTIENGESELLSCHAFT | ***C 12 P 33/10*** (2006.01)<br>***C 12 P 33/16*** (2006.01)<br>***C 07 J 1/00*** (2006.01)<br>***C 07 J 3/00*** (2006.01)<br>***C 07 J 5/00*** (2006.01)<br>***C 07 J 7/00*** (2006.01)<br>***C 07 J 9/00*** (2006.01)<br>***C 07 J 11/00*** (2006.01)<br>***C 07 J 31/00*** (2006.01)<br>***C 07 J 41/00*** (2006.01)<br>***A 61 K 31/56*** (2006.01) | P-2011/0079 |
| SMS SIEMAG AG | ***B 01 J 3/00*** (2006.01)<br>***B 01 J 3/03*** (2006.01)<br>***C 23 C 14/54*** (2006.01)<br>***C 23 C 14/56*** (2006.01)<br>***B 01 J 19/22*** (2006.01) | P-2010/0167 |

| (71) | (51) | | (21) |
|---|---|---|---|
| SMS SIEMAG AG | ***B 21 B 15/00*** | (2006.01) | P-2010/0242 |
| | ***B 23 K 37/04*** | (2006.01) | |
| SPASOVIĆ, Slobodan | ***F 22 B 3/02*** | (2006.01) | P-2009/0398 |
| | ***F 28 D 20/00*** | (2006.01) | |
| | ***F 24 H 7/00*** | (2006.01) | |
| STOJANOVIK, Petkov, Jasna | ***A 61 F 13/66*** | (2006.01) | P-2010/0500 |
| STREČANOVIĆ, Dragiša | ***F 03 G 3/00*** | (2006.01) | P-2009/0561 |
| | ***F 03 G 7/08*** | (2006.01) | |
| | ***F 03 G 7/10*** | (2006.01) | |
| UDRUŽENJE TIM EKSPERATA ZASTAVE KRAGUJEVAC | ***B 60 L 9/02*** | (2006.01) | P-2009/0560 |
| | ***B 60 L 11/00*** | (2006.01) | |
| VOJNOTEHNIČKI INSTITUT | ***A 62 C 27/00*** | (2006.01) | P-2009/0416 |
| VUKIĆEVIĆ, Slavka; VUKIĆEVIĆ, Živojin; BURNS-BENIĆ, Olivera and BURNS-BENIĆ, Ema | ***B 60 L 11/18*** | (2006.01) | P-2009/0473 |

## ИНДЕКС БРОЈЕВА ПРИЈАВА ПАТЕНАТА

APPLICATIONS NUMBER INDEX

| (21) | (51) |
|---|---|
| P-2009/0072 | ***B 01 D 47/02*** (2006.01) |
| P-2009/0129 | ***F 03 D 9/02*** (2006.01)<br>***F 03 D 9/00*** (2006.01)<br>***F 03 G 7/08*** (2006.01)<br>***F 03 G 7/00*** (2006.01) |
| P-2009/0195 | ***H 04 B 10/00*** (2006.01) |
| P-2009/0196 | ***A 61 B 5/00*** (2006.01)<br>***A 61 B 5/0245*** (2006.01)<br>***A 61 B 5/0215*** (2006.01) |
| P-2009/0340 | ***A 01 J 11/00*** (2006.01)<br>***A 01 J 9/00*** (2006.01)<br>***A 23 C 3/00*** (2006.01)<br>***A 23 C 23/00*** (2006.01)<br>***A 01 J 99/00*** (2006.01) |
| P-2009/0386 | ***C 04 B 7/02*** (2006.01)<br>***C 04 B 16/02*** (2006.01) |
| P-2009/0393 | ***A 61 K 9/08*** (2006.01)<br>***A 61 K 31/435*** (2006.01)<br>***A 61 K 31/445*** (2006.01) |
| P-2009/0398 | ***F 22 B 3/02*** (2006.01)<br>***F 28 D 20/00*** (2006.01)<br>***F 24 H 7/00*** (2006.01) |
| P-2009/0409 | ***F 03 D 11/04*** (2006.01) |
| P-2009/0416 | ***A 62 C 27/00*** (2006.01) |
| P-2009/0418 | ***E 05 B 29/00*** (2006.01) |
| P-2009/0431 | ***F 26 B 9/00*** (2006.01)<br>***A 23 N 12/08*** (2006.01) |
| P-2009/0434 | ***A 23 K 1/175*** (2006.01) |
| P-2009/0442 | ***A 23 C 20/00*** (2006.01)<br>***A 23 C 19/055*** (2006.01) |
| P-2009/0453 | ***B 60 K 6/00*** (2007.01)<br>***B 60 W 20/00*** (2006.01) |
| P-2009/0464 | ***B 42 D 15/10*** (2006.01) |
| P-2009/0467 | ***F 23 L 17/02*** (2006.01)<br>***F 23 L 17/10*** (2006.01)<br>***F 23 L 17/08*** (2006.01) |
| P-2009/0473 | ***B 60 L 11/18*** (2006.01) |

| (21) | (51) |
|---|---|
| P-2009/0475 | ***G 01 R 3/00*** (2006.01)<br>***G 01 R 33/032*** (2006.01)<br>***G 01 R 1/38*** (2006.01) |
| P-2009/0479 | ***E 03 F 7/04*** (2006.01)<br>***E 03 F 7/06*** (2006.01)<br>***F 16 L 29/00*** (2006.01) |
| P-2009/0480 | ***A 24 F 13/00*** (2006.01)<br>***A 24 F 47/00*** (2006.01)<br>***A 24 F 19/00*** (2006.01) |
| P-2009/0487 | ***H 02 J 3/00*** (2006.01) |
| P-2009/0488 | ***H 01 F 27/28*** (2006.01) |
| P-2009/0493 | ***B 65 F 1/12*** (2006.01) |
| P-2009/0507 | ***A 47 D 1/02*** (2006.01)<br>***A 47 C 4/02*** (2006.01)<br>***A 47 D 11/00*** (2006.01) |
| P-2009/0526 | ***F 02 C 1/02*** (2006.01)<br>***F 02 K 3/00*** (2006.01) |
| P-2009/0531 | ***A 61 B 5/107*** (2006.01)<br>***G 01 B 11/16*** (2006.01)<br>***A 43 D 1/02*** (2006.01) |
| P-2009/0533 | ***G 01 R 19/04*** (2006.01) |
| P-2009/0539 | ***A 42 B 1/18*** (2006.01)<br>***A 45 B 11/04*** (2006.01) |
| P-2009/0540 | ***A 42 B 1/18*** (2006.01)<br>***A 45 B 11/08*** (2006.01) |
| P-2009/0542 | ***G 01 D 5/14*** (2006.01) |
| P-2009/0543 | ***G 01 D 5/14*** (2006.01) |
| P-2009/0544 | ***H 02 K 37/00*** (2006.01) |
| P-2009/0555 | ***C 07 C 333/16*** (2006.01)<br>***C 07 F 3/06*** (2006.01) |
| P-2009/0556 | ***C 07 C 333/04*** (2006.01) |
| P-2009/0560 | ***B 60 L 9/02*** (2006.01)<br>***B 60 L 11/00*** (2006.01) |
| P-2009/0561 | ***F 03 G 3/00*** (2006.01)<br>***F 03 G 7/08*** (2006.01)<br>***F 03 G 7/10*** (2006.01) |

| (21) | (51) |
|---|---|
| P-2010/0026 | ***D 03 D 43/04*** (2006.01) |
| | ***D 03 D 49/34*** (2006.01) |
| P-2010/0167 | ***B 01 J 3/00*** (2006.01) |
| | ***B 01 J 3/03*** (2006.01) |
| | ***C 23 C 14/54*** (2006.01) |
| | ***C 23 C 14/56*** (2006.01) |
| | ***B 01 J 19/22*** (2006.01) |
| P-2010/0174 | ***B 65 F 1/06*** (2006.01) |
| P-2010/0192 | ***C 12 C 3/12*** (2006.01) |
| | ***C 12 C 7/20*** (2006.01) |
| | ***C 12 C 7/24*** (2006.01) |
| P-2010/0242 | ***B 21 B 15/00*** (2006.01) |
| | ***B 23 K 37/04*** (2006.01) |
| P-2010/0244 | ***C 05 F 11/08*** (2006.01) |
| | ***C 12 N 1/20*** (2006.01) |
| | ***C 12 N 1/14*** (2006.01) |
| P-2010/0350 | ***G 01 K 13/02*** (2006.01) |
| | ***G 01 K 17/08*** (2006.01) |
| | ***G 05 D 7/00*** (2006.01) |
| | ***C 21 B 7/10*** (2006.01) |
| | ***C 22 B 5/14*** (2006.01) |
| | ***G 01 F 1/00*** (2006.01) |
| | ***G 01 L 7/00*** (2006.01) |
| | ***G 01 L 9/00*** (2006.01) |
| | ***G 08 B 21/18*** (2006.01) |
| | ***F 27 D 9/00*** (2006.01) |
| | ***F 28 F 27/02*** (2006.01) |
| P-2010/0354 | ***A 61 M 5/34*** (2006.01) |
| | ***A 61 M 5/178*** (2006.01) |
| | ***A 61 M 5/50*** (2006.01) |
| P-2010/0438 | ***B 01 D 21/01*** (2006.01) |

| (21) | (51) |
|---|---|
| P-2010/0500 | ***A 61 F 13/66*** (2006.01) |
| P-2010/0539 | ***H 01 G 15/00*** (2006.01) |
| | ***H 01 G 17/00*** (2006.01) |
| P-2010/0550 | ***F 23 C 5/08*** (2006.01) |
| | ***F 23 C 7/00*** (2006.01) |
| P-2010/0555 | ***A 61 K 39/395*** (2006.01) |
| | ***C 07 K 16/22*** (2006.01) |
| | ***G 01 N 33/53*** (2006.01) |
| | ***C 12 N 15/68*** (2006.01) |
| | ***C 12 N 5/10*** (2006.01) |
| | ***A 61 P 25/00*** (2006.01) |
| | ***A 61 P 35/00*** (2006.01) |
| P-2011/0024 | ***A 61 K 39/395*** (2006.01) |
| | ***C 07 K 16/00*** (2006.01) |
| | ***C 07 K 16/18*** (2006.01) |
| | ***C 07 K 16/30*** (2006.01) |
| | ***C 07 K 16/46*** (2006.01) |
| P-2011/0079 | ***C 12 P 33/10*** (2006.01) |
| | ***C 12 P 33/16*** (2006.01) |
| | ***C 07 J 1/00*** (2006.01) |
| | ***C 07 J 3/00*** (2006.01) |
| | ***C 07 J 5/00*** (2006.01) |
| | ***C 07 J 7/00*** (2006.01) |
| | ***C 07 J 9/00*** (2006.01) |
| | ***C 07 J 11/00*** (2006.01) |
| | ***C 07 J 31/00*** (2006.01) |
| | ***C 07 J 41/00*** (2006.01) |
| | ***A 61 K 31/56*** (2006.01) |

## ИНДЕКС ОБЈАВЉЕНИХ ПРИЈАВА ПАТЕНАТА ПРЕМА МКП

INDEX OF PATENT APPLICATIONS ACCORDING TO IPC

| (51) | | (21) |
|---|---|---|
| ***A 01 J 9/00*** | (2006.01) | P-2009/340 |
| ***A 01 J 99/00*** | (2006.01) | P-2009/340 |
| ***A 23 C 3/00*** | (2006.01) | P-2009/340 |
| ***A 23 C 19/055*** | (2006.01) | P-2009/442 |
| ***A 23 C 20/00*** | (2006.01) | P-2009/442 |
| ***A 23 C 23/00*** | (2006.01) | P-2009/340 |
| ***A 23 K 1/175*** | (2006.01) | P-2009/434 |
| ***A 23 N 12/08*** | (2006.01) | P-2009/431 |
| ***A 24 F 13/00*** | (2006.01) | P-2009/480 |
| ***A 24 F 19/00*** | (2006.01) | P-2009/480 |
| ***A 24 F 47/00*** | (2006.01) | P-2009/480 |
| ***A 42 B 1/18*** | (2006.01) | P-2009/539 |
| ***A 42 B 1/18*** | (2006.01) | P-2009/540 |
| ***A 43 D 1/02*** | (2006.01) | P-2009/531 |
| ***A 45 B 11/04*** | (2006.01) | P-2009/539 |
| ***A 45 B 11/08*** | (2006.01) | P-2009/540 |
| ***A 47 C 4/02*** | (2006.01) | P-2009/507 |
| ***A 47 D 1/02*** | (2006.01) | P-2009/507 |
| ***A 47 D 11/00*** | (2006.01) | P-2009/507 |
| ***A 61 B 5/00*** | (2006.01) | P-2009/196 |
| ***A 61 B 5/0215*** | (2006.01) | P-2009/196 |
| ***A 61 B 5/0245*** | (2006.01) | P-2009/196 |
| ***A 61 B 5/107*** | (2006.01) | P-2009/531 |
| ***A 61 F 13/66*** | (2006.01) | P-2010/500 |
| ***A 61 K 9/08*** | (2006.01) | P-2009/393 |
| ***A 61 K 31/435*** | (2006.01) | P-2009/393 |
| ***A 61 K 31/445*** | (2006.01) | P-2009/393 |
| ***A 61 K 31/56*** | (2006.01) | P-2011/79 |

| (51) | | (21) |
|---|---|---|
| ***A 61 K 39/395*** | (2006.01) | P-2010/555 |
| ***A 61 K 39/395*** | (2006.01) | P-2011/24 |
| ***A 61 M 5/178*** | (2006.01) | P-2010/354 |
| ***A 61 M 5/34*** | (2006.01) | P-2010/354 |
| ***A 61 M 5/50*** | (2006.01) | P-2010/354 |
| ***A 61 P 25/00*** | (2006.01) | P-2010/555 |
| ***A 61 P 35/00*** | (2006.01) | P-2010/555 |
| ***A 62 C 27/00*** | (2006.01) | P-2009/416 |
| ***B 01 D 21/01*** | (2006.01) | P-2010/438 |
| ***B 01 D 47/02*** | (2006.01) | P-2009/72 |
| ***B 01 J 3/00*** | (2006.01) | P-2010/167 |
| ***B 01 J 3/03*** | (2006.01) | P-2010/167 |
| ***B 01 J 19/22*** | (2006.01) | P-2010/167 |
| ***B 21 B 15/00*** | (2006.01) | P-2010/242 |
| ***B 23 K 37/04*** | (2006.01) | P-2010/242 |
| ***B 42 D 15/10*** | (2006.01) | P-2009/464 |
| ***B 60 K 6/00*** | (2007.01) | P-2009/453 |
| ***B 60 L 9/02*** | (2006.01) | P-2009/560 |
| ***B 60 L 11/00*** | (2006.01) | P-2009/560 |
| ***B 60 L 11/18*** | (2006.01) | P-2009/473 |
| ***B 60 W 20/00*** | (2006.01) | P-2009/453 |
| ***B 65 F 1/06*** | (2006.01) | P-2010/174 |
| ***B 65 F 1/12*** | (2006.01) | P-2009/493 |
| ***C 04 B 7/02*** | (2006.01) | P-2009/386 |
| ***C 04 B 16/02*** | (2006.01) | P-2009/386 |
| ***C 05 F 11/08*** | (2006.01) | P-2010/244 |
| ***C 07 C 333/04*** | (2006.01) | P-2009/556 |
| ***C 07 C 333/16*** | (2006.01) | P-2009/555 |

| (51) | | (21) |
|---|---|---|
| ***C 07 F 3/06*** | (2006.01) | P-2009/555 |
| ***C 07 J 1/00*** | (2006.01) | P-2011/79 |
| ***C 07 J 3/00*** | (2006.01) | P-2011/79 |
| ***C 07 J 5/00*** | (2006.01) | P-2011/79 |
| ***C 07 J 7/00*** | (2006.01) | P-2011/79 |
| ***C 07 J 9/00*** | (2006.01) | P-2011/79 |
| ***C 07 J 11/00*** | (2006.01) | P-2011/79 |
| ***C 07 J 31/00*** | (2006.01) | P-2011/79 |
| ***C 07 J 41/00*** | (2006.01) | P-2011/79 |
| ***C 07 K 16/00*** | (2006.01) | P-2011/24 |
| ***C 07 K 16/18*** | (2006.01) | P-2011/24 |
| ***C 07 K 16/22*** | (2006.01) | P-2010/555 |
| ***C 07 K 16/30*** | (2006.01) | P-2011/24 |
| ***C 07 K 16/46*** | (2006.01) | P-2011/24 |
| ***C 12 C 3/12*** | (2006.01) | P-2010/192 |
| ***C 12 C 7/20*** | (2006.01) | P-2010/192 |
| ***C 12 C 7/24*** | (2006.01) | P-2010/192 |
| ***C 12 N 1/14*** | (2006.01) | P-2010/244 |
| ***C 12 N 1/20*** | (2006.01) | P-2010/244 |
| ***C 12 N 5/10*** | (2006.01) | P-2010/555 |
| ***C 12 N 15/68*** | (2006.01) | P-2010/555 |
| ***C 12 P 33/10*** | (2006.01) | P-2011/79 |
| ***C 12 P 33/16*** | (2006.01) | P-2011/79 |
| ***C 21 B 7/10*** | (2006.01) | P-2010/350 |
| ***C 22 B 5/14*** | (2006.01) | P-2010/350 |
| ***C 23 C 14/54*** | (2006.01) | P-2010/167 |
| ***C 23 C 14/56*** | (2006.01) | P-2010/167 |
| ***D 03 D 43/04*** | (2006.01) | P-2010/26 |
| ***D 03 D 49/34*** | (2006.01) | P-2010/26 |
| ***E 03 F 7/04*** | (2006.01) | P-2009/479 |
| ***E 03 F 7/06*** | (2006.01) | P-2009/479 |

| (51) | | (21) |
|---|---|---|
| ***E 05 B 29/00*** | (2006.01) | P-2009/418 |
| ***F 02 C 1/02*** | (2006.01) | P-2009/526 |
| ***F 02 K 3/00*** | (2006.01) | P-2009/526 |
| ***F 03 D 9/00*** | (2006.01) | P-2009/129 |
| ***F 03 D 9/02*** | (2006.01) | P-2009/129 |
| ***F 03 D 11/04*** | (2006.01) | P-2009/409 |
| ***F 03 G 3/00*** | (2006.01) | P-2009/561 |
| ***F 03 G 7/00*** | (2006.01) | P-2009/129 |
| ***F 03 G 7/08*** | (2006.01) | P-2009/129 |
| ***F 03 G 7/08*** | (2006.01) | P-2009/561 |
| ***F 03 G 7/10*** | (2006.01) | P-2009/561 |
| ***F 16 L 29/00*** | (2006.01) | P-2009/479 |
| ***F 22 B 3/02*** | (2006.01) | P-2009/398 |
| ***F 23 C 5/08*** | (2006.01) | P-2010/550 |
| ***F 23 C 7/00*** | (2006.01) | P-2010/550 |
| ***F 23 L 17/02*** | (2006.01) | P-2009/467 |
| ***F 23 L 17/08*** | (2006.01) | P-2009/467 |
| ***F 23 L 17/10*** | (2006.01) | P-2009/467 |
| ***F 24 H 7/00*** | (2006.01) | P-2009/398 |
| ***F 26 B 9/00*** | (2006.01) | P-2009/431 |
| ***F 27 D 9/00*** | (2006.01) | P-2010/350 |
| ***F 28 D 20/00*** | (2006.01) | P-2009/398 |
| ***F 28 F 27/02*** | (2006.01) | P-2010/350 |
| ***G 01 B 11/16*** | (2006.01) | P-2009/531 |
| ***G 01 D 5/14*** | (2006.01) | P-2009/542 |
| ***G 01 D 5/14*** | (2006.01) | P-2009/543 |
| ***G 01 F 1/00*** | (2006.01) | P-2010/350 |
| ***G 01 K 13/02*** | (2006.01) | P-2010/350 |
| ***G 01 K 17/08*** | (2006.01) | P-2010/350 |
| ***G 01 L 7/00*** | (2006.01) | P-2010/350 |
| ***G 01 L 9/00*** | (2006.01) | P-2010/350 |

| (51) | | (21) |
|---|---|---|
| ***G 01 N 33/53*** | (2006.01) | P-2010/555 |
| ***G 01 R 1/38*** | (2006.01) | P-2009/475 |
| ***G 01 R 3/00*** | (2006.01) | P-2009/475 |
| ***G 01 R 19/04*** | (2006.01) | P-2009/533 |
| ***G 01 R 33/032*** | (2006.01) | P-2009/475 |
| ***G 05 D 7/00*** | (2006.01) | P-2010/350 |
| ***G 08 B 21/18*** | (2006.01) | P-2010/350 |

| (51) | | (21) |
|---|---|---|
| ***H 01 F 27/28*** | (2006.01) | P-2009/488 |
| ***H 01 G 15/00*** | (2006.01) | P-2010/539 |
| ***H 01 G 17/00*** | (2006.01) | P-2010/539 |
| ***H 02 J 3/00*** | (2006.01) | P-2009/487 |
| ***H 02 K 37/00*** | (2006.01) | P-2009/544 |
| ***H 04 B 10/00*** | (2006.01) | P-2009/195 |

## РЕГИСТРОВАНИ ПАТЕНТИ

PATENTS GRANTED

**(51)** ***A 01 N 43/56*** (2006.01) **(11) 51634**
**(13) B**
(21) P-2011/0098 (22) 23.04.2008.
(30) EP 25.04.2007. 07008370
(86) WO 23.04.2008. PCT/EP2008/003279
(87) WO 06.11.2008. WO 2008/131901
(96) 23.04.2008. 08749078.5
(97) 08.12.2010. EP2150113B 2010/49 EN
**(54) FUNGICIDNE KOMPOZICIJE**
FUNGICIDAL COMPOSITIONS
(73) SYNGENTA PARTICIPATIONS AG, Schwarzwaldallee 215, 4058 Basel, CH
(72) TOBLER, Hans, Birsigstrasse 129, CH-4054 Basel, CH; WALTER, Harald, Syngenta Crop Protection Münchwilen AG Schwaffhauserstrasse, CH-4332 Stein, CH; HAAS, Ulrich, Johannes, Syngenta Crop Protection Münchwilen AG Schaffhauserstrasse, CH-4332 Stein, CH
(74) RISTIĆ, Dragoslav i ost., Cara Lazara 7, 11000 Beograd, RS
(57) Kompozicija prikladna za kontrolu bolesti koje su uzrokovane preko fitopatogena, **naznačena time**, da obuhvata (A) jedinjenje sa formulom I gde $R_1$ je difluorometil ili trifluorometil, a X je hloro, fluoro ili bromo; i (B) najmanje jedno jedinjenje koje je izabrano iz grupe koja obuhvata (B1) strobilurin fungicid.
Prijava sadrži još 12 zavisnih patentnih zahteva.

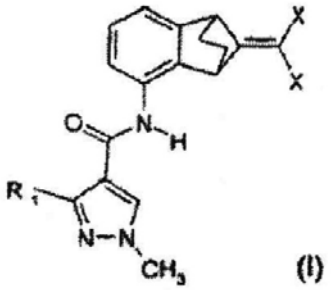

(I)

**(51)** ***A 01 N 57/20*** (2006.01) **(11) 51570**
***A 01 N 43/828*** (2006.01) **(13) B**
***A 01 N 37/22*** (2006.01)
***A 01 N 41/10*** (2006.01)
***A 01 N 43/78*** (2006.01)
(21) P-2005/0928 (22) 07.06.2004.
(43) 15.11.2007.
(30) GB 18.06.2003. 0314190.0
(86) WO 07.06.2004. PCT/GB2004/002409
(87) WO 29.12.2004. WO 2004/112481
**(54) POSTUPAK ZA KONTROLISANJE KOROVA**
METHOD OF CONTROLLING WEEDS
(73) SYNGENTA PARTICIPATIONS AG, Schwarzwaldallee 215, CH-4058 Basel, CH
(72) CORNES, Derek, Syngenta Crop Protection AG, Schwarzwaldallee 215, CH-4085 Basel, CH; JOHNSON, Michael Donald, Syngenta Crop Protection, Inc., 410 Swing Riad, Greensboro, NC 27409, US
(74) RISTIĆ, Dragoslav i ost., Cara Lazara 7, 11000 Beograd, RS
(57) Postupak za kontrolu neželjene vegetacije tokom cele sezone, **naznačen time** što pomenuti postupak sadrži jednu primenu, nakon pojavljivanja useva, herbicidne kombinacije koja sadrži 2-(supstituisani benzoil)-1,3-cikloheksandion ili njegov metalni helat, glifozat ili njegovu so i acetamid.
Prijava sadrži još 13 zavisnih i 1 nezavisni patentni zahtev.

**(51)** ***A 22 C 13/00*** (2006.01) **(11) 51633**
***A 22 C 17/14*** (2006.01) **(13) B**
(21) P-2011/0083 (22) 07.12.2007.
(30) DK 08.12.2006. 200601616
(86) WO 07.12.2007. PCT/DK2007/000535
(87) WO 12.06.2008. WO 2008/067820
(96) 07.12.2007. 07817929.8
(97) 24.11.2010. EP2101590B 2010/47 EN
**(54) PROCES SPAJANJA KOMADA PRIRODNOG OMOTAČA**
A PROCESS FOR JOINING OF PIECES OF NATURAL CASING
(73) DAT-SCHAUB A.M.B.A., Fläsketorvet 41, 1711 Copenhagen V, DK
(72) HANSEN, Erik, Torngaard, c/o DAT-Schaub Holding Fläsketorvet 41, 1711 Copenhagen V, DK; HANSEN, Kim, c/o Dat-Schaub Porto S.A. Rua do Eirado, 350, 4410-429 Arcozelo V.N., Gaia, PT; ANDERSEN, Knud, c/o DAT-Schaub a.m.b.a. Storegade 88, 6701 Esbjerg, DK
(74) RISTIĆ, Dragoslav i ost., Cara Lazara 7, 11000 Beograd, RS
(57) Proces čvrstog spajanja dva ili više komada prirodnog omotača sa ciljem dobijanja željenih dimenzija, to jest dužine, izgleda i kalibra **naznačen time** da se dva ili više komada omotača spajaju pomoću transglutaminaze, pri čemu se transglutaminaza nanosi najmanje na jedan od komada omotača koji se spajaju, a zatim pritiskom spaja sa drugim komadom omotača sa kojim treba da reaguje.
Prijava sadrži još 14 zavisnih patentnih zahteva.

**(51)** ***A 47 J 27/092*** (2006.01) **(11) 51604**
***A 47 J 27/08*** (2006.01) **(13) B**
(21) P-2010/0384 (22) 31.01.2008.
(30) DE 09.03.2007. 200720003676U
(96) 31.01.2008. 08001766.8
(97) 09.06.2010. EP2000061B 2010/23
**(54) EKSPRES LONAC ZA KUVANJE**
HIGH PRESSURE COOKING POT
(73) SILAG HANDEL AG, Liebigstrasse 3-9, 40764 Langenfeld, DE
(72) SCHULTZ, Horst, am Dornbsuch 23, 65239 Hochheim, DE
(74) RASULIĆ, Bojana, Svetogorska 4, 11000 Beograd, RS
(57) Ekspres-lonac obuhvata:
posudu (1) sa otvorom na posudi (10) i poklopac (2), koji obuhvata poklope posude (20) sa ispušnim otvorom i mehanizmom za zatvaranje, sa manuelnim pokretanjem (3), sa obrtnim, na ploči poklopca (20) pričvršćenim, elementom, pri čemu se okretanjem obrtnog elementa posuda (1) sa postavljenim poklopcem (2) može blokirati, **naznačen time**, što poklopac ima ispušni ventil (4), koji je pričvršćen za obrtni element tako, da se ispušni ventil (4) pri okretanju obrtnog elementa zajedno okreće sa njim, a pri čemu ispušni ventil ima mehanizam za aktiviranje, sa kojim se jedan deo ventila (4) može pokretati, radi otvaranja i zatva-ventila, i pri čemu se deo ventila (4), pomoću mehanizma za aktiviranje zatvaranja ventila, može zaptivno pritisnuti na ispušni otvor i tako istovremeno sprečiti ili barem otežati okretanje obrtnog elementa, a za otvaranje se može udaljavati od njega, take da para iz lonca može da izlazi i omogućava se okretanje obrtnog elementa za deblokiranje poklopca.
Prijava sadrži još 14 patentnih zahteva.

---

**(51)** ***A 61 B 5/01*** (2008.04) **(11) 51589**
***A 61 B 5/05*** (2008.04) **(13) B**
***A 61 B 5/0402*** (2008.04)
(21) P-2007/0308 (22) 17.07.2007.
(43) 25.03.2009.
**(54) UREĐAJ ZA ANALIZU RELAKSACIJE U KADAMA**
APPARATUS FOR ANALYSIS OF RELAXATION IN BATHTUBS
(73) RANĐELOVIĆ, Vladimir, Bledska 4/12, 18000 Niš, RS
(72) RANĐELOVIĆ, Vladimir, Bledska 4/12, 18000 Niš, RS
(57) Uređaj za analizu relaksacije u kadama koji se sastoji od kade za relaksaciju 34, **naznačen time**, što je emisiona elektroda (44) postavljena na dnu kade sa njene unutrašnje strane, povezana sa generatorom signala (8), dok su prijemne elektrode postavljene na rukohvatima (25, 46) i osloncima za ruke (23, 45) povezane sa kolom za obradu elektrodermalnog signala (14), koje je povezano sa analogno-digitalnim konvertorom (9), koji je dalje povezan sa ulaznim portovima procesorske jedinice (1).
Prijava sadrži još 2 zavisna patentna zahteva.

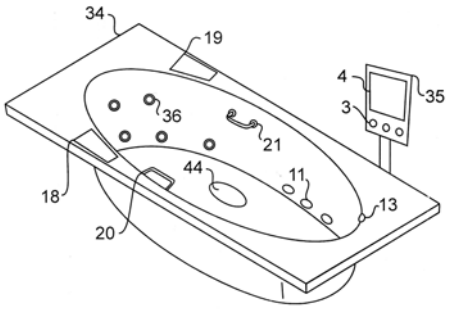


---

**(51)** ***A 61 F 6/14*** (2006.01) **(11) 51626**
**(13) B**
(21) P-2011/0104 (22) 20.09.2007.
(30) EP 20.09.2006. 20060019697
(86) WO 20.09.2007. PCT/EP2007/008202
(87) WO 27.03.2008. WO 2008/034619
(96) 20.09.2007. 07818292.0
(97) 01.12.2010. EP2079413B 2010/48 EN
**(54) INTRAUTERINO KONTRACEPTIVNO SREDSTVO**
INTRAUTERINE CONTRACEPTIVE DEVICE
(73) KARPATI, Melinda-Kinga, Industriestrasse 13B, 6300 Zug, CH
(72) KARPATI, Melinda-Kinga, Industriestrasse 13B, 6300 Zug, CH
(74) PETOŠEVIĆ DOO, Vele Nigrinove 16a, 11000 Beograd, RS
(57) Intrauterine kontraceptivno sredstva koje se sastoji od nosećeg tela (1) i aktivne metalne legure (4) **naznačeno time** što aktivna metalna legura ima formulu ZnxCuyMnzAuk ili ZnxCuyMnzAgk gde je x+y+z+k = 100% težine, x je u opsegu od oko 18 do 30 % težine, z je u opsegu od oko 0, 5 do 3 % težine, k je u opsegu od oko 3 do 12 % težine, i y predstavlja ostatak.
Prijava sadrži još 8 zavisnih patentnih zahteva.

---

**(51)** ***A 61 K 9/08*** (2006.01) **(11) 51615**
***A 61 K 31/7072*** (2006.01) **(13) B**
***A 61 K 47/32*** (2006.01)
***A 61 P 27/02*** (2006.01)
(21) P-2011/0016 (22) 27.09.2006.
(30) DE 29.09.2005. 102005046769
(86) WO 27.09.2006. PCT/EP2006/009383
(87) WO 12.04.2007. WO 2007/039201
(96) 27.09.2006. 06805904.7
(97) 24.11.2010. EP1940353B 2010/47 EN
**(54) FOTOSTABILNA FARMACEUTSKA KOMPOZICIJA KOJA SADRŽI BRIVUDIN ZA LEČENJE HERPETIČKOG KERATITISA**
PHOTOSTABLE PHARMACEUTICAL COMPOSITION CONTAINING BRIVUDINE FOR THE TREATMENT OF HERPETIC KERATITIS

(73) BERLIN-CHEMIE AG, Glienicker Weg 125-127, 12489 Berlin, DE
(72) WIHSMANN, Marc, Zum Mühlenschlag 55, 15732 Schulzendorf, DE; SCHMITZ, Reinhard, Flatowallee 21, 14055 Berlin, DE
(74) ĆOSOVIĆ, Dragoljub, Vojvode Dragomira 27, 11000 Beograd, RS
(57) Oftalmološka kompozicija koja sadrži od 0.05 do 0.3% w/w brivudina kao aktivni sastojak i agens za formiranje filma izabran iz grupe koju čine polivinil pirolidon (PVP), polivinil alkohol (PVA) i poliakrilat (PA).
Prijava sadrži još 13 zavisnih patentnih zahteva.

---

**(51)** ***A 61 K 9/20*** (2006.01) **(11) 51562**
***A 61 K 9/32*** (2006.01) **(13) B**
(21) P-2010/0458 (22) 14.04.2005.
(30) US 24.05.2004. 573881P
(86) WO 14.04.2005. PCT/US2005/012537
(87) WO 08.12.2005. WO 2005/115331
(96) 14.04.2005. 05735411.0
(97) 28.07.2010. EP1753395B 2010/30 EN
**(54) ENTERIČNI ČVRSTI ORALNI DOZNI OBLIK BISFOSFONATA KOJI SADRŽI HELAT**
ENTERIC SOLID ORAL DOSAGE FORM OF A BISPHOSPHONATE CONTAINING A CHELATING AGENT
(73) WARNER CHILCOTT COMPANY, LLC, P.O.BOX 1005, Union Street, Km 1.1, 00738-1005, Fajardo, PR
(72) DANSEREAU, Richard, John, 3580 Mooney Ave., Cincinnati, OH 45208, US; BURGIO, David, Ernest, Jr., 6411 Cedar Hill Dr., Liberty Township, OH 45011, US
(74) PETOŠEVIĆ, Dušan, Kozjačka 15, 11000 Beograd, RS
(57) Oralni dozni oblik farmaceutske kompozicije koji sadrži: (a) bisfosfonat izabran od risendronata, i njegovih soli, estara, hidrata, hemihidrata, polimorfa i solvata, kao i njihovih kombinacija; (b) od 75 mg do 250 mg dinatrijum-EDTA; i (c) enterični omotač koji omogućava oslobađanje bisfosfonata i EDTA u donjem delu gastrointestinalnog trakta sisara; i gde je molski odnos dinatrijum-EDTA i bisfosfonata najmanje 2:1.
Prijava sadrži još 8 zavisnih patentnih zahteva.

---

**(51)** ***A 61 K 9/20*** (2006.01) **(11) 51563**
***A 61 K 31/505*** (2006.01) **(13) B**
***A 61 K 47/12*** (2006.01)
***A 61 K 47/02*** (2006.01)
***A 61 K 31/22*** (2006.01)
(21) P-2010/0518 (22) 11.09.2007.
(30) HU 18.09.2006. 0600728
(86) WO 11.09.2007. PCT/HU2007/000082
(87) WO 27.03.2008. WO 2008/035128
(96) 11.09.2007. 07804524.2
(97) 24.11.2010. EP2063868B 2010/47 EN
**(54) FARMACEUTSKE KOMPOZICIJE KOJE SADRŽE ROZUVASTATIN KALCIJUM**
PHARMACEUTICAL COMPOSITIONS CONTAINING ROSUVASTATIN CALCIUM
(73) RICHTER GEDEON NYRT., Gyömröi út 19-21, 1103 Budapest, HU
(72) VIRÀGH, Mária, Práter u. 59, 1083 Budapest, HU; MONOSTORI, Iidikó, Erdökövesd u. 34, 1174 Budapest, HU
(74) PETOŠEVIĆ, Dušan, Kozjačka 15, 11000 Beograd, RS
(57) Nova farmaceutska kompozicija sadrži amorfni oblik rozuvastatin kalcijuma, **naznačena time**, što sadrži magnezijum hidroksid i/ili kalcijum acetat ili kalcijum glukonat ili kalcijum glicerofosfat ili aluminijum hidroksid kao stabilizator i jedan ili više farmaceutski prihvatljivih ekscipijenta.
Prijava sadrži još 8 zavisnih patentnih zahteva.

---

**(51)** ***A 61 K 9/20*** (2006.01) **(11) 51584**
**(13) B**
(21) P-2011/0032 (22) 13.03.2008.
(30) EP 14.03.2007. 07104157
(86) WO 13.03.2008. PCT/EP2008/053009
(87) WO 18.09.2008. WO 2008/110599
(96) 13.03.2008. 08717753.1
(97) 29.12.2010. EP2120884B 2010/52 EN
**(54) FARMACEUTSKA KOMPOZICIJA**
PHARMACEUTICAL COMPOSITION
(73) BOEHRINGER INGELHEIM INTERNATIONAL GMBH, Binger Strasse 173, 55216 Ingelheim am Rhein, DE
(72) THOMAS, Ruediger, Boehringer Ingelheim GmbH CD Patents Binger Str. 173, 55216 Ingelheim Am Rhein, DE; MAERZ, Frieder, Boehringer Ingelheim GmbH CD Patents Binger Str. 173, 55216 Ingelheim Am Rhein, DE
(74) PLAVŠA, Drago i ost., Strumička 51, 11050 Beograd, RS
(57) Farmaceutska tableta ili tabletni sloj koji sadrži angiotenzin II receptor antagonist telmisartana u amorfnom obliku, osnovni agens i sorbitol, **naznačen time,** što sorbitol ima specifičnu površinu između 0.75 - 3.5 $m^2/g$, prvenstveno 1.4 - 3.0 $m^2/g$, a naročito 2.0 - 2.5 $m^2/g$.
Prijava sadrži još 11 zavisnih patentnih zahteva.

---

**(51)** ***A 61 K 9/24*** (2006.01) **(11) 51592**
**(13) B**
(21) P-2011/0080 (22) 30.01.2008.
(30) JP 01.02.2007. 2007023594
(86) WO 30.01.2008. PCT/JP2008/051900
(87) WO 07.08.2008. WO 2008/093882
(96) 30.01.2008. 08704473.1
(97) 17.11.2010. EP2107905B 2010/46 EN
**(54) ČVRSTI PREPARAT KOJI SADRŽI ALOGLIPTIN I PIOGLITAZON**
SOLID PREPARATION COMPRISING ALOGLIPTIN AND PIOGLITAZONE
(73) TAKEDA PHARMACEUTICAL COMPANY LIMITED, 1-1, Doshomachi 4-chome, Chuo-ku, Osaka-shi, Osaka 541-0045, JP

(72) NAKAMURA, Kenji, c/o TAKEDA PHARMACEUTICAL COMPANY LIMITED 17-85, Jusohonmachi 2-chome Yodogawa-ku, Osaka-shi, Osaka 532-8686, JP; KIYOSHIMA, Kenichiro, c/o TAKEDA PHARMACEUTICAL COMPANY LIMITED 17-85, Jusohonmachi 2-chome Yodogawa-ku, Osaka-shi, Osaka 532-8686, JP; NOMURA, Junya, c/o TAKEDA PHARMACEUTICAL COMPANY LIMITED 17-85, Jusohonmachi 2-chome Yodogawa-ku, Osaka-shi, Osaka 532-8686, JP
(74) POPOVIĆ, Srđa i ost., Takovska 19,
11000 Beograd, RS
(57) Čvrsti preparat koji sadrži kao sledeće delove: prvi i drugi deo : (1) prvi deo sadrži 2-[[6-[(3R)-3-amino-1-piperidinil]-3, 4-dihidro-3-metil-2, 4-diokso-1(2H)-pirimidinil]metil]-benzonitril ili njegovu so i, kao prvi eksipijens, šećer ili šećerni alkohol; i
(2) drugi deo sadrži pioglitazon ili njegovu so i, kao drugi eksipijens, šećer ili šećerni alkohol.
Prijava sadrži još 6 zavisnih patentnih zahteva.

---

**(51)** ***A 61 K 31/352*** (2006.01) **(11) 51569**
***A 61 P 1/08*** (2006.01) **(13) B**
***A 61 P 29/02*** (2006.01)
(21) P-2011/0047 (22) 14.06.2006.
(30) US 16.06.2005. 691361P
US 12.10.2005. 726509P
(86) WO 14.06.2006. PCT/EP2006/005761
(87) WO 21.12.2006. WO 2006/133941
(96) 14.06.2006. 06754384.3
(97) 24.11.2010. EP1901734B 2010/47 EN
**(54) KOMPOZICIJE KOJE SADRŽE KRISTALNI TRANS-(+/-)-DELTA-9-TETRAHIDROKANABINOL**
COMPOSITIONS COMPRISING CRYSTALLINE TRANS-(+/-) -DELTA-9-TETRAHYDROCANNABINOL
(73) EURO-CELTIQUE S.A., 2, avenue Charles de Gaulle, 1653 Luxembourg, LU
(72) KUPPER, Robert, Joe, 755 Major Potter Road, East Greenwich, RI 02818, US
(74) JANKOVIĆ, Ivan i ost., Vlajkovićeva 28,
11000 Beograd, RS
(57) Farmaceutska kompozicija, koja sadrži trans-(±)-$\Delta^9$-tetrahidrokanabinol u kristalnom obliku i neki farmaceutski prihvatljiv nosač, za upotrebu kao medikament.
Prijava sadrži još 44 zavisna patentna zahteva.

---

**(51)** ***A 61 K 31/4035*** (2006.01) **(11) 51636**
***A 61 K 31/155*** (2006.01) **(13) B**
***C 07 D 209/46*** (2006.01)
***C 07 C 279/20*** (2006.01)
***C 07 C 277/08*** (2006.01)
(21) P-2004/1048 (22) 20.05.2003.
(43) 15.12.2006.
(30) FR 03.06.2002. 0206783
(86) WO 20.05.2003. PCT/EP03/05279
(87) WO 11.12.2003. WO 03/101450 A1

**(54) DERIVATI N-((3-OKSO- 2, 3-DIHIDRO-1H-IZOINDOL-1-IL) ACETIL) GVANIDINA KAO INHIBITORI NHE-1 ZA LEČENJE INFARKTA I ANGINE PEKTORIS**
N-((3-OXO 2, 3-DIHYDRO-1H-ISOINDOL-1YL) ACETYL)GUANIDINE DERIVATIVES AS NHE-1 INHIBITORS FOR THE TREATMENT OF INFARCTION AND ANGINA PECTORIS
(73) SANOFI-AVENTIS DEUTSCHLAND GmbH, Brüningstrasse 50, 65929 Frankfurt, DE
(72) KLEEMANN, Heinz-Werner, Mainstrasse 29, 65474 Bischofsheim, DE; HOFMEISTER, Armin, Pfaugasse 16, 55276 Oppenheim, DE; CARRY, Jean-Christophe, 41, rue du Dauphine, F-94100 Saint Maur des Fosses, FR; MIGNANI, Serge, 14, avenue de Robinson, F-92290 Chatenay Malabry, FR; BIGOT, Antony, Centre de recherche de Paris, Site de Vitry-Alfortville 13, quai Jules Guesde , F-94400 Vitry-sur-Seine, FR; RONAN, Baptiste, 15, allée des Noisetiers, F-92140 Clamart, FR
(74) POPOVIĆ, Srđa i ost., Takovska 19,
11000 Beograd, RS
(57) Jedinjenja formule I u kojoj R1 i R2 nezavisno jedan od drugog, predstavljaju vodonik, alkil koji ima 1, 2, 3 ili 4 ugljenikova atoma, alkenil koji ima 2, 3,4,5 ili 6 ugljenikovih atoma, alkinil koji ima 2, 3,4,5 ili 6 ugljenikovih atoma, aril, heteroaril, F, Cl, Br, J, $NO_2$, NH2, alkilamino koji ima 1, 2, 3 ili 4 ugljenikova atoma, NRaRb, alkilkarbonil amino koji ima 1, 2, 3 ili 4 ugljenikova atoma, OH, alkoksi koji ima 1, 2, 3 ili 4 ugljenikova atoma, $S(O)_nR7$, $CO_2H$, alkoksikarbonil koji ima 1, 2, 3 i.i 4 ugljenikova atoma, alkilkarbonil koji ima 1, 2, 3 ili 4 ugljenikova atoma, $CONH_2$, CONRaRb, CN, polifluoroalkil koji ima 1, 2, 3 ili 4 ugljenikova atoma, polifluoroalkoksi koji ima 1,2 ili 3 ugljenikova atoma ili $SO_3H$; pri čemu su sami R1 i R2 po izboru supstituisani sa linearnom ili razgranatom alkil grupom koja ima 1, 2, 3 ili 4 ugljenikova atoma;
n nula, 1 ili 2 R3 je vodonik, aril, heteroaril, grupa Alk-R8 tipa ili cikloalkil koji ima 3, 4, 5, 6, 7 ili 8 ugljenikovih atoma, u kojoj je cikloalkil po izboru supstituisan sa jednim ili više supstituenata izabranih iz grupe F, Cl, Br i J, Alk je alkil koji ima 1, 2, 3,4 ili 5 ugljenikovih atoma u linearnom ili razgranatom lancu, R8 je vodonik, cikloalkil koji ima 3, 4, 5, 6, 7 ili 8 ugljenikovih atoma, polifluoroalkil koji ima 1, 2, 3 ili 4 ugljenikova atoma, aril, heteroaril, OH, alkoksi koji ima 1, 2, 3 ili 4 ugljenikova atoma; $CO_2H$, $CONH_2$, CONRaRb, $NH_2$, alkilamino koji ima 1, 2, 3 ili 4 ugljenikova atoma ili NRaRb;
R4, R5 i R6 su, nezavisno jedan od drugog, vodonik ili linearni ili razgranati alkil koji ima 1, 2, 3 ili 4 ugljenikova atoma;
R7 je linearni ili razgranati alkil koji ima 1, 2, 3 ili 4 ugljenikova atoma;
Ra i Rb su, nezavisno jedan od drugog, definisani kao R7, ili alternativno Ra i Rb grade, zajedno sa atomom azota za koji su vezani, 5- ili 6-člani heterociklični prsten koji po izboru sadrži drugi hetero atom izabran od O, S

ili N, i njihove racemske smeše, njihovi enantiomeri i diastereoizomeri i njihove smeše, njihovi tautomeri i njihove farmaceutski prihvatljive soli.
Prijava sadrži još 21 patentni zahtev.

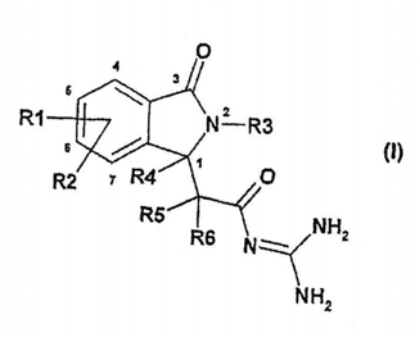

(I)

**(51)** ***A 61 K 31/403*** (2006.01) **(11) 51627**
***A 61 P 25/00*** (2006.01) **(13) B**
***C 07 D 209/88*** (2006.01)
(21) P-2011/0017 (22) 09.06.2006.
(30) IN 19.10.2005. CH15042005
(86) WO 09.06.2006. PCT/IN2006/000195
(87) WO 26.04.2007. WO 2007/046111
(96) 09.06.2006. 06766266.8
(97) 20.10.2010. EP1948166B 2010/42 EN
**(54) DERIVATI KARBAZOLA KAO FUNKCIONALNI 5-HT6 LIGANDI**
CARBAZOLE DERIVATIVES AS FUNCTIONAL 5-HT6 LIGANDS
(73) SUVEN LIFE SCIENCES LIMITED, Serene Chambers, Road No. 7, Banjara Hills, Hyderabad 500 034 (Andra Pradesh), IN
(72) RAMAKRISHNA, Venkata, Satya, Nirogi, Serene Chambers Road No. 7 Banjara Hills, Hyderabad 500 034, Andhra Pradesh , IN; KAMBHAMPATI, Rama, Sastri, Serene Chambers Road No. 7 Banjara Hills, Hyderabad 500 034, Andhra Pradesh , IN; SHIRSATH, Vikas, Shreekrishna, Serene Chambers Road No. 7 Banjara Hills, Hyderabad 500 034, Andhra Pradesh , IN; KONDA, Jagadish, Babu, Serene Chambers Road No. 7 Banjara Hills, Hyderabad 500 034, Andhra Pradesh , IN; VISHWAKARMA, Santosh, Serene Chambers Road No. 7 Banjara Hills, Hyderabad 500 034, Andhra Pradesh, IN; JASTI, Venkateswarlu, Serene Chambers Road No. 7 Banjara Hills, Hyderabad 500 034, Andhra Pradesh , IN
(74) VLAHOVIĆ, Slobodan, Radoja Dakića 35/32, 11070 Novi Beograd, RS
(57) Jedinjenje sa Formulom (I), ili takva farmaceutski prihvatljiva so, gde: '----' isprekidana linija predstavlja opciono dvostruku vezu; Ar predstavlja bilo koju grupu izabranu od fenila naftila, monocikličnog ili bicikličnog heteroarila, od kojih svaki može biti dalje supstituisan pomoću jednog ili više nezavisnih supstituenata definisanih kao $R_1$; Ar- na primer može biti, $R_1$ predstavlja jedan ili više supstitucija na benzenskom prstenu, i uključuje vodonik, halogen, cijano, ($C_1$-$C_3$) alkil, halo ($C_1$-$C_3$) alkiyl, ($C_1$-$C_3$)alkoksi, halo($C_1$-$C_3$)alkoksi, ciklo($C_3$-$C_6$)alkil ili cido($C_3$-$C_6$)alkoksi; R predstavlja bilo hidrogen ili ($C_1$-$C_3$)alkil; i "n" predstavlja spoj bilo 1 ili 2; i obuhvata njegove moguće stereoizomere.
Prijava sadrži još 13 zavisnih patentnih zahteva.

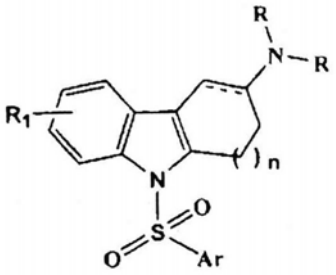

(I)

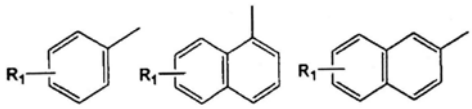


**(51)** ***A 61 K 31/454*** (2006.01) **(11) 51567**
***A 61 K 45/06*** (2006.01) **(13) B**
***A 61 K 39/395*** (2006.01)
***A 61 P 35/00*** (2006.01)
(21) P-2010/0541 (22) 02.08.2007.
(30) US 03.08.2006. P835752
(86) WO 02.08.2007. PCT/US2007/017343
(87) WO 14.02.2008. WO 2008/019065
(96) 02.08.2007. 07811048.3
(97) 03.11.2010. 2046331B 2010/44 EN
**(54) UPOTREBA 3-(4-AMINO-1-OKSO-1, 3-DIHIDRO-IZOINDOL-2-IL)-PIPERIDIN-2, 6-DIONA ZA LEČENJE LIMFOMA MANTLE ĆELIJA**
USE OF 3-(4-AMINO-1-OXO-1, 3-DIHYDRO-ISOINDOL-2-IL)-PIPERIDINE-2, 6-DIONE FOR THE TREATMENT OF MANTLE CELL LYMPHOMAS
(73) CELGENE CORPORATION, 86 Morris Avenue, Summit, NJ 07901, US
(72) ZELDIS, Jerome, B., 151 Library Place, Princeton, NJ 08540, US
(74) POPOVIĆ, Srđa i ost., Takovska 19, 11000 Beograd, RS
(57) 3-(4-amino-1 -okso-1,3-dihidro-izoindol -2-il)-piperidin-2,6-dion za upotrebu u lečenju limfoma mantle ćelija kod ljudi.
Prijava sadrži još 14 zavisnih patentnih zahteva.

**(51)** ***A 61 K 31/465*** (2006.01) **(11) 51629**
***C 07 C 67/02*** (2006.01) **(13) B**
***A 61 P 9/00*** (2006.01)
***A 61 K 31/232*** (2006.01)
***C 07 C 69/587*** (2006.01)
(21) P-2011/0091 (22) 22.06.2007.
(30) FR 23.06.2006. 0605649
(86) WO 22.06.2007. PCT/EP2007/056277
(87) WO 27.12.2007. WO 2007/147899
(96) 22.06.2007. 07765584.3
(97) 24.11.2010. EP2034999B 2010/47 EN
**(54) ESTRI DHK I NJIHOVA UPOTREBA U LEČENJU I SPREČAVANJU KARDIOVASKULARNIH OBOLJENJA**
DHA ESTERS AND USE THEREOF IN THE TREATMENT AND THE PREVENTION OF CARDIOVASCULAR DISEASES
(73) PIERRE FABRE MEDICAMENT, 45, Place Abel Gance, 92100 Boulogne-Billancourt, FR
(72) BRUNE, Frédérique, 30, allée des Longs Réages, 91190 Gyf Sur Yvette, FR; DELHON, André, 36, rue Hector Berlioz, 81100 Castres, FR; GARDETTE, Jean, 40 rue de Chézy, 92200 Neuilly Sur Seine, FR; PATOISEAU, Jean, François, 7 rue Jules Ferry, 81100 Castres, FR; MARTY, Alain, 30 rue des 36 ponts, 31400 Toulouse, FR; SEVERAC, Etienne, 59, Route de Leguevin Le Mas Soulanes n 3, 31820 Pibrac, FR
(74) PAVLOVIĆ, Gordana i ost., Majke Jevrosime 53, 11000 Beograd, RS
(57) Estar dokosaheksaenske kiseline sa alkoholom odabranim iz grupe koja sadrži: - pantenol sledeće formule : I - izosorbid sledeće formule : i izosorbid mononitrat sledeće formule:
Prijava sadrži još 13 zavisnih patentnih zahteva.

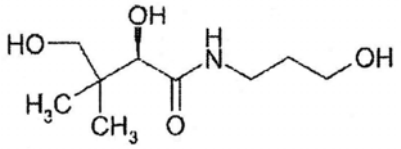


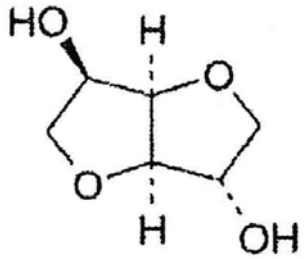


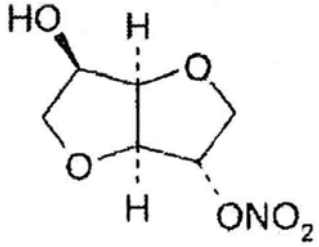


**(51)** ***A 61 K 31/46*** (2006.01) **(11) 51585**
***A 61 P 43/00*** (2006.01) **(13) B**
(21) P-2006/0208 (22) 21.09.2004.
(43) 05.06.2008.
(30) DE 26.09.2003. 10345065.3
(86) WO 21.09.2004. PCT/EP2004/010564
(87) WO 07.04.2005. WO 2005/030211 A1
**(54) AEROSOLNA FORMULACIJA ZA INHALIRANJE KOJA SADRŽI ANTIHOLINERGIK**
AEROSOL FORMULATION FOR INHALATION, CONTAINING AN ANTICHOLINERGIC AGENT
(73) BOEHRINGER INGELHEIM INTERNATIONAL GMBH, Binger Strasse 173, Ingelheim am Rhein, DE
(72) BOECK, Georg, Ahornweg 48, 88471 Laupheim, DE; SCHMIDT, Friedrich, Feierabendweg 2, 55218 Ingelheim, DE
(74) PLAVŠA, Drago i ost., Strumička 51, 11050 Beograd, RS
(57) Farmaceutski preparat za inhaliranje, koji kao jedinu delotvornu supstancu sadrži jedinjenje formule 1 u kojoj $X^-$ označava anjon odabran iz grupe koju čine, hlorid, bromid, jodid, sulfat, fosfat, metansulfonat, nitrat, maleat, acetat, citrat, fumarat, tartarat, oksalat, sukcinat, benzoat i p-toluolsulfonat, a kao rastvarač, etanol ili smešu etanola i vode, najmanje jednu farmakološki prihvatljivu kiselinu, i opciono druge farmakološki prihvatljive pomoćne supstance i/ili kompleksne agense.
Prijava sadrži još 9 patentnih zahteva.

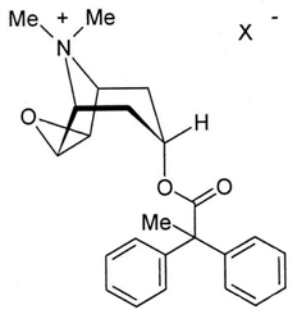


**(51)** ***A 61 K 31/485*** (2006.01) **(11) 51573**
***A 61 P 25/14*** (2006.01) **(13) B**
(21) P-2011/0030 (22) 01.06.2005.
(30) EP 08.06.2004. 04013469
(86) WO 01.06.2005. PCT/EP2005/005888
(87) WO 22.12.2005. WO 2005/120506
(96) 01.06.2005. 05754710.1
(97) 03.11.2010. EP1781291B 2010/44 EN
**(54) OPIOIDI ZA LEČENJE NEMIRNIH DONJIH UDOVA**
OPIOIDS FOR THE TREATMENT OF THE RESTLESSNESS OF THE LOWER LIMBS
(73) EURO-CELTIQUE S.A., 2, avenue Charles de Gaulle, 1653 Luxembourg, LU

(72) FLEISCHER, Wolfgang, Posener Strasse 6, 55218 Ingelheim, DE; REIMER, Karen, Im Rehwinkel 12, 65582 Hambach, DE; GAWORA, Karin, Ostendstrasse 2, 35080 Bad Endbach, DE
(74) JANKOVIĆ, Ivan i ost., Vlajkovićeva 28, 11000 Beograd, RS
(57) Upotreba opioidnog oralnog doznog oblika sa usporenim oslobađanjem koji sadrži smešu opioidnog agonista izabranog iz grupe koju čine oksikodon, hidrokodon, hidromorfon, morfin, metadon, oksimorfon, fentanil i sufentanil u obliku slobodne baze ili farmaceutski prihvatljive soli i opioidnog antagonista izabranog iz grupe koju čine naltrekson, nalmefen i nalokson u obliku slobodne baze ili farmaceutski prihvatljive soli, za proizvodnju leka za lečenje pacijenata sa sindromom nemirnig nogu (RLS).
Prijava sadrži još 10 zavisnih patentnih zahteva.

---

**(51)** ***A 61 K 31/485*** (2006.01) **(11) 51591**
***A 61 K 9/32*** (2006.01) **(13) B**
***A 61 K 9/22*** (2006.01)
(21) P-2011/0058 (22) 24.08.2007.
(30) US 25.08.2006. 840244P
(96) 24.08.2007. 09156843.6
(97) 01.12.2010. EP2082742B 2010/48 EN
**(54) FARMACEUTSKI DOZNI OBLICI REZISTENTNI NA ZLOUPOTREBU KOJI SADRŽE OPIOIDNI ANALGETIK**
TAMPER RESISTANT ORAL PHARMACEUTICAL DOSAGE FORMS COMPRISING AN OPIOID ANALGESIC
(73) PURDUE PHARMA LP, One Stamford Forum, 201 Tresser Boulevard, Stamford, CT 06901, US
(72) MCKENNA, William, Henry, 10 Longmeadow Road, Yonkers, NY 10704, US; MANNION, Richard, Owen, 3860 Green Ridge Road, Furlong, PA 18925, US; O'DONNELL, Edward, Patrick, 38 Chestnut Court, Basking Ridge, NJ 07920, US; HUANG, Haiyong, Hugh, 33 Ketley Place, Princeton, NJ 08540, US
(74) JANKOVIĆ, Ivan i ost., Vlajkovićeva 28, 11000 Beograd, RS
(57) Čvrst oralni farmaceutski dozni oblik sa produženim oslobađanjem, koji sadrži formulaciju matrice sa produženim oslobađanjem, a formulcija matrice sa produženim oslobađanjem sadrži kompoziciju koja sadrži (1) bar jedan polietilen oksid koji na osnovu reoloških merenja ima približnu molekulsku težinu od najmanje 1, 000, 000; i
(2) bar jedan aktivan agens; I gde je formulacija matrice sa produženim oslobađanjem očvršćavana na temperaturi od oko 60°C u toku vremenskog perioda od oko 1 minut i ima silu stvaranja naprsline od bar 110N kada se podvrgne testu utiskivanja.
Prijava sadrži još 29 zavisnih patentnih zahteva.

**(51)** ***A 61 K 31/52*** (2006.01) **(11) 51561**
***A 61 K 9/14*** (2006.01) **(13) B**
***A 61 P 31/12*** (2006.01)
(21) P-2002/0630 (22) 26.01.2001.
(43) 15.03.2005.
(30) US 28.02.2000. 60/185, 672
US 28.07.2000. 60/221, 313
(86) WO 26.01.2001. PCT/US01/02630
(87) WO 07.09.2001. WO 01/64221
**(54) FORMULACIJA MALE DOZE ENTEKAVIRA I UPOTREBA**
LOW DOSE ENTECAVIR FORMULATION AND USE
(73) BRISTOL-MYERS SQUIBB CO., P.O.Box 4000, Lawrenceville-Princeton Rd., Princeton, NJ 08543, US
(72) COLONNO, Richard J., 18 Salisbury Way, Farmington, CT 06032, US; SPROCKEL, Omar L., 1250 Dogwood Drive, Bridgewater, NJ 08807, US; HARIANAWALA, Abizer, 6103 Lexington Drive, Lexington, MA 02421, US; DESAI, Divyakant, 19 Greenfield Drive North, West Windsor, NJ 08550, US; FAKES, Michael G., 15 Derby Chase Court, Belle Mead, NJ 08502, US
(74) RISTIĆ, Dragoslav i ost., Cara Lazara 7, 11000 Beograd, RS
(57) Upotreba male doze entekavira za pripremu farmaceutskog preparata u obliku tablete ili kapsule za primenu jednom dnevno, u lečenju infekcije hepatitisom B kod odraslog pacijenta - čoveka, **naznačena time** što navedeni preparat sadrži od 0,001 do 10 mg entekavira vezanog za farmaceutski prihvatljiv nosilac - supstrat pomoću povidona kao vezivne supstance, te što navedeni farmaceutski preparat može da se dobije u procesu koji podrazumeva korake: (a) rastvaranja entekavira i supstance povidona u rastvaraču, kako bi se dobio rastvor koji sadrži entekavir i povidon na temperaturi u opsegu od oko 25°C do oko 80°C, gde je navedeni rastvarač voda ili voda sa podešenom pH vrednošću, (b) prskanja navedenog rastvora iz koraka (a) na supstrat - nosilac, dok se dati supstrat -nosilac kreće, pod uslovima koji se kontrolišu tako da se aglomeracija čestica smanji na najmanju moguću meru, (c) sušenja navedenog nosioca obloženog entekavirom iz koraka (b) kako bi se uklonio navedeni rastvarač, I (d) spajanja navedenog osušenog supstrata obloženog entekavirom iz koraka (c) sa drugim poželjnim sastojcima kako bi se dobio navedeni farmaceutski preparat.
Prijava sadrži još 8 patentnih zahteva.

---

**(51)** ***A 61 K 31/538*** (2006.01) **(11) 51607**
***A 61 K 31/535*** (2006.01) **(13) B**
***A 61 P 11/00*** (2006.01)
(21) P-2005/0361 (22) 11.11.2003.
(43) 10.04.2007.
(30) DE 15.11.2002. 102 53 282.6
(86) WO 11.11.2003. PCT/EP2003/012565
(87) WO 03.06.2004. WO 2004/045618 A2
**(54) NOVI LEKOVI ZA TRETIRANJE HRONIČNOG OPSTRUKTIVNOG OBOLJENJA PLUĆA**
NOVEL MEDICAMENT FOR THE TREATMENT OF CHRONIC OBSTRUCTIVE PULMONARY DISEASES

(73) BOEHRINGER INGELHEIM PHARMA GMBH & CO.KG, Binger Strasse 173, 55216 Ingelheim, DE
(72) BOUYSSOU, Thierry, Urlich-Schmid-Strasse 7, 88487 Mietingen, DE; BUETTNER, Frank, Friedhofstrasse 16, 88448 Attenweiler, DE; KONETZKI, Ingo, Müllerweg 9, 88447 Warthausen, DE; PESTEL, Sabine, Friedhofstrasse 16, 88448 Attenweiler, DE; SCHNAPP, Andreas, Esterbuch 5, 88400 Biberach, DE; SCHOLLENBERGER, Hermann, Hauff-Strasse 4, 55218 Ingelheim, DE; SCHROMM, Kurt, In der Doerrwiese 35, 55218 Ingelheim, DE; HEINE, Claudia, Georg-Schinbain-Strasse 66, 88400 Biberach, DE; RUDOLF, Klaus, Oeschweg 11, 88447 Warthausen, DE; LUSTENBERGER, Philipp, Mälzerstrasse 8, 88447 Warthausen, DE; HOENKE, Christoph, Turnierstrasse 43, 55218 Ingelheim, DE
(74) PLAVŠA, Drago i ost., Strumička 51, 11050 Beograd, RS
(57) Jedinjenja opšte formule 1, u kojoj n označava 1, $R^1$ označava vodonik, halogen, $C_1$-$C_4$-alkil ili -O-$C_1$-$C_4$-alkil grupu; $R^2$ označava vodonik, halogen, $C_1$-$C_4$-alkil ili -O-$C_1$-$C_4$-alkil grupu; $R^3$ označava $C_1$-$C_4$-alkil, OH, halogen, -O-$C_1$-$C_4$-alkil, -O-$C_1$-$C_4$-alkilen-COOH ili -O-$C_1$-$C_4$-alkilen-CO-O-$C_1$.$C_4$-alkil grupu, uz uslov da ako $R^1$ i $R^2$ pojedinačno označavaju orto-metil, $R^3$ ne može istovremeno biti OH.
Prijava sadrži još 24 patentna zahteva.

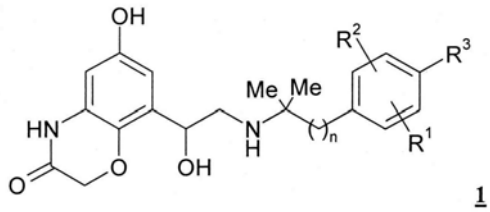

1

---

**(51)** ***A 61 K 31/70*** (2006.01) **(11) 51606**
***A 61 K 31/455*** (2006.01) **(13) B**
***A 61 K 31/198*** (2006.01)
***A 61 K 31/355*** (2006.01)
***A 61 K 31/385*** (2006.01)
***A 61 P 39/06*** (2006.01)
(21) P-2005/0376 (22) 19.11.2003.
(43) 31.12.2007.
(30) AT 19.11.2002. A 1734/2002
(86) WO 19.11.2003. PCT/AT2003/000346
(87) WO 03.06.2004. WO 2004/045626
**(54) PREPARAT KOJI SADRŽI NADH/NADPH**
NADH/NADPH CONTAINING COMPOUND
(73) NUTROPIA ERNÄHRUNGSMEDIZINISCHE FORSCHUNGS GmbH, Moosham 29, A-5580 Unternberg, AT
(72) SADEGHI, Behzad, Kerschbaumgasse 4/31, A-1010 Wien, AT; KÖSSLER, Peter, Bruckdorf 135, A-5571 Mariapfarr, AT; FUCHS, Norbert, Bruckdorf 135, A-5571 Mariapfarr, AT
(74) PLAVŠA, Drago i ost., Strumička 51, 11050 Beograd, RS
(57) Preparat, **naznačen time,** što sadrži najmanje jedan izolovan antioksidans A, koji potpomaže zdravlje, sa redoks-potencijalom ispod -180 mV, odabran iz grupe koju čine, NADH, NADPH, $FADH_2$, $FMNH_2$, FADH i FMNH, i najmanje jedan izolovan antioksidan B, koji stabilizuje antioksidans A, sa standardnim redoks-potencijalom koji je ispod standarnog redoks-potencijala antioksidansa A, pri čemu antioksidans B jeste hlorofil i/ili redukovani ferredoksin.
Prijava sadrži još 15 zavisnih patentnih zahteva.

---

**(51)** ***A 61 K 38/13*** (2006.01) **(11) 51614**
***A 61 P 31/14*** (2006.01) **(13) B**
(21) P-2011/0108 (22) 03.10.2005.
(30) IB 01.10.2004. PCT/2004/03205
(86) WO 03.10.2005. PCT/IB2005/002940
(87) WO 13.04.2006. WO 2006/038088
(96) 03.10.2005. 05791430.1
(97) 08.12.2010. EP1793844B 2010/49 EN
**(54) UPOTREBA [D-MEALA]3-[ETVAL]4-CIKLOSPORINA ZA LEČENJE INFEKCIJA HEPATITISOM C**
USE OF [D-MEALA]3-[ETVAL]4-CYCLOSPORIN FOR THE TREATMENT OF HEPATITIS C INFECTION
(73) DEBIOPHARM S.A., Forum "après-demain", Ch. Messidor 5-7, 1002 Lausanne, CH
(72) SCALFARO, Pietro, 24, Avenue Montagibert, CH-1005 Lausanne, CH; DUMONT, Jean-Maurice, Ch. de Pierra-Portay 20, CH-1009 Pully, CH; VUAGNIAUX, Grégoire, Rue Orient-Ville 8, CH-1005 Lausanne, CH; MAUVERNAY, Rolland-Yves, Champ du Moulin, CH-1677 Prez-vers-Siviriez, CH
(74) ŽIVKO MIJATOVIĆ AND PARTNERS, Takovska 58, 11000 Beograd, RS
(57) Upotreba [D-MeAla]$^3$-[EtVal]$^4$-CsA, **naznačena time**, što se koristi za proizvodnju leka za lečenje HCV infekcije ili prevenciju rekurencije HCV.
Prijava sadrži još 5 zavisnih patentnih zahteva.

---

**(51)** ***A 61 K 38/17*** (2006.01) **(11) 51602**
**(13) B**
(21) P-2002/0253 (22) 05.10.2000.
(43) 10.06.2005.
(30) US 06.10.1999. 60/157, 933
US 11.02.2000. 60/181,807
US 30.06.2000. 60/215,688
(86) WO 05.10.2000. PCT/US00/27579
(87) WO 12.04.2001. WO 01/24811
**(54) APRIL RECEPTOR (BCMA) I NJEGOVA UPOTREBA**
APRIL RECEPTOR (BCMA) AND USES THEREOF
(73) APOTECH R & D, S.A., 84, rue du Rhone, CH-1204 Geneva, CH; BIOGEN IDEC MA, INC., 14 Cambridge Center, Cambridge, MA02142, US
(72) SCHNEIDER, Pascal, Tuileries 7, CH-1066 Epalinges, CH; THOMPSON, Jeffrey, 60 Newcomb Road, Stoneham, MA 02180, US; CACHERO, Teresa, 105 Longwood Avenue, Brookline, MA 02446, US; AMBROSE, Christine, 197 Wakefield Street, Reading, MA 01867, US; RENNERT, Paul, 278 Ridge Street, Millis, MA 02054, US

(74) RISTIĆ, Dragoslav i ost., Cara Lazara 7, 11000 Beograd, RS
(57) Upotreba: a) polipeptida koji sadrži aminokiselinsku sekvencu koja je predstavljena od aminokiseline 8 do aminokiseline 41 u sekvenci čiji je ID broj: 8; ili
b) antitela usmerenog protiv aminokiselinske sekvence koja je predstavljena od aminokiseline 8 do aminokiseline 41 u sekvenci čiji je ID broj: 8 za pripremu farmaceutskog preparata za tretman tumorske ćelije koja eksprimira ligand koji indukuje proliferaciju (APRIL, eng. A Proliferation Inducing Ligand, prim. prev.).
Prijava sadrži još 9 patentnih zahteva.

---

**(51)** ***A 61 K 38/28*** (2006.01) **(11) 51579**
***A 61 K 47/00*** (2006.01) **(13) B**
(21) P-2003/0735 (22) 09.03.2002.
(43) 25.05.2006.
(30) DE 23.03.2001. 10114178.5
(86) WO 09.03.2002. PCT/EP02/02625
(87) WO 03.10.2002. WO 02/076495 A1
**(54) PREPARATI INSULINA KOJI NE SADRŽE CINK ILI SADRŽE MALE KOLIČINE CINKA I KOJI IMAJU POBOLJŠANU STABILNOST**
INSULIN PREPARATIONS, WHICH DO NOT CONTAIN ANY ZINC OR ONLY A SMALL QUANTITY OF ZINC AND WHICH HAVE AN IMPROVED STABILITY
(73) SANOFI-AVENTIS DEUTSCHLAND GmbH, Brüningstrasse 50, D-65929 Frankfurt, DE
(72) BODERKE, Peter, Johannesallee 16, D-65929 Frankfurt, DE
(74) POPOVIĆ, Srđa i ost., Takovska 19, 11000 Beograd, RS
(57) Farmaceutska formulacija u vodi koja sadrži Lys(B3), Glu(B29)-humani insulin; tenzid ili kombinaciju više tenzida, pri čemu tenzid predstavlja parcijalne i estre masnih kiselina i etre viševalentnih alkohola, glicerola i sorbitola, pri čemu farmaceutska formulacija sadrži manje od 0,2 mas.% cinka u odnosu na sadržaj insulina u formulaciji.
Prijava sadrži još 14 patentnih zahteva.

---

**(51)** ***A 61 K 39/395*** (2006.01) **(11) 51635**
***C 07 K 16/00*** (2006.01) **(13) B**
***C 07 K 16/18*** (2006.01)
***C 07 K 16/30*** (2006.01)
***C 07 K 16/46*** (2006.01)
(21) P-2003/0849 (22) 17.04.2002.
(43) 25.05.2006.
(30) US 26.04.2001. 60/286, 782
US 17.05.2001. 60/293, 020
US 26.06.2001. 60/301, 091
US 22.03.2002. 60/367, 002
(86) WO 17.04.2002. PCT/US02/11950
(87) WO 07.11.2002. WO 02/088170
**(54) ANTITELA KOJA BLOKIRAJU CRIPTO I NJIHOVA UPOTREBA**
CRIPTO BLOCKING ANTIBODIES AND USES THEREOF
(73) BIOGEN IDEC MA INC., 14 Cambridge Center, Cambridge, MA 02142, US
(72) SANICOLA-NADEL, Michele, 4 Maple Road, Winchester, MA 02142, US; WILLIAMS, Kevin, 7 Malden Street, Natick, MA 01760, US; SCHIFFER, Susan, 6 Moreland Avenue, Lexington, MA 02421, US; RAYHORN, Paul, 48 Mirimichi Road, Foxborough, MA 02035, US
(74) RISTIĆ, Dragoslav i ost., Cara Lazara 7, 11000 Beograd, RS
(57) Antitelo, **naznačeno time** što se specifično vezuje za epitop Cripto koji je sadržan u domenu koji obuhvata amino kiselinske ostatke od 46 do 62 amino kiseline u SEQ ID BR: 1 ili 2.
Prijava sadrži još 4 nezavisna i 15 zavisnih patentnih zahteva.

---

**(51)** ***A 61 L 2/14*** (2006.01) **(11) 51624**
***A 61 L 2/24*** (2006.01) **(13) B**
***A 61 L 2/20*** (2006.01)
***A 61 L 2/26*** (2006.01)
(21) P-2010/0511 (22) 14.01.2005.
(30) BR 16.01.2004. 0400237
(86) WO 14.01.2005. PCT/EP2005/000357
(87) WO 28.07.2005. WO 2005/067984
(96) 14.01.2005. 05700947.4
(97) 25.08.2010. EP1735014B 2010/34 EN
**(54) POSTUPAK I UREĐAJ ZA VAKUUMSKU STERILIZACIJU**
VACUUM STERILIZATION PROCESS AND DEVICE
(73) CISA S.p.A., Via Pontina Km. 28, 00040 Pomezia, IT
(72) SHIOSAWA, Tadashi c/o Sterlily Plasma Industriae, Comercio Ltda. Rua Lauro Vannucci, 1020, Campinas/Sao Paulo, CEP 13087-548, BR
(74) PETOŠEVIĆ D.O.O., Vele Nigrinove 16a, 11000 Beograd, RS
(57) Vakuumski postupak sterilizacije za sterilizaciju predmeta (M) tako da se na početku postupka predmeti (M) koji treba da se sterilišu slažu i podvrgavaju vakuumu u komori od nerđajućeg čelika (1) koja može da ima jedna ili dvoja vrata (2) i (3), u kome se koristi vakuumski sistem priključen na komoru (1) koji se sastoji najmanje od jedne mehaničke vakuum pumpe (4), koji predviđa uređaj (8) sa sistemom za ubrizgavanje sterilizacionog gasa i sistem za uvođenje atmosferskog vazduha koji ima filter i gde je rečeni postupak automatski pošto njime upravlja programabilni logički kontroler (14) **naznačen time**
a) što se primenjuje para rastvora vodonik peroksida i plazma zaostalog gasa iz atmosferskog vazguha pobuđena impulsnim električnim pražnjenjem,
b) što se vakuumski sistem dalje sastoji od najmanje jedne pumpe sa vodenim prstenom (5) paralelno vezane i spojene sa rečenom komorom (1) putem ventila (6) i (7),
c) što se isparavanje i izdvajanje vode iz vodonik peroksida odvija u uređaju (8),
d) što se sistem za uvođenje atmosferskog vazduha dalje sastoji od uređaja za otklanjanje vlage (11) i spojen je sa komorom (1) ventilima (9) i (10) i sa uređajem za odstranjivanje vlage (11) ventilom (11a),

e) što se u unutrašnjosti komore (1) nalazi postolje (12) koje se sastoji od etažnih ravnih površina koji osim što služi da drži predmete (M) koji treba da se sterilišu takođe ima i elektrode (E) kod kojih se stvara plazma za postupak sterilizacije,
f) stoje programabilni logički kontroler (14) odgovoran za: - smanjenje pritiska na predmete koji treba da se sterilišu pomoću pumpe sa vodenim prstenom (5) posle koje je mehanička vakuum pumpa (4) da bi se održao potreban pritisak plazme, - eliminisanje zaostale pare iz rastvora (ML) vodonik peroksida razblaživanjem filtriranim atmosferskim vazduhom pomoću pumpe sa vodenim prstenom (5), - primenu pare iz rastvora (ML) vodonik peroksida koji je ispario u vakuumu uz dejstvo toplote i za izdvajanje vode iz tog rastvora, - razblaživanje pare od vodonik peroksida ubrizgavanjem filtriranog vazduha (11) u komoru (1), - postolja (12) koja služe kao izvor signala (13) elektrode (E) za generisanje impulsnog DC pražnjenja i pražnjenje plazme blizu predmeta (M) raspoređenih na postoljima (12), - generisanje plazme iz zaostalog atmosferskog vazduha pobuđivanjem pomoću impulsne jednosmerne struje da bi se dobila odgovarajuća temperatura za sterilizaciju, - generisanje plazme impulsnog DC pražnjenja iz atmosferskog vazduha da bi se završila sterilizacija i uklonili ostatci, - primena vakuuma odvija se u rasponu pritiska koji se kreće od $5x10^{-2}$ mbara do $5x10^{2}$ mbara.
Prijava sadrži još 12 zavisnih patentnih zahteva.

---

**(51)** ***A 61 P 31/04*** (2006.01) **(11) 51578**
***A 61 K 9/20*** (2006.01) **(13) B**
***A 61 K 31/704*** (2006.01)
(21) P-2011/0038 (22) 23.02.2006.
(30) FR 25.02.2005. 0501936
(86) WO 23.02.2006. PCT/FR2006/000411
(87) WO 31.08.2006. WO 2006/090067
(96) 23.02.2006. 06725981.2
(97) 03.11.2010. EP1855695B 2010/44 FR
**(54) ČVRSTA FARMACEUTSKA KOMPOZICIJA KOJA SADRŽI TELITROMICIN**
SOLID PHARMACEUTICAL COMPOSITION COMPRISING TELITHROMYCIN
(73) AVENTIS PHARMA S.A., 20, avenue Raymond Aron, 92160 Antony, FR
(72) DESESQUELLE, Christian, 16, rue d`Eaubonne, F-95230 Soisy sous Montmorency, FR
(74) POPOVIĆ, Srđa i ost., Takovska 19, 11000 Beograd, RS
(57) Tableta koja sadrži telitromicin ili neku njegovu adicionu so sa farmaceutski prihvatljivom kiselinom, ukoliko aktivan princip, **naznačena time**, što sadrži, u odnosu na ukupnu težinu sastava:
- telitromicin ili neku njegovu adicionu so farmaceutski prihvatljive kiseline u takvom odnosu da telitromicin iznosi između 0,1 i 80 % (w/w) i najmanje jedan razblaživač plastičnih osobina, od mikrokristalne celuloze, u težinskim odnosima od 10 do 50 % (w/w).
Prijava sadrži još 10 patentnih zahteva.

**(51)** ***B 02 C 19/18*** (2006.01) **(11) 51608**
***B 29 B 17/02*** (2006.01) **(13) B**
***B 29 B 17/04*** (2006.01)
(21) P-2005/0385 (22) 24.11.2003.
(43) 03.08.2007.
(30) EP 26.11.2002. 02292926.9
(86) WO 24.11.2003. PCT/EP03/050888
(87) WO 10.06.2004. WO 2004/048059
**(54) POSTUPAK ZA RECIKLIRANJE KOMPOZITNIH MATERIJALA**
METHOD OF UPGRADING COMPOSITE MATERIALS
(73) TARKETT SAS, 2, rue de l'Egalité, 92748 Nanterre Cedex, FR
(72) BASTIN, Pierre, 49, rue de la Roche, B-6600 Bastogne, FR; SIMON, Jean-Yves, 1, rue de la Fontenelle, B-6810 Chiny, FR
(74) PETOŠEVIĆ, Dušan, Kozjačka 15, 11000 Beograd, RS
(57) Postupak za recikliranje kompozitnog materijala koja se sastoji od vlaknastih materijala i ne-vlaknastih plastičnih materijala, koji sadrže faze - hlađenja kompozitnog materijala na temperaturi između -40°C i +10°C; i - usitnjavanja ohlađenog kompozitnog materijala kako bi se odvojili vlaknasti materijali od ne-vlaknastih plastičnih materijala i - razdvajanja vlaknastih materijala od ne-vlaknasttih plastičnih materijala.
Prijava sadrži još 8 patentnih zahteva.

---

**(51)** ***B 25 C 1/00*** (2006.01) **(11) 51612**
***G 09 F 3/00*** (2006.01) **(13) B**
***A 01 G 23/099*** (2006.01)
***B 25 C 5/16*** (2006.01)
(21) P-2011/0095 (22) 30.05.2008.
(96) 30.05.2008. 08009870.0
(97) 15.12.2010. EP2127813B 2010/50 DE
**(54) MAGACIN ZA PLOČICE ZA OBELEŽAVANJE DRVETA**
MAGAZINE FOR WOOD MARKING PLATES
(73) LATSCHBACHER GMBH, Hauptstrasse 8/10, 4484 Kronstorf, AT
(72) LATSCHBACHER, Klaus, Wacholderstrasse 19, 4484 Kronstorf, AT
(74) PLAVŠA, Drago i ost., Strumička 51, 11050 Beograd, RS
(57) Magacin za pločice za obeležavanje drveta sa telom (10) magacina za prihvat mnoštva pločica (11) za obeležavanje drveta naslaganih jedna na drugu, sa kompresionom oprugom (15) za oslanjanje pločica (11) za obeležavanje drveta pod dejstvom opružne sile u telu (10) magacina na blokatoru (18) na izlazu (19) magacina i sa najmanje jednim pokretačkim elementom (24, 25) koji se ručno deblokira radi odbravljivanja blokatora (18) koji se pruža bočno sa magacina, **naznačen time**, što se na magacinu nalazi sigurnosni sklop (32, 33) namenjen za blokiranje odbravljivanja najmanje jednog pokretačkog elementa (24, 25) koji u blokiranom položaju drži opružni sklop (34, 35) i koji se može pomerati iz blokiranog položaja nasuprot dejstvu opružne sile.
Prijava sadrži još 8 zavisnih patentnih zahteva.

**(51)** ***B 26 F 1/44*** (2006.01) **(11) 51583**
**(13) B**
(21) P-2011/0082 (22) 18.11.2009.
(30) DE 19.12.2008. 202008016884U
(96) 18.11.2009. 09176274.0
(97) 19.01.2011. EP2202038B 2011/3 DE
**(54) NOSEĆA PLOČA ZA ALAT ZA ŠTANCOVANJE**
CARRIER PLATE FOR A STAMPING TOOL
(73) KARL MARBACH GMBH & CO. KG, August-Häusser-Strasse 5+6, 74080 Heilbronn, DE
(72) MARBACH, Peter, Hermann-Hesse-Strasse 25, 74074 Heilbronn, DE
(74) JANKOVIĆ, Ivan i ost., Vlajkovićeva 28, 11000 Beograd, RS
(57) Noseća ploča za alat za štancovanje koja se satoji od dva spoljnja sloja (3, 4), izmedju kojih se nalazi srednji sloj 2, **naznačen time**, što se srednji sloj (2) sastoji od jezgra od stišnjenih vlakana, a spoljnji slojevi (3, 4) od drvenog furnira.
Prijava sadrži još 13 zavisnih patentnih zahteva.

---

**(51)** ***B 29 C 49/32*** (2006.01) **(11) 51620**
***B 29 C 49/08*** (2006.01) **(13) B**
***B 29 C 49/48*** (2006.01)
***B 29 C 49/56*** (2006.01)
***B 29 C 49/70*** (2006.01)
(21) P-2004/0095 (22) 30.01.2004.
(43) 04.06.2007.
**(54) AUTOMATSKA MAŠINA ZA IZRADU PET AMBALAŽE SA ČETIRI GNEZDA NAIZMENIČNIM DUVANJEM DVA PO DVA**
FULL-AUTOMATIC PET BLOW MOULDING MACHINE WITH FOUR NESTS FOR PRODUCING PET PACKAGING BY ALTERNATE BLOWING TWO BY TWO
(73) ŠTULIĆ, Miroslav, Jabučki put bb, 26000 Pančevo, RS
(72) ŠTULIĆ, Miroslav, Jabučki put bb, 26000 Pančevo, RS
(74) ŽIVKOVIĆ, Zoran, Alekse Nenadovića 16, 11000 Beograd, RS
(57) Automatska mašina za izradu PET ambalaže sa četiri gnezda naizmeničnim duvanjem dva po dva/ie~sastoji od kabine 1, sprovodnika 4 predformi 8, selektora 5, beskonačne transportne trake 6, sklopa 15 za napajanje, prihvatanje, unošenje i duvanje predformi 8 i sklopa 31 od četiri dvodelna alata 32, stoje na prednjoj strani postavljena kabina 1 za prihvatanje predformi 8 u rinfuzu sa elevatorom 2, što je izmedju levka 3 i selektora 5, ukoso iznad transportne trake 6 postavljen jednokanalni sprovodnik 4 sa dvokanalnim delom 4a predformi 8, što je beskonačna transportna traka 6 sastavljena od dva medjusobno paralelna reda 6a, 6b pločica 6c, što je izmedju transportne trake 6 i kabine 1, smešten sklop 15 za napajanje, prihvatanje, unošenje i duvanje predformi 8 i sklop 31 od četiri dvodelna alata 32 i što se sklop 15 za napajanje, prihvatanje, unošenje i duvanje predformi 8 sastoji od sklopa 16 pneumatskog napajanja i dva uredjaja 17, 18 za prenošenje predformi 8 postavljenih iznad sklopa 31 alata 32, gde je kabina 1 prizmatičnog oblika odvojivo postavljena uz radni deo mašine sa leve strane, što su na gornjem delu kabine 1 čeono postavljena vrata la, što se u donjem delu kabine 1 nalazi magacin lb za smeštaj predformi 8 i što je unutar kabine 1, vertikalno sa blagim ukošenjem, postavljen kontinualni elevator 2 sa nosačima 2a za hvatanje i vertikalno prenošenje predformi 8, pri čemu su nosači 2a postavljeni u tri medjusobno paralelna reda i medjusobno smaknuti u podužnom pravcu, **naznačena time**, što je ispod gornjeg kraja elevatora (2) postavljen levak (3) za prijem predformi (8), što se levak (3) nastavlja u pod nagibom postavljen jednokanalni sprovodnik (4) koji se pri donjem kraju nastavlja u dvokanalni deo (4a), stoje na prelazu izmedju sprovodnika (4) i dela (4a) postavljena razdelna jedinica (12) i što je dvokanalni deo (4a) naslonjen na selektor (5), postavljen na zadnjem kraju trake (6).
Prijava sadrži još 7 zavisnih patentnih zahteva.

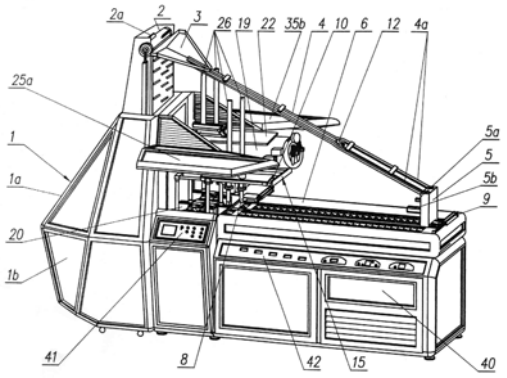


---

**(51)** ***B 29 D 23/18*** (2006.01) **(11) 51610**
***B 29 C 63/20*** (2006.01) **(13) B**
(21) P-2006/0071 (22) 30.01.2006.
(43) 07.08.2008.
**(54) POSTUPAK IZRADE ZAVOJNOG REBRASTOG CREVA SA OJAČANJEM**
METHOD OF SPIRAL RIBBED REINFORCED HOSE PRODUCTION
(73) TIGAR TEHNIČKA GUMA DOO, Nikole Pašića 213, 18300 Pirot, RS
(72) ne želi da bude naveden
(74) PROJEKTINOVA DOO, Bulevar kralja Aleksandra 193b, 11000 Beograd, RS
(57) Postupak izrade zavojnog rebrastog creva sa ojačanjem, **naznačen time**, se sastoji od tri faze pri čemu se u prvoj fazi odvija izrada delimično vulkaniziranih creva (2, 5), tekstilne armature (3) i nevulkanizirane gumene folije (26), što se u drugoj fazi odvija konfekcija delimično vulkaniziranih creva (2, 5), i što se u trećoj fazi vrši vulkanizacija konfekcioniranih elemenata zavojnog rebrastog creva (1).
Prijava sadrži još 3 zavisna patentna zahteva.

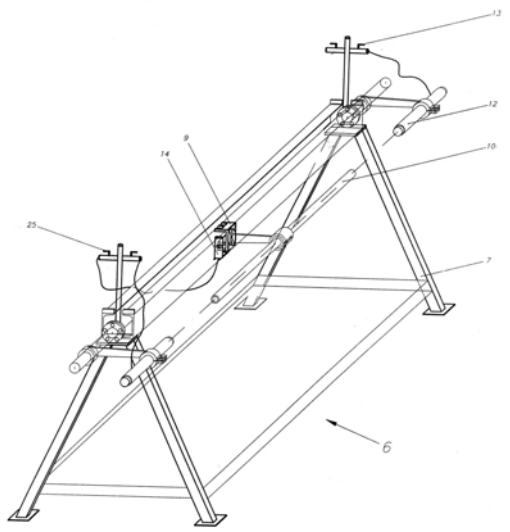

**(51)** ***B 42 D 15/10*** (2006.01) **(11) 51596**
**(13) B**
(21) P-2011/0020 (22) 19.03.2007.
(30) NL 17.03.2006. 1031396
(86) WO 19.03.2007. PCT/NL2007/050114
(87) WO 27.09.2007. WO 2007/108685
(96) 19.03.2007. 07715922.6
(97) 20.10.2010. EP2001687B 2010/42 EN
**(54) IDENTIFIKACIONI DOKUMENT SA TKANIM SLOJEM OJAČANJA**
IDENTITY DOCUMENT WITH TISSUE REINFORCEMENT
(73) SDU IDENTIFICATION B.V., Oudeweg 32, 2031 CC Haarlem, NL
(72) VAN DEN BERG, Jan, Blokalandpolderstraat 15, NL-2807 LH Gouda, NL
(74) POPOVIĆ, Srđa i ost., Takovska 19, 11000 Beograd, RS
(57) Identifikacioni dokument/bankovna kartica (1) koji sadrži veći broj broj međupovezanih slojeva i veći broj zaštitnih karakteristika protiv krivotvorenja uključujući i perforaciju izvedenu u pomenutim slojevima i koji sadrži sloj (8) ojačanja sa nitima koje se pružaju u blizini perforacija (3), **naznačen time**, što se opisane perforacije pružaju kroz opisani sloj ojačanja.
Prijava sadrži još 16 zavisnih patentnih zahteva.

---

**(51)** ***B 65 G 63/00*** (2006.01) **(11) 51595**
***B 66 C 19/00*** (2006.01) **(13) B**
(21) P-2010/0509 (22) 19.11.2007.
(30) EP 17.11.2006. 06388062
(86) WO 19.11.2007. PCT/EP2007/009987
(87) WO 22.05.2008. WO 2008/058763
(96) 19.11.2007. 07819863.7
(97) 25.08.2010. EP2089301B 2010/34 EN
**(54) POSTROJENJE ZA TRANSPORT TERETA NA BROD I/ILI SA BRODA**
PLANT FOR TRANSPORTING CARGO AND/OR FROM A SHIP
(73) APM Terminals Management B.V., Anna Van Saksenlaan 71, 2593 HW Den Haag, NL
(72) DE JONG, Angelo, Wilderveld 16, 3451 LG Vleuten, NL; UGLVIG, Laurids, Avenida de los Cortijos, s/n Valgrande 2-08-01, 11310 Sotogrande Cadiz, ES; KJELDSEN, Anders, Fondo 8, 11310 Sotogrande Cadiz, ES; JORDAN, Michael, Alex, 6219 Bullard Drive, Oakland, CA 94611, US
(74) RISTIĆ, Dragoslav i ost., Cara Lazara 7, 11000 Beograd, RS
(57) Postrojenje (1;20) za prenos tereta (23) na i/ili sa broda (24), obuhvata izdignutu šinsku strukturu (2) i kransku jedinicu (3);
- navedena izdignuta šinska struktura (2) postavljena je sa jedne strane broda (24) i obuhvata uzdužnu šinu (6) koja se prostire esencijalno paralelno u odnosu na uzdužnu osu broda;
- navedena kranska jedinica napravljena je tako da vrši tranfer tereta ili grupe tereta na i/ili sa broda, a poduprta je navedenom uzdužnom šinom i može da se premešta duž rečene uzdužne šine;
- navedena kranska jedinica dalje obuhvata prepust (10) i kolica (21) koja su povezana sa prepustom;
- navedeni prepust navedene kranske jedinice pruža se esencijalno uspravno u odnosu na uzdužnu šinu, tako da se jedan kraj prepušta pruža preko broda;
- navedeni prepust navedene kranske jedinice obuhvata dijagonalnu šinu (13) koja se pruža u pravcu koji je esencijalno dijagonalan u odnosu na uzdužnu šinu i esencijalno paralelan u odnosu na centralnu liniju prepušta;
- navedena kolica mogu da se premeštaju duž rečene dijagonalne šine navedenog prepušta; i - navedena kolica rečene kranske jedinice obuhvataju uređaj za podizanje (22) koji služi podizanju navedenog tereta ili navedene grupe tereta; **naznačeno time** da je navedena dijagonalna šina (13) navedenog prepušta (10) postavljena ispod navedene uzdužne šine (6) navedene izdignute šinske strukture (2).
Prijava sadrži još 18 zavisnih patentnih zahteva.

---

**(51)** ***B 67 D 1/08*** (2006.01) **(11) 51580**
**(13) B**
(21) P-2004/0824 (22) 19.03.2003.
(43) 27.10.2006.
(30) NL 19.03.2002. 1020202
(86) WO 19.03.2003. PCT/NL03/00205
(87) WO 25.09.2003. WO 03/078297
**(54) SKLOP BURETA ZA PIĆE SA GRLOM I SPOJNOG SREDSTVA**
ASSEMBLY OF A KEG WITH A NECK AND A CONNECTING DEVICE
(73) HEINEKEN TECHNICAL SERVICES B.V., 2 Weteringplantsoen 21, NL-1017 ZD Amsterdam, NL
(72) VAN DER KLAUW, Guido Petrus Johannes, C. Evertsenstraat 179, NL-1215 LP Hilversum, NL; BAX, Bart Jan, Molenstraat 11a, NL-2513 BH Den Haag, NL
(74) PLAVŠA, Drago i ost., Strumička 51, 11050 Beograd, RS

(57) Bure (2) za piće sa grlom (5) koje ima ventil ili ventilski sklop (20), pri čemu u blizini svog slobodnog kraja grlo (5) ima prirubnicu (8) koja se pruža upolje, sa gornjom površinom (14) i donjom površinom (9), pri čemu je donja površina (9) zakošena u odnosu na gornju površinu (14) i ima najmanje jedan u suštini ravan centralni deo za sprezanje sa spojnim sredstvom (15), **naznačeno time** što je unutar grla (5) smešteno srednje telo (27) kojim se aktivira najmanje jedan ventil (20) i kojim se kada je ventil (20) otvoren unutrašnji prostor bureta (2) za piće može dovesti u vezu sa uređajem za točenje, tako da tokom točenja montirano spojno sredstvo (15) ne dolazi u kontakt sa pićem ili drugim medijumom koji treba da se istoči iz bureta (2).
Prijava sadrži još 1 nezavisan i 9 zavisnih patentnih zahteva.

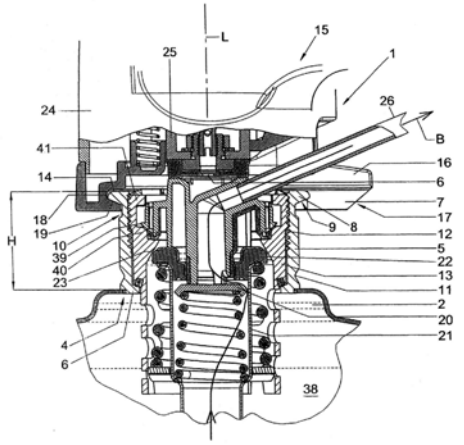


**(51)** ***C 01 F 11/02*** (2006.01) **(11) 51632**
***B 01 J 20/04*** (2006.01) **(13) B**
***B 01 D 53/68*** (2006.01)
***C 04 B 2/06*** (2006.01)
***B 01 D 53/50*** (2006.01)
(21) P-2011/0078 (22) 26.06.2006.
(30) BE 28.06.2005. 200500328
(86) WO 26.06.2006. PCT/EP2006/063542
(87) WO 04.01.2007. WO 2007/000433
(96) 26.06.2006. 06763882.5
(97) 22.12.2010. EP1896364B 2010/51 FR
**(54) PRAŠKASTA KREČNA KOMPOZICIJA, POSTUPAK ZA NJENO DOBIJANJE I NJENA UPOTREBA**
PULVERULENT LIME COMPOSITION, METHOD FOR THE PRODUCTION THEREOF, AND USE OF THE SAME
(73) S.A. LHOIST RECHERCHE ET DEVELOPPEMENT, Rue Charles Dubois, 28, 1342 Ottignies-Louvain-La-Neuve, BE
(72) LAUDET, Alain, Rue Théodore Baron 28, Boîte 4, B-5000 Namur, BE; GAMBIN, Amandine, Rue de L'Ognon 19, F-70270 Ternuay, FR
(74) ŽIVKOVIĆ, Zoran, Alekse Nenadovića 16, 11000 Beograd, RS

(57) Praškasta krečna kompozicija koja sadrži čestice kalcijum hidroksida sa specifičnom površinom BET jednakoj ili većoj pd 25 $m^2/g$ i ukupnom BJH zapreminom pora od desorpcije azota jednakoj ili većoj od 0,1 $cm^3/g$, **naznačena time**, što kompozicija dalje sadrži alkalni metal u količini jednakoj ili većoj od 0,2 mas % i jednakoj ili manjoj od 3,5 mas% u odnosu na ukupnu masu kompozicije.
Prijava sadrži još 14 zavisnih patentnih zahteva.

**(51)** ***C 07 C 259/06*** (2006.01) **(11) 51576**
***C 07 D 319/18*** (2006.01) **(13) B**
***A 61 P 35/00*** (2006.01)
***C 07 C 259/10*** (2006.01)
***A 61 K 31/185*** (2006.01)
(21) P-2011/0074 (22) 31.05.2006.
(30) EP 28.06.2005. 05013953
(86) WO 31.05.2006. PCT/EP2006/062799
(87) WO 04.01.2007. WO 2007/000383
(96) 31.05.2006. 06763427.9
(97) 17.11.2010. EP1896399B 2010/46 EN
**(54) BIFENIL I NAFTIL-FENIL DERIVATI HIDROKSAMSKE KISELINE**
BIPHENYL AND NAPHTHYL-PHENYL HYDROXAMIC ACID DERIVATIVES
(73) SIGMA-TAU INDUSTRIE FARMACEUTICHE RIUNITE S.P.A., Viale Shakespeare 47, 00144 Roma, IT
(72) PISANO, Claudio, Via Cherubini, 60/B, I-04011 Aprilia (LT), IT; GIANNINI, Giuseppe, Via Boezio, 46/B, I-00040 Pomezia (RM), IT; VESCI, Loredana, Via Elio Petri, 3, I-00128 Rome, IT; ZUNINO, Franco, Via dei Valtorta, 10, I-20127 Milan (MI), IT; DALLAVALLE, Sabrina, Via Monte Nero, 9, I-20059 Vimercate (MI), IT; MERLINI, Lucio, Via Crivelli, 14, I-20122 Milan (MI), IT; PENCO, Sergio, Via Milly Carla Mignone, 5, I-20133 Milan (MI), IT
(74) ŽIVKO MIJATOVIĆ AND PARTNERS, Takovska 58, 11000 Beograd, RS
(57) Jedinjenje Formule (I), **naznačeno time**, stoje:
- R1 odabrano iz grupe koja sadrži H, adamantil, Cl;
- R2 odabrano iz grupe koja sadrži OMe, Cl, CN, and $(CH_2)_nOH$, gde je n odabrano između 0, 1 i 2; ili - R2, zajedno sa prstenom za koji je vezan, formira metilen- ili etilen-dioksi derivat;
- R3 je odabrano između H i Cl; - A je jedna od sledećih dvovalentnih grupa: [CH=CH] (trans), [C=C], ili, zajedno sa prstenom za koji je vezano, formira naftil grupu.
Prijava sadrži još 22 zavisna patentna zahteva.

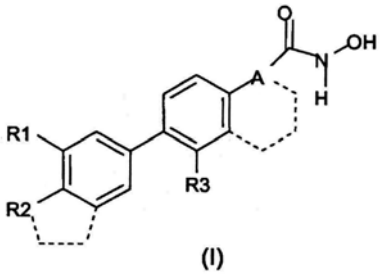

(I)

**(51)** ***C 07 C 311/08*** (2006.01) **(11) 51571**
***A 61 K 31/195*** (2006.01) **(13) B**
(21) P-2003/0417 (22) 30.11.2001.
(43) 25.05.2006.
(30) FR 30.11.2000. 0015477
(86) WO 30.11.2001. PCT/FR01/03784
(87) WO 06.06.2002. WO 02/44139 A1

**(54) CIKLOHEKSIL(ARIL)PROPANOLAMINI, NJIHOVO DOBIJANJE I FARMACEUTSKI PREPARATI**

CYCLOHEXYL(ALKYL)-PROPANOLAMINES, PREPARATION METHOD AND PHARMACEUTICAL COMPOSITIONS CONTAINING SAME

(73) SANOFI-AVENTIS, 174, avenue de France, F-75013 Paris, FR

(72) BOVY, Philippe R., 13, rue du 4 Septembre, F-78750 Mareil Marly, FR; CECCHI, Roberto, Piazza P. Gobetti, 1D, I-26900 Lodi, IT; COURTEMANCHE, Gilles, Rés. du Gr. Arbre BâtC, Apt.219 115-119, R.Malabry, F-92350 Le Plessis Robinson, FR; OLIVA, Ambrogio, Via Visconti 27, I-21047 Sarrono, IT; VIVIANI, Nunzia, Via Spluga 13, It-22063 Cantu', IT; CROCI, Tiziano, Via Cucchiari, 25, I-20156 Milano, IT

(74) POPOVIĆ Srđa i ost., Takovska 19, 11000 Beograd, RS

(57) Jedinjenje formule (I): gde : A je grupa formule (a) ili (b) gde R predstavlja atom vodonika ili halogena, -$S(O)_z(C_1\text{-}C_4)$alkil grupu, - $NHSO_2(C_1\text{-}C_4)$alkil grupu, $SO_2NH(C_1\text{-}C_4)$alkil grapu, -$NHSO_2$fenil $(C_1\text{-}C_4)$alkil grapu ili -$NHSO_2$fenil grapu, gde je dati fenil po potrebi supstituisan sa atomom halogena, sa $(C_1\text{-}C_4)$alkil grupom ili sa $(C_1\text{-}C_4)$alkoksi grupom.

$R_1$ predstavlja atom vodonika ili $(C_1\text{-}C_4)$alkil grupu, -$CO(C_1\text{-}C_4)$alkil grupu, fenil-$(C_1\text{-}C_4)$alkil grupu ili -CO-fenil grupu, gde je dati fenil po potrebi supstituisan atomom halogena ili $(C_1\text{-}C_4)$alkoksi grupom;

$R_2$ je atom vodonika, -$SO_2(C_1\text{-}C_4)$alkil grupa, -$SO_2$fenil-$(C_1\text{-}C_4)$alkil grupa ili -$SO_2$fenil grupa;

X podrazumeva prsten od 5 do 8 atoma, gde je dati prsten zasićen ili nezasićen, po potrebi supstituisan sa jednom ili dve $(C_1\text{-}C_4)$alkil grupe i vezana jedna ili dve karboksilne grupe; n, m, i z su nezavisno 0, 1 ili 2;

$R_3$ predstavlja atom vodonika ili halogena, $(C_1\text{-}C_6)$alkil grupu, $(C_1\text{-}C_4)$alkoksi grupu, -$COO(C_1\text{-}C_4)$alkil grupu, -CO-$(C_1\text{-}C_4)$alkil grapu, -$NHSO_2(C_1\text{-}C_4)$alkil, -$NHSO_2$fenil-$(C_1\text{-}C_4)$alkil grupu, -$NO_2$, -CN, - $CONR_4R_5$, -COOH, ili 4,5-dihidro-l,3-oksazol-2-il ili 4,4-dimetil-4,5-dihidro-1,3-oksazol-2-il grupu;

$R_4$ i $R_5$ predstavljaju, nezavisno, atom vodonika, fenil, $(C_1\text{-}C_4)$alkil grupu ili fenil-$(C_1\text{-}C_4)$alkil grupu; ili $R_4$ i $R_5$ zajedno sa azotom za koji su vezani, mogu obrazovati prsten sa 5 do 7 atoma, ukupno; i njihove soli ili solvati.

Prijava sadrži još 11 patentnih zahteva.

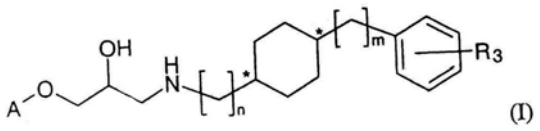

(I)

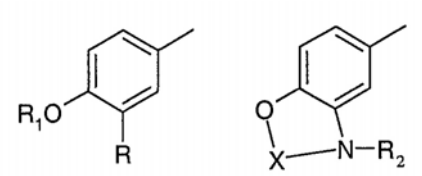

(a) (b)

---

**(51)** ***C 07 D 205/08*** (2006.01) **(11) 51613**
***C 07 D 317/30*** (2006.01) **(13) B**
***C 07 F 7/02*** (2006.01)
***C 07 D 413/06*** (2006.01)
***C 07 D 405/06*** (2006.01)
(21) P-2010/0505 (22) 18.12.2006.
(30) HU 20.12.2005. 0501164
(86) WO 18.12.2006. PCT/HU2006/000116
(87) WO 28.06.2007. WO 2007/072088
(96) 18.12.2006. 06831516.7
(97) 03.11.2010. EP1963260B 2010/44 EN

**(54) POSTUPAK ZA PROIZVODNJU EZETIMIBA I INTERMEDIJERA KOJI SE KORISTE U TOM PROCESU**

PROCESS FOR THE PRODUCTION OF EZETIMIBE AND INTERMEDIATES USED IN THIS PROCESS

(73) RICHTER GEDEON NYRT., Gyömröi út 19-21, 1103 Budapest, HU

(72) B"DI, József, Hársfa sétány 15, H-1203 Budapest, HU; ÉLES, János, Ördögszikla ut 2., H-1121 Budapest, HU; SZÖKE, Katalin, Kápolna tér 5. A/I, H-1105 Budapest, HU; VUKICS, Krisztina, Egry Józsefu. 15., H-1111 Budapest, HU; GÁTI, Tamás, Bartók Béla ut 15/B, H-1114 Budapest, HU; TEMESVÁRI, Krisztina, Erdökerülö u. 32., H-1157 Budapest, HU; KISS-BARTOS, Dorottya, Erkel Ferenc u. 33, H-2730 Albertirsa, HU

(74) PETOŠEVIĆ, Dušan, Kozjačka 15, 11000 Beograd, RS

(57) Postupak za proizvodnju ezetimiba predstavljenog formulom I, **naznačen time**, što se sastoji od sledećih koraka:

a) prevođenja etilen-glikola 4-(4Tfluorobenzoil)-buterne kiseline predstavljenog formulom II u 4-[2-(4-fluoro-fenil)-[l, 3]dioksolan-2-il]-buterne kiseline predstavljenog formulom IV preko nepripremljenog prelaznog jedinjenja predstavljenog formulom III,

b) acilovanja hiralnog jedinjenja predstavljenog formulom V sa jedinjenjem predstavljenim formulom IV kako bi se dobio acilovani derivat oksazolidinona predstavljen formulom VI, gde je jedinjenje predstavljeno formulom V odabrano iz grupe jedinjenja predstavljenih formulama Va, Vb, Vc, ili Vd i gde R1, R2 i R3 predstavljaju:

u slučaju Va: R1=Ph, R2=R3=H, u slučaju Vb: R1=R2=R3=Ph, u slučaju Vc: R1=metil, R2=Ph, R3-H u slučaju Vd: R1=izopropil, R2=R3=Ph, i gde Ph predstavlja fenil grupu.

c) stupanje u reakciju acilovanog oksazolidinona predstavljenog formulom VI sa zaštićenim iminom predstavljenim formulom VII, i izolovanje jedinjenja predstavljenog formulom VIII, gde R4 predstavlja silil grupu, ciklizacija jedinjenja koja je predstavljeno formulom VIII kako bi dobio zaštićeni derivat azetidinona opšte formule IX,

d) hidroliza ketal grupe jedinjenja predstavljenog formulom IX kako bi se dobilo jedinjenje predstavljeno formulom X,

e) enantioselektivna redukcija jedinjenja predstavljenog opštom formulom X kako bi se dobilo jedinjenje predstavljeno formulom XI, gde je jedno od hiralnih CBS-oksaborolidin jedinjenja predstavljenih formulama XIIa, XIIb, XIIc XIId odabrano kao katalizator, i

f) otklanjanje silil zaštićene grupe jedinjenja sa opštom formulom XI kako bi se kao krajni proizvod dobio ezetimib predstavljen formulom I,

Prijava sadrži još 7 zavisnih patentnih zahteva.

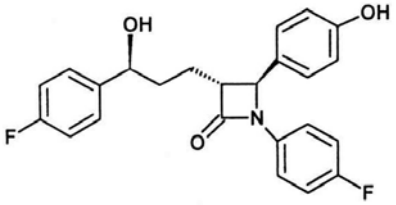

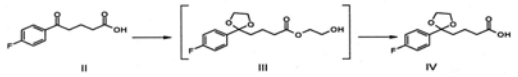

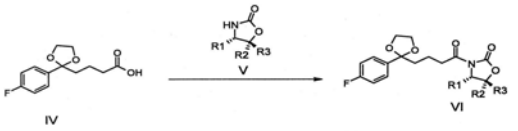

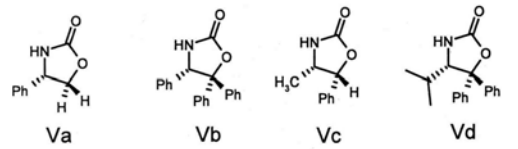

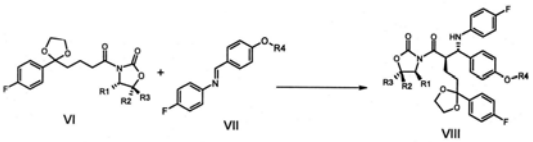

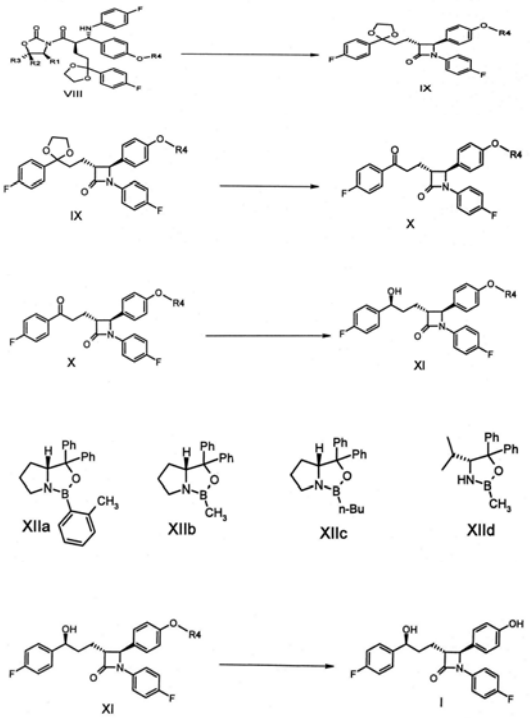

---

**(51)** ***C 07 D 209/42*** (2006.01) **(11) 51621**
***A 61 K 31/404*** (2006.01) **(13) B**
***A 61 P 9/00*** (2006.01)
(21) P-2002/1003 (22) 06.07.2001.
(43) 29.08.2003.
(30) FR 06.07.2000. 00/08791
(86) WO 06.07.2001. PCT/FR01/02169
(87) WO 08.11.2001. WO 01/83439

**(54) NOVI GAMA KRISTALNI OBLIK TERCIJALNE BUTILAMINSKE SOLI PERINDOPRILA, POSTUPAK DOBIJANJA I FARMACEUTSKE KOMPOZICIJE KOJE SADRŽE ISTO**

NOVEL GAMMA CRYSTALLINE FORM OF PERINDOPRIL TERTBUTYLAMINE SALT, PREPARATION METHOD AND PHARMACEUTICAL COMPOSITIONS CONTAINING SAME

(73) LES LABORATOIRES SERVIER, 1, rue Carle Hébert, F-92415 Courbevoie Cedex, FR

(72) PFEIFFER, Bruno, 47, rue Ernest Renan, F-953020 Saint Leu la Forêt, FR; GINOT, Yves-Michel, 8, quai Saint Laurent, F-45000 Orléans, FR; COQUEREL, Gérard, 192, rue de l'Eglise, F-76520 Boos, FR; BEILLES, Stéphane, 35, place de la Basse Vieille Tour, F-76000 Rouen, FR

(74) PETOŠEVIĆ, Slobodan i ost., Vele Nigrinove 16a, 11000 Beograd, RS

(57) γ kristalni oblik jedinjenja sa formulom (I): koji se karakteriše sfedećim dijagramom praha, koji je meren korišćenjem difraktometra (bakarna antikatoda). i koji je izražen u pogledu inter-planarnog rastojanja d, Bragovog ugla 2 teta, intenziteta i relativnog intenziteta (izraženog kao -procenat od najintezivnijeg rendgentskog zraka).

| Ugao 2 teta (º) | Inter-planarrno rastojanje d (Å) | Intenzitet | Relativni intenzitet (%) |
|---|---|---|---|
| 6.298 | 14.02 | 630 | 39.8 |
| 7.480 | 11.81 | 380 | 24 |
| 8.700 | 10.16 | 1584 | 100 |
| 9.276 | 9.53 | 318 | 20.1 |
| 10.564 | 8.37 | 526 | 33.2 |
| 11.801 | 7.49 | 54 | 3.4 |
| 12.699 | 6.96 | 86 | 5.4 |
| 13.661 | 6.48 | 178 | 11,2 |
| 14.095 | 6.28 | 163 | 10.3 |
| 14.332 | 6.17 | 290 | 18.3 |
| 14.961 | 5.92 | 161 | 10.2 |
| 15.793 | 5.61 | 128 | 8.1 |
| 16.212 | 5.46 | 179 | 11.3 |
| 16.945 | 5.23 | 80 | 5,1 |
| 17.291 | 5.12 | 92 | 5.8 |
| 17.825 | 4.97 | 420 | 26.5 |
| 18.100 | 4.90 | 159 | 10 |
| 18.715 | 4.74 | 89 | 5.6 |
| 19.017 | 4.66 | 118 | 7.4 |
| 19.362 | 4.58 | 134 | 8.5 |
| 19.837 | 4.47 | 133 | 8.4 |
| 20.609 | 4.31 | 95 | 6 |
| 21.232 | 4.18 | 257 | 16.2 |
| 21.499 | 4.13 | 229 | 14.5 |
| 21.840 | 4.07 | 127 | 8 |
| 22.129 | 4.01 | 191 | 12.1 |
| 22.639 | 3.92 | 137 | 8.6 |
| 23.000 | 3.86 | 88 | 5.6 |
| 23.798 | 3.74 | 147 | 9.3 |
| 24.170 | 3.68 | 70 | 4.4 |
| 25.066 | 3.55 | 167 | 10.5 |
| 25.394 | 3.50 | 165 | 10.4 |
| 26.034 | 3.42 | 84 | 5.3 |
| 26.586 | 3.35 | 75 | 4.7 |
| 27.541 | 3.24 | 74 | 4.7 |
| 28.330 | 3.15 | 85 | 5.4 |
| 29.589 | 3.02 | 96 | 6.1 |

Prijava sadrži još 10 patentnih zahteva.

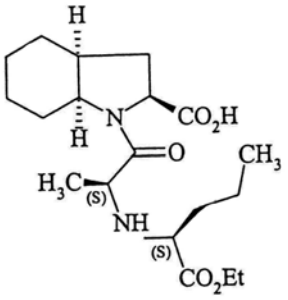


. $tBuNH_2$ (I)

**(51)** ***C 07 D 215/22*** (2006.01) **(11) 51582**
***C 07 D 487/08*** (2006.01) **(13) B**
***C 07 D 401/06*** (2006.01)
***C 07 D 417/06*** (2006.01)
***A 61 K 31/551*** (2006.01)
***A 61 P 31/04*** (2006.01)
***C 07 D 401/12*** (2006.01)
***A 61 K 31/47*** (2006.01)
***C 07 D 401/14*** (2006.01)
***C 07 D 215/227*** (2006.01)
***A 61 K 31/4995*** (2006.01)
(21) P-2011/0019 (22) 04.12.2007.
(30) EP 06.12.2006. 06125545
(86) WO 04.12.2007. PCT/EP2007/063319
(87) WO 12.06.2008. WO 2008/068272
(96) 04.12.2007. 07847817.9
(97) 27.10.2010. EP2099761B 2010/43 EN
**(54) ANTIBAKTERIJSKI KINOLINSKI DERIVATI**
ANTIBACTERIAL QUINOLINE DERIVATIVES
(73) JANSSEN PHARMACEUTICA NV, Turnhoutseweg 30, B-2340 Beerse, BE
(72) GUILLEMONT, Jérôme, Emile, Georges, Johnson & Johnson Pharmaceutical Research and Development A division of Janssen-Cilag Campus de Maigremont BP615, 27106 Val de Reuil Cedex, FR; DORANGE, Ismet, Sickla Alle 21, 13165 Nacka, SE; LANÇOIS, David, Francis, Alain, Johnson & Johnson Pharmaceutical Research and Development A division of Janssen-Cilag Campus de Maigremont BP615, 27106 Val de Reuil Cedex, FR; VILLALGORDO-SOTO, José, Manuel, Villapharma Research S.L. Parque tecnologico de Fuente Alamo Carretera El Estrecho-Lobosillo, Km.2.5, 30320 Fuente Alamo, Murcia, ES; SIMONNET, Yvan, René, Ferdinand, Johnson & Johnson Pharmaceutical Research and Development A division of Janssen-Cilag Campus de Maigremont BP 615, 27106 Val de Reuil Cedex, FR; MOTTE, Magali, Madeleine, Simone, Johnson & Johnson Pharmaceutical Research and Development A division of Janssen-Cilag Campus de Maigremont BP615, 27106 Val de Reuil Cedex, FR; ANDRIES, Koenraad, Jozef, Lodewijk, Marcel, Janssen Pharmaceutica N.V. Turnhoutseweg 30, 2340 Beerse, BE; KOUL, Anil, Janssen Pharmaceutica N.V. Turnhoutseweg 30, 2340 Beerse, BE
(74) RISTIĆ, Dragoslav i ost., Cara Lazara 7, 11000 Beograd, RS
(57) Jedinjenje sa formulom (Ia) ili (Ib) uključujući bilo koju njegovu stereohemijsku izomernu formu, **naznačeno time**, da p je celi broj jednak 1, 2, 3 ili 4; q je celi broj jednak nuli, 1, 2, 3 ili 4;
$R^1$ je vodonik, cijano, formil, karboksil, halo, alkil, $C_{2-6}$alkenil, $C_{2-6}$alkinil, haloalkil, hidroksi, alkiloksi, alkiltio, alkiltioalkil, -C=N-$OR^{11}$, amino, mono ili di(alkil)amino, aminoalkil, mono ili di(alkil)aminoalkil, alkilkarbonilaminoalkil, aminokarbonil, mono ili di(alkil)aminokarbonil, arilalkil, arilkarbonil, $R^{5a}R^{4a}$Nalkil, di(aril)alkil, aril, $R^{5a}R^{4a}$N-, $R^{5a}R^{4a}$N-C(=O)- ili Het;

$R^2$ je vodonik, alkiloksi, aril, ariloksi, hidroksi, merkapto, alkiloksialkiloksi, alkiltio, mono ili di(alkil)amino, pirolidino ili radikal sa formulom gde Y je $CH_2$, O, S, NH ili N-alkil;
$R^3$ je alkil, arilalkil, aril-O-alkil, aril-alkil-O-alkil, aril, aril-aril, Het, Het-alkil, Het-O-alkil, Het-alkil-O-alkil ili
$R^4$ je vodonik ili alkil;
$R^5$ je -C(=NH)-$NH_2$; arilalkil; Het-alkil; mono- ili dialkilaminoalkil; biciklo[2.2.1]heptil; Het ili aril; ili $R^4$ i $R^5$ zajedno sa atomom azota na kojeg su spojeni formiraju radikal koji je izabran iz grupe koja obuhvata azetidinil; 2,3-dihidroizoindol-l-il; tiazolidin-3-il; 1,2,3,6-tertahidropiridil; heksahidro-1H-azepinil; heksahidro-1H-l,4-diazepinil; heksahidro-1,4-oksazepinil; l,2,3,4-tetrahidroizokinolin-2-il; 2,5-diazabiciklo[2.2.1]heptil; 1,1-dioksid-tiomorfolinil; a svaki radikal je ponekad supstituisan sa 1, 2, 3 ili 4 supstituenata, a svaki supstituenat je nezavisno izabran iz alkila, haloalkila, alkilkarbonila, halo, arilalkila, hidroksi, alkiloksi, amino, mono- ili dialkilamino, mono- ili dialkilaminoalkila, alkiltio, alkiloksialkila, alkiltioalkila, arila, piperidinila koji je ponekad supstituisan sa alkilom, pirolidinilom koji je ponekad supstituisan sa arilalkilom, piridilom ili pirimidinilom; ili $R^4$ i $R^5$ zajedno sa atomom azota na kojeg su spojeni formiraju radikal koji je izabran iz grupe koja obuhvata piperidiriil ili piperazinil, a svaki od njih je supstituisan sa arilom, alkilkarbonilom, piperidinilom ili pirolidinilom koji je ponekad supstituisan sa arilalkilom;
$R^{4a}$ i $R^{5a}$ zajedno sa atomom azota na kojeg su spojeni formiraju radikal koji je izabran iz grupe koja obuhvata pirolidino, piperidino, piperazino, morfolino, 4-tiomorfolino, 2,3-dihidroizoindol-l-il, tiazolidin-3-il, 1,2,3,6-tertahidropiridil, heksahidro-1H-azepinil, heksahidro-1H-l,4-diazepinil, heksahidro-l,4-oksazepinil, 1,2,3,4-tetrahidroizokinolin-2-il, pirolinil, pirolil, imidazolidinil, pirazolidinil, 2-imidazolinil, 2-pirazolinil, imidazolil, pirazolil, triazolil, piridinil, piridazinil, pirimidinil, pirazinil i triazinil, a svaki radikal je ponekad supstituisan sa 1, 2, 3 ili 4 supstituenata, a svaki supstituenat je nezavisno izabran iz alkila, haloalkila, halo, arilalkila, hidroksi, alkiloksi, amino, mono- ili dialkilamino, alkiltio, alkiltioalkila, arila, piridila ili pirimidinila;
$R^6$ je aril[1] ili Het;
$R^7$ je vodonik, halo, alkil, aril ili Het;
$R^8$ je vodonik ili alkil;
$R^9$ je okso; ili
$R^8$ i $R^9$ zajedno formiraju radikal -CH=CH-N=;
$R^{11}$ je vodonik ili alkil; aril je homocikal izabran iz fenila, naftila, acenaftila ili tetrahidronaftila, a svaki od njih je ponekad supstituisan sa 1, 2 ili 3 supstituenta, a svaki supstituenat je nezavisno izabran iz hidroksi, halo, cijano, nitro, amino, mono- ili dialkilamino, alkila, $C_{2-6}$alkenila koji je ponekad supstituisan sa fenilom, haloalkilom, alkiloksi, haloalkiloksi, karboksilom, alkiloksikarbonilom, aminokarbonilom, morfolinilom ili mono- ili dialkilaminokarbonilom; aril[1] je homocikal izabran iz fenila, naftila, acenaftila ili tetrahidronaftila, a svaki je ponekad supstituisan sa 1, 2 ili 3 supstituenta, a svaki supstituenat je nezavisno izabran iz hidroksi, halo, cijano, nitro, amino, mono- ili dialkilamino, alkila, haloalkila, alkiloksi, alkiltio, haloalkiloksi, karboksila, alkiloksikarbonila, aminokarbonila, morfolinila, Het ili mono- ili dialkilaminokarbonila; Het je monociklički heterocikal koji je izabran iz N-fenoksipiperidinila, piperidinila, piperazina, pirolila, pirazolila, imidazolila, furanila, tienila, oksazolila, izoksazolila, tiazolila, izotiazolila, piridinila, pirimidinila, pirazinila ili piridazinila; ili biciklički heterocikal izabran iz kinolinila, kinoksalinila, indolila, benzimidazolila, benzoksazolila, benzizoksazolila, benzotiazolila, benzizotiazolila, benzofuranila, benzotienila, 2,3-dihidrobenzo[l,4]dioksinila ili benzo[l,3]dioksolila; a svaki monociklički i biciklički heterocikal je ponekad supstituisan sa 1, 2 ili 3 supstituenata, a svaki supstituenat je nezavisno izabran iz halo, hidroksi, alkila ili alkiloksi; pod uslovom da $R^5$ je različit od benzila; i njegov N-oksid, njegova farmaceutski prihvatljiva so i njegova rastvoriva materija.
Prijava sadrži još 31 zavisni patentni zahtev.

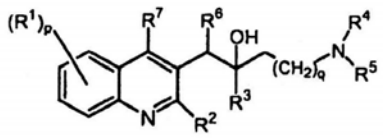
(Ia)

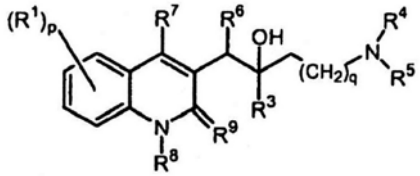
(Ib)

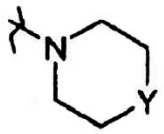

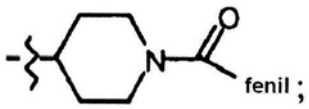
fenil ;

**(51)** ***C 07 D 239/84*** (2006.01) **(11) 51630**
***A 61 K 31/517*** (2006.01) **(13) B**
***A 61 P 25/28*** (2006.01)
(21) P-2010/0564 (22) 08.08.2005.
(30) US 06.08.2004. 599811P
(86) WO 08.08.2005. PCT/US2005/028191
(87) WO 16.02.2006. WO 2006/017836
(96) 08.08.2005. 05785256.8
(97) 06.10.2010. EP1776349B 2010/40 EN

**(54) DERIVATI 2-AMINO-KVINAZOLINA KORISNI KAO INHIBITORI β-SEKRETAZE (BACE)**

2-AMINO-QUINAZOLINE DERIVATIVES USEFUL AS INHIBITORS OF BETA-SECRETASE (BACE)

(73) JANSSEN PHARMACEUTICA N.V., Turnhoutseweg 30, 2340 Beerse, BE

(72) BAXTER, Ellen, 148 North Keswick Avenue, Glenside, PA 19038, US; BISCHOFF, Francois, Paul, Lijsterwweg 7, B-2350 Vossellar, BE; BOYD, Robert, 3 Danbridge Drive, Horsham, PA 19044, US; BRAEKEN, Mirielle, Bloemenstraat 16, B-2340 Vimmeren, BE; COATS, Steven, 1029 Brayton Court, Quakertown, PA 18951, US; HUANG, Yifang, 303 Walden Lane, Lansdale, PA 19446, US; JORDAN, Alfonzo, 329 Regency Drive, North Wales, PA 19454, US; LUO, Chi, 513 Windmere Way, New Hope, PA 18938, US; MERCKEN, Marc, Hubert, Warandestraat 61, BE-2300 Turnhout, BE; REYNOLDS, Charles, H., 171 Forest Trail Drive, Lansdale, PA 19477, US; ROSS, Tina, Morgan, 101 Rosemont Lane, Royersford, PA 19468, US; TOUNGE, Brett, A., 1014 Blue Rock Lane, Blue Bell, PA 19422, US; SCHULZ, Mark, 4015 Carriage Drive, Skippack, PA 19474, US; DE WINTER, Hans, Louis, Jos, De Roskam 35, BE-00000 Schilde, BE; PIETERS, Serge, Maria, Aloysius, Pizarrostraat 2, NL-4562 AR Hulst, NL; REITZ, Allen, B., 109 Greenbriar Road, Lansdale, PA 19446, US

(74) ĆOSOVIĆ, Dragoljub, Vojvode Dragomira 27, 11000 Beograd, RS

(57) Jedinjenje prikazano formulom (I) **naznačeno time** da: se $R^0$ bira iz grupe koju čine vodonik, metil i $CF_3$; se $R^1$ bira iz grupe koju čine vodonik, hidroksi, metil, etil, trifluorometil, 2,2,2-trifluoroetil, metoksi, etoksi i metil-karbonil; se $A^1$ bira iz grupe koju čine etil, 1-metil-etil, (1)-(R)-metil-etil, (1)-(S)-metil-etil, 1-n-propil-etil, (1)-(R)-n-propil-etil, (1)-(S)-n-propil-etil, 1-izopropil-e'til, (1)-(R)-izopropil-etil, (1)-(S)-izopropil-etil, 1-cikloheksil-etil, (1)-(R)-cikloheksil-etil, (1)-(S)-cikloheksil-etil, 1-fenil-etil, 1-(4-hidroksibenzil)-etil, (1)-(R)-(4-hidroksibenzil)-etil, (1)-(S)-(4-hidroksibenzil)-etil, 1 -(1 -karboksi-2-hidroksi-etil), 1 -(S)-(l -karboksi-2-hidroksi-etil), 1 -(R)-(1 -karboksi-2-hidroksi-etil), 1 -(1 -karboksi-2-t-butoksi-etil), 1 -(R)-(l -karboksi-2-t-butoksi-etil), 1 -(1 -karboksi-2-benziloksi-etil), 1 -(S)-(l -karboksi-2-benziloksi-etil), 1 -(R)-(l -karboksi-2-benziloksi-etil), 1 -(1 -metoksi-karbonil-2-benziloksi-etil), 1 -(S)-(1 -metoksi-karbonil-2-benziloksi-etil), 1 -(R)-(1-metoksi-karbonil-2-benziloksi-etil), n-propil, 1 -hidroksimetil-n-propil, (1)-(R)-hidroksimetil-n-propil, (1)-(S)-hidroksimetil-n-propil, 1-(dimetil)-n-propil, 1-(n-propil)-n-propil, 1-izopropil-n-propil, (1)-(S)-izopropil-n-propil, (1)-(R)-izopropil-n-propil, 1-(n-pentil)-n-propil, 1-n-oktil-n-propil, 1-cikloheksil-n-propil, (1)-(R)-cikloheksil-n-propil, (1)-(S)-cikloheksil-n-propil, 1-fenil-n-propil, 1-(4-hlorofenil)-n-propil, 1 -(4-metilfenil)-n-propil, 1 -(4-metoksifenil)-n-propil, 1 -(4-bifenil)-n-propil, 1 -(N-piperidini-karbonil-n-propil)-n-propil, 1 -(4-tetrahidropiranil)-n-propil, (1)-(R)-(4-tetrahidropiranil)-n-propil, (1)-(S)-(4-tetrahidropiranil)-n-propil, 1 -(4-hidroksi-cikloheksil)-n-propil, 1 -(N-metil-N-cikloheksil-aminokarbonil)-n-propil, (1)-(R)-(N-metil-N-cikloheksil-aminokarbonil)-n-propil, (1)-(S)-(N-metil-N-cikloheksil-aminokarbonil)-n-propil, 1 -(1,4-deoksaspiro[4.5]dekan)-n-propil, (1)-(R)-( 1,4-deoksaspiro [4.5]dekan)-n-propil, (1)-(S)-(1,4-deoksaspiro[4.5]dek-8-il)-n-propil, (1)-(R)-((4R)-hidroksicikloheksil)-n-propil, 1-(cikloheksan-4-on)-n-propil, (1)-(R)-(cikloheksan-4-on)-n-propil, (1)-(S)-(cikloheksan-4-on)-n-propil, 1-piranil-n-propil, (1)-(S)-piranil-n-propil, n-butil, 1-propi 1-n-butil, 1-fenil-n-butil, 1-(cikloheksilkarbonilaminometil)-etil, 1-(N-cikloheksil-N-metil-arninokarboniletil)-n-propil, 1 -(2-metil-piperinidilkarbonil-n-propil)-n-propil i 1-(4-metil-piperinidilkarbonil-n-propil)-n-propil.

$Q^1$ se bira iz grupe koju čine -O-, -S-, -C(O)-, -C(S)-, -C(O)O-, -OC(O)-, $-NR^A-$, $-NR^A-C(O)-$,$-C(O)-NR^A-$, $-NR^A-C(S)-$, $-C(S)-NR^A-$, $-NR^A-SO_2$, $-SO_2NR^A-$, $-NR^A-SO-$, $-SO-NR^A$, $-NR^A-C(O)O-$, $-OC(O)-NR^A-$, $-O-SO_2-NR^A-$, $-NR^A-SO_2-O-$, $-NR^A-C(O)-NR^B-$, $-NR^A-C(S)-NR^B-$ i $-NR^A-SO_2-NR^B-$; pri čemu se svaki $R^A$ i $R^B$ nezavisno bira iz grupe koju čine vodonik, $C_{1-8}$alkil, $C_{1-4}$alkil supstituisan hidroksi grupom, $C_{1-4}$alkil supstituisan grupom $C_{1-4}$aralkiloksi, cikloalkil, aril, heteroaril, heterocikloalkil, cikloalkil-$C_{1-4}$alkil-, $C_{1-4}$aralkil, heteroaril-C1$_{-4}$alkil-, heterocikloalkil-$C_{1-4}$alkil i spiro-heterociklil; pri čemu je cikloalkil, aril, heteroaril, heterocikloalkil ili spiro-heterociklil, bilo samostalan ili kao deo supstituentske grupe, opcionalno supstituisan sa jednim ili više supstituenta koji se nezavisno biraju iz grupe koju čine halogen, hidroksi, okso, karboksi, $C_{1-4}$alkil, $C_{1-4}$alkoksi, $C_{1-4}$alkoksi-karbonil, nitro, cijano, amino, $C_{1-4}$alkilamino, di($C_{1-4}$alkil)amino, $-SO_2-N(R^cR^D)$, 5-tetrazolil i 1-(1,4-dihidro-tetrazol-5-on); pri čemu se $R^C$ i $R^D$ nezavisno biraju iz grupe koju čine vodonik i $C_{1-4}$alkil; se $R^2$ bira iz grupe koju čine $C_{1-10}$ alkil, cikloalkil, aril, bifenil, delimično nezasićeni karbociklil, heteroaril, heterocikloalkil, cikloalkil- $C_{1-4}$alkil-, $C_{1-4}$aralkil, delimično nezasićeni karbociklil-$C_{1-4}$alkil-, heteroaril-$C_{1-4}$alkil-, heterocikloalkil-$C_{1-4}$alkil- i spiro-heterociklil; pri čemu je $C_{1-10}$alkil, cikloalkil, aril, delimično nezasićeni karbociklil, heteroaril, heterocikloalkil ili spiro-heterociklil, bilo samostalan ili kao deo supstituentske grape, opcionalno supstituisan sa jednim ili više supstituenta koji se nezavisno biraju iz grupe koju čine halogen, hidroksi, okso, karboksi, -C(O)-$C_{1-4}$alkil, -C(O)-$C_{1-4}$aralkil, -C(Q)O-$C_{1-4}$alkil, -C(O)O-$C_{1-4}$aralkil, -$C_{1-4}$alkil-C(O)O-$C_{1-4}$a1kil, -$C_{1-4}$alkil-S- $C_{1-4}$alkil, -C(O)-N($R^LR^M$), -$C_{1-4}$alkil-C(O)-N($R^LR^M$), -$NR^L$-C(O)-$C_{1-4}$alkil, $-SO_2-N(R^LR^M)$, -$C_{1-4}$alkil-$SO_2$-N($R^LR^M$), $C_{1-6}$alkil, $C_{1-4}$alkil supstituisan fluorom, $C_{1-4}$alkil supstituisan hidroksi grupom, $C_{1-4}$alkil supstituisan grupom karboksi, $C_{1-4}$aIkoksi, -O-$C_{1-4}$aralkil, -O-

(tetrahidropiranil), -NH-C(O)-O-$CH_2$-(tetrahidropiranil), -N($CH_3$)-C(O)0O-$CH_2$-(tetrahidropiranil), nitro, cijano, amino, $C_{1-4}$alkilamino, di($C_{1-4}$alkil)amino, fenil, 5-tetrazolil i 1 -(1,4-dihidro-tetrazol-5-on); pri čemu je fenil ili tetrahidropiranil opcionalno supstituisan sa jednim ili više supstituenata koji se nezavisno biraju iz grupe koju čine halogen, hidroksi, okso, karboksi, -C(O)O-$C_{1-4}$alkil, -C(O)-$C_{1-4}$a1kil, -O-C(O)-$C_{1-4}$alkil, -$C_{1-4}$alkil-OC(O)-$C_{1-4}$alkil, -O-$C_{1-4}$aralkil, $C_{1-4}$alkil, $C_{1-4}$alkil supstituisan fluorom, $C_{1-4}$alkil supstituisan hidroksi grupom, $_{C1-4}$alkoksi, nitro, cijano, amino, $C_{1-4}$alkilamino i di($C_{1-4}$alkil)amino; pri čemu se svaki $R^L$ i $R^M$ nezavisno bira iz grupe koju sačinjavaju vodonik i $C_{1-4}$alkil; b je prirodni broj od 0 do 1;

$L^1$ se bira iz grupe koju čine čine -O-, -$S(O)_{0-2}$-, -$NR^N$-, -C(O)-, -C(S)-, -$C_{1-4}$alkil-, -($C_{1-4}$alkil supstituisan hidroksi grupom)- i -($C_{2-4}$alkenil)-; pri čemu se $R^N$ bira iz grupe koju čine vodonik i $C_{1-4}$alkil; se $R^3$ bira iz grupe koju čine $C_{1-6}$alkil, $C_{2-6}$alkenil, cikloalkil, delimično nezasićeni karbociklil, aril, bifenil, heteroaril, heterocikloalkil, cikloalkil-$C_{1-4}$alkil-, $C_{1-4}$aralkil, heteroaril-$C_{1-4}$alkil-, heterocikloalkil-$C_{1-4}$alkil- i spiro-heterociklil; pri čemu je $C_{1-6}$alkil, cikloalkil, delimično nezasićeni karbociklil, aril, heteroaril, heterocikloalkil ili spiro-heterociklil, bilo samostalan ili kao deo supstituentske grupe, opcionalno supstituisem sa jednim ili više supstituenta koji se nezavisno biraju iz grupe koju čine halogen, hidroksi, okso, karboksi, $C_{1-4}$alkil, $C_{1-4}$alkil supstituisan hidroksi grupom, $C_{1-4}$alkil supstituisan halogenom, $C_{1-4}$alkil supstituisan grupom cijano, $C_{2-4}$alkenil, $C_{2-4}$alkinil, $C_{1-4}$alkoksi, $C_{1-4}$alkoksi supstituisan halogenom, nitro, cijano, -$R^5$, -O-$R^5$, -S-$R^5$, -$SO_2$-$R^5$, -$SO_2$-$NR^p$-$R^5$, -$NR^p$-$SO_2$-$R^5$, -$NH_2$, -N($R^P$)-$R^S$, -C(O)-$R^5$, -C(O)-$NH_2$, -C(O)-$NR^p$-$R^5$, -$NR^p$-C(O)-$R^5$ i -$NR^p$-C(O)O-$R^5$; pri čemu se $R^5$ bira iz grupe koju čine $C_{1-4}$alkil, aril, $C_{1-4}$aralkil, delimično nezasićeni karbociklil, cikloalkil, cikloalkil-$C_{1-4}$alkil-, delimično nezasićeni karbociklil-$C_{1-4}$alkil-, heteroaril, heteroaril-$C_{1-4}$alkil-, heterocikloalkil i heterociklil-$C_{1-4}$alkil-; pri čemu je aril, $C_{1-4}$aralkil, delimično nezasićeni karbociklil, cikloalkil, heteroaril ili heterocikloalkil, bilo samostalan ili kao deo supstituentske grupe, opcionalno supstituisan sa jednim ili više supstituenta koji se nezavisno biraju iz grupe koju čine $C_{1-4}$alkil, $C_{1-4}$alkoksi, halogen, hidroksi, karboksi, amino, $C_{1-4}$alkilamino, di($C_{1-4}$alkil)amino, cijano i nitro; pri čemu se svaki $R^p$ bira iz grupe koju čine vodonik, $C_{1-8}$alkil, $C_{1-4}$alkil supstituisan hidroksi grupom, $C_{1-4}$alkil supstituisan grupom $C_{1-4}$aralkiloksi, cikloalkil, aril, heteroaril, heterocikloalkil, cikloalkil-$C_{1-4}$alkil-, $C_{1-4}$aralkil, heteroaril-$C_{1-4}$alkil-, heterocikloalkil-$C_{1-4}$alkil i spiro-heterociklil; pri čemu je cikloalkil, aril, heteroaril, heterocikloalkil ili spiro-heterociklil, bilo samostalan ili kao deo supstituentske grupe, opcionalno supstituisan sa jednim ili više supstituenta koji se nezavisno biraju iz grupe koju čine halogen, hidroksi, okso, karboksi, $C_{1-4}$alkil, $C_{1-4}$alkoksi, $C_{1-4}$alkoksi-karbonil, nitro, cijano, amino, $C_{1-4}$alkilamino, di($C_{1-4}$alkil)amino, -$SO_2$-N($R^SR^T$), 5-tetrazolil i 1-(1,4-dihidro-tetrazol-5-on); pri čemu se svaki $R^S$ i $R^T$ nezavisno bira iz grupe koju čine vodonik i $C_{1-4}$alkil; a je prirodni broj od 0 do 3; se svaki $R^{10}$ nezavisno bira iz grupe koju čine hidroksi, halogen, $C_{1-4}$alkil, $C_{1-4}$alkoksi, $C_{1-4}$alkil supstituisan halogenom, $C_{1-4}$alkoksi supstituisan halogenom, -C(O)-$NR^vR^w$, -$SO_2$-$NR^vR^w$, -C(O)- $C_{1-4}$alkil i -$SO_2$-$C_{1-4}$alkil; pri čemu se svaki $R^v$ i $R^w$ nezavisno biraju iz grupe koju čine vodonik i $C_{1-4}$alkil; alternativno $R^v$ i $R^w$ , zajedno sa azotovim atomom na kojeg su vezani, čine 5-ero do 6-eročlani zasićeni, delimično nezasićeni ili aromatični prsten; uz uslov da se halogeni elementi u halogenom supstituisanim $C_{1-4}$alkilnim i $C_{1-4}$alkoksi grupama biraju iz grupe koju čine hloro i fluoro; ili njihova farmaceutski prihvatljiva so.

Prijava sadrži još 19 zavisnih patentnih zahteva.

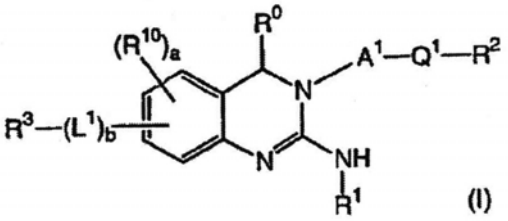


**(51)** ***C 07 D 239/84*** (2006.01) **(11) 51631**
***A 61 P 25/28*** (2006.01) **(13) B**
***A 61 K 31/517*** (2006.01)
(21) P-2010/0565 (22) 08.08.2005.
(30) US 06.08.2004. 599810P
(86) WO 08.08.2005. PCT/IB2005/002595
(87) WO 09.03.2006. WO 2006/024932
(96) 08.08.2005. 05780525.1
(97) 29.09.2010. EP1789398B 2010/39 EN

**(54) DERIVATI 2-AMINO-KVINAZOLINA KORISNI KAO INHIBITORI β-SEKRETAZE (BACE)**

2-AMINO-QUINAZOLINE DERIVATIVES USEFUL AS INHIBITORS OF β-SECRETASE (BACE)

(73) JANSSEN PHARMACEUTICA N.V., Turnhoutseweg 30, 2340 Beerse, BE

(72) BISHOFF, François, Paul, Lijssterweg 7, B-2350 Vopsselar, BE; BRAEKEN, Mirielle, Bloemenstraat 16, B-2340 Vimmeren, BE; PIETERS, Serge, Maria, Aloysius, Kievistraat 14 , NL-4561 LL Jost, NL; MERCKEN, Marc, Hubert, Warandestraat 61, BE-2300 Turnhout, BE; DE WINTER, Hans, Louis, Jos, De Roskam 35, BE-2970 Schilde, BE; BERTHELOT, Dieder, Jean-Claude, Otto Veinsstraat 10 bus 12, B-2000 Antwerp, BE

(74) ĆOSOVIĆ, Dragoljub, Vojvode Dragomira 27, 11000 Beograd, RS

(57) Jedinjenje prikazano formulom (III) **naznačeno time** da: se $R^0$ bira iz grupe koju čine vodonik, metil i $CF_3$; se $R^1$ bira iz grupe koju čine vodonik, hidroksi, metil, etil, trifluorometil, 2,2,2-trifluoroetil, metoksi, metoksi i metil-karbonil; se $R^6$ bira iz grupe koju čine $C_{1-6}$alkil i hidroksi grupom supstituisan $C_{1-8}$alkil; je d prirodni broj od 0 do 1;

se $L^2$ bira iz grupe koj čine -O-, -S(O)$_{0-2}$-, i –NR$^Q$-; pri čemu se RQ bira iz grupe koju čine vodonik i $C_{1-4}$alkil; se $R^7$ bira iz grupe koju čine cikloalkil, cikloalkil-$C_{1-4}$alkil, aril, $C_{1-4}$alkil-aril, aril-$C_{1-4}$alkil, delimično nezasićeni karbociklil, delimično nezasićeni karbociklil-$C_{1-4}$alkil, heteroaril, heteroaril-$C_{1-4}$alkil, heterocikloalkil i heterocikloalkil-$C_{1-4}$alkil; pri čemu je aril, cikloalkil, delimično nezasićeni karbociklil, heteroaril ili heterocikloalkil, bilo samostalan ili kao deo supstituentske grupe, opcionalno supstituisan sa jednim ili više supstituenta koji se nezavisno biraju iz grupe koju čine $C_{1-4}$alkil, $C_{1-4}$alkoksi, halogenom supstituisan $C_{1-4}$alkil, halogenom supstituisan $C_{1-4}$alkoksi, hidroksi grupom supstituisan $C_{1-4}$alkil, hidroksi, karboksi, cijano, nitro, amino, $C_{1-4}$alkilamino di($C_{1-4}$alkil)amino, 5-tetrazolil i 1-(1,4-dihidro-tetrazol-5-on); se $L^3$ bira iz grupe koju čine -O-, -S-, -C(O)-, -C(S)-, -C(O)O-, -OC(O)-, -NR$^A$-, -N(CN)-, -NR$^A$-C(O)-, -C(O)-NR$^A$-, -NR$^A$-C(S)-, -C(S)-NR$^A$-, -NR$^A$-SO$_2$-, -SO$_2$-NR$^A$-, -NR$^A$-SO-, -SO-NR$^A$, -NR$^A$-C(O)O-, -OC(O)-NR$^A$-, -O-SO$_2$-NR$^A$-, -NR$^A$-SO$_2$-O-, -NR$^A$-C(O)-NR$^B$-, -NR$^A$-C(S)-NR$^B$- i -NR$^A$-SO$_2$-NR$^B$-; pri čemu se svaki $R^A$ i $R^B$ nezavisno bira iz grupe koju čine vodonik, $C_{1-8}$alkil, hidroksi grupom supstituisan $C_{1-4}$alkil, $C_{1-4}$aralkiloksi grupom supstituisan $C_{1-4}$alkil, cikloalkil, aril, heteroaril, heterocikloalkil, cikloalkil-$C_{1-4}$alkil-, $C_{1-4}$aralkil, heteroaril-$C_{1-4}$alkil-, heterocikloalkil-$C_{1-4}$alkil- i spiro-heterociklil; pri čemu je cikloalkil, aril, heteroaril, heterocikloalkil ili spiro-heterociklil, bilo da je samostalan ili deo supstituentske grupe, opcionalno supstituisan sa jednim ili više supstituenata koji se nezavisno biraju iz grupe koju čine halogen, hidroksi, okso, karboksi, $C_{1-4}$alkil, $C_{1-4}$alkoksi, $C_{1-4}$alkoksi-karbonil, nitro, cijano, amino, $C_{1-4}$alkilamino, di($C_{1-4}$alkil)amino, -SO$_2$-N(R$^c$R$^D$), 5-tetrazolil i 1-(1,4-dihidro-tetrazol-5-on); pri čemu se svaki $R^C$ i $R^D$ nezavisno biraju iz grupe koju čine vodonik i $C_{1-4}$alkil; se $R^8$ bira iz grupe koju čine $C_{1-10}$alkil, cikloalkil, aril, bifenil, delimično nezasićeni karbociklil, heteroaril, heterocikloalkil, cikloalkil-$C_{1-4}$alkil-, $C_{1-4}$aralkil, delimično nezasićeni karbociklil-$C_{1-4}$alkil-, heteroaril-$C_{1-4}$alkil-, heterocikloalkil-C1$_{-4}$alkil- i spiro-heterociklil; pri čemu je $C_{1-!0}$alkil, cikloalkil, aril, delimično nezasićeni karbociklil, heteroaril, heterocikloalkil ili spiro-heterociklil, bilo da je samostalan ili deo supstituentske grupe opcionalno supstituisan sa jednim ili više supstituenata koji se nezavisno biraju iz grupe koju čine halogen, hidroksi, okso, karboksi, -C(O)-$C_{1-4}$alkil, -C(O)-$C_{1-4}$aralkil, -C(O)O-$C_{1-4}$alkil, -C(O)O-$C_{1-4}$aralkil, -$C_{1-4}$alkil-C(O)O-$C_{1-4}$alkil, -$C_{1-4}$alkil-S-$C_{1-4}$alkil, -C(O)-N(R$^L$R$^M$), -$C_{1-4}$alkil-C(O)-N(R$^L$R$^M$), -NR$^L$-C(O)-$C_{1-4}$alkil, -SO$_2$-$C_{1-4}$, -SO$_2$-aril, -SO$_2$-N(R$^L$R$^M$), -$C_{1-4}$alkil-SO$_2$-N(R$^L$R$^M$), $C_{1-4}$alkil, fluorom supstituisan $C_{1-4}$alkil, hidroksi grupom supstituisan C1-$_4$alkil, karboksi grupom supstituisan $C_{1-4}$alkil, $C_{1-4}$alkoksi, fluorom supstituisan $C_{1-4}$alkoksi, nitro, cijano, amino, $C_{1-4}$alkilamino, di($C_{1-4}$alkil)amino, fenil i heteroaril; pri čemu je fenil ili heteroaril opcionalno supstituisan sa jednim ili više supstituenata koji se nezavisno biraju iz grupe koju čine halogen, hidroksi, okso, karboksi, -C(O)O-$C_{1-4}$alkil, -C(O)-$C_{1-4}$alkil, $C_{1-4}$alkil, fluorom supstituisan $C_{1-4}$alkil, $C_{1-4}$alkoksi, nitro, cijano, amino, $C_{1-4}$alkilamino i di($C_{1-4}$alkil)amino; pri čemu se svaki $R^L$ i $R^M$ nezavisno biraju iz grupe koju čine vodonik, $C_{1-4}$alkil i cikloalkil; je a prirodni broj od 0 do 3; se svaki $R^{10}$ nezavisno bira iz grupe koju čine hidroksi, halogen, $C_{1-4}$alkil, $C_{1-4}$alkoksi, halogenom supstituisan $C_{1-4}$alkil, halogenom supstituisan $C_{1-4}$alkoksi, -C(O)-NR$^v$R$^w$, -SO$_2$NR$^v$R$^w$, -C(O)-$C_{1-4}$alkil i -SO$_2$-$C_{1-4}$alkil; pri čemu se svaki $R^v$ i $R^w$ nezavisno biraju iz grupe koju čine vodonik i $C_{1-4}$alkil; alternativno $R^v$ i $R^w$, zajedno sa azotovim atomom na kojeg su vezani, stvaraju 5-ero do 6-eročlani zasićeni, delimično nezasićeni ili aromatični prsten; uz uslov da se halogeni elementi u halogenim supstituisanim $C_{1-4}$alkilnim i $C_{1-4}$alkoksi grupama biraju iz grupe koju čine hloro i fluoro; ili njegove farmaceutski prihvatljive soli.
Prijava sadrži još 16 zavisnih patentnih zahteva.

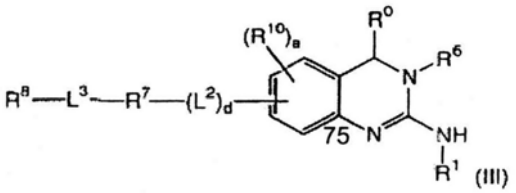


**(51)** ***C 07 D 307/84*** (2006.01) **(11) 51603**
***C 07 D 307/80*** (2006.01) **(13) B**
***C 07 D 407/10*** (2006.01)
***C 07 D 409/06*** (2006.01)
***C 07 D 407/04*** (2006.01)
***C 07 D 471/04*** (2006.01)
***A 61 K 31/34*** (2006.01)
(21) P-2003/0129 (22) 21.08.2001.
(43) 25.05.2006.
(30) FR 23.08.2000. 00/10834
(86) WO 21.08.2001. PCT/FR01/02640
(87) WO 28.02.2002. WO 02/16339 A1

**(54) DERIVATI AMINOALKILBENZOIL-BENZOFURANA ILI BENZOTIOFENA, POSTUPAK ZA NJIHOVO PRIPREMANJE I FARMACEUTSKI OBLICI KOJI IH SADRŽE**

AMINOALKYLBENZOYL-BENZOFURAN OR BENZOTHIOPHENE DERIVATIVES, METHOD FOR PREPARING SAME AND COMPOSITIONS CONTAINING SAME

(73) SANOFI-AVENTIS, 174 Avenue de France, FR-75013 Paris, FR

(72) ASSENS, Jean-Louis, 13, rue des Serpolets, F-34790 Grabels, FR; BERNHART, Claude, 21, rue de la Frigoule, F-34980 Saint-Gely-du-Fesc, FR; CABANEL-HAUDRICOURT, Frédérique, 5 bis, route de St Georges, F-34570 Pignan, FR; GAUTIER, Patrick, Lieu-dit Manavielle, 13, chemin des Peyroules, F-34660 Cournonterral, FR; NISATO, Dino, 2, rue Terre Rouge, F-34680 Saint Georges d'Orques, FR

(74) POPOVIĆ, Srđa i ost., Takovska 19, 11000 Beograd, RS

(57) Derivati benzofurana ili benzotiofena opšte formule: kao i njihove farmaceutski prihvatljive soli, gde: A predstavlja $C_1$-$C_5$ alkilen, linearan ili račvast, po izboru supstituisan hidroksilnom grupom, ili A predstavlja grupu opšte formule: -$R_{19}$-O-$R_{20}$- (h) u kojoj $R_{19}$ ili $R_{20}$, isti ili različiti, predstavljaju linearnu ili račvastu $C_1$-$C_4$ alkilen grupu $R_{30}$ i $R_{31}$, zajedno, predstavljaju karbonil grupu sa ugljenikom za koji su vezani, ili predstavljaju grupu opšte formule:
— O—$R_{29}$—O— (m) u kojoj $R_{29}$ predstavlja $C_1$-$C_4$ alkilen grupu, T je vodonik ili $C_1$-$C_4$ alkil, R predstavlja: - cijano, formil ili tetrazolil grupu, - estar opšte formule (a) gde $R_4$ predstavlja linearnu ili račvastu $C_1$-$C_6$ alkil grupu ili $C_3$-$C_6$ cikloalkil grupu, - karboksilnu grupu opšte formule (b) gde $R_5$ predstavlja vodonik ili atom alkalnog metala, - amidnu grupu opšte formule (c) gde $R_6$ i $R_7$, isti ili različiti predstavljaju vodonik ili linearan ili račvast, $C_1$-$C_4$ alkil radikal ili $R_6$ i $R_7$, zajedno, predstavljaju $C_2$-$C_6$ alkilen niz, - keto grupu opšte formule: (d)gde $R_8$ predstavlja $C_1$-$C_4$ alkil grupu, - oksim grupu opšte formule:
- CH = N – $OR_9$ (e) gde $R_9$ predstavlja vodonik ili $C_1$-$C_4$ alkil radikal, - karboksilnu grupu opšte formule: (f) gde $R_{10}$ predstavlja linearnu ili račvastu $C_1$-$C_4$ alkilen grupu, $R_{11}$ predstavlja vodonik ili $C_1$-$C_4$ alkil radikal, $R_{12}$ predstavlja $C_1$-$C_4$ alkil radikal ili $R_{11}$ i $R_{12}$ zajedno predstavljaju $C_2$-$C_6$ alkilen niz, - grupu opšte formule: (g) u kojoj $R_{32}$ i $R_{33}$, isti ili različiti, predstavljaju linearnu ili račvastu $C_1$-$C_4$ alkil grupu, $R_1$ predstavlja linearnu ili račvastu $C_1$-$C_6$ alkil grupu ili $R_1$ predstavlja grupu opšte formule:
—$R_{23}$—OH (j) u kojoj $R_{23}$ predstavlja linearnu ili račvastu $C_1$-$C_6$ alkilen grupu, $R_2$ i $R_3$, isti ili različiti, predstavljaju vodonik, linearnu ili račvastu $C_1$-$C_6$ alkil grupu, po izboru supstituisanu jednim, ili više, atoma halogena, ili pirolidinil grupom, $C_3$-$C_6$ cikloalkil grupom, ili grupom opšte formule -$R_{24}$-O-$R_{25}$ (k) u kojoj $R_{24}$ predstavlja linearnu ili račvastu $C_1$-$C_4$ alkilen grupu, i $R_{25}$ predstavlja linernu ili račvastu $C_1$-$C_4$ alkil grupu, ili $R_2$ i $R_3$, zajedno, predstavljaju linearnu ili račvastu $C_3$-$C_{10}$ alkilen grupu, ili sa atomom azota na koji su vezani predstavljaju grupu opšte formule: (l) u kojoj:
- $R_{26}$, $R_{27}$ i $R_{28}$, isti ili različiti, predstavljaju vodonik ili linearnu ili račvastu $C_1$-$C_4$ alkil grupu, ili - $R_{26}$ predstavlja vodonik ili linearnu ili račvastu $C_1$-$C_4$ alkil grupu, a $R_{27}$ i $R_{28}$, zajedno, predstavljaju linearnu ili račvastu $C_1$-$C_4$ alkilen grupu, W, W' i Z su odabrani tako da: - kada W i W' su isti, predstavljaju -CH, Z je -O- ili -S-, - kada W predstavlja CH i W' predstavlja C-$R_{13}$, Z je -CH=C-$R_{14}$, $R_{13}$ i $R_{14}$ su isti ili različiti i predstavljaju vodonik, atom halogena, $C_1$-$C_4$ alkil radikal ili $C_1$-$C_4$ alkoksi radikal; X predstavlja -O- ili -S-, ovi derivati benzofurana ili benzotiofena su u obliku individualnih optičkih izomera ili njihovih smeša.
Prijava sadrži još 32 patentna zahteva.

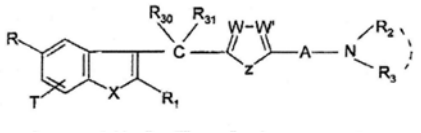

(1)

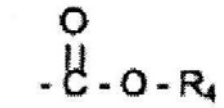
(a)

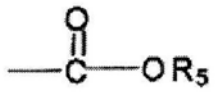
(b)

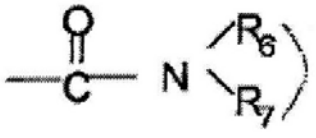
(c)

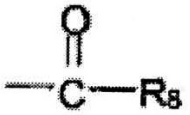
(d)

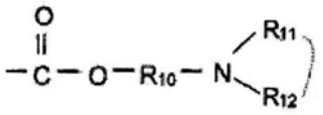
(f)

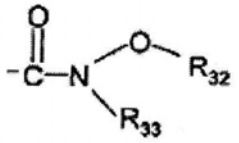
(g)

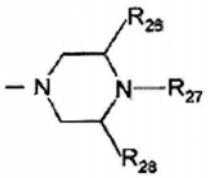
(l)

**(51)** ***C 07 D 307/87*** (2006.01) **(11) 51575**
**(13) B**
(21) P-2011/0057 (22) 22.06.2006.
(30) DK 22.06.2005. 200500912
(86) WO 22.06.2006. PCT/DK2006/000366
(87) WO 28.12.2006. WO 2006/136169
(96) 22.06.2006. 06742481.2
(97) 02.02.2011. EP1896439B 2011/05 EN
**(54) KRISTALNA BAZA ESCITALOPRAMA I ORODISPERZIBILNE TABLETE KOJE SADRŽE BAZU ESCITALOPRAMA**
CRYSTALLINE BASE OF ESCITALOPRAM AND ORODISPERSIBLE TABLETS COMPRISING ESCITALOPRAM BASE
(73) H. LUNDBECK A/S, Ottiliavej 9,
2500 Valby-Copenhagen, DK

(72) DANCER, Robert, Sönderkär 53, DK-2650 Hvidovre, DK; PETERSEN, Hans, Guldagervej 11, DK-2720 Vanlöse, DK; NIELSEN, Ole, Nystedvej 19, DK-2500 Valby, DK; ROCK, Michael, Harold, Risbjergvej 28, DK-2650 Hvidovre, DK; ELIASEN, Helle, Munkekärgård 9, DK-4600 Köge, DK; LILJEGREN, Ken, Langkär Vänge 10, DK-3500 Värlöse, DK
(74) ŽIVKO MIJATOVIĆ AND PARTNERS, Takovska 58, 11000 Beograd, RS
(57) Slobodna baza escitaloprama u čvrstoj formi, **naznačena time,** što sadrži kristalni escitalopram.
Prijava sadrži još 21 zavisni patentni zahtev.

---

**(51)** ***C 07 D 401/04*** (2006.01) **(11) 51622**
***C 07 D 405/14*** (2006.01) **(13) B**
***A 01 N 43/707*** (2006.01)
***C 07 D 401/14*** (2006.01)
***C 07 D 409/14*** (2006.01)
(21) P-2011/0050 (22) 11.04.2007.
(30) EP 12.04.2006. 06007743
(86) WO 11.04.2007. PCT/EP2007/053515
(87) WO 18.10.2007. WO 2007/116078
(96) 11.04.2007. 07727983.4
(97) 29.12.2010. EP2010514B 2010/52 DE
**(54) 3-(PIRIDIN-2-IL)-[1, 2, 4]-TRIAZINI KAO FUNGICIDI**
3-(PYRIDIN-2-YL)-[1, 2, 4]-TRIAZINE ALS FUNGIZIDE
(73) BASF SE, 67056 Ludwigshafen, DE
(72) GRAMMENOS, Wassilios, Alexander-Fleming-Str. 13, 67071 Ludwigshafen, DE; GROTE, Thomas, Im Höhnhausen 18, 67157 Wachenheim, DE; DIETZ, Jochen, Spelzenstr. 2a, 68167 Mannheim, DE; LOHMANN, Jan, Klaas, Gräfenaustrasse 20, 67063 Ludwigshafen, DE; RENNER, Jens, Lorbeerweg 2, 67098 Bad Dürkheim, DE; MÜLLER, Bernd, Stockinger Str. 7, 67227 Frankenthal, DE; ULMSCHNEIDER, Sarah, Lorbeerweg 2, 67098 Bad Dürkheim, DE
(74) ŽIVKO MIJATOVIĆ AND PARTNERS, Takovska 58, 11000 Beograd, RS
(57) 3-(piridin-2-il)-[l,2,4]-triazinska jedinjenja opšte formule I pri čemu: $R^1$, $R^2$ označavaju nezavisno jedan od drugog OH, halogen, $NO_2$, $NH_2$, $C_1$-$C_8$-alkil, $C_1$-$C_8$-alkoksi, $C_1$-$C_8$-halogenalkil, $C_1$-$C_8$-halogenalkoksi, $C_1$-$C_8$-alkilamino ili di($C_1$-$C_8$-alkil)amino, ili zajedno sa atomima ugljenika za koje su vezani mogu obrazovati zasićeni 5-, 6- ili 7-karbociklus ili heterociklus, koji pored ugljeničnih članova prstena ima i jedan ili dva heteroatoma izabrana iz grupe koja se sastoji od kiseonika i sumpora, pri čemu su karbociklus i heterociklus nesupstituisani ili imaju 1, 2, 3 ili 4 $C_1$-$C_4$-alkil grupe kao supstituente;
označava vodonik, $C_1$-$C_4$-alkil, $C_1$-$C_4$-alkoksi, $C_1$-$C_4$-halogenalkil, $C_1$-$C_4$-halogenalkoksi, $C_3$-$C_6$-cikloalkil, $C_3$-$C_6$-cikloalkilmetil ili halogen;
$R^4$ označava vodonik, $C_1$-$C_4$-alkil, $C_1$-$C_4$-alkoksi, $C_1$-$C_4$-halogenalkil, $C_1$-$C_4$-halogenalkoksi ili halogen;
$R^5$ označava $C_1$-$C_8$-alkil, $C_1$-$C_8$-halogenalkil, $C_1$-$C_8$-alkoksi, $C_1$-$C_8$-halogenalkoksi, $C_3$-$C_8$-cikloalkil, $C_3$-$C_8$-cikloalkiloksi, 5- ili 6-člani heteroaril, fenil, fenoksi, benzil, benziloksi, 5- ili 6-člani heteroarilmetil ili 5- ili 6-člani heteroariloksi, pri čemu su napred navedeni ciklični radikali nesupstituisani ili mogu imati 1, 2, 3, 4 ili 5 radikala $R^a$, pri čemu je $R^a$ izabrano između OH, SH, halogena, $NO_2$, $NH_2$, CN, COOH, $C_1$-$C_8$-alkil, $C_1$-$C_8$-alkoksi, $C_1$-$C_8$-halogenalkila, $C_1$-$C_8$-halogenalkoksi, $C_1$-$C_8$-alkilamino, di($C_1$-$C_8$-alkil)amino, $C_1$-$C_8$-alkiltio, $C_1$-$C_8$-halogenalkiltio, $C_1$-$C_8$-alkilsulfmila, $C_1$-$C_8$-halogenalkilsulfmila, $C_1$-$C_8$-alkilsulfonila, $C_1$-$C_8$-halogenalkilsulfonila, $C_3$-$C_8$-cikloalkila, fenila, fenoksi i radikala formule $C(=Z)R^{aa}$, pri čemu Z označava O, S, N($C_1$-$C_8$-alkil), N($C_1$-$C_8$-alkoksi), N($C_3$-$C_8$-alkeniloksi) ili N($C_3$-$C_8$-alkiniloksi) i $R^{aa}$ označava vodonik, $C_1$-$C_8$-alkil, $C_1$-$C_8$-alkoksi $NH_2$, $C_1$-$C_8$-alkilamino ili di($C_1$-$C_8$-alkil)amino, ili dva radikala $R^a$ vezana za susedne atome ugljenika koji zajedno sa atomima ugljenika za koje su vezani takođe mogu obrazovati zasićeni 5-, 6- ili 7-člani karbociklus, benzolov prsten ili 5-, 6- ili 7-člani heterociklus, koji pored ugljeničnih članova prstena ima jedan ili dva heteroatoma izabrana iz grupe koja se sastoji od kiseonika i sumpora kao članova prstena, pri čemu su karbociklus i heterociklus nesupstituisani ili imaju 1, 2, 3 ili 4 $C_1$-$C_4$-alkil grupe kao supstituente; i poljoprivredno primenljive soli jedinjenja formule I, izuzev:
2,6-bis-(5,6-dimetil-l,2,4-triazin-3-il)piridin;
2,6-bis-(5,6-dietil-l,2,4-triazin-3-il)piridin;
2,6-bis-(5,6-dipropil-l,2,4-triazin-3-il)piridin;
2,6-bis-(5,6-diizopropil-l,2,4-triazin-3-il)piridin;
2,6-bis-(5,6-dibutil-l,2,4-triazin-3-il)piridin;
2,6-bis-(5,6-diizobutil-l,2,4-triazin-3-il)piridin;
2,6-bis-(5,6-dipentil-l,2,4-triazin-3-il)piridin;
2,6-bis-(5,6-diheksil-l,2,4-triazin-3-il)piridin;
2,6-bis-(5,6-diheptil-1,2,4-triazin-3-il)piridin;
3 - [6-(2,2' -bipiridil)] -5,6-dimetil-1,2,4-triazin;
3-[6-(2,2'-bipiridil)]-5,6-dietil-l,2,4-triazin;
3-[6-(2,2'-bipiridil)]-5,6-dipropil-l,2,4-triazin;
3 - [6-(2,2' -bipiridil)] -5,6-dibutil-1,2,4-triazin;
5,6-dietil-3 - [6-(2-piridil)-4-metoksipiridin-2-il] -1,2,4-triazin;
3-(6-metilpiridin-2-il)-5,6-dimetil-l,2,4-triazin;
3-(6-metilpiridin-2-il)-5,6-dietil-l,2,4-triazin;
2,6-bis-(5,6-dimetoksi-l,2,4-triazin-3-il)piridin; i
2,6-bis-(5,6-dietoksi-l,2,4-triazin-3-il)piridin.
Prijava sadrži još 14 zavisnih patentnih zahteva.

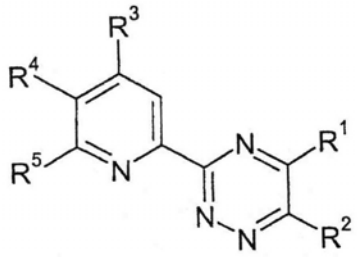

(I)

**(51)** ***C 07 D 401/14*** (2006.01) **(11) 51601**
***A 61 K 31/4439*** (2006.01) **(13) B**
***C 07 D 401/04*** (2006.01)
***A 61 P 35/00*** (2006.01)
(21) P-2011/0085 (22) 15.08.2005.
(30) US 26.08.2004. 605244P
US 14.06.2005. 690803P
(86) WO 15.08.2005. PCT/IB2005/002695
(87) WO 02.03.2006. WO 2006/021881
(96) 15.08.2005. 05782821.2
(97) 22.12.2010. EP1784396B 2010/51 EN

**(54) PIRAZOLI SUPSTITUISANI SA AMINOHETEROARIL JEDINJENJA, KAO INHIBITORI PROTEIN KINAZE**
PYRAZOLE-SUBSTITUTED AMINOHETEROARYL COMPOUNDS AS PROTEIN KINASE INHIBITORS

(73) PFIZER, INC., 235 East 42nd Street, New York, NY 10017, US

(72) CUI, Jingrong, Jean, Pfizer Global R&D, Agouron/Pfizer La Jolla, 10770, Science Ctr Drive, San Diego, CA 92121, US; FUNK, Lee, Andrew, Pfizer Global R&D, Agouron/Pfizer La Jolla, 10770, Science Ctr Drive, San Diego, CA 92121, US; JIA, Lei, Pfizer Global R&D, Agouron/Pfizer La Jolla, 10770, Science Ctr Drive, San Diego, CA 92121, US; KUNG, Pei-Pei, Pfizer Global R&D, Agouron/Pfizer La Jolla, 10770, Science Ctr Drive, San Diego, CA 92121, US; MENG, Jerry, Jialun, Pfizer Global R&D, Agouron/Pfizer La Jolla, 10770, Science Ctr Drive, San Diego, CA 92121, US; NAMBU, Mitchell, David, Pfizer Global R&D, Agouron/Pfizer La Jolla, 10770, Science Ctr Drive, San Diego, CA 92121, US; PAIRISH, Mason, Alan, Pfizer Global R&D, Agouron/Pfizer La Jolla, 10770, Science Ctr Drive, San Diego, CA 92121, US; SHEN, Hong, Pfizer Global R&D, Agouron/Pfizer La Jolla, 10770, Science Ctr Drive, San Diego, CA 92121, US; TRAN-DUBE, Michelle, Bich, Pfizer Global R&D, Agouron/Pfizer La Jolla, 10770, Science Ctr Drive, San Diego, CA 92121, US

(74) POPOVIĆ, Srđa i ost., Takovska 19, 11000 Beograd, RS

(57) Jedinjenje formule 1 gde su: Y je $CR^{12}$;
A je fenil, supstituisan sa jednom, dve ili tri $R^3$ grupe;
$R^1$ se bira između opciono supstituisanim sa jednom, dve ili tri $R^{13}$ grupe; $R^2$ je vodonik;
$R^3$ svaki nezavisno, je halogen, $C_{1-12}$ alkil, $C_{2-12}$ alkenil, $C_{2-12}$ alkinil, $C_{3-12}$ cikloalkil, $C_{6-12}$ aril, 3-12-člani heterocikloaliciklil, 5-12-člani heteroaril, $-S(O)_mR^4$, $-SO_2NR^4R^5$, $-S(O)_2OR^4$, -NO2, $-NR^4R^5$, -CN, $-C(O)R^4$, $-OC(O)R^4$, $-O(CR^6R^7)_nR^4$, $-O(CR^6R^7)(CR^6R^7)_nNR^4R^5$, $-O(CR^6R^7)(CR^6R^7)_nOR^4$, $-NR^4C(O)R^5$, $-(CR^6R^7)_nC(O)OR^4$, $-(CR^6R^7)_nOR^4$, $-(CR^6R^7)_nC(O)NR^4R^5$, $-C(=NR^6)NR^4R^5$, $-NR^4C(O)NR^5R^6$, ili $-NR^4S(O)_pR^5$;
$R^4$, $R^5$, $R^6$ i $R^7$ svaki nezavisno, je vodonik, halogen, $C_{1-12}$ alkil, $C_{2-12}$ alkenil, $C_{2-12}$ alkinil, $C_{3-12}$ cikloalkil, $C_{6-12}$ aril, 3-12-člani heterocikloaliciklil, 5-12-člani heteroaril;
$R^9$ je metil, a $R^{10}$ je vodonik; $R^{12}$ je vodonik;
$R^{13}$ svaki nezavisno, je halogen, $C_{1-12}$ alkil, $C_{2-12}$ alkenil, $C_{2-12}$ alkinil, $-S(O)_mR^4$, $-SO_2NR^4R^5$, $-S(O)_2OR^4$, $-NO_2$, $-NR^4R^5$, -CN, $-OC(O)R^4$, $-O(CR^6R^7)_nR^4$, $-NR^4C(O)R^5$, $-(CR^6R^7)_nC(O)OR^4$, $-(CR^6R^7)_nOR^4$, $-C(=NR^6)NR^4R^5$, $-NR^4C(O)NR^5R^6$, $-NR^4S(O)_pR^5$, $-(CR^6R^7)_n$(3-12-člani heterocikloaliciklil), $-(CR^6R^7)_n(C_{3-12}$ cikloalkil), $-(CR^6R^7)_n(C_{6-12}$ aril), $-(CR^6R^7)$n(5-12-člani heteroaril), $-(CR^6R^7)_nC(O)NR^4R^5$, ili $-(CR^6R^7)_nC(O)R^4$, ili $R^{13}$ grupe na susednim atomima mogu da se kombinuju, formirajući neku $C_{6-12}$ aril, 5-12-članu heteroaril, $C_{3-12}$ cikloalkil ili 3-12-članu heterocikloaliciklil grupu, a svaki vodonik u $R^{13}$ je opciono supstituisan sa $R^3$;
m svaki nezavisno, je 0, 1 ili 2;
n svaki nezavisno, je 0, 1, 2, 3 ili 4;
t je jednako 1, i
p svaki nezavisno, je 1 ili 2;
ili neka njegova farmaceutski prihvatljiva so, hidrat ili solvat, pod uslovom da to jedinjenje ne predstavljaju:
3-1 -(2,6-dihloro-3-fluoro-fenil)-etoksi]-5-[1 -(2-pirolidin -1 -il-etil)-1 H-pirazol-4-il]-piridin-2-ilamin, 3-[1 -(2,6-dihloro-3-fluoro-fenil)-etoksi]-5-[1 -(2-diizopropilamino-etil) -1 H-pirazol-4-il]-piridin-2-ilamin, 3-[1 -(2,6-dihloro-3-fluoro-fenil)-etoksi]-5-[1 -(2-morfolin-4-il-etil)-1 H pirazol-4-il]-piridin-2-ilamin ili 3-[1-(2,6-dihloro-3-fluorofenil)-etoksil-5-(1-metil-1H-pirazol 4-il)-piridin-2-ilamin.
Prijava sadrži još 9 zavisnih patentnih zahteva.

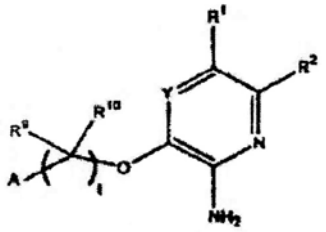

1

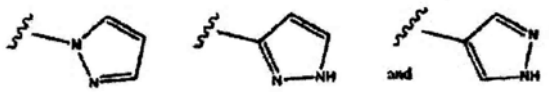

---

**(51)** ***C 07 D 403/12*** (2006.01) **(11) 51616**
***C 07 D 417/12*** (2006.01) **(13) B**
***A 61 K 31/5355*** (2006.01)
***A 61 P 35/00*** (2006.01)
***C 07 D 413/12*** (2006.01)
***A 61 K 31/497*** (2006.01)
***A 61 K 31/541*** (2006.01)
(21) P-2011/0053 (22) 29.03.2006.
(30) US 29.03.2005. 666026P
(86) WO 29.03.2006. PCT/US2006/011584
(87) WO 05.10.2006. WO 2006/105262
(96) 29.03.2006. 06748900.5
(97) 01.12.2010. EP1869020B 2010/48 EN

**(54) DERIVATI HETEROARIL UREE KORISNI ZA INHIBICIJU CHK1**
HETEROARYL UREA DERIVATIVES USEFUL FOR INHIBITING GHK1

(73) ICOS CORPORATION, 22021 20th Avenue S.E., Bothell, WA 98201, US
(72) DIAZ, Frank, 1366 54th Avenue NE, Saint Petersburg, FL 33703, US; FAROUZ, Francine, S., 4222 93rd Avenue, S.E., Mercer Island, Washington 98040, US; HOLCOMB, Ryan, 1214 2nd Avenue, Kirkland, Washington 98033, US; KESICKI, Edward, A., 2504 208th Place SE, Bothell, Washington 980211, US; OOI, Hua, Chee, 11905 93rd Avenue N.E., Apt. A104, Kirkland, Washington 98034, US; RUDOLPH, Alexander, 17002 NE 80th St., Redmond, Washington 98052, US; STAPPENBECK, Frank, 321 31st Avenue, Seattle, Washington 98122, US; THORSETT, Eugene, 410 2nd Avenue S., 304, Kirkland, Washington 98033, US; GAUDINO, John, Joseph, 4224 Prairie Fire Circle, Longmont, Colorado 80503, US; FISHER, Kimba, L., 1275 Cumberland Drive, Longmont, Colorado 80501, US; COOK, Adam, Wade, 5983 Star View Drive, Broomfield, Colorado 80020, US
(74) POPOVIĆ, Srđa i ost., Takovska 19, 11000 Beograd, RS
(57) Jedinjenje, **naznačeno time**, stoje 1-[5-bromo-4-metil-2-S-(morfolin-2-ilmetoksi)-fenil]-3-(5-metil- pirazin-2-il) -urea ili njegova farmaceutski prihvatljiva so.
Prijava sadrži još 4 zavisna patentna zahteva.

---

**(51)** ***C 07 D 409/14*** (2006.01) **(11) 51572**
***C 07 D 487/04*** (2006.01) **(13) B**
***C 07 D 417/14*** (2006.01)
***A 61 K 31/55*** (2006.01)
***A 61 P 35/00*** (2006.01)
***C 07 D 409/12*** (2006.01)
***C 07 D 413/04*** (2006.01)
***C 07 D 471/04*** (2006.01)
***A 61 P 29/00*** (2006.01)
***A 61 P 9/00*** (2006.01)
(21) P-2011/0015 (22) 28.06.2006.
(43)
(30) EP 30.06.2005. 05014270
(86) WO 28.06.2006. PCT/EP2006/063611
(87) WO 11.01.2007. WO 2007/003536
(96) 28.06.2006. 06763910.4
(97) 24.11.2010. EP1899330B 2010/47 DE
**(54) SUPSTITUISANI GLICINAMIDI KOJI IMAJU ANTITROMBOCITNO I FAKTOR XA-INHIBITORNO DEJSTVO**
SUBSTITUTED GLYCINAMIDES HAVING AN ANTITHROMBOTIC AND FACTOR XA-INHIBITING EFFECT
(73) BOEHRINGER INGELHEIM INTERNATIONAL GMBH, Binger Strasse 173, 55216 Ingelheim am Rhein, DE
(72) WIENEN, Wolfgang, Kirschenweg 27, 88400 Biberach, DE; PFAU, Roland, Pfluggasse 15, 88400 Biberach, DE; GERLACH, Kai, Mondstrasse 18/1, 88400 Biberach, DE; DAHMANN, Georg, Bahnhofstrasse 14, 88448 Attenweiler, DE; PRIEPKE, Henning, Birkenharderstr. 11, 88447 Warthausen, DE; NAR, Herbert, Hexenweg 19, 88416 Ochsenhausen, DE; HANDSCHUH, Sandra, Beim Fohrhaeldele 16, 88400 Biberach, DE; SCHULER-METZ, Annette, Holzgasse 7, 89081 Ulm, DE
(74) PLAVŠA, Drago i ost., Strumička 51, 11050 Beograd, RS
(57) Jedinjenja opšte formule (I) pri čemu D označava supstituisani biciklični sistemski prsten formule (II), gde $K^1$ i $K^4$ svaki nezavisan jedan od drugog označava $-CH_2-$, $-CHR^{7a}-$, $-CR^{7b}R^{7c}-$ ili -C(O)- grupu, I $R^{7a}/R^{7b}/R^{7c}$ svaki nezavisan jedan od drugog označava atom fluora, hidroksi, $C_{1-5}$-alkiloksi, tetrahidrofuranil, oksetanil, amino, $C_{1-5}$-alkilamino, di-($C_{1-5}$-alkil)-amino, $C_{3-5}$-cikloalkilenimino ili $C_{1-5}$-alkilkarbonilamino grupu, $C_{1-5}$-alkil grupu koja može biti supstituisana sa 1-3 atoma fluora, hidroksi-$C_{1-5}$-alkil, $C_{1-5}$-alkiloksi-$C_{1-5}$-alkil, amino-$C_{1-5}$-alkil, $C_{1-5}$-alkilamino-$C_{1-5}$-aIkil, di-($C_{1-5}$-alkil)-amino-$C_{1-5}$-alkil, $C_{4-7}$-cikloalkilenimino-$C_{1-5}$-alkil, karboksi-$C_{0-5}$-alkil, $C_{1-5}$-alkiloksikarbonil-$C_{0-5}$-alkil, aminokarbonil-$C_{0-5}$-alkil, $C_{1-5}$-alkilaminokarbonil-$C_{0-5}$-alkil, di-($C_{1-5}$-alkil)-aminokarbonil-$C_{0-5}$-alkil, $C_{4-7}$-cikloalkilenimino-karbonil-$C_{0-5}$-alkil- grupom, fenil grupom ili 5- ili 6-članom heteroaril grupom koja može biti supstituisana sa 1-2 supstituenta odabrana od nitro, amino, hidroksi, metoksi, cijano, d-s-alkil grupe ili atoma fluora, hlora ili broma, pri čemu dve grupe R7b/R7c ne mogu istovremeno biti vezane za cilkični atom ugljenika preko hateroatoma, osim ako -C(R7bR7c)- odgovara -CF2- grupi, ili dve grupe R7b/R7c zajedno sa cikličnim atomom ugljenika mogu obrazovati 3, 4, 5-, 6- ili 7-članu zasićenu karbocikličnu grupu ili ciklopenten, cikloheksen, oksetan, azetidin, tietan, tetrahidrofuran, pirolidin, tetrahidrotiofen, tetrahidropiran, piperidin, pentametilen sulfid, heksametilenimin, 1,3-dioksolan, 1,4-dioksan, heksahidropiridazin, piperazin, tiomorfolin, morfolin, 2-imidazolidinon, 2-oksazolidinon, tetrahidro-2(1H)-pirimidinon, [1,3]oksazinan-2-on prsten, pri čemu njihove metilen grupe mogu biti supstituisane sa 1-2 $C_{1-3}$-alkil ili $CF_3$ grupom, i/ili njihove metilen grupe, ukoliko nisu vezane za heteroatom, mogu biti supstituisane sa 1-2 atoma fluora, i/ili gde $-CH_2$ grupa koja je u susedstvu atoma N može biti zamenjena sa -CO grupom, i/ili imino grupe koje mogu biti supstituisane u svakom slučaju sa $_{C1-3}$-alkil ili $C_{1-3}$-alkilkarbonil grupom, i/ili gde atom sumpora može biti oksidisan kako bi obrazovao sulfoksidnu ili sulfon grupu, $K^2$ i $K^3$ svaki nezavisno jedan od drugoga označava $-CH_2-$, $-CHR^{8a}-$, $-CR^{8b}R^{8c}-$ ili C(O)- grupu, I $R^{8a}/R^{8b}/R8^c$ svaki nezavisan jedan od drugoga označava $C_{1-5}$-alkil grupu koja može biti supstituisana sa 1-3 atoma fluora, hidroksi-$C_{1-5}$-alkil, $C_{1-5}$-alkiloksi-$C_{1-5}$-alkil, amino-$C_{1-5}$-alkil, $C_{1-5}$-alkilamino-$C_{1-5}$-alkil, di-($C_{1-5}$-alkil)-amino-$C_{1-5}$-alkil, $C_{4-7}$-cikloalkilenimino-$C_{1-5}$-alkil, karboksi-$C_{0-5}$-alkil, $C_{1-5}$-alkiloksikarbonil-$C_{0-5}$-alkil, aminokarbonil-$C_{0-5}$-alkil, $C_{1-5}$-alkilaminokarbonil-$C_{0-5}$-alkil, di-($C_{1-5}$-alkil)-aminokarbonil-$C_{0-5}$-alkil, $C_{4-7}$-cikloalkilen-iminokarbonil-$C_{0-5}$-alkil grupom, ili dve grupe $R^{3b}/R^{3c}$ zajedno sa cikličnim atomom ugljenika mogu obrazovati 3, 4, 5-, 6- ili 7-članu zasićenu karbocikličnu grupu ili ciklopenten, cikloheksen, oksetan, azetidin, tietan, tetrahidrofuran, pirolidin, tetrahidrotiofen, tetrahidropiran, piperidin, pentametilen sulfid, heksametilenimin, heksahidropiridazin, tetrahidro-

2(1H)-pirimidinon, [1,3]oksazinan-2-on prsten, gde njihove metilen grupe mogu biti supstituisane sa 1-2 $C_{1-3}$-alkil ili $CF_3$ grupama, i/ili njihove metilen grupe, ukoliko nisu vezane za heteroatom, mogu biti supstituisane sa 1-2 atoma fluora, i/ili gde -$CH_2$ grupa pored atoma azota mogu biti zamenjeni sa -CO grupom, i/ili imino grupe koje mogu biti supstituisane u svakom slučaju sa $C_{1-3}$-alkil ili $C_{1-3}$-alkilkarbonil grupom, i/ili gde atom sumpora može biti oksidisan kako bi obrazovao sulfoksid ili sulfon grupu, uz uslov da heteroatom uvršten sa $R^{8b}$ ili $R^{8c}$ ne mora da bude odvojen od X u formuli (I) samo sa jednim atomom ugljenika, i prema tome ne bi trebalo da bude više od četiri grupe odabrane od $R^{7a}$, $R^{7b}$, $R^{7c}$, $R^{8a}$, $R^{8b}$ i $R^{8c}$ u formuli (II), I X označava atom kiseonika ili sumpora, sulfen, sulfon ili $NR^1$ grupu, gde R1 označava atom vodonika ili hidroksi, $C_{1-3}$-alkiloksi, amino, $C_{1-3}$-alkilamino, di-($C_{1-3}$-alkil)-amino, $C_{1-5}$-alkil, $C_{2-5}$-alkenil-$CH_2$, $C_{2-5}$-alkinil-$CH_2$, $C_{3-6}$-cikloalkil, $C_{4-6}$-cikloalkenil, oksetan-3-il, tetrahidrofuran-3-il, benzil, $C_{1-5}$-alkil-karbonil, trifluorometilkarbonil, $C_{3-6}$-cikloalkil-karbonil, $C_{1-5}$-alkil-sulfonil, $C_{3-6}$-cikloalkil-sulfonil, aminokarbonil, $C_{1-5}$-alkilaminokarbonil, di-($C_{1-5}$-alkil)-aminokarbonil, $C_{1-5}$-alkiloksikarbonil, $C_{4-7}$-cikloalkilen-iminokarbonil grupu, gde metilen i metil grupe koje su prisutne u gore navedenim grupama, mogu dodatno da budu supstituisane sa $C_{1-3}$-alkil, karboksi, $C_{1-5}$-alkoksikarbonil grupom ili sa hidroksi, $C_{1-5}$-alkiloksi, amino, $C_{1-5}$ alkilamino, $C_{1-5}$- dialkilamino ili $C_{4-7}$-cikloalkilenimino grupom, obezbeđujući da metilen ili metil grupe nisu direktno vezane za heteroatom odabran između O, N ili S, i/ili jedan do tri atoma vodonika mogu biti zamenjeni sa atomima fluora, obezbeđujući da metilen ili metil grupe nisu direktno vezane za heteroatom odabran između O, N ili S, i gde $A^1$ označava ili N ili $CR^{10}$, $A^2$ označava ili N ili $CR^{11}$, $A^3$ označava ili N ili $CR^{12}$, gde $R^{10}$, $R^{11}$ i $R^{12}$ svaki nezavisan jedan od drugoga predstavlja atom vodonika, fluora, hlora, broma ili joda, ili $C_{1-5}$-alkil, $CF_3$, $C_{2-5}$-alkenil, $C_{2-}$5-alkinil, cijano, karboksi, $C_{1-5}$-alkiloksikarbonil, hidroksi, $C_{1-3}$-alkiloksi, $CF_3O$, $CHF_2O$, $CH_2FO$, amino, $C_{1-5}$-alkilamino, di-($C_{1-5}$-alkil)-amino ili $C_{4-7}$-cikloalkilenimino grupu, ili D označava jednu od četiri grupe (11-1), (II-2), (II-3) ili (II-4) gde su grupe $A^1$, $A^2$, $A^3$, $K^1$, $K^2$, $K^3$, $K^4$ kao što je ovde definisano, a Anjon u (II-4) označava fluorid, hlorid, bromid, jodid, sulfat, vodonik sulfat, fosfat, vodonik fosfat, benzoat, salicilat, sukcinat, citrat ili tartrat, $R^3$ označava atom vodonika ili $C_{1-3}$-alkil grupu, I $R^4$ i $R^5$ svaki nezavisan jedan od drugog predstavlja atom vodonika, prav lanac ili razgranatu $C_{1-6}$-alkil, $C_{2-6}$-alkenil ili $C_{2-6}$-alkinil grupu, gde atomi vodonika metilen i/ili metil fragmenata pravog lanca ili razgranate $C_{1-6}$-alkil, $C_{2-6}$-alkenil ili $C_{2-6}$-alkinil grupe mogu opciono u celosti ili delimično biti zamenjene sa atomima fluora, i/ili jedan ili dva atoma vodonika pravog lanca ili razgranate $C_{1-6}$-alkil, $C_{2-6}$-alkenil ili $C_{2-6}$-alkinil grupe u njihovim metilen i/ili metil fragmentima mogu opciono svaki biti zamenjen nezavisno jedna od druge sa $C_{3-7}$-cikloalkil grupom, nitril, hidroksi ili $C_{1-5}$-alkiloksi grupom, gde atomi vodonika $C_{1-5}$-alkiloksi grupe mogu opciono biti u celosti ili delimično biti zamenjeni sa atomima fluora, aliloksi, propargiloksi, fenilmetiloksi, fenetiloksi, $C_{1-5}$-alkilkarbontloksi, $C_{1-5}$-alkiloksikarboniloksi, karboksi-$C_{1-5}$-alkiloksi, $C_{1-5}$-alkiloksikarbonil-$C_{1-5}$-alkiloksi, $C_{1-5}$-alkiloksi-d-salkiloksi, merkapto, $C_{1-5}$-alkilsulfanil, $C_{1-5}$-alkilsulfinil, $C_{1-5}$-alkilsulfonil, karboksi, $C_{1-5}$-alkiloksikarbonil, aminokarbonil, $C_{1-5}$-alkilaminokarbonil, di-($C_{1-5}$-alkil)-aminokarbonil, $C_{1-5}$-alkil-amino-karboniloksi, di-($C_{1-5}$-alkil)-aminokarboniloksi, $C_{4-7}$-cikloalkilen-iminokarbonil, aminosulfonil, $C_{1-5}$-alkilaminosulfonil, di-($C_{1-5}$-alkil)-aminosulfonil, $C_{4-7}$-cikloalkileniminosulfonil, di-($C_{1-5}$-alkil)-fosforil, amino, $C_{1-5}$-alkilamino, di-($C_{1-5}$-alkil)-amino, $C_{1-5}$-alkilkarbonilamino, trifluoracetilamino, $C_{1-5}$-alkiloksi-$C_{1-5}$-alkilkarbonilamino, fenilkarbonilamino, $C_{1-5}$-alkilaminokarbonilamino, di-($C_{1-5}$-alkil)-aminokarbonilamino, $C_{1-5}$-alkiloksi-karbonilamino, fenilmetiloksi-karbonilamino, $C_{1-5}$-alkiloksi-$C_{2-5}$-alkiloksi-$C_{1-2}$-alkilkarbonilamino, $C_{1-5}$-alkil-sulfonilamino, N-($C_{1-5}$-alkilsulfonil)-$C_{1-5}$-alkilamino, $C_{3-6}$-cikloalkilkarbonilamino grupom, 4-morfolino-karbonilamino, ili morfolinil, tiomorfolinil, pirolidinil, piperidinil, piperazinil, tetrahidrofuranil, tetrahidropiranil grupom, gde gore navedeni karbo- i heterocikli u prstenu mogu svaki biti supstituisani sa 1 do 4 d-3-alkil ili $C_{1-3}$-alkilkarbonil grupe ili mogu svaki biti supstituisani sa 1 ili 2 okso grupe, i/ili gore navedene fenil i heteroaril grupe mogu biti zamenjene sa 1 ili 2 supstituenta odabrana između fluora, hlora, broma, metil, metoksi, amino ili trifluorometil ili dva susedna atoma ugljenika fenil prstena mogu biti supstituisani sa -$CH_2$-O-$CH_2$ grupom, i/ili gore navedene alkil grupe mogu biti supstituisane sa cijano-$C_{1-5}$-alkiloksikarbonil ili karboksi grupom, gde gore navedeni amid karboksilne kiseline ili sumporne kiseline može biti opciono dodatno supstituisan na azotu sa $C_{1-5}$-alkil grupom, i/ili atomi vodonika $sp^2$-hibridizovanih atoma ugljenika pravog lanca ili razgranate $C_{2-6}$-alkenil grupe mogu opciono biti u potpunosti ili delimično zamenjeni sa atomima fluora, karboksi, aminokarbonil, $C_{1-5}$-alkilaminokarbonil, $C_{3-6}$-cikloalkilaminokarbonil, di-($C_{1-5}$-alkil)-aminokarbonil, $C_{1-5}$-alkiloksikarbonil, $C_{4-7}$-dkloalkileniminokarbonil grupom, fenil, mono- ili bicikličnom heteroaril, fenil-$C_{1-5}$-alkil ili mono- ili bicikličnom heteroaril-$C_{1-5}$-alkil grupom, koja može opciono biti mono- do trisupstituisana u fenil ili heteroaril ostatku sa identičnim ili različitim supstituentima koji su odabrani između atoma fluora, hlora, broma i joda, i $C_{1-5}$-alkil, trifluorometil, benzil, amino, nitro, $C_{1-5}$-alkil-amino, di-($C_{1-5}$-alkil)-amino, hidroksi, $C_{1-5}$-alkiloksi, mono-, di- ili trifluorometoksi, karboksi i $C_{1-5}$-alkiloksikarbonil grupe, ili dva susedna atoma ugljenika fenil prstena mogu biti supstituisani sa -$CH_2$-$OCH_2$- grupom, ili $C_{3-7}$cikloalkil, morfolinil, tiomorfolinil, pirolidinil, piperidinil, piperazinil, tetrahidrofuranil, tetrahidropiranil grupom, koja može opciono biti supstituisana sa jednom ili dve grupe odabrane nezavisno jedna od druge iz C1-3- alkil, acetil, $C_{1-5}$-alkiloksikarbonil, i hidroksikarbonil, ili $R^4$ i

$R^5$ zajedno sa atomom ugljenika za koji su vezane, obrazuju $C_{3-7}$-cikloalkil ili $C_{5-7}$-cikloalkenil grupu, gde jedna od metilen grupa $C_{4-7}$-cikloalkil grupe može biti zamenjena sa atomom kiseonika ili sumpora ili -NH-, -N($C_{1-5}$-alkil)-, -N($C_{1-4}$-alkilkarbonil)-, -N($C_{1-4}$-alkil-oksikarbonil)- ili karbonil, sulfinil ili sulfonil grupom, i/ili dve direktno susedne metilen grupe $C_{4-7}$-cikloalkil grupe mogu zajedno biti zamenjene sa -C(O)NH-, -C(O)N($C_{1-5}$-alkil)-, -S(O)$_2$NH-, ili -S(O)$_2$N($C_{1-5}$-alkil)-grupom, i/ili 1 do 3 atoma ugljenika $C_{3-7}$-cikloalkil grupe može svaki opciono biti supstituisan nezavisan jedan od drugog sa jednim ili dva atoma fluora ili jednom ili dve $C_{1-5}$-alkil grupe ili hidroksi, $C_{1-5}$-alkiloksi, formiloksi, $C_{1-5}$-alkilkarboniloksi, $C_{1-5}$-alkilsulfanil, $C_{1-5}$-alkilsulfonil, aminosulfonil, $C_{1-5}$-alkilaminosulfonil, di-($C_{1-5}$-alkil)-aminosulfonil, $C_{4-7}$-cikloalkilen-iminosulfonil, amino, $C_{1-5}$-alkilamino, di-($C_{1-5}$-alkil)-amino, $C_{1-5}$-alkil-karbonilamino, $C_{1-5}$-alkil-sulfonilamino, N($C_{1-5}$-alkilsulfonil)-$C_{1-5}$-alkilamino, $C_{3-6}$-cikloalkilkarbonilamino, Nitril, karboksi- $C_{1-5}$-alkil, $C_{1-5}$-alkiloksikarbonil- $C_{1-5}$-alkil, karboksi, $C_{1-5}$-alkiloksikarbonil, aminokarbonil, $C_{1-5}$-alkilaminokarbonil, di-( $C_{1-5}$-alkil)-aminokarbonil ili $C_{4-7}$-cikloalkilen-iminokarbonil grupom, i/ili 1 do 2 atoma ugljenika $C_{5-7}$-cikloalkenil grupe mogu opciono biti supstituisan nezavisno jedan od drugog u svakom slučaju sa $C_{1-5}$-alkil, nitril, karboksi- $C_{1-5}$-alkil, $C_{1-5}$-alkiloksikarbonil- $C_{1-5}$-alkil, karboksi, $C_{1-5}$-alkiloksikarbonil, aminokarbonil, $C_{1-5}$-alkilaminokarbonil, di-($C_{1-5}$-alkil)-aminokarbonil, $C_{3-6}$-cikloalkileniminokarbonil, aminosulfonil, $C_{1-5}$-alkilamino-sulfonil, di-($C_{1-5}$-alkil)-aminosulfonil, $C_{3-6}$-cikloalkileniminosulfonil grupama ili 1-2 atomom fluora, i/ili 1 do 2 atoma ugljenika $C_{4-7}$-cikloalkenil grupe koje nisu vezane za drugi atom ugljenika dvosturkom vezom, mogu opciono biti supstituisane nezavisno jedna od druge sa hidroksi, $C_{1-5}$-alkiloksi, $C_{1-5}$-alkilkarboniloksi, $C_{1-5}$-alkilsulfanil, $C_{1-5}$-alkilsulfonil, amino, $C_{1-5}$-alkilamino, di-( $C_{1-5}$-alkil)-amino, $C_{1-5}$-alkilkarbonilamino, $C_{1-5}$-alkil-sulfonilamino, N-( $C_{1-5}$-alkilsulfonil)- $C_{1-5}$-alkilamino ili $C_{3-6}$-cikloalkilkarbonilamino grupama, uz uslov da $C_{3-7}$-cikloalkil ili $C_{5-7}$-cikloalkenil grupa ove vrste formirana iz $R^4$ i $R^5$ zajedno, gde su dva hetero atoma u cikličnoj grupi odabrana od kiseonika i azota odvojena jedan od drugog sa preciznom jednom opcionom supstituisanom -$CH_2$- grupom, i/ili gde jedna ili obe metilen grupe ciklične grupe koje su spojene direktno na atomu ugljenika za koji su grupe $R^4$ i $R^5$ vezane, su zamenjene heteroatomom odabranim od kiseonika, azota i sumpora, i/ili gde gde je supstituent vezan za cikličnu grupu, koja je naznačena time što je heteroatom koji je odabran od kiseonika, azota, sumpora i fluora direktno vezan za cikličnu grupu, odvojen od jednog drugog heteroatoma koji je odabran od kiseonika, azota i sumpora, uz izuzetak sulfonske grupe, sa tačno jednom, opciono supstituisanom, metilen grupom, i/ili gde dva atoma u prstenu obrazuju -O-O- ili -S-O-vezu, je isključen, M označava tiofen prsten prema formuli (III), koji je vezan za karbonil grupu u formuli (I) preko 2-položaja i koji je supstituisan u 5-položaju sa $R^2$ i opciono dodatno sa $R^6$, gde $R^2$ označava atom vodonika, fluora, hlora, broma ili joda ili metoksi, $C_{1-2}$-alkil, formil, $NH_2CO$ ili etinil grupu, $R^6$ označava atom vodonika, fluora, hlora, broma ili joda ili $C_{1-2}$-alkil ili amino grupu, gde, ukoliko nije drugačije naznačeno, pojam "heteroaril grupa" koji je ovde naveden u definiciji označava monocikličnu 5- ili 6-članu heteroaril grupu, pri čemu 6-člana heteroaril grupa sadrži jedan, dva ili tri atoma azota, a 5-člana heteroaril grupa sadrži imino grupu opciono supstituisanu sa $C_{1-3}$-alkil grupom, ili atom kiseonika ili sumpora, ili imino grupu opciono supstituisanu sa $C_{1-3}$-alkil grupom ili atomom kiseonika ili sumpora i dodatno jednim ili dva atoma azota, ili imino grupu opciono supstituisanu sa $C_{1-3}$-alkil grupom i tri atoma azota, a osim toga fenil prsten je opciono supstituisan sa atomom fluora, hlora ili broma, $C_{1-3}$-alkil, hidroksi, $C_{1-3}$-alkiloksi grupom, amino, $C_{1-3}$-alkilamino, di-($C_{1-3}$-alkil)-amino ili $C_{3-6}$-cikloalkilenimino grupom, fenilni prsten može biti spojen za gore navedene heteroaril grupe preko dva susedna atoma ugljenika, a veza je ostvarena preko atoma azota ili atoma ugljenika heterocikličnog ostatka ili spojena na fenilni prsten, i gde, ukoliko nije drugačije naznačeno, pojam "halogen atom" naveden ranije u definiciji označava atom odabran između fluora, hlora, broma i joda, i gde alkil, alkenil, alkinil i alkiloksi grupe koje su sadržane u ranije navedenim definicijama koje imaju više od dva atoma ugljenika mogu, ukoliko nije drugačije ukazano, biti ravnog lanca ili razgranate, a alkil grupe u prethodno navedenim dialkilisanim grupama, na primer dialkilamino grupe, mogu biti identične ili različite, a atomi vodonika metil ili etil grupe koje su sadržane u ranije navedenim definicijama, ukoliko nije drugačije naznačeno, mogu biti u celosti ili delimično zamenji sa atomima fluora, njihovi tautomeri, enantiomeri, diastereomeri, smeše i soli.

Prijava sadrži još 12 patentnih zahteva.

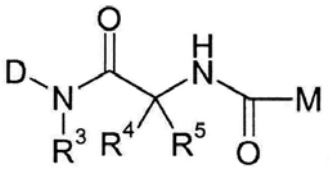

(I)

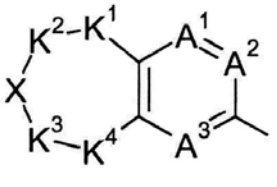

(II)

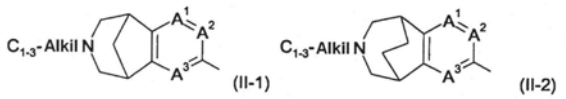


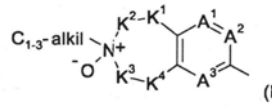


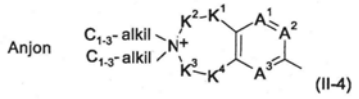


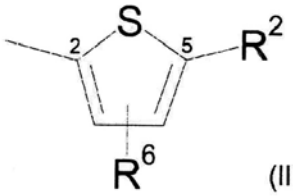


**(51)** ***C 07 D 417/08*** (2006.01) **(11) 51566**
**(13) B**
(21) P-2011/0045 (22) 11.06.2008.
(30) US 12.06.2007. 943440P
(86) WO 11.06.2008. PCT/GB2008/050431
(87) WO 18.12.2008. WO 2008/152418
(96) 11.06.2008. 08762541.4
(97) 17.11.2010. EP2158199B 2010/46 EN

**(54) PIPERIDINSKA JEDINJENJA I NJIHOVA UPOTREBA**

PIPERIDINE COMPOUNDS AND USES THEREOF

(73) ASTRAZENECA AB,, 151 85 Södertälje, SE
(72) BASARAB, Gregory, AstraZeneca R & D Boston, 35 Gatehouse Drive, Waltham, Massachusetts 02451, US; HILL, Pamela, AstraZeneca R & D Boston, 35 Gatehouse Drive, Waltham, Massachusetts 02451, US; ZHOU, Fei, AstraZeneca R & D Boston, 35 Gatehouse Drive, Waltham, Massachusetts 02451, US
(74) RISTIĆ, Dragoslav i ost., Cara Lazara 7, 11000 Beograd, RS

(57) Jedinjenje, **naznačeno time**, daje predstavljeno sa formulom (Ia): $R^1$ je hloro ili cijano; R je vodonik, hloro, cijano ili metil; $R^3$ je fluoro, metil, metoksi, etoksi, propoksi, aliloksi i benziloksi; $R^4$ je vodonik ili $C_{1-4}$alkil; Prsten A je karbociklil ili heterociklil; gde ako pomenuti heterociklil sadrži neki -NH-ostatak, tada azot može da bude ponekad supstituisan sa grupom koja je izabrana iz $R^6$; i gde ako pomenuti heterociklil sadrži neki -N= ostatak, tada azot može da formira kvaternarno jedinjenje sa metilnom grupom; $R^5$ je neki supstituent na ugljeniku i je izabran iz halo, nitro, cijano, hidroksi, amino, karboksi, karbamoila, merkapto, sulfamoila, sulfo, formila, ureido, hidroksiiminometila, N-hidroksiformamido, hidrazinokarbonila, N-hidroksietanimidoila, amino(hidroksiimiho) metila, $C_{1-4}$alkila, $C_{2-4}$alkenila, $C_{2-4}$alkinila, $C_{1-4}$alkoksi, $C_{1-4}$alkanoila, $C_{1-4}$alkanoiloksi, N-($C_{1-4}$alkil)amino, N,N-($C_{1-4}$alkil)$_2$amino, $C_{1-4}$alkanoilamino, N-($C_{1-4}$ alkil)karbamoila, N,N-($C_{1-4}$alkil)$_2$karbamoila, N-($C_{1-4}$alkoksi)karbamoila, N'-($C_{1-4}$alkil)ureido, N,N'-($C_{1-4}$alkil)$_2$ureido, N-($C_{1-4}$alkil)-N-($C_{1-4}$alkoksi)karbamoila, $C_{1-4}$alkils(O)$_a$ gde a je 0 do 2, $C_{1-4}$alkoksikarbonila, $C_{1-4}$alkoksikarbonilamino, N-($C_{1-4}$alkil)sulfamoila, N,N-($C_{1-4}$alkil)$_2$sulfamoila, $C_{1-4}$alkilsulfonilamino, $C_{1-4}$alkilsulfonilaminokarbonila, N'-($C_{1-4}$alkil)hidrazinokarbonila, N',N'-($C_{1-4}$alkil)$_2$hidrazinokarbonila, karbociklil-$R^7$- ili heterociklil-$R^8$-; gde $R^5$ može da ponekad bude supstituisan na ugljeniku sa jednim ili više $R^9$; i gde ako pomenuti heterociklil sadrži neki -NH-ostatak, tada azot može ponekad da bude supstituisan uz pomoć neke grupe koja je izabrana iz $R^{10}$;

n je 0, 1,2 ili 3;$R^9$ je izabrana iz halo, nitro, cijano, hidroksi, amino, karboksi, karbamoila, merkapto, sulfamoila, $C_{1-4}$alkila, $C_{2-4}$alkenila, $C_{2-4}$alkinila, $C_{1-4}$alkoksi, $C_{1-4}$alkanoila, $C_{1-4}$alkanoiloksi, N-($C_{1-4}$alkil)amino, N,N-($C_{1-4}$alkil)$_2$amino, $C_{1-4}$alkanoilamino, N-($C_{1-4}$alkil)karbamoila, N,N-($C_{1-4}$alkil)$_2$karbamoila, $C_{1-4}$alkilS(O)$_a$ gde a je 0 do 2, $C_{1-4}$alkoksikarbonila, N-($C_{1-4}$alkil)sulfamoila, N,N-($C_{1-4}$alkil)$_2$sulfamoila, $C_{1-4}$alkilsulfonilamino, C1-$_4$alkoksikarbonilamino, karbociklil-$R^{11}$- ili heterociklil-$R^{12}$-; gde $R^9$ može ponekad da bude supstituisan na ugljeniku uz pomoć jednog ili više $R^{13}$; i gde ako pomenuti heterociklil sadrži neki -NH- ostatak, tada azot može da bude ponekad supstituisan uz pomoć neke grupe koja je izabrana iz $R^{14}$; $R^6$, $R^{10}$ i $R^{14}$ su nezavisno izabrani iz $C_{1-4}$alkila, $C_{1-4}$alkanoila, $C_{1-4}$alkilsulfonila, $C_{1-4}$alkoksikarbonila, karbamoila, N-($C_{1-4}$alkil)karbamoila, N,N -($C_{1-4}$alkil)karbamoila, benzoila, benziloksikarbonila, benzoila i fenilsulfonila; gde $R^6$, $R^{10}$ i $R^{14}$ mogu da budu nezavisno supstituisani na ugljeniku uz pomoć neke grupe koja je izabrana iz $R^{20}$; $R^7$, $R^8$, $R^{11}$ i $R^{12}$ su nezavisno izabrani iz direktne veze, -O-, -N($R^{15}$)-, -C-(O)-, -N($R^{16}$)C(O)-, -C(O)N($R^{17}$)-, -S(O)$_p$-, -SO$_2$N($R^{18}$)- ili -N($R^{19}$)SO$_2$-; gde $R^{15}$, $R^{16}$, $R^{17}$, $R^{18}$ i $R^{19}$ su nezavisno izabrani iz vodonika ili $C_{1-4}$alkila, a p je 0-2; $R^{13}$ i $R^{20}$ su nezavisno izabrani iz halo, nitro, cijano, hidroksi, trifluorometoksi, trifluorometila, amino, karboksi, karbamoila, merkapto, sulfamoila, metila, etila, etenila, etinila, metoksi, etoksi, 2-trimetilsililetoksi, acetila, acetoksi, metilamino, etilamino, dimetilamino, dietilamino, N-metil-N-etilamino, acetilamino, N-metilkarbamoila, N-etilkarbamoila, N,N-dimetilkarbamoila, N,N-dietilkarbamoila, N-metil-N-etilkarbamoila, metiltio, etiltio, metilsulfinila, etilsulfinila, mesila, etilsulfonila, metoksikarbonila, etoksikarbonila, N-metilsulfamoila, N-etilsulfamoila, N,N-dimetilsulfamoila, N,N-dietilsulfamoila ili N-metil-N-etilsulfamoila; ili neka njegova farmaceutski prihvatljiva so.

Prijava sadrži još 14 zavisnih patentnih zahteva.

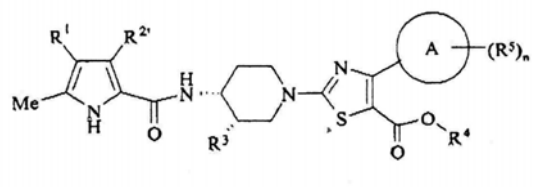

(Ia)

**(51)** ***C 07 D 451/10*** (2006.01) **(11) 51599**
***A 61 K 31/46*** (2006.01) **(13) B**
***A 61 P 11/00*** (2006.01)
(21) P-2006/0291 (22) 29.10.2004.
(43) 05.06.2008.
(30) EP 03.11.2003. 03025077.3
(86) WO 29.10.2004. PCT/EP2004/012269
(87) WO 12.05.2005. WO 2005/042527 A1
**(54) NOVI KRISTALNI ANHIDRAT SA ANTIHOLINERGIJSKIM DEJSTVOM**
NOVEL CRYSTALLINE ANHYDRIDE WITH ANTICHOLINERGIC EFFECT
(73) BOEHRINGER INGELHEIM INTERNATIONAL GMBH, Binger Strasse 173, 55216 Ingelheim, DE
(72) PFRENGLE, Waldemar, Wittlingerweg 14, 88400 Biberach, DE; SIEGER, Peter, Klingenäcker 7, 88441 Mittelbiberach, DE
(74) PLAVŠA, Drago i ost., Strumička 51, 11050 Beograd, RS
(57) Bezvodni, kristalni tiotropijumbromid, **naznačen time,** što u rendgenogramu praha, između ostalih, ima sledeće karakteristične vrednosti, d = 6, 02 Å; 4, 95 Å; 4, 78 Å; 3, 93 Å i 3, 83 Å.
Prijava sadrži još 9 patentnih zahteva.

**(51)** ***C 07 D 471/04*** (2006.01) **(11) 51605**
***A 61 K 31/437*** (2006.01) **(13) B**
***A 61 P 35/00*** (2006.01)
***C 07 D 471/16*** (2006.01)
(21) P-2005/0362 (22) 21.10.2003.
(43) 15.11.2007.
(30) FR 23.10.2002. 02/13264
(86) WO 21.10.2003. PCT/FR2003/03110
(87) WO 21.05.2004. WO 2004/041817
**(54) 3-FENIL SUPSTITUISANI PIRIDOINDOLON, NJEGOVA IZRADA I TERAPEUTSKA UPOTREBA**
3-PHENYL SUBSTITUTED PYRIDOINDOLONE, PREPARATION AND THERAPEUTIC USE THEREOF
(73) SANOFI-AVENTIS, 174, avenue de France, F-75013 Paris, FR
(72) BOURRIE, Bernard, 678, rue de la Colline, F-34980 Saint-Gély-du-Fesc, FR; CASELLAS, Pierre, 10, rue Carl von Linné, F-34000 Montpellier, FR; CIAPETTI, Paola, 39, domaine de l'Ile, F-67400 Illkirch-Graffenstaden, FR; DEROCQ, Jean-Marie, 6, rue des Clauzes, F-34570 Murviel-les-Montpellier, FR; JEGHAM, Samir, 206, rue des Asphodelles, FR-34980 Montferrier-Sur-Lez, FR; MUNEAUX, Yvette, 266, chemin des Pérayrols, F-34270 Les Matelles, FR; WERMUTH, Camille-Georges, 3, rue de la Côte d'Azur, F-67100 Strasbourg, FR
(74) POPOVIĆ, Srđa i ost., Takovska 19, 11000 Beograd, RS
(57) Jedinjenje koje odgovara formuli: čemu:
- $R_1$ predstavlja atom vodonika, $(C_1\text{-}C_4)$alkil grupu ili $(CH_2)_nOH$, $(CH_2)_n$-O-tetrahidropiran-2-il, $(CH_2)_nNR'_6R'_7$, $(CH_2)_nCN$, $(CH_2)_nCO_2(C_1\text{-}C_4)$alkil ili $(CH_2)_nCONR_6R_7$ grupu; - $R_2$ predstavlja atom vodonika ili $(C_1\text{-}C_4)$alkil grupu; - ili $R_1$ i $R_2$ zajedno formiraju $(CH_2)_3$ grupu;
- $R_3$ predstavlja fenil grupu monosupstituisanu sa hidroksilnom, hidroksimetil, karboksil, $(C_1\text{-}C_4)$alkanoil, azido, $(C_1\text{-}C_4)$alkoksikarbonil, hidroksiiminometil, $(C_1\text{-}C_4)$alkilsulfonil, trifluorometil, tiol, $(C_1\text{-}C_4)$alkiltio ili cijano grupom ili sa $(CH_2)_mNR'_7R_{10}$, $CONR_6R_8$ ili $O(CH_2)_nR_9$ grupom; fenil grupu supstituisanu sa 2 do 5 identična ili različita supstituenta izabrana od atoma halogena, $(C_1\text{-}C_4)$alkil, trifluorometil, hidroksil, hidroksimetil, $(C_1\text{-}C_4)$alkoksi, karboksil, $(C_1\text{-}C_4)$alkanoil, azido, $(C_1\text{-}C_4)$alkoksikarbonil, hidroksiiminometil, tiol, $(C_1\text{-}C_4)$alkiltio ili $(C_1\text{-}C_4)$alkilsulfonil grupe ili fenil ili cijano grupom, ili sa $(CH_2)_mNR'_7R_{10}$, $CONR_6R_8$ ili $O(CH_2)_nR_9$ grupom; ili $R_3$ predstavlja benzodioksolil grupu koja je nesupstituisana ili supstituisana na fenil grupi sa atomom halogena;
- $R_4$ i $R_5$ su identični ili različiti i svaki nezavisno predstavlja atom vodonika ili halogena ili hidroksil, $(C_1\text{-}C_4)$alkil, trifluorometil, fenil, cijano, $(C_1\text{-}C_4)$alkoksi, $(C_1\text{-}C_4)$alkoksikarbonil ili $(C_1\text{-}C_4)$alkilsulfonil grupu ili neku $O\text{-}(CH_2)_nNR_6R_7$ ili $(CH_2)_nNR_6R_7$ grupu;
- $R_6$ predstavlja vodonik ili $(C_1\text{-}C_4)$alkil grupu;
- $R_7$ predstavlja vodonik ili $(C_1\text{-}C_4)$alkil grupu;
- ili $R_6$ i $R_7$, zajedno sa atomom azota za koji su vezani, formiraju heterociklični radikal izabran od: piperidila, morfolinila, pirolidinila, piperazinila ili 4-metilpiperazin-1-ila; - $R'_6$ predstavlja vodonik ili $(C_1\text{-}C_4)$alkil grupu;
- $R'_7$ predstavlja vodonik ili $(C_1\text{-}C_4)$alkil grupu; - ili $R'_6$ i $R'_7$, zajedno sa atomom azota za koji su vezani, formiraju heterociklični radikal izabran od morfolinila ili pirolidinila;
- $R_8$ predstavlja vodonik, $(C_1\text{-}C_4)$alkil grupu ili $-(CH_2)_nNR_6R_7$ grupu; - ili $R_6$ i $R_8$, zajedno sa atomom azota za koji su vezani, formiraju heterociklični radikal izabran od: piperidila, morfolinila, pirolidinila, piperazinila ili 4-metilpiperazin-1-ila;
- $R_9$ predstavlja fenil radikal ili neku amino, morfolin-4-il, cijano ili $(C_1\text{-}C_4)$alkoksi karbonil grupu;
- $R_{10}$ predstavlja $R_6$ ili fenil, piridil ili pirimidinil grupu ili $(CH_2)_nNR'_6R'_7$ grupu; - ili $R'_7$ i $R_{10}$, zajedno sa atomom azota za koji su vezani, formiraju heterociklični radikal izabran od piperazinila ili 4-metilpiperazin-2-ila;
- n predstavlja 1, 2 ili 3;
- m predstavlja 0 ili 1;
- Alk predstavlja alkil grupu; u baznom obliku ili u obliku soli nastale dodatkom kiseline i u obliku hidrata ili solvata.
Prijava sadrži još 7 patentnih zahteva.

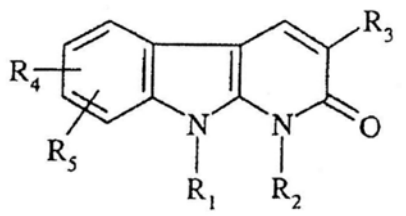

(I)

**(51)** ***C 07 D 471/04*** (2006.01) **(11) 51590**
***A 61 P 35/04*** (2006.01) **(13) B**
***A 61 K 31/4375*** (2006.01)
(21) P-2011/0042 (22) 23.02.2006.
(30) US 24.02.2005. 655981P
(86) WO 23.02.2006. PCT/US2006/006283
(87) WO 31.08.2006. WO 2006/091671
(96) 23.02.2006. 06735794.7
(97) 01.12.2010. EP1904494B 2010/48 EN

**(54) JEDINJENJE IMIDAZO[1, 2-A]PIRIDINA KAO INHIBITORI VEGF-R2**

IMIDAZO[1, 2-A]PYRIDINE COMPOUNDS AS VEGF-R2 INHIBITORS

(73) ELI LILLY AND COMPANY, Lilly Corporate Center, Indianapolis, IN 46285, US

(72) BARDA, David, Anthony, 8136 Ecole Street, Indianapolis, Indiana 46240, US; BURKHOLDER, Timothy, Paul, 13904 Springmill Ponds Circle, Carmel, Indiana 46032, US; CLAYTON, Joshua, Ryan, 12803 Shepherds Way, Fishers, Indiana 46037, US; HAO, Yan, 3865 Castle Rock Drive, Zionsville, Indiana 46077, US; HEATH, Perry, Clark, 443 Mellowood Drive, Indianapolis, Indiana 46217, US; HENRY, James, Robert, 7307 Elm Ridge Drive, Indianapolis, Indiana 46236, US; KNOBELOCH, John, Monte, 225 Val Del Court, Indianapolis, Indiana 46227, US; MENDEL, David, 11348 Woods Bay Lane, Indianapolis, Indiana 46236, US; MCLEAN, Johnathan, Alexander, 7513 Terrace Beach, Indianapolis, Indiana 46240, US; REMICK, David, Michael, 12261 Quarry Court, Fishers, Indiana 46037, US; REMPALA, Mark, Edward, 5941 Marina View Drive, Indianapolis, Indiana 46237, US; WANG, Zhao-Qing, 7222 Sycamore Run Drive, Indianapolis, Indiana 46237, US; YIP, Yvonne, Yee, Mai, 1441 Badger Drive, Indianapolis, Indiana 46260, US; ZHONG, Boyu, 11261 Williams Court, Carmel, Indiana 46033, US

(74) POPOVIĆ, Srđa i ost., Takovska 19, 11000 Beograd, RS

(57) Jedinjenje formule (I): gde: $R^1$ je (a) 2-piridonil po izboru supstituisan sa $-(CH_2)_{1-4}NR^2R^3$; or (b) fenil, tienil, tiazolil, imidazolil, pirazolil, triazolil, oksazolil, piridinil, N-okso-piridinil, ili pirimidinil, gde su svi po izboru supstituisani sa $-(CH_2)_{0-4}NR^2R^3$, $C_1$-$C_6$ alkil po izboru supstituisan sa amino, pirolidinil, ili morfolinil, ili 1-2 supstituenata nezavisno odabrana iz grupe koju čine $C_1$-$C_4$ alkoksi, halo, ($C_1$-$C_6$ alkil)sulfonil, nitro, -sulfonil$(CH_2)_{0-4}NR^2R^3$, i -karbonil$(CH_2)_{0-4}NR^2R^3$;
$R^2$ je vodonik ili $C_1$-$C_6$ alkil po izboru supstituisan sa hidroksi;
$R^3$ je vodonik ili $C_1$-$C_6$ alkil po izboru supstituisan sa hidroksi, trifluorometil, ili pirolidinil; ili $R^2$, $R^3$, i azot za koji su vezani obrazuju piperidinil, piperazinil po izboru supstituisan sa $C_1$-$C_6$ alkil, ili morfolinil;
$R^4$ je fenil po izboru supstituisan sa 1-3 supstituenta odabranih iz grupe koju čine halo, amino, metil, trifluorometil, i nitro;
$R^5$ je $C(O)NHR^6$, $OC(O)NHR^6$, $NHC(O)CH_2R^6$, $NHC(O)NHR^6$ ili $C(S)NHR^6$;
n je 0-4 za $OC(O)NHR^6$, $NHC(O)CH_2R^6$, $NHC(O)NHR^6$ i n je 1-4 za $C(O)NHR^6$ i $C(S)NHR^6$; i $R^6$ je (a) nesupstituisan tetrahidrobenzotiazolil; ili (b) fenil, piridinil, pirimidinil, pirazolil, tiazolil, isotiazolil, tiadiazolil, izoksazolil, gde su svi po izboru supstituisani sa 1-3 supstituenata nezavisno odabrana iz grupe koju čine $C_1$- $C_6$ alkil po izboru supstituisan sa hidroksi, dimetilamino, pirolidinil, piperidinil, ili morfolinil, $C_2$-$C_6$ alkenil po izboru supstituisan sa dimetilaminokarbonil, $C_1$-$C_6$ alkoksi, trifluorometil, difluorometoksi, trifluorometoksi, dimetilaminoetoksi, fenoksi, tolil, halo, metilsulfonil, dimetilamino, dietilamino, cijano, $C_3$-$C_6$ cikloalkil po izboru supstituisan sa hidroksi, metoksi, metoksietoksi, ili metil, 3,4-dimetilizoksazol-5-il-aminosulfonil, tetrahidropiranil, tetrahidropiranilaminokarbonil, $C_2$-$C_6$ alkilkarbonil, morfolinilkarbonil, i piperazinilkarbonil; ili njegove farmaceutski prihvatljive soli.
Prijava sadrži još 10 zavisnih patentnih zahteva.

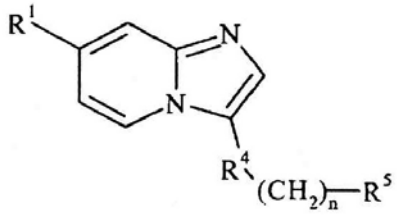

(I)

**(51)** ***C 07 D 471/08*** (2006.01) **(11) 51587**
**(13) B**
(21) P-2006/0314 (22) 15.10.2004.
(43) 07.08.2008.
(30) FR 17.10.2003. 03/12, 165
(86) WO 15.10.2004. PCT/FR2004/002643
(87) WO 28.04.2005. WO 2005/037783 A3

**(54) DERIVATI N-HETEROCIKLILMETILBENZAMIDA, POSTUPAK ZA NJIHOVO DOBIJANJE I NJIHOVA UPOTREBA KAO LEKA**

DERIVATIVES OF N-HETEROCYCLYLMETHYLBENZAMIDES, PREPARATION METHOD THEREOF AND APPLICATION OF SAME IN THERAPEUTICS

(73) SANOFI-AVENTIS, 174, avenue de France, F-75013 Paris, FR
(72) DARGAZANLI, Gihad, 47, boulevard de la Vanne, F-94230 Cachan, FR; ESTENNE-BOUHTOU, Geneviève, 18, rue des Jardins, F-94550 Chevilly-Larue, FR; MAGAT, Pascale, 34, avenue Mazarin, F-91380 Chilly-Mazarin, FR; MARABOUT, Benoît, 45 bis, rue de Versailles, F-91300 Massy, FR; ROGER, Pierre, 6, rue Paul Valéry, F-78180 Montigny le Bretonneux, FR
(74) POPOVIĆ, Srđa i ost., Takovska 19, 11000 Beograd, RS
(57) Jedinjenje opšte formule (I) gde R predstavlja atom vodonika ili vinil grupu;
n predstavlja 0 ili 1 ili 2 kada R predstavlja atom vodonika i n predstavlja 1 kada R predstavlja vinil grupu;
X predstavlja grupu formule CH ili atom azota kada R predstavlja atom vodonika i X predstavlja grupu formule CH kada R predstavlja vinil grupu;
$R_1$ predstavlja ili fenil ili naftil grupu opcionalno supstituisanu sa jednim ili više supstituenata odabranih od halogen atoma, linearnih ili razgranatih ($C_1$-$C_6$) alkil, hidroksil i ($C_1$-$C_6$) alkoksi grupa, trifluormetil grupe, ili cikloheksil grupa, ili heteroaril grupe odabrane od tienil, piridinil, oksazolil, furanil, tiazolil, hinolinil, i isohinolinil grupa;
$R_2$ predstavlja ili atom vodonika, ili jedan ili više supstituenata odabranih od atoma halogena i trif luorometil, ($C_1$-$C_6$) alkil, ($C_1$-$C_6$) alkoksi, tienil, feniloksi, hidroksil, merkapto, tio($C_1$-$C_6$)alkil i cijano grupa ili grupa opšte formule -$NR_4R_5$, $SO_2NR_4R_5$, -$SO_2$-($C_1$-$C_6$) alkil, -$SO_2$-fenil, -$CONR_4R_5$, -$COOR_7$, -CO- ($C_1$-$C_6$) alkil, -CO-fenil, -$NHCOR_8$, -$NHSO_2$- ($C_1$-$C_6$) alkil, -$NHSO_2$-fenil i -$NHSO_2NR_4R_5$ ili grupu formule -$OCF_2O$ vezanu za 2- i 3-položaj fenil grupe; grupe ($C_1$-$C_6$) alkil, ($C_1$-$C_6$) alkoksi, -$SO_2$- ($C_1$-$C_6$) alkil, -CO- ($C_1$-$C_6$) alkil i -$NHSO_2$- ($C_1$-$C_6$) alkil mogu biti opcionalno supstituisane sa jednom ili više $R_3$ grupa; grupe fenil, -$SO_2$-fenil, -CO-fenil i -$NHSO_2$-fenil mogu biti opcionalno supstituisane sa $R_6$ grupom;
$R_3$ predstavlja halogen atom, ili fenil, ($C_1$-$C_6$) alkoksi ili -$NR_4R_5$ grupu;
$R_4$ i $R_5$ predstavljaju, nezavisno jedan od drugoga, atom vodonika ili ($C_1$-$C_6$) alkil grupu ili $R_4$ i $R_5$ formiraju zajedno sa azotom koji im je zajednički pirolidinski prsten, piperidinski prsten ili morfolinski prsten.
$R_6$ predstavlja atom vodonika, halogen atom, trifluormetil grupu, cijano grupu, hidroksi grupu, merkapto grupu, ($C_1$-$C_6$) alkil ili ($C_1$-$C_6$) alkoksi grupu;
$R_7$ predstavlja atom vodonika ili ($C_1$-$C_6$) alkil grupu opcionalno supstituisanu sa jednim ili više grupa $R_3$, ili fenil grupu opcionalno supstituisanu sa grupom $R_6$;
$R_8$ predstavlja ($C_1$-$C_6$) alkil grupu opcionalno supstituisanu sa jednom ili više grupa $R_3$, ili ($C_1$-$C_6$) alkoksi grupu, ili fenil grupu opcionalno supstituisanu sa grupom $R_6$, U obliku slobodne baze ili adicione soli sa kiselinom, hidrata ili solvata.
Prijava sadrži još 8 patentnih zahteva.

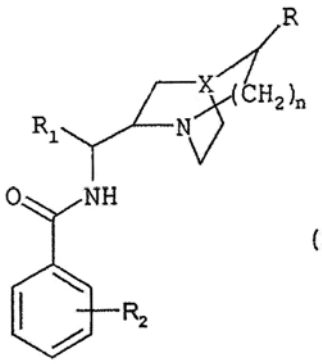

(I)

---

**(51)** ***C 07 D 487/04*** (2006.01) **(11) 51574**
***A 61 K 31/519*** (2006.01) **(13) B**
***A 61 P 37/00*** (2006.01)
(21) P-2002/0413 (22) 23.11.2000.
(43) 15.03.2005.
(30) US 10.12.1999. 60/170, 179
(86) WO 23.11.2000. PCT/IB00/01742
(87) WO 14.06.2001. WO 01/42246 A2
**(54) JEDINJENJA PIROLO (2, 3-d) PIRIMIDINA**
PYRROLO (2, 3-d)PYRIMIDINE COMPOUNDS
(73) PFIZER PRODUCTS INC., Eastern Point Road, Groton, CT 06340, US
(72) BLUMENKOPF, Todd Andrew, Pfizer Global Research & Development, Eastern Point Road, Groton, CT 06340, US; FLANAGAN, Mark Edward, Pfizer Global Research & Development, Eastern Point Road , Groton, CT 06340, US; MUNCHHOF, Michael J., Global Research & Development, Eastern Point Road , Groton, CT 06340, US
(74) POPOVIĆ, Srđa i ost., Takovska 19, 11000 Beograd, RS
(57) Jedinjenje opšte formule ili njegova farmaceutski prihvatljiva so; pri čemu $R^1$ je grupa formule pri čemu je y, 0, 1 ili 2;
$R^4$ je izabran iz grupe koja sadrži vodonik, ($C_1$-$C_6$)a1kil, ($C_1$-$C_6$)alkilsulfonil, ($C_1$-$C_6$)a1kenil, ($C_2$-$C_6$)alkinil grupe, pri čemu su alkil, alkenil i alkinil grupe po potrebi supstituisane sa deuterijumom, hidroksi, amino, trifluorometil, ($C_1$-$C_6$)alkoksi, ($C_1$-$C_6$)aciloksi, ($C_1$-$C_6$) alkilamino, (($C_1$-$C_6$)alkil)$_2$amino, cijano, nitro, ($C_2$-$C_6$) a1kenil, ($C_2$-$C_6$)a1kinil ili ($C_1$-$C_6$)acilamino grupama; ili je $R^4$ ($C_3$-$C_{10}$)cikloalkil, pri čemu je cikloalkil grupa po potrebi supstituisana sa deuterijumom, hidroksi, amino, trifluorometil, ($C_1$-$C_6$)aciloksi, ($C_1$-$C_6$) a1kilamino, (($C_1$-$C_6$) alkil)$_2$amino, cijano, cijano($C_1$-$C_6$)alkil, trifluorometil ($C_1$-$C_6$)alkil, nitro, nitro($C_1$-$C_6$)alkil ili ($C_1$-$C_6$)acilamino grupom;
$R^5$ je piperidinil supstituisan jednim do pet karboksi, cijano, amino, deuterijum, hidroksi, ($C_1$-$C_6$)a1kil, ($C_1$-$C_6$) alkoksi, halo, ($C_1$-$C_6$)acil, ($C_1$-$C_6$)alkilamino, amino($C_1$-$C_6$)alkil, ($C_1$-$C_6$)alkoksi-CO-NH, ($C_1$-$C_6$)alkilamino-CO-, ($C_2$-$C_6$)alkenil, ($C_2$-$C_6$)alkinil, hidroksi($C_1$-$C_6$)alkil, ($C_1$-$C_6$)

alkoksi($C_1$-$C_6$)alkil, ($C_1$-$C_6$)aciloksi($C_1$-$C_6$)alkil, nitro, cijano(Ci-$C_6$)alkil, halo(Ci-$C_6$)alkil, nitro($C_1$-$C_6$)alkil, trifluorometil, trifluorometil($C_1$-$C_6$)alkil, ($C_1$-$C_6$) acilamino, ($C_1$-$C_6$)acilamino($C_1$-$C_6$)alkil, ($C_1$-$C_6$) alkoksi ($C_1$-$C_6$)acilamino, amino(C1-C6)acil, amino($C_1$-$C_6$)acil ($C_1$-$C_6$)alkil, ($C_1$-$C_6$)alkilamino($C_1$-$C_6$)acil, (($C_1$-$C_6$) alkil)$_2$amino($C_1$-$C_6$)acil, $R^{15}R^{16}$N-CO-O-, $R^{15}R^{16}$N-CO-($C_1$-$C_6$)alkil, ($C_1$-$C_6$)alkil-S(O)$_m$, $R^{15}R^{16}$NS(O)$_m$, $R^{15}R^{16}$NS(O)$_m$ ($C_1$-$C_6$)alkil, $R^{15}$S(O)$_m R^{16}$N, $R^{15}$S(O)$_m R^{16}$N ($C_1$-$C_6$)alkil grupa, pri čemu je m 0, 1 ili 2, a $R^{15}$ i $R^{16}$ su svaki nezavisno izabrani od vodonika ili ($C_1$-$C_6$)alkil grupe; ili grupa koja ima formulu pri čemu a je 0, 1, 2, 3 ili 4; b, c, e, f i g su svaki nezavisno 0 ili 1; d je O, 1, 2 ili 3; X je S(O)$_n$ pri čemu nje 0, 1 ili 2; kiseonik, karbonilna ili -C(=N-cijano)-grapa; y je S(O)$_n$ pri čemu nje 0, 1 ili 2; ili karbonil grupa; i Z je karbonil, C(O)O-, C(O)NR- ili S(O)$_n$ grupa pri čemu nje 0, 1 ili 2;

R , R , R , R\ R i R su svaki nezavisno izabrani iz grupe koja sadrži vodonik ili ($C_1$-$C_6$)alkil grupu po potrebi supstituisanu sa deuterijumom, hidroksi, amino, trifluorometil, ($C_1$-$C_6$)aciloksi, ($C_1$-$C_6$)alkilamino, (($C_1$-$C_6$) alkil)$_2$amino, cijano, cijano($C_1$.$C_6$)alkil, trifluromet il($C_1$-$C_6$) alkil, nitro, nitro($C_1$-$C_6$)alkil ili ($C_1$-$C_6$) acilamino grupom;

$R^{12}$ je karboksi, cijano, amino, okso, deuterijum, hidroksi, trifluorometil, ($C_1$-$C_6$)alkil, trifluorometil, ($C_1$-$C_6$)alkil, ($C_1$-$C_6$)alkoksi, halo, ($C_1$-$C_6$)acil, ($C_1$-$C_6$)alkilamino, (($C_1$-$C_6$)alkil)$_2$amino, amino($C_1$-$C_6$)alkil, ($C_1$-$C_6$)alkoksi-CO-NH, ($C_1$-$C_6$)alkilamino-CO-, ($C_2$-$C_6$)alkenil, ($C_2$-$C_6$)alkinil, hidroksi($C_1$-$C_6$)alkil, ($C_1$-$C_6$)alkoksi($C_1$-$C_6$)alkil, ($C_1$-$C_6$)aciloksi($C_1$-$C_6$)alkil, nitro, cijano($C_1$-$C_6$)alkil, halo($C_1$-$C_6$)alkil, nitro($C_1$-$C_6$)alkil, ($C_1$-$C_6$)acilamino, ($C_1$-$C_6$)acilamino($C_1$-$C_6$)alkil, ($C_1$-$C_6$)alkoksi($C_1$-$C_6$) acilamino, amino($C_1$-$C_6$)acil, amino($C_1$-$C_6$)acil($C_1$-$C_6$) alkil, ($C_1$- $C_6$)alkilamino($C_1$-$C_6$)acil, (($C_1$-$C_6$)alkil)$_2$ amino($C_1$-$C_6$)acil, $R^{15}R^{16}$N-CO-O-, $R^{15}R^{16}$N-CO-($C_1$-$C_6$)alkil, $R^{15}$C(O)NH, $R^{15}$OC(O)NH, $R^{15}$NHC(O)NH, ($C_1$-$C_6$)alkil-S(O)$_m$, ($C_1$-$C_6$)alkil- S(O)$_m$-($C_1$-$C_6$)alkil, $R^{15}R^{16}$NS(O)$_m$, $R^{15}R^{16}$NS(O)$_m$-($C_1$-$C_6$)alkil, $R^{15}$S(O)$_m R^{16}$N, $R^{15}$S(O)$_m R^{16}$N-($C_1$-$C_6$)alkil grupom, pri čemu m je 0, 1 ili 2, a $R^{15}$ i $R^{16}$ su svaki nezavisno izabrani od vodonika ili ($C_1$-$C_6$)alkil grupe; $R^2$ je vodonik, halogen ili ($C_1$-$C_6$)alkil, i $R^3$ je vodonik.

Prijava sadrži još 11 patentnih zahteva.

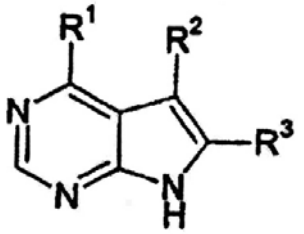

I

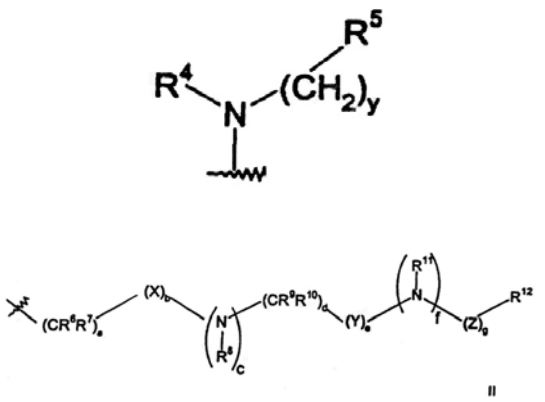

II

**(51)** ***C 07 D 487/08*** (2006.01) **(11) 51568**
**(13) B**
(21) P-2011/0031 (22) 27.02.2006.
(30) US 04.03.2005. 658791P
(96) 27.02.2006. 09158939.0
(97) 10.11.2010. EP2112153B 2010/45 EN

**(54) POSTUPAK SMANJENJA ALFA, BETA NEZASIĆENIH KETONA U OPIOIDNIM KOMPOZICIJAMA**

METHOD OF REDUCING ALPHA, BETA- UNSATURATED KETONES IN OPIOID COMPOSITIONS

(73) EURO-CELTIQUE S.A., 2, avenue Charles de Gaulle, 1653 Luxembourg, LU
(72) KUPPER, Robert, Joe, 755 Major Potter Road, East Greenwich, RI 02818, US
(74) JANKOVIĆ, Ivan i ost., Vlajkovićeva 28, 11000 Beograd, RS

(57) Postupak za smanjenje količine α, β-nezasićenih ketona u opioidnoj analgetičkoj kompoziciji koji se sastoji od hidrogenizacije polazne opioidne analgetičke kompozicija koja ima nečistoće α, β-nezasićenih ketona sa diimidom, 10 jedinjenjem koje daje diimid ili njihovom kombinacijom u pogodnom rastvaraču, da bi se dobila rezultujuća opioidna analgetička kompozicija koja ima nivo α, β -nezasićenih ketona manji od polazne kompozicije, a gde je opioidni analgetik jedinjenje formule (III): gde R je izabran iz grupe koju čine vodonik; $C_{1-8}$ alkil; $C_{3-6}$cikloalkil; ($C_{3-6}$)cikloalkil($C_{1-3}$) alkil; fenil($C_{1-3}$)alkil; i fenil($C_{1-3}$)alkil supstituisan sa 1-3 člana grupe koju čine $C_{1-8}$ alkil, trifluorometil, nitro, dialkilamino i cijano;

$R_1$ je izabran iz grupe koju čine vodonik; $C_{1-8}$alkil; $C_{3-6}$ cikloalkil; $C_{1-8}$alkoksi; $C_{3-6}$cikloalkoksi; 2-(4-morfolinil) etil; benziloksikarbonil; $(R_8)_3$C(O)-; fenil($C_{1-3}$)alkil; i fenil($C_{1-3}$)alkil supstituisan sa 1-3 člana grupe koju čine $C_{1-8}$alkil, trifluorometil, nitro, dialkilamino i cijano;

$R_2$ je izabran iz grupe koju čine vodonik; okso; hidroksil; $C_{1-8}$ alkil; $C_{1-8}$alkoksi; $C_{3-6}$cikloalkil; i $C_{3-6}$ cikloalkoksi; i $R_4$ je vodonik; hidroksil; alkoksi; $C_{1-8}$alkil supstituisan sa 1-3 člana grupe koju čine $C_{1-8}$alkil, hidroksil, cijano, nitro i dialkilamino; svaki $R_8$ je nezavisno vodonik, $C_{1-4}$ alkil, $C_{3-6}$ cikloalkil, fenil ili benzil ili njegova farmaceutski prihvatljiva so.

Prijava sadrži još 8 zavisnih patentnih zahteva.

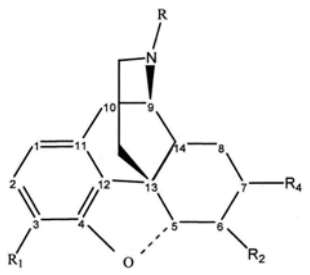

(III)

---

**(51)** ***C 07 D 513/04*** (2006.01) **(11) 51581**
***A 61 P 11/06*** (2006.01) **(13) B**
***A 61 P 9/10*** (2006.01)
***A 61 K 31/519*** (2006.01)
***A 61 P 25/00*** (2006.01)
(21) P-2011/0006 (22) 03.04.2006.
(30) SE 06.04.2005. 0500767
(86) WO 03.04.2006. PCT/SE2006/000399
(87) WO 12.10.2006. WO 2006/107258
(96) 03.04.2006. 06717078.7
(97) 10.11.2010. EP1869056B 2010/45 EN
**(54) NOVI 5-SUPSTITUISANI 7-AMINO-[1, 3]TIAZOLO[4, 5-D]PIRIMIDINSKI DERIVATI**
NOVEL 5-SUBSTITUTED 7-AMINO-[1, 3]THIAZOLO[4, 5-D]PYRIMIDINE DERIVATIVES
(73) ASTRAZENECA AB, 151 85 Södertälje, SE
(72) NORDVALL, Gunnar, AstraZeneca R & D Södertälje, S-151 85 Södertälje, SE; RAY, Colin, AstraZeneca R & D Södertälje, S-151 85 Södertälje, SE; REIN, Tobias, AstraZeneca R & D Södertälje, S-151 85 Södertälje, SE; SOHN, Daniel, AstraZeneca R & D Södertälje, S-151 85 Södertälje, SE
(74) RISTIĆ, Dragoslav i ost., Cara Lazara 7, 11000 Beograd, RS
(57) Jedinjenje, **naznačeno time**, daje predstavljeno sa formulom (I) $R^1$ predstavlja $CH_3$ ili $CH_3CH_2$;
$R^2$ predstavlja H, 2-F, 2-C1, 3-F, 3-$OCH_3$, 3-CN, 3-$CF_3$, 3-$CONH_2$ ili 3-$SO_2CH_3$;
$R^3$ predstavlja H ili $CH_3$;
$R^4$ predstavlja H ili $CH_3$; i
$R^5$ predstavlja H; ili gde $R^4$ je $CH_3$, $R^5$ predstavlja H ili F; i njegove farmaceutski prihvatljive soli.
Prijava sadrži još 17 zavisnih patentnih zahteva.

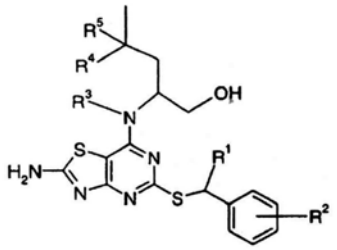

(I)

---

**(51)** ***C 12 N 9/68*** (2006.01) **(11) 51623**
**(13) B**
(21) P-2010/0473 (22) 21.04.2005.
(30) US 22.04.2004. 564472P
(86) WO 21.04.2005. PCT/US2005/013562
(87) WO 10.11.2005. WO 2005/105990
(96) 21.04.2005. 05737862.2
(97) 04.08.2010. EP1740698B 2010/31 EN
**(54) REKOMBINANTNO MODIFIKOVAN PLAZMIN**
RECOMBINANTLY MODIFIED PLASMIN
(73) TALECRIS BIOTHERAPEUTICS, INC., 4101 Research Commons, Suite 300 79 T.W. Alexander Drive, Research Triangle Park, NC 27709, US
(72) HUNT, Jennifer, Audrey, 8709 O`Neal Road, Raleigh, NC 27613, US; NOVOKHATNY, Valery, 4617 Wee Burn Trail, Raleigh, NC 27612, US
(74) POPOVIĆ, Slobodan i ost., Resavska 34, 11000 Beograd, RS
(57) Polinukleotid koji sadrži (obuhvata) sekvencu nukleotida koja kodira polipeptid koji ima pojedinačni N-terminalni kringl domen koji je najmanje 90% identičan kringl 1 domenu nativnog humanog plazminogena; i C-terminalni domen koji je najmanje 90% identičan mestu (položaju) aktiviranja i domenu serinske proteaze humanog plazminogena, pri čemu se ovaj polipeptid vezuje za imobilizovan lizin i može se aktivirati pomoću plazminogenskog aktivatora.
Prijava sadrži još 17 zavisnih patentnih zahteva.

---

**(51)** ***D 21 H 19/40*** (2006.01) **(11) 51611**
***D 21 H 19/84*** (2006.01) **(13) B**
***D 21 H 21/18*** (2006.01)
***D 21 H 19/82*** (2006.01)
***D 21 H 25/14*** (2006.01)
***D 21 H 21/52*** (2006.01)
(21) P-2010/0558 (22) 12.07.2006.
(30) EP 13.07.2005. 05106427
(86) WO 12.07.2006. PCT/EP2006/064143
(87) WO 18.01.2007. WO 2007/006794
(96) 12.07.2006. 06777722.7
(97) 03.11.2010. EP1907626B 2010/44 EN
**(54) OBLOŽENI PAPIR ZA OFSET ŠTAMPU**
COATED PAPER FOR OFFSET PRINTING
(73) SAPPI NETHERLANDS SERVICES B.V., Biesenweg 16, 6211 AA Maastricht, NL
(72) HAENEN, Jean-Pierre, Gascogne 8, NL-6245 PP Eysden, NL; RESCH, Peter, Schlosstrasse 1, A-8071 Vasoldsberg, AT; SCHOLTE, Bert, Karolingenstraat 5, NL-6132 GJ Sittard, NL
(74) PETOŠEVIĆ, Dušan, Kozjačka 15, 11000 Beograd, RS
(57) Korišćenje obloženih podloga za ofset štampanje je **naznačeno time**, što obloge, koje su u sastavu papirnog supstrata, sadrže slojeve (2, 3), i naznačeno time, što je obloga sastavljena od vršnog sloja (3) i opciono od najmanje jednog sekundarnog sloja (2) koji se nalazi ispod vršnog sloja (3), gde vršni sloj (3) i, ako postoji i sekundarni sloj (2), sadrže: deo pigmenta, koji je

naznačen time, što sadrži: 80 - 99 delova suve mase finih čestica nataloženog karbonata i/ili finih čestica zemljanog karbonata i/ili finih čestica kaolina i/ili finih čestica gline 1 do 25 delova suve mase finih čestica amorfnog silicijum dioksidnog gela i vezivni deo koji je naznačen time, što sadrži: 5-20 delova suve mase vezivnih materijala i najmanje 4 dela suve mase drugih dodataka.
Prijava sadrži još 39 zavisnih patentnih zahteva.

---

**(51)** ***E 02 B 3/00*** (2006.01) **(11) 51586**
***G 05 D 9/00*** (2006.01) **(13) B**
(21) P-2007/0090 (22) 05.03.2007.
(43) 22.01.2009.
**(54) UREĐAJ ZA REGULACIJU VODOSTAJA**
DEVICE FOR WATER-LEVEL CONTROL
(73) JOVIĆ, Vasilije, Radivoja Bogdanovića 50, 22203 Noćaj, RS
(72) JOVIĆ, Vasilije, Radivoja Bogdanovića 50, 22203 Noćaj, RS
(57) Уређај за регулацију водостаја **назначен тиме**, што се састоји од цеви (1) са лоптастим вентилима (3) на једном и другом крају, док је у средини на њој постављена спојна цев (2) „T" облика, при чему су на оба краја цеви (1) постављени и регулатори (4) нивоа са пловцима (5).

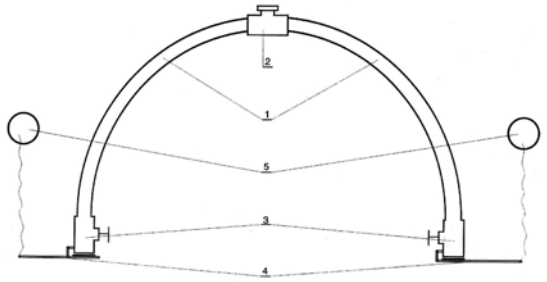


---

**(51)** ***E 02 D 29/02*** (2006.01) **(11) 51565**
***E 01 F 8/02*** (2006.01) **(13) B**
(21) P-2010/0398 (22) 10.08.2007.
(30) DE 30.08.2006. 202006013295U
(96) 10.08.2007. 07015745.8
(97) 09.06.2010. EP1895057B 2010/23 DE
**(54) KONTEJNER ZA PUNJENJE KAMENJEM**
CONTAINER FOR FILLING WITH STONES
(73) DRAHT CHRIST GMBH, Wachenheimer Strasse 9, 68309 Mannheim, DE
(72) LUY, Nadine, N2, 8, 68161 Mannheim, DE
(74) PAVLOVIĆ, Gordana i ost., Majke Jevrosime 53, 11000 Beograd, RS
(57) Kontejner za punjenje kamenjem, koji se sastoji od pletiva žica postavljenih uzdužno i poprečno jednih prema drugim pod pravim uglom i međusobno povezanih na njihovim krajevima, pri čemu je to pletivo načinjeno od jedne rešetke (1) koja je savijena četiri puta, **naznačen time**, što su horizontalni štapovi (11) na svojim završnim krajevima koji se susreću međusobno zavareni.
Prijava sadrži još 6 zavisnih patentnih zahteva.

---

**(51)** ***E 03 F 1/00*** (2006.01) **(11) 51617**
***E 03 F 5/10*** (2006.01) **(13) B**
(21) P-2011/0087 (22) 09.05.2008.
(30) NL 09.05.2007. 2000638
(86) WO 09.05.2008. PCT/NL2008/050282
(87) WO 20.11.2008. WO 2008/140310
(96) 09.05.2008. 08753765.0
(97) 12.01.2011. EP2155975B 2011/02 EN
**(54) UREĐAJ OBLIKA KUTIJE ZA ČUVANJE VODE, KAO ŠTO JE REZERVOAR ZA KIŠNICU, I POSTUPAK ZA NJEGOVU UPOTREBU**
BOX SHAPED DEVICE FOR HOLDING WATERS, SUCH AS A RAINWATER BOX, AND METHOD FOR USING THE SAME
(73) PIPELIFE NEDERLAND B.V., Flevolaan 7, 1601 MA Enkhuizen, NL
(72) HEOKSTRA, Hielke, Dolf, De Leijen 14, NL-8939 BC Leeuwarden, NL; KRUIJER, Martinus, Petrus, Hemelboog binnen 12, NL-1705 SM Heerhugowaard, NL; SCHOUTEN, Michael, Adrianus, Jacobus, Breitnerhof 147, NL-1628 XN Hoorn, NL
(74) POPOVIĆ, Srđa i ost., Takovska 19, 11000 Beograd, RS
(57) Uređaj oblika kutije za čuvanje vode, kao što je na primer rezervoar za kišnicu, koji sadrži najmanje četiri delimično otvorena bočna zida (1, 2), panel (3) koji se pruža između bočnih zidova (1, 2) i koji je pravougaonog oblika čija je širina jednaka polovini njegove dužine, gde bočni zidovi (1, 2) i panel (3) zatvaraju unutrašnji prostor (27) u kojem se može čuvati voda, gde su na unutrašnjosti panela (3) izvedeni stubovi (12, 13) koji se većim delom pružaju paralelno u odnosu na bočne zidove (1, 2), **naznačen time**, što panel (3) poseduje slobodan prolaz (11) koji je smešten u središtu jedne od dve kvadratne polovine (4, 5) panela (3) koje su određene pravougaonim oblikom, što se slobodan prolaz (11) završava u unutrašnjem prostoru (27) ograničenom bočnim zidovima (1, 2) i panelom (3), i u otvorenoj je komunikaciji sa unutrašnjim prostorom (27) i/ili formira deo unutrašnjeg prostora (27), i što je prolaz (11) okružen stubovima (12, 13) na takav način da je rastojanje između bilo kog para stubova koji okružuju prolaz (11) relativno veliko dok je rastojanje između svih ostalih parova stubova relativno malo.
Prijava sadrži još 14 zavisnih patentnih zahteva.

---

**(51)** ***E 04 C 2/04*** (2006.01) **(11) 51618**
***E 04 B 1/04*** (2006.01) **(13) B**
(21) P-2005/0961 (22) 02.07.2003.
(43) 31.12.2007.
(86) WO 02.07.2003. PCT/HR2003/00034
(87) WO 13.01.2005. WO 2005/003481

**(54) KOMPOZITNI NOSEĆI ZIDNI PANELI I PODOVI I GRADNJA SAMOPODUPRTIH ZGRADA VELIKOG RASPONA OD ISTIH**

CONSTRUCTING THE LARGE-SPAN SELF-BRACED BUILDINGS OF COMPOSITE LOAD-BEARING WALL-PANELS AND FLOORS

(73) MARA-INSTITUT D.O.O., Varaždinska 65, Martijanec, 42232 Donji Martijanec, HR

(72) SKENDZIC, Milovan, Hrvatskih pavlina 12, 42250 Lepoglava, HR; SMRCEK, Branko, Branimirova 24, 42202 Trnovec, HR

(74) PETOŠEVIĆ, Dušan, Kozjačka 15, 11000 Beograd, RS

(57) Kompozitni noseći zidni paneli i podovi za gradnju samopoduprtih zgrada velikog raspona uz korišćenje jedinice 13 krov-tavanica, **naznačeni time**, što obuhvataju dva sloja, široki sloj (2) i uzani sloj (3), koji su oba ojačani u suštini sa po dva sloja (5) mreže od čelične žice, koji su međusobno kontinualno povezani ćelom dužinom panela sa najmanje dva tanka rebra (4) od čelične trake tako da je prostor obrazovan između njih delimično popunjen toplotnim izolacionim slojem (10) koji prianja na unutrašnji betonski sloj dok se prostor (11) koristi kao vazdušna ventilacija što su rebra (4) učvršćena u oba betonska sloja preko čeličnih petljica (7) čvrsto spojenih duž njihovih ivica, pri čemu čelične petljice (7) imaju izvedene otvore (9) u koje se umeću kratki ankeri (8) u obliku kratkih čeličnih sipki radi održavanja odstojanja između slojeva žice kroz koje se provode dodatne uzdužne šipke (6) za ojačanje ili prednapregnute struke žice; što obuhvata oslonce za oslanjanje krovnih jedinica (13) sa pljosnatim podsvođem, sa ugrađenom čeličnom cevi (14) koja se pruža iznad njih, što su slojevi (2, 3) betona zadebljani kod oslonaca, za koje je cev (14) pričvršćena i čvrsto vezani, upravno na čelična rebra (4), da bi na taj način preneli opterećenje krova od čelične cevi (14) centrično na oba betonska sloja (2, 3), bez koncentracije naprezanja, pri čemu se spajanje izvodi pomoću dva vijka (50) na koje se navlači ploča podsvođa jedinice (13) krov-tavanica kroz dva otvora (49) i pričvršćuje navrtkama; i što obuhvata specijalne oslonce za oslanjanje podnih jedinica (29) unutar horizontalnog žleba (38) obrazovanog duž jednog prekida unutrašnjeg betonskog sloja koji povezuje čeličnu cev (14) ugrađenu u oba betonska slojaja (2, 3) sa čeličnim rebrima (4) koja prolaze pod pravim uglom u odnosu na cev (14), prolazeći kontinualno kroz žleb (38), pri čemu se veza krute podne jedinice (29) sa zidnim panelom (1) postiže spajanjem preklopljenih rebara (4) zidnog panela sa rebrima (32) podne jedinice pomoću vijaka (40) i navrtki žlebu (38) posle čega se žleb nalije betonom, pri čemu je donji element (31) podne jedinice bio prethodno oslonjen na cev (14) pri čemu su rebra (4) zidnog panela kliznula u proreze blizu rebara (4) tako da je po završenom spajanju dobijena prava spojna ivica i na gornjoj i na donjoj strani ostvarenog spoja, ne zahtevajući dalju obradu.

Prijava sadrži još 2 zavisna patentna zahteva.

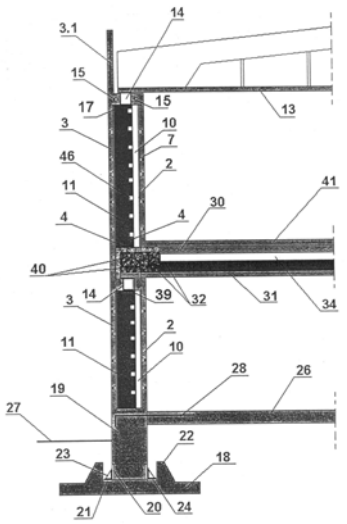


**(51)** ***E 04 F 17/02*** (2006.01) **(11) 51564**
**(13) B**

(21) P-2003/0704 (22) 20.12.2001.
(43) 03.03.2006.

(30) DE 09.03.2001. 101 11 469.9

(86) WO 20.12.2001. PCT/EP01/15154

(87) WO 19.09.2002. WO 02/072976

**(54) PRSTENASTI GRAĐEVINSKI BLOK ZA GLAVU DIMNJAKA**

ANNULAR BUILDING BLOCK FOR A CHIMNEY STACK

(73) SCHIEDEL GmbH & CO., Lerchenstrasse 9, 80995 München , DE

(72) BRAUNEIS, Robert, Karl-Stieler-Str. 50, 85757 Karlsfeld, DE

(74) MIKIJELJ, Rade i ost., Vlajkovićeva 28, 11000 Beograd, RS

(57) Prstenasti gradjevinski blok (10) za glavu dimnjaka čije su spoljne površine (12, 14, 16, 18) uglavnom pravougaonog oblika i čija je unutrašnja površina (20) uglavnom cilindričnog oblika, pri čemu se na gornjoj ivici (22) svake spoljne površine (14) nalazi udubljenje (24), a na donjoj ivici svake spoljne površine (14) jedno izbočenje (30) koje se ističe iz donje strane (28), tako da kod dva prstenasta gradjevinska bloka (10), postavljenih jedan iznad drugog, udubljenje (24) donjeg prstenastog gradjevinskog bloka (10), prima izbočenje (30) gornjeg prstenastog gradjevinskog bloka (10), **naznačen time**, da je izbočenje (30) u korenu šire nego na svom slobodnom kraju, da dubina udubljenja (24) raste od spoljne površine (14) ka gornjoj strani (34) prstenastog gradjevinskog bloka (10) i da je visina udubljenja (24) veća od visine izbočenja (30), tako da se izmedju dva prstenasta gradjevinska bloka (10) postavljena jedan iznad drugog na spoljnoj strani vidi žljeb.

Prijava sadrži još 4 zavisna patentna zahteva.

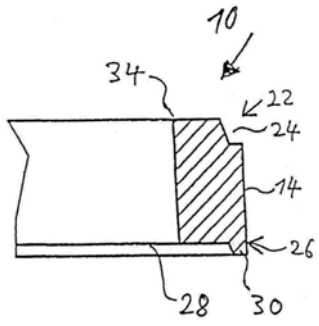


**(51)** ***E 05 F 11/04*** (2006.01) **(11) 51600**
**(13) B**
(21) P-2010/0562 (22) 31.01.2008.
(30) IT 01.02.2007. MC20070016
(96) 31.01.2008. 08101146.2
(97) 22.09.2010. EP1953320B 2010/38 EN
**(54) UREĐAJ ZA OTVARANJE I ZATVARANJE ZAKLOPNOG PROZORA**
DEVICE USED TO OPEN AND CLOSE VASISTAS WINDOWS
(73) CIRILLI, Alessandro, Via San Francesco, 56, 60035 Jesi (AN), IT
(72) CIRILLI, Alessandro, Via San Francesco, 56, 60035 Jesi (AN), IT
(74) PAVLOVIĆ, Gordana i ost., Majke Jevrosime 53, 11000 Beograd, RS
(57) Uređaj za otvaranje i zatvarenje zaklopnih prozora, vrste koja sadrži jedno kutijasto telo (C) u kome se nalazi brava (S), osovinica (1) spojena sa bravom (S) jedan jedini konopac (2) koji se koristi za otvaranje brave (S) i zatvaranje ploče (A) prozora (F), u kome se brava (S) sadrži:
- prvu osovinicu (3) koja se koristi za obrtanje jedne oscilatorne ploče (4) koja ima kuku (4b) i povezana je sa povratnom oprugom (11);
- drugu osovincu (5) koja se koristi da obrne polugu (7) povezanu sa povratnom oprugom (14) i sa kvakom (6) povezanom sa povratnom oprugom (6a) pojektovanom da se poveže sa jednim krilom (4c) ploče (4); pri čemu je uređaj **naznačen time**, - stoje poluga (7) povezana sa elastičim sečivom (8) koje se završava sa nosačem (8c) i ima jedan donji spojni klin (8a) umetnut kroz prorez (7f) poluge (7) i kroz rupu (6c) načinjenu na kvaki (6);
- što se konopac(2) pomera oslanjanjem na osovinicu (1) i aktivira neposredno polugu (7);
- što oscilatorna ploča (4) ima jedan isturen zubac (4e) koji se meša sa nosačem (8c) samo na kraju otvranja oscilirajuće ploče (4), određujući savijanje na gore nosača (8c) što čini da se klin (8a) izvuče iz rupe (6c) na kvaki (6), prekidajući vezu između poluge (7) i kvake (6).
Prijava sadrži još 4 zavisna patentna zahteva.

**(51)** ***F 01 B 13/02*** (2006.01) **(11) 51597**
***F 04 C 18/48*** (2006.01) **(13) B**
(21) P-2006/0047 (22) 24.01.2006.
(43) 07.08.2008.
**(54) ELIPTIČNO-ROTACIONI KOMPRESOR**
ELLIPTICAL ROTARY COMPRESSOR
(73) JURIŠIĆ, Vojislav, Braće Savić 3, 11273 Batajnica, RS; JANJIĆ, Mirko, Cetinjska 28, 11000 Beograd, RS
(72) JURIŠIĆ, Vojislav, Braće Savić 3, 11273 Batajnica, RS; JANJIĆ, Mirko, Cetinjska 28, 11000 Beograd, RS
(57) Eliptično rotacioni kompresor, sa dva radna ciklusa za jedan obrt, sa različitim vremenskim trajanjem radnih taktova, **naznačen time**, što sadrži:
(a) kompresorsko kućište (1) cilindrično prstenastog oblika; kompresorsko kućište (1) dalje sadrži: najmanje dva usisna otvora (16); najmanje dva otvora (14) za nepovratni ventil; rashladne komore (20); gde najmanje dva usisna otvora (16) i najmanje dva otvora (14) za nepovratni ventil su postavljeni po obimu kompresorskog kućišta (1) u vertikalnoj ravni simetrije, jedni u odnosu na druge na rastojanju u odnosu na početnu poziciju kompresorskog mehanizma i saglasno kinematsko-geometrijskim karakteristikama;
(b) unutrašnje smešten cilindrični rotor (2) se obrće unutar kompresorskog kućišta (1); dok unutrašnje postavljen cilindrični rotor (2) dalje sadrži: spojnu osovinu (9); oscilujuću polugu (8); klipnjaču (7); satelit zupčanike (12); oscilujuće ležajne prstenove (13); otvore (22, 23) u unutrašnje postavljenom cilindričnom rotoru (2); vratila (17, 19); i radijalno postavljen radni cilindar (3) koji u svojim zidovima ima najmanje dva otvora (15) za prestrujavanje vazduha; radijalno postavljen radni cilindar (3) dalje sadrži: klip (6) koji ima podužnu osu normalnu na osu centra eliptično rotacionog kompresora; pri čemu je klip (6) postavljen unutar radijalno postavljenog radnog cilindra (3) spojen sa klipnjačom (7); radnog cilindra kapa (4) ima sa donje strane zaravnjenu površinu i prstenastog oblika žleb, je postavljena na gornjoj strani radijalno postavljenog radnog cilindra (3) za zatvaranje radijalno postavljenog radnog cilindra (3) i ima zaptivne žlebove (5) na svojoj gornjoj površini i u njima zaptivače da spreči curenje vazduha; i ima zaptivni žleb (25) na bočnoj unutrašnjoj strani i u njemu zaptivač da spreči curenje vazduha; gde radnog cilindra kapa (4) ima gornju površinu oblika cilindra čiji je radijus istovetan sa radijusom unutrašnje postavljenog cilindričnog rotora (2), i u svojoj vertikalnoj osi, koja je saosna sa podužnom osom radijalno postavljenog radnog cilindra (3), ima otvor u sredini radijalno postavljenog radnog cilindra (3); gde klip (6) svojim oblikom čela je saglasan sa unutrašnjim oblikom radnog cilindra kape (4), ima najmanje jedan žleb za klipni prsten i pomera se ciklično dok se unutrašnje postavljen cilindrični rotor (2) obrće; gde unutrašnje postavljen cilindrični rotor (2), koji je cilindričnog oblika, ima otvor na gornjem delu da primi radijalno postavljen radni cilindar (3) čija podužna osa je normalna na podužnu osu unutrašnje postavljenog cilindričnog rotora (2), i otvore sa leve i desne strane radijalno postavljenog radnog cilindra (3) za hlađenje; i ima

otvor na donjem delu unutrašnje postavljenog cilindričnog rotora (2) za smeštaj satelit zupčanika (12), spoj ne osovine (9), oscilujuće poluge (8) i klipnjače (7); i ima najmanje jedan otvor (24) za dopunjavanje vazduhom koji povezuje njegovu gornju i donju stranu; i gde na gornjoj strani otvora za radijalno postavljen radni cilindar (3) ima, normalno na osu radijalno postavljenog radnog cilindra (3), zaravnjenu površinu za smeštaj radnog cilindra kape (4) da zatvori radijalno postavljen radni cilndar (3);
(c) unutrašnje ozubljene zupčanike (11) koji su na bočnim stranama kompresorskog kućišta (1); gde spojna osovina (9) spojena sa oscilujućom polugom (8) i klipnjačom (7), je postavljena u otvor u donjem delu u unutrašnje postavljenom cilindričnom rotoru (2), ispod radijalno postavljenog radnog cilindra (3); gde spojna osovina (9) je sa oba kraja spojena, sa satelit zupčanicima (12) tako da svaka tačka na podužnoj osi spoj ne osovine (9) tokom obrtanja unutrašnje postavljenog cilindričnog rotora (2) se pomera ciklično duž zamišljene zatvorene krive linije elipse definišući način promene zapremine radnog prostora radijalno postavljenog radnog cilindra (3) u zavisnosti od promene ugla obrtanja unutrašnje postavljenog cilindričnog rotora (2); gde klipnjača (7) i oscilujuća poluga (8) su spojene preko igličastih ležajeva sa centralnim delom spojne osovine (9); gde oscilujuća poluga (8) je uzengijom spojena sa spojnom osovinom (9) sa leve i desne strane klipnjače (7) na jednom kraju, i oscilujuća poluga (8) na drugom kraju ima osovinicu (10) spojenu sa otvorom (22) na unutrašnje postavljenom cilindričnom rotoru (2); gde rastojanje između centara otvora oscilujuće poluge (8) definiše nagib zamišljene elipse, promenu zapremine radnog prostora radijalno postavljenog radnog cilindra (3), različito trajanje radnih taktova i istovremeno definiše početnu poziciju kompresorskog mehanizma; gde satelit zupčanici (12) su smešteni u donjem delu otvora unutrašnje postavljenog cilindričnog rotora (2) gde satelit zupčanici (12) imaju sa spoljnih strana otvor postavljen izvan njihovih centara a naspram ose profila zuba njihovog ozubljenja, gde pozicija otvora definiše zapreminu radnog prostora eliptično rotacionog kompresora i gde otvori služe za međusobnu vezu satelit zupčanika (12) preko spojne osovine (9) tako da satelit zupčanici (12) su paralelno spojeni u položaju jedan prema drugom kao slika u ogledalu, na međusobnom rastojanju koje je dovoljno za smeštaj oscilujuće poluge (8) i klipnjače (7); gde satelit zupčanici (12) imaju u centrima bočnih strana otvore prilagođene za oslanjanje na rukavce (27) oscilujućih ležajnih prstenova (13) gde oscilujući ležaj ni prstenovi (13) omogućuju obrtanje satelit zupčanika (12) oko sopstvenih osa i definišu kretanje satelit zupčanika (12) tokom rotacije unutrašnje postavljenog cilindričnog rotora (2); gde satelit zupčanici (12) ciklično osciluju u odnosu na obrtanje podužne ose radijalno postavljenog radnog cilindra (3) i definišu poziciju unutrašnje postavljenog cilindričnog rotora (2) i radijalno postavljenog radnog cilindra (3) i definišu dužinu hoda klipa (6) u odnosu na kompresorsko kućište (1); gde vratila (17, 19) unutrašnje postavljenog cilindričnog rotora (2) su sa bočnih strana radijalno postavljenog radnog cilindra (3) saosna sa podužnom osom unutrašnje postavljenog cilindričnog rotora (2) i čine integralnu celinu sa unutrašnje postavljenim cilindričnim rotorom (2); gde otvori (22, 23) na unutrašnje postavljenom cilindričnom rotoru (2) imaju poziciju u odnosu na centar rotacije da definišu način promene zapremine u radijalno postavljenom radnom cilindru (3) tokom radnog ciklusa i gde unutrašnje ozubljeni zupčanici (11) su uzubljeni u odnosu i = 2 sa satelit zupčanicima (12) da definišu kinematsko-geometrijske karakteristike kompresorskog mehanizma; i
(d) poklopce (18); gde oscilujući ležajni prstenovi (13) imaju oblik prstena sa unutrašnjim prečnikom za postavljanje na poklopce (18); gde rukavci (27) su u odnosu na centar oscilujućih ležajnih prstenova (13) pozicionirani na rastojanju koji odgovara polovini osnovnog prečnika satelit zupčanika (12); gde podužna osa oscilujućih ležajnih prstenova (13) je paralelna sa osom rukavaca (27) koji nose satelit zupčanike (12) i obezbeđuju istovremeno rotaciono i oscilujuće kretanje; gde poklopci (18) u centrima imaju otvore za ležajeve (21) vratila (17) i vratila (19) unutrašnje postavljenog cilindričnog rotora (2); gde poklopci (18) sa unutrašnje strane imaju glavčine za smeštaj oscilujućih ležajnih prstenova (13) da definišu kružnu putanju satelit zupčanika (12).
Prijava sadrži još 1 zavisni patentni zahtev.

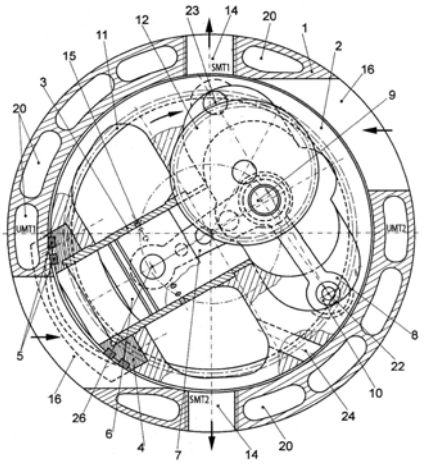


**(51)** ***F 04 D 7/04*** (2006.01) **(11) 51593**
***F 04 D 29/04*** (2006.01) **(13) B**
***F 04 D 15/00*** (2006.01)
***F 04 D 29/16*** (2006.01)
(21) P-2011/0086 (22) 05.06.2006.
(30) SE 01.07.2005. 0501542
(86) WO 05.06.2006. PCT/SE2006/000662
(87) WO 11.01.2007. WO 2007/004943
(96) 05.06.2006. 06747856.0
(97) 24.11.2010. EP1899609B 2010/47 EN
**(54) PUMPA**
A PUMP

(73) ITT MANUFACTURING ENTERPRISES, INC., Suite 1217, 1105 North Market Street, Wilmington, Delaware 19801, US
(72) ANDERSSON, Patrik, Vårvägen 1, S-114 52 Skogås, SE
(74) POPOVIĆ, Srđa i ost., Takovska 19, 11000 Beograd, RS
(57) Pumpa za pumpanje kontaminirane tečnosti u kojoj se nalaze čvrste materije, koja sadrži kućište pumpe sa rotirajućim impelerom (1) postavljenim na pogonskoj osovini (3) i sa najmanje jednom lopaticom (5), ležištem (2) impelera, gde se najmanje jedan deo impelera (1) i ležište (2) impelera tokom rada pumpe mogu pokretati u osnom pravcu relativno jedno u odnosu na drugo, **naznačena time**, što ležište (2) impelera poseduje najmanje jedan žljeb (10) izveden u svojoj gornjoj površini (9).
Prijava sadrži još 11 zavisnih patentnih zahteva.

---

**(51)** ***F 04 D 7/04*** (2006.01) **(11) 51594**
***F 04 D 29/22*** (2006.01) **(13) B**
(21) P-2011/0094 (22) 05.06.2006.
(30) SE 17.06.2005. 0501382
(86) WO 05.06.2006. PCT/SE2006/000663
(87) WO 21.12.2006. WO 2006/135304
(96) 05.06.2006. 06747857.8
(97) 12.01.2011. EP1891331B 2011/2 EN
**(54) PUMPA**
A PUMP
(73) ITT MANUFACTURING ENTERPRISES, INC., Suite 1217, 1105 North Market Street, Wilmington, Delaware 19801, US
(72) ANDERSSON, Patrik, Vårvägen 1, S-114 52 Skogås, SE
(74) POPOVIĆ, Srđa i ost., Takovska 19, 11000 Beograd, RS
(57) Pumpa za pumpanje kontaminirane tečnosti u kojoj su prisutne čvrste materije, koja sadrži kućište (2) pumpe sa rotirajućim impelerom (3) sa najmanje jednom lopaticom (9) i ležište (4) impelera, gde ležište (4) impelera poseduje najmanje jedan žljeb (13) izveden na njegovoj gornjoj površini (11), gde se proces sečenja/kidanja dešava između sečiva (15) opisanog žljeba (13) i donje ivice (14) lopatice (9) kako impeler (3) rotira relativno u odnosu na ležište (4) impelera, **naznačena time**, što pumpa (1) takođe sadrži sredstva za vođenje čvrste materije prema žljebu (13), gde sredstva za vođenje sadrže najmanje jedan klizač (18) i najmanje jedno proširenje (20), što se gornja površina (19) klizača (18) pruža od proširenja koje se nalazi najviše u unutrašnjosti lopatice (9) impelera (3) prema ležištu (4) impelera, i gde se proširenje (20) pruža prema gornjoj površini (4) ležišta impelera.
Prijava sadrži još 13 zavisnih patentnih zahteva.

**(51)** ***F 42 B 30/02*** (2006.01) **(11) 51625**
**(13) B**
(21) P-2011/0048 (22) 13.02.2006.
(30) CH 16.02.2005. 270052005
(86) WO 13.02.2006. PCT/CH2006/000093
(87) WO 24.08.2006. WO 2006/086902
(96) 13.02.2006. 06704542.7
(97) 10.11.2010. EP1851503B 2010/45 DE
**(54) PROJEKTIL**
BULLET
(73) SALTECH AG, Obere Ey 6, 4657 Dulliken, CH
(72) SALVEL, Manuel, F., Irchelstrasse 32, CH-8200 Schaffhausen, CH
(74) PETOŠEVIĆ, L. Dušan, Kozjačka 15, 11000 Beograd, RS
(57) Projektil (10), koji sadrži jezgro sa prednje (1) i sa zadnje (2) strane, **naznačen time**, što spoljašnji izgled (3) projektila (10), kada se projektil gleda sa vrha (4), ima zašiljen oblik i nastavlja se na cilindrični srednji region (5) koji se završava konusnim zadnjim delom (6), i naznačen time, što se jezgro sa zadnje strane (2) montira u pozitivnom smeru centrirano u odnosu na jezgro sa prednje strane (1), pri čemu jezgro sa zadnje (2) strane naleže (ispunjava rupu) koju čine cilindrični i konusni region jezgra sa zadnje (2) strane projektila (10), i naznačen time, što su oba jezgra (1, 2) spojena kontaktnim zonama (11, 12) koja se nalaze u sklopu jezgara (1, 2), pri čemu su kontaktne zone tako sačinjene da se obezbeđuje dovoljan otpor gravitacionoj sili prilikom ispaljivanja projektila (10) koji je perfektno centriran gde se vršne strane (15, 13, 11 i 12) jezgara (1, 2) direktno dodiruju tako da nema procepa kao ni vazduha unutar projektila (10).
Prijava sadrži još 8 zavisnih patentnih zahteva.

---

**(51)** ***G 01 N 17/00*** (2006.01) **(11) 51609**
***G 01 N 17/04*** (2006.01) **(13) B**
(21) P-2011/0059 (22) 19.01.2009.
(30) EP 17.01.2008. 08100573
(96) 19.01.2009. 09150884.6
(97) 05.01.2011. EP2081009B 2011/1 FR
**(54) UREĐAJ ZA DETEKCIJU KOROZIJE**
APPARATUS FOR CORROSION DETECTION
(73) SERCAL BELGIUM, Bredabaan 839, 2170 Marksem, BE
(72) WILLEMEN, Karl, Bredabaan 839, B-2170, Merksem, BE; CARPENTIERS, Philippe, Chemin du Mont Sarah 30, B-7800, Ath, BE
(74) PLAVŠA, Drago i ost., Strumička 51, 11050 Beograd, RS
(57) Uređaj za detekciju prisustva korozije i/ili merenje korozije na najmanje jednoj pretežno metalnoj strukturi unutar koje se nalazi fluid, pri čemu pomenuti uređaj sadrži: - osnovno telo (1) koje sadrži zaptivni zid (7) za fluid koji razdvaja unutrašnju površinu osnovnog tela od spoljašnje površine, - sondu (6) koja ima oblik metalne Ijuspe (6) napravljene od metala istih svojstava kao i metalna struktura, koja je smeštena na strani pomenute

spoljašnje površine i prilagođena je da bude uronjena u fluid i da korodira, te da na taj način izgubi bar deo svoje mase, - blizinski senzor (5, 3, 4; 5, 10; 5, 14) koji je smešten na strani pomenute unutrašnje površine osnovnog tela (1) i odvojen je od pomenute sonde (6) zidom (7), pri čemu je pomenuti blizinski senzor prilagođen za interakciju sa metalnom Ijuspom (6) sve dok masa zadnje pomenute ne padne ispod kritične veličine koja odgovara unapred određenom graničnom nivou korozije.
Prijava sadrži još 14 zavisnih patentnih zahteva.

---

**(51)** ***G 01 N 21/35*** (2006.01) **(11) 51628**
**(13) B**
(21) P-2011/0089 (22) 23.05.2008.
(30) EP 15.06.2007. 07252448
(86) WO 23.05.2008. PCT/GB2008/001778
(87) WO 18.12.2008. WO 2008/152351
(96) 23.05.2008. 08750693.7
(97) 01.12.2010. EP2158472B 2010/48 EN
**(54) POSTUPAK ZA NEPOSREDNU ANALIZU ISPARLJIVE FAZE PROCESNE STRUJE**
A METHOD FOR THE ONLINE ANALYSIS OF A VAPOUR PHASE PROCESS STREAM
(73) BP CHEMICALS LIMITED, Chertsey Road, Sunbury-on-Thames, Middlesex TW16 7BP, GB
(72) LIGHTOWLERS, David, 6 Baxtergate Hedon, Hull, East Yorkshire HU12 8JN, GB; THOMSON, Alasdair, Iain, 11 St Mary's Close Elloughton, Hull, East Yorkshire HU15 1JF, GB
(74) JANKOVIĆ, Ivan i ost., Vlajkovićeva 28, 11000 Beograd, RS
(57) Postupak za neposrednu ('on-line') analizu procesne struje koja je za napajanje ili je izlazna struja iz parne peći, gde procesna struja ima temperaturu koja je bar 200°C, komponente procesne struje su u isparljivoj fazi, a postupak se sastoji od:
(a) uzimanja dela vazdušne struje iz procesne struje;
(b) hlađenje vazdušne struje do temperature koje je iznad tačke rošenja;
(c) analiziranje ohlađene vazdušne štuje bliskom infracrvenom (NIR) spektroskopijom da bi se dobio spektar koji karakteriše NIR-apsorbujuće komponente procesne struje; i (d) upoređivanje dobijenog spektra sa ustanovljenim kalibracionim modelima NIR spektroskopije korišćenjem hemometrisjkih tehnika za određivanje koncentracije i/ili za određivanje parcijalnog pritiska jedne ili više NIR- apsorbujućih komponenti procesne struje.
Prijava sadrži još 20 zavisnih patentnih zahteva.

---

**(51)** ***G 08 B 25/00*** (2006.01) **(11) 51619**
***G 06 F 19/00*** (2006.01) **(13) B**
(21) P-2010/0018 (22) 18.01.2010.
(43) 31.10.2010.
**(54) INTEGRISANI SISTEM ZA DOJAVU AKCIDENTNIH SITUACIJA**
INTEGRATED SYSTEM FOR ACCIDENT REPORTING
(73) ZESIUM MOBILE D.O.O. ZA PROIZVODNJU KOMUNIKACIONOG SOFTVERA I HARDVERA, Valentina Vodnika 8/9, 21000 Novi Sad, RS
(72) ŠENK, Vojin, Bulevar Mihajla Pupina 18, 21000 Novi Sad, RS; MILJEVIĆ, Duško, Sterijina 18, 21000 Novi Sad, RS; ĐORĐIĆ, Srđan, Nova IV 2, 21410 Futog, RS; POPOVIĆ, Dejan, Laze Kostića 7, 25000 Sombor, RS; MILIĆ, Darko, mr., Rade Stanišića 58, 21220 Bečej, RS
(74) MARKOVIĆ, Miodrag, Njegoševa 72, 11000 Beograd, RS
(57) Integrisani sistem za dojavu akcidentnih situacija/koji se sastoji od opreme za prikupljanje informacija (1) raspoređene na različitim lokacijama, koja je preko panela za prikupljanje informacija (2) povezana sa udaljenim računalima (3), **naznačen time** što udaljeni računari (3) preko radio modema (4) i antena (5) šalju poruke ka centralnoj anteni (6) odakle se preko radio modema (7) te poruke šalju prema serverskom delu sistema koji se nalazi u komandnom centru jedinice za odgovor na akcidentnu situaciju i koji se sastoji od najmanje komunikacionog servera (8), servera baze podataka (9) i VPN rutera smeštenih u zajedničkom ormanu sa elementima napajanja, hlađenja i rezervnog napajanja, pri čemu se poruke obrađuju u komunikacionom serveru (8) i tako obrađene prosleđuju ka serveru baze podataka (9) koji ima inspektorsku aplikaciju (10) i administrativnu aplikaciju (11), a koji je povezan sa najmanje jednim uređajem za štampanje (13) i jedinicom displeja (12), a razmena poruka između udaljenih računara (3) i komunikacionog servera ( 8) odvija se u vremenskom multipleksu, po slotovima jednake dužine koji su jednaki vremenu potrebnom za prenos poruke od 880 bitova (110 jednobajtnih reči) između komunikacionog servera 8 i udaljenog računara (3), pri čemu se ta razmena poruka obavlja po kanalu širine 25 KHz, na frekvenciji noseće učestanosti 405 -470 MHz, sa bitskom brzinom od najmanje 2400 bita u sekundi, a za svaki komunikacioni server (8) koristi se jedna stalna frekvencija u navedenom radnom opsegu i širini.
Prijava sadrži još 7 patentnih zahteva.

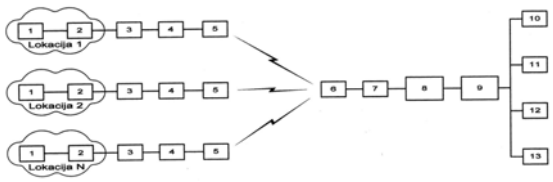


---

**(51)** ***H 02 J 7/00*** (2006.01) **(11) 51588**
***H 02 J 7/04*** (2006.01) **(13) B**
(21) P-2008/0001 (22) 04.01.2008.
(43) 08.09.2009.
**(54) REGULATOR PUNJENJA BATERIJE I NAPONA POTROŠAČA**
BATTERY CHARGING AND CONSUMER VOLTAGE REGULATOR

(73) JELIĆ, Savo, Nevesinjska 2, 11000 Beograd, RS
(72) JELIĆ, Savo, Nevesinjska 2, 11000 Beograd, RS
(57) Regulator punjenja baterija i napajanja potrošača **naznačen time**, što je i redna veza pobudnog namotaja (Zpob) i izvrsnog elementa inteligentnog, svestrano zaštićenog tranzistora (17) priključena na indukt generatora G, a upravljački i dijagnostički priključak tog tranzistora na mikroračunar (14), na čije se analogne ulaze, i preko prilagodnih kola, uvode podaci o stvarnim vrednostima struja i napona generatora i baterije i informacija o temperaturi elektrolita baterije, na osnovu koje se programski formira, a preko izvršnog elementa ostvaruje zakon optimalnog punjenja baterija.
Prijava sadrži još 3 zavisna patentna zahteva.

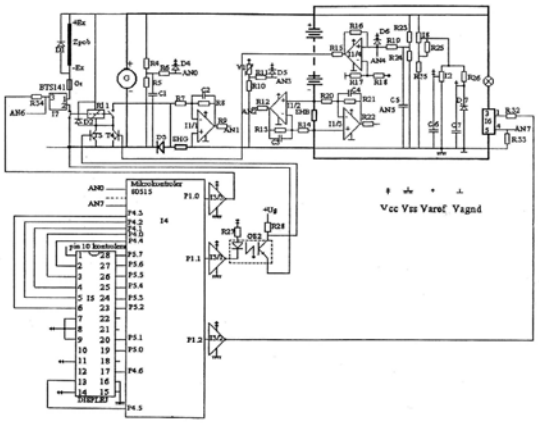

**(51)** ***H 04 S 3/00*** (2007.01) **(11) 51598**
**(13) B**
(21) P-2006/0522 (22) 18.01.2006.
(43) 08.09.2009.
(30) YU 18.01.2006. MP-2006/0004
**(54) VIŠEKANALNI DODIRNI AUDIO RUTER**
MULTI-CHANNEL TOUCH AUDIO ROUTER
(73) DINIĆ, Dimitrije, Braće Grim 22, 11000 Beograd, RS
(72) DINIĆ, Dimitrije, Braće Grim 22, 11000 Beograd, RS
(57) Višekanalni dodirni audio ruter namenjen je izvodjenju prostornih zvučnih efekata (eng. Surround sound effects), korišćenjem višekanalnih audio izlaza (1,N) i prostornog rasporeda više zvučnika oko slušalaca, karakterisan time što se sastoji od N dodirnih senzora (s1,sN), povezanih na N upravljačkih audio blokova (al,aN) konfigurisanih tako da omoguće upravljanje jačinom zajedničkog ulaznog audio signala (AU), pri čemu je svaki dodirni senzor (s1,sN) direktno vezan na samo jedan odgovarajući upravljački audio blok (a1,aN) povezan samo najedan odgovarajući audio izlaz (1,N).
Prijava sadrži još 1 zavisni patentni zahtev.

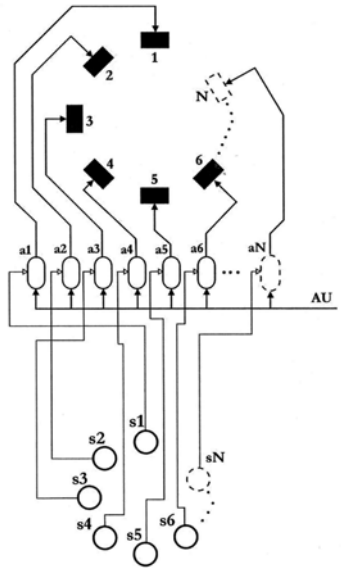


**(51)** ***H 04 W 36/36*** (2009.01) **(11) 51577**
**(13) B**
(21) P-2011/0001 (22) 12.07.2006.
(30) DE 21.07.2005. 102005034750
DE 21.07.2005. 102005034760
DE 01.08.2005. 102005036583
(86) WO 12.07.2006. PCT/DE2006/001203
(87) WO 25.01.2007. WO 2007/009433
(96) 12.07.2006. 06761789.4
(97) 06.10.2010. EP1905261B 2010/40 DE
**(54) POSTUPAK I SISTEM ZA OPTIMIZACIJU OPERATIVNOG VREMENA I PERFORMANSI PRI REIZBORU ĆELIJE KOD MOBILNIH TERMINALA**
OPTIMISING THE OPERATIONAL TIMES AND CELL CHANGE PERFORMACE OF MOBILE TERMINALS
(73) T-MOBILE INTERNATIONAL AG, Landgrabenweg 151, 53227 Bonn, DE
(72) KLATT, Axel, Zum Engelshof 41, 50996 Köln, DE
(74) ŽIVKO MIJATOVIĆ AND PARTNERS, Takovska 58, 11000 Beograd, RS
(57) Postupak za optimizaciju operativnih vremena i performansi pri reizboru ćelije mobilnih terminala u mobilnim komunikacionim mrežama sa susednim ćelijama, pri čemu mobilni terminal tokom rada u mobilnoj komunikacionoj mreži privremeno čuva specifične mrežne identifikacije nepogodnih susednih ćelija i koristi ih pri reizboru ćelije u kriterijumima za odlučivanje, **naznačen time** što mobilni terminal blokira radio merenja i procedure identifikovanja ćelija koje nisu pogodne kao kandidati za reizbor ćelija, čime se smanjuje broj merenja koja mobilni terminal treba da izvrši tokom rada.
Prijava sadrži još 11 patentnih zahteva.

## ИСПРАВКЕ

**1.** **I** Извршити исправку грешке, у решењу о признању патента бр. RS/2010/8414-П-2007/0056 (51348) од 21.09.2010. године, тако што ће се у редоследу и подацима подносилаца пријаве одн. редоследу и подацима проналазача, уместо погрешно наведеног:

КЛИМЕНТ Дардан, Војковачка 7, 36300 Нови Пазар, RS
РАДОСАВЉЕВИЋ Јордан, Карађорђева бб, 36219 Лешак, RS
ЈЕВТИЋ Мирољуб, Милана Миљковића 42/7, 19000 Зајечар, RS
ТОДОРОВИЋ Андреја, Лоле Рибара 17/8, 38250 Косовска Митровица, RS

**Исправити податке и уписати тачан редослед, који гласи**:

ЈЕВТИЋ Мирољуб, Милана Миљковића 42/7, 19000 Зајечар, RS
ТОДОРОВИЋ Андреја, Лоле Рибара 17/8, 38220 Косовска Митровица, RS
КЛИМЕНТА Дардан, Војковачка 7, 36300 Нови Пазар, RS
РАДОСАВЉЕВИЋ Јордан, Карађорђева бб, 36219 Лешак, RS

**2.** **I** Извршити исправку грешке, у решењу о признању патента бр. RS/2010/9832-П-2005/0056 (51441) од 01.11.2010. године, тако што ће се уместо погрешно наведене адресе другог носиоца права: „Vivenotgasse 10, 1010 Wien“, уписати тачан податак који гласи:

„**Vivenotgasse 10, 1120 Wien**“

**II** Извршити исправку и у коду (86) уместо погрешног наведеног броја PCT/EP 1003/007936 уписати тачан податак који гласи:

PCT/EP 2003/007936

# ИНДЕКСНЕ ТАБЕЛЕ ЗА ПАТЕНТЕ
# INDEX TABLES FOR PATENTS


- **ИНДЕКС НОСИЛАЦА ПАТЕНАТА (стр. 2333)**
- PATENT OWNER INDEX (p. 2333)

- **ИНДЕКС БРОЈЕВА ПАТЕНАТА (стр. 2341)**
- PATENT NUMBER INDEX (p. 2341)

- **ИНДЕКС БРОЈЕВА ПАТЕНАТА ПРЕМА МКП (стр.2344 )**
- INDEX OF PATENTS ACCORDING TO IPC (p. 2344)

## ИНДЕКС НОСИЛАЦА ПАТЕНАТА

PATENT OWNER INDEX

| (73) | (51) | (21) | (30) | (11) |
|---|---|---|---|---|
| APM Terminals Management B.V. | ***B 65 G 63/00*** (2006.01)<br>***B 66 C 19/00*** (2006.01) | P-2010/0509 | (30) EP 17.11.2006. 06388062<br>(86) WO 19.11.2007. PCT/EP2007/009987<br>(87) WO 22.05.2008. WO 2008/058763<br>(96) 19.11.2007. 07819863.7<br>(97) 25.08.2010. EP2089301B 2010/34 EN | 51595 |
| ASTRAZENECA AB | ***C 07 D 417/08***(2006.01) | P-2011/0045 | (30) US 12.06.2007. 943440P<br>(86) WO 11.06.2008. PCT/GB2008/050431<br>(87) WO 18.12.2008. WO 2008/152418<br>(96) 11.06.2008. 08762541.4<br>(97) 17.11.2010. EP2158199B 2010/46 EN | 51566 |
| ASTRAZENECA AB | ***C 07 D 513/04*** (2006.01)<br>***A 61 P 11/06*** (2006.01)<br>***A 61 P 9/10*** (2006.01)<br>***A 61 K 31/519*** (2006.01)<br>***A 61 P 25/00*** (2006.01) | P-2011/0006 | (30) SE 06.04.2005. 0500767<br>(86) WO 03.04.2006. PCT/SE2006/000399<br>(87) WO 12.10.2006. WO 2006/107258<br>(96) 03.04.2006. 06717078.7<br>(97) 10.11.2010. EP1869056B 2010/45 EN | 51581 |
| AVENTIS PHARMA S.A. | ***A 61 P 31/04*** (2006.01)<br>***A 61 K 9/20*** (2006.01)<br>***A 61 K 31/704*** (2006.01) | P-2011/0038 | (30) FR 25.02.2005. 0501936<br>(86) WO 23.02.2006. PCT/FR2006/000411<br>(87) WO 31.08.2006. WO 2006/090067<br>(96) 23.02.2006. 06725981.2<br>(97) 03.11.2010. EP1855695B 2010/44 FR | 51578 |
| BASF SE | ***C 07 D 401/04*** (2006.01)<br>***C 07 D 405/14*** (2006.01)<br>***A 01 N 43/707*** (2006.01)<br>***C 07 D 401/14*** (2006.01)<br>***C 07 D 409/14*** (2006.01) | P-2011/0050 | (30) EP 12.04.2006. 06007743<br>(86) WO 11.04.2007. PCT/EP2007/053515<br>(87) WO 18.10.2007. WO 2007/116078<br>(96) 11.04.2007. 07727983.4<br>(97) 29.12.2010. EP2010514B 2010/52 DE | 51622 |
| BERLIN-CHEMIE AG | ***A 61 K 9/08*** (2006.01)<br>***A 61 K 31/7072***(2006.01)<br>***A 61 K 47/32*** (2006.01)<br>***A 61 P 27/02*** (2006.01) | P-2011/0016 | (30) DE 29.09.2005. 102005046769<br>(86) WO 27.09.2006. PCT/EP2006/009383<br>(87) WO 12.04.2007. WO 2007/039201<br>(96) 27.09.2006. 06805904.7<br>(97) 24.11.2010. EP1940353B 2010/47 EN | 51615 |
| BIOGEN IDEC MA INC. | ***A 61 K 39/395*** (2006.01)<br>***C 07 K 16/00*** (2006.01)<br>***C 07 K 16/18*** (2006.01)<br>***C 07 K 16/30*** (2006.01)<br>***C 07 K 16/46*** (2006.01) | P-2003/0849 | (30) US 26.04.2001. 60/286,782<br>US 17.05.2001. 60/293,020<br>US 26.06.2001. 60/301,091<br>US 22.03.2002. 60/367,002<br>(86) WO 17.04.2002. PCT/US02/11950<br>(87) WO 07.11.2002. WO 02/088170 | 51635 |
| BIOGEN IDEC MA, INC. and APOTECH R & D, S.A. | ***A 61 K 38/17*** (2006.01) | P-2002/0253 | (30) US 06.10.1999. 60/157,933<br>US 11.02.2000. 60/181,807<br>US 30.06.2000. 60/215,688<br>(86) WO 05.10.2000. PCT/US00/27579<br>(87) WO 12.04.2001. WO 01/24811 | 51602 |

| (73) | (51) | (21) | (30) | (11) |
|---|---|---|---|---|
| BOEHRINGER INGELHEIM INTERNATION AL GMBH | ***C 07 D 409/14*** (2006.01)<br>***C 07 D 487/04*** (2006.01)<br>***C 07 D 417/14*** (2006.01)<br>***A 61 K 31/55*** (2006.01)<br>***A 61 P 35/00*** (2006.01)<br>***C 07 D 409/12*** (2006.01)<br>***C 07 D 413/04*** (2006.01)<br>***C 07 D 471/04*** (2006.01)<br>***A 61 P 29/00*** (2006.01)<br>***A 61 P 9/00*** (2006.01) | P-2011/0015 | (30) EP 30.06.2005. 05014270<br>(86) WO 28.06.2006. PCT/EP2006/063611<br>(87) WO 11.01.2007. WO 2007/003536<br>(96) 28.06.2006. 06763910.4<br>(97) 24.11.2010. EP1899330B 2010/47 DE | 51572 |
| BOEHRINGER INGELHEIM INTERNATION AL GMBH | ***A 61 K 9/20*** (2006.01) | P-2011/0032 | (30) EP 14.03.2007. 07104157<br>(86) WO 13.03.2008. PCT/EP2008/053009<br>(87) WO 18.09.2008. WO 2008/110599<br>(96) 13.03.2008. 08717753.1<br>(97) 29.12.2010. EP2120884B 2010/52 EN | 51584 |
| BOEHRINGER INGELHEIM INTERNATION AL GMBH | ***A 61 K 31/46*** (2006.01)<br>***A 61 P 43/00*** (2006.01) | P-2006/0208 | (30) DE 26.09.2003. 10345065.3<br>(86) WO 21.09.2004. PCT/EP2004/010564<br>(87) WO 07.04.2005. WO 2005/030211 A1 | 51585 |
| BOEHRINGER INGELHEIM INTERNATION AL GMBH | ***C 07 D 451/10*** (2006.01)<br>***A 61 K 31/46*** (2006.01)<br>***A 61 P 11/00*** (2006.01) | P-2006/0291 | (30) EP 03.11.2003. 03025077.3<br>(86) WO 29.10.2004. PCT/EP2004/012269<br>(87) WO 12.05.2005. WO 2005/042527 A1 | 51599 |
| BOEHRINGER INGELHEIM PHARMA GMBH & CO.KG | ***A 61 K 31/538*** (2006.01)<br>***A 61 K 31/535*** (2006.01)<br>***A 61 P 11/00*** (2006.01) | P-2005/0361 | (30) DE 15.11.2002. 102 53 282.6<br>(86) WO 11.11.2003. PCT/EP2003/012565<br>(87) WO 03.06.2004. WO 2004/045618 A2 | 51607 |
| BP CHEMICALS LIMITED | ***G 01 N 21/35*** (2006.01) | P-2011/0089 | (30) EP 15.06.2007. 07252448<br>(86) WO 23.05.2008. PCT/GB2008/001778<br>(87) WO 18.12.2008. WO 2008/152351<br>(96) 23.05.2008. 08750693.7<br>(97) 01.12.2010. EP2158472B 2010/48 EN | 51628 |
| BRISTOL-MYERS SQUIBB CO. | ***A 61 K 31/52*** (2006.01)<br>***A 61 K 9/14*** (2006.01)<br>***A 61 P 31/12*** (2006.01) | P-2002/0630 | (30) US 28.02.2000. 60/185,672<br>US 28.07.2000. 60/221,313<br>(86) WO 26.01.2001. PCT/US01/02630<br>(87) WO 07.09.2001. WO 01/64221 | 51561 |
| CELGENE CORPORATION | ***A 61 K 31/454*** (2006.01)<br>***A 61 K 45/06*** (2006.01)<br>***A 61 K 39/395*** (2006.01)<br>***A 61 P 35/00*** (2006.01) | P-2010/0541 | (30) US 03.08.2006. P835752<br>(86) WO 02.08.2007. PCT/US2007/017343<br>(87) WO 14.02.2008. WO 2008/019065<br>(96) 02.08.2007. 07811048.3<br>(97) 03.11.2010. 2046331B 2010/44 EN | 51567 |
| CIRILLI, Alessandro | ***E 05 F 11/04*** (2006.01) | P-2010/0562 | (30) IT 01.02.2007. MC20070016<br>(96) 31.01.2008. 08101146.2<br>(97) 22.09.2010. EP1953320B 2010/38 EN | 51600 |
| CISA S.p.A. | ***A 61 L 2/14*** (2006.01)<br>***A 61 L 2/24*** (2006.01)<br>***A 61 L 2/20*** (2006.01)<br>***A 61 L 2/26*** (2006.01) | P-2010/0511 | (30) BR 16.01.2004. 0400237<br>(86) WO 14.01.2005. PCT/EP2005/000357<br>(87) WO 28.07.2005. WO 2005/067984<br>(96) 14.01.2005. 05700947.4<br>(97) 25.08.2010. EP1735014B 2010/34 EN | 51624 |

| (73) | (51) | (21) | (30) | (11) |
|---|---|---|---|---|
| DAT-SCHAUB A.M.B.A. | ***A 22 C 13/00*** (2006.01)<br>***A 22 C 17/14*** (2006.01) | P-2011/0083 | (30) DK 08.12.2006. 200601616<br>(86) WO 07.12.2007. PCT/DK2007/000535<br>(87) WO 12.06.2008. WO 2008/067820<br>(96) 07.12.2007. 07817929.8<br>(97) 24.11.2010. EP2101590B 2010/47 EN | 51633 |
| DEBIOPHARM S.A. | ***A 61 K 38/13*** (2006.01)<br>***A 61 P 31/14*** (2006.01) | P-2011/0108 | (30) IB 01.10.2004. PCT/2004/03205<br>(86) WO 03.10.2005. PCT/IB2005/002940<br>(87) WO 13.04.2006. WO 2006/038088<br>(96) 03.10.2005. 05791430.1<br>(97) 08.12.2010. EP1793844B 2010/49 EN | 51614 |
| DINIĆ, Dimitrije | ***H 04 S 3/00*** (2007.01) | P-2006/0522 | (30) YU 18.01.2006. MP-2006/0004 | 51598 |
| DRAHT CHRIST GMBH | ***E 02 D 29/02*** (2006.01)<br>***E 01 F 8/02*** (2006.01) | P-2010/0398 | (30) DE 30.08.2006. 202006013295U<br>(96) 10.08.2007. 07015745.8<br>(97) 09.06.2010. EP1895057B 2010/23 DE | 51565 |
| ELI LILLY AND COMPANY | ***C 07 D 471/04*** (2006.01)<br>***A 61 P 35/04*** (2006.01)<br>***A 61 K 31/4375***(2006.01) | P-2011/0042 | (30) US 24.02.2005. 655981P<br>(86) WO 23.02.2006. PCT/US2006/006283<br>(87) WO 31.08.2006. WO 2006/091671<br>(96) 23.02.2006. 06735794.7<br>(97) 01.12.2010. EP1904494B 2010/48 EN | 51590 |
| EURO-CELTIQUE S.A. | ***C 07 D 487/08*** (2006.01) | P-2011/0031 | (30) US 04.03.2005. 658791P<br>(96) 27.02.2006. 09158939.0<br>(97) 10.11.2010. EP2112153B 2010/45 EN | 51568 |
| EURO-CELTIQUE S.A. | ***A 61 K 31/352*** (2006.01)<br>***A 61 P 1/08*** (2006.01)<br>***A 61 P 29/02*** (2006.01) | P-2011/0047 | (30) US 16.06.2005. 691361P<br>US 12.10.2005. 726509P<br>(86) WO 14.06.2006. PCT/EP2006/005761<br>(87) WO 21.12.2006. WO 2006/133941<br>(96) 14.06.2006. 06754384.3<br>(97) 24.11.2010. EP1901734B 2010/47 EN | 51569 |
| EURO-CELTIQUE S.A. | ***A 61 K 31/485*** (2006.01)<br>***A 61 P 25/14*** (2006.01) | P-2011/0030 | (30) EP 08.06.2004. 04013469<br>(86) WO 01.06.2005. PCT/EP2005/005888<br>(87) WO 22.12.2005. WO 2005/120506<br>(96) 01.06.2005. 05754710.1<br>(97) 03.11.2010. EP1781291B 2010/44 EN | 51573 |
| H. LUNDBECK A/S | ***C 07 D 307/87*** (2006.01) | P-2011/0057 | (30) DK 22.06.2005. 200500912<br>(86) WO 22.06.2006. PCT/DK2006/000366<br>(87) WO 28.12.2006. WO 2006/136169<br>(96) 22.06.2006. 06742481.2<br>(97) 02.02.2011. EP1896439B 2011/05 EN | 51575 |
| HEINEKEN TECHNICAL SERVICES B.V. | ***B 67 D 1/08*** (2006.01) | P-2004/0824 | (30) NL 19.03.2002. 1020202<br>(86) WO 19.03.2003. PCT/NL03/00205<br>(87) WO 25.09.2003. WO 03/078297 | 51580 |
| ICOS CORPORATION | ***C 07 D 403/12*** (2006.01)<br>***C 07 D 417/12*** (2006.01)<br>***A 61 K 31/5355***(2006.01)<br>***A 61 P 35/00*** (2006.01)<br>***C 07 D 413/12*** (2006.01)<br>***A 61 K 31/497*** (2006.01)<br>***A 61 K 31/541*** (2006.01) | P-2011/0053 | (30) US 29.03.2005. 666026P<br>(86) WO 29.03.2006. PCT/US2006/011584<br>(87) WO 05.10.2006. WO 2006/105262<br>(96) 29.03.2006. 06748900.5<br>(97) 01.12.2010. EP1869020B 2010/48 EN | 51616 |

| (73) | (51) | (21) | (30) | (11) |
|---|---|---|---|---|
| ITT MANUFACTURING ENTERPRISES, INC. | ***F 04 D 7/04*** (2006.01)<br>***F 04 D 29/04*** (2006.01)<br>***F 04 D 15/00*** (2006.01)<br>***F 04 D 29/16*** (2006.01) | P-2011/0086 | (30) SE 01.07.2005. 0501542<br>(86) WO 05.06.2006. PCT/SE2006/000662<br>(87) WO 11.01.2007. WO 2007/004943<br>(96) 05.06.2006. 06747856.0<br>(97) 24.11.2010. EP1899609B 2010/47 EN | 51593 |
| ITT MANUFACTURING ENTERPRISES, INC. | ***F 04 D 7/04*** (2006.01)<br>***F 04 D 29/22*** (2006.01) | P-2011/0094 | (30) SE 17.06.2005. 0501382<br>(86) WO 05.06.2006. PCT/SE2006/000663<br>(87) WO 21.12.2006. WO 2006/135304<br>(96) 05.06.2006. 06747857.8<br>(97) 12.01.2011. EP1891331B 2011/2 EN | 51594 |
| JANSSEN PHARMACEUTICA N.V. | ***C 07 D 239/84*** (2006.01)<br>***A 61 K 31/517*** (2006.01)<br>***A 61 P 25/28*** (2006.01) | P-2010/0564 | (30) US 06.08.2004. 599811P<br>(86) WO 08.08.2005. PCT/US2005/028191<br>(87) WO 16.02.2006. WO 2006/017836<br>(96) 08.08.2005. 05785256.8<br>(97) 06.10.2010. EP1776349B 2010/40 EN | 51630 |
| JANSSEN PHARMACEUTICA N.V. | ***C 07 D 239/84*** (2006.01)<br>***A 61 P 25/28*** (2006.01)<br>***A 61 K 31/517*** (2006.01) | P-2010/0565 | (30) US 06.08.2004. 599810P<br>(86) WO 08.08.2005. PCT/IB2005/002595<br>(87) WO 09.03.2006. WO 2006/024932<br>(96) 08.08.2005. 05780525.1<br>(97) 29.09.2010. EP1789398B 2010/39 EN | 51631 |
| JANSSEN PHARMACEUTICA NV | ***C 07 D 215/22*** (2006.01)<br>***C 07 D 487/08*** (2006.01)<br>***C 07 D 401/06*** (2006.01)<br>***C 07 D 417/06*** (2006.01)<br>***A 61 K 31/551*** (2006.01)<br>***A 61 P 31/04*** (2006.01)<br>***C 07 D 401/12*** (2006.01)<br>***A 61 K 31/47*** (2006.01)<br>***C 07 D 401/14*** (2006.01)<br>***C 07 D 215/227***(2006.01)<br>***A 61 K 31/4995***(2006.01) | P-2011/0019 | (30) EP 06.12.2006. 06125545<br>(86) WO 04.12.2007. PCT/EP2007/063319<br>(87) WO 12.06.2008. WO 2008/068272<br>(96) 04.12.2007. 07847817.9<br>(97) 27.10.2010. EP2099761B 2010/43 EN | 51582 |
| JELIĆ, Savo | ***H 02 J 7/00*** (2006.01)<br>***H 02 J 7/04*** (2006.01) | P-2008/0001 | | 51588 |
| JOVIĆ, Vasilije | ***E 02 B 3/00*** (2006.01)<br>***G 05 D 9/00*** (2006.01) | P-2007/0090 | | 51586 |
| JURIŠIĆ, Vojislav and JANJIĆ, Mirko | ***F 01 B 13/02*** (2006.01)<br>***F 04 C 18/48*** (2006.01) | P-2006/0047 | | 51597 |
| KARL MARBACH GMBH & CO. KG | ***B 26 F 1/44*** (2006.01) | P-2011/0082 | (30) DE 19.12.2008. 202008016884U<br>(96) 18.11.2009. 09176274.0<br>(97) 19.01.2011. EP2202038B 2011/3 DE | 51583 |
| KARPATI, Melinda-Kinga | ***A 61 F 6/14*** (2006.01) | P-2011/0104 | (30) EP 20.09.2006. 20060019697<br>(86) WO 20.09.2007. PCT/EP2007/008202<br>(87) WO 27.03.2008. WO 2008/034619<br>(96) 20.09.2007. 07818292.0<br>(97) 01.12.2010. EP2079413B 2010/48 EN | 51626 |
| LATSCHBACHER GMBH | ***B 25 C 1/00*** (2006.01)<br>***G 09 F 3/00*** (2006.01)<br>***A 01 G 23/099*** (2006.01)<br>***B 25 C 5/16*** (2006.01) | P-2011/0095 | (96) 30.05.2008. 08009870.0<br>(97) 15.12.2010. EP2127813B 2010/50 DE | 51612 |

| (73) | (51) | (21) | (30) | (11) |
|---|---|---|---|---|
| LES LABORATOIRES SERVIER | ***C 07 D 209/42*** (2006.01)<br>***A 61 K 31/404*** (2006.01)<br>***A 61 P 9/00*** (2006.01) | P-2002/1003 | (30) FR 06.07.2000. 00/08791<br>(86) WO 06.07.2001. PCT/FR01/02169<br>(87) WO 08.11.2001. WO 01/83439 | 51621 |
| MARA-INSTITUT D.O.O. | ***E 04 C 2/04*** (2006.01)<br>***E 04 B 1/04*** (2006.01) | P-2005/0961 | (86) WO 02.07.2003. PCT/HR2003/00034<br>(87) WO 13.01.2005. WO 2005/003481 | 51618 |
| NUTROPIA ERNÄHRUNGS MEDIZINISCHE FORSCHUNGS GmbH | ***A 61 K 31/70*** (2006.01)<br>***A 61 K 31/455*** (2006.01)<br>***A 61 K 31/198*** (2006.01)<br>***A 61 K 31/355*** (2006.01)<br>***A 61 K 31/385*** (2006.01)<br>***A 61 P 39/06*** (2006.01) | P-2005/0376 | (30) AT 19.11.2002. A 1734/2002<br>(86) WO 19.11.2003. PCT/AT2003/000346<br>(87) WO 03.06.2004. WO 2004/045626 | 51606 |
| PFIZER PRODUCTS INC. | ***C 07 D 487/04*** (2006.01)<br>***A 61 K 31/519*** (2006.01)<br>***A 61 P 37/00*** (2006.01) | P-2002/0413 | (30) US 10.12.1999. 60/170,179<br>(86) WO 23.11.2000. PCT/IB00/01742<br>(87) WO 14.06.2001. WO 01/42246 A2 | 51574 |
| PFIZER, INC. | ***C 07 D 401/14*** (2006.01)<br>***A 61 K 31/443*** (2006.01)<br>***C 07 D 401/04*** (2006.01)<br>***A 61 P 35/00*** (2006.01) | P-2011/0085 | (30) US 26.08.2004. 605244P<br>US 14.06.2005. 690803P<br>(86) WO 15.08.2005. PCT/IB2005/002695<br>(87) WO 02.03.2006. WO 2006/021881<br>(96) 15.08.2005. 05782821.2<br>(97) 22.12.2010. EP1784396B 2010/51 EN | 51601 |
| PIERRE FABRE MEDICAMENT | ***A 61 K 31/465*** (2006.01)<br>***C 07 C 67/02*** (2006.01)<br>***A 61 P 9/00*** (2006.01)<br>***A 61 K 31/232*** (2006.01)<br>***C 07 C 69/587*** (2006.01) | P-2011/0091 | (30) FR 23.06.2006. 0605649<br>(86) WO 22.06.2007. PCT/EP2007/056277<br>(87) WO 27.12.2007. WO 2007/147899<br>(96) 22.06.2007. 07765584.3<br>(97) 24.11.2010. EP2034999B 2010/47 EN | 51629 |
| PIPELIFE NEDERLAND B.V. | ***E 03 F 1/00*** (2006.01)<br>***E 03 F 5/10*** (2006.01) | P-2011/0087 | (30) NL 09.05.2007. 2000638<br>(86) WO 09.05.2008. PCT/NL2008/050282<br>(87) WO 20.11.2008. WO 2008/140310<br>(96) 09.05.2008. 08753765.0<br>(97) 12.01.2011. EP2155975B 2011/02 EN | 51617 |
| PURDUE PHARMA LP | ***A 61 K 31/485*** (2006.01)<br>***A 61 K 9/32*** (2006.01)<br>***A 61 K 9/22*** (2006.01) | P-2011/0058 | (30) US 25.08.2006. 840244P<br>(96) 24.08.2007. 09156843.6<br>(97) 01.12.2010. EP2082742B 2010/48 EN | 51591 |
| RANĐELOVIĆ, Vladimir | ***A 61 B 5/01*** (2008.04)<br>***A 61 B 5/05*** (2008.04)<br>***A 61 B 5/0402*** (2008.04) | P-2007/0308 | | 51589 |
| RICHTER GEDEON NYRT. | ***A 61 K 9/20*** (2006.01)<br>***A 61 K 31/505*** (2006.01)<br>***A 61 K 47/12*** (2006.01)<br>***A 61 K 47/02*** (2006.01)<br>***A 61 K 31/22*** (2006.01) | P-2010/0518 | (30) HU 18.09.2006. 0600728<br>(86) WO 11.09.2007. PCT/HU2007/000082<br>(87) WO 27.03.2008. WO 2008/035128<br>(96) 11.09.2007. 07804524.2<br>(97) 24.11.2010. EP2063868B 2010/47 EN | 51563 |
| RICHTER GEDEON NYRT. | ***C 07 D 205/08*** (2006.01)<br>***C 07 D 317/30*** (2006.01)<br>***C 07 F 7/02*** (2006.01)<br>***C 07 D 413/06*** ( 2006.01)<br>***C 07 D 405/06*** (2006.01) | P-2010/0505 | (30) HU 20.12.2005. 0501164<br>(86) WO 18.12.2006. PCT/HU2006/000116<br>(87) WO 28.06.2007. WO 2007/072088<br>(96) 18.12.2006. 06831516.7<br>(97) 03.11.2010. EP1963260B 2010/44 EN | 51613 |

| (73) | (51) | (21) | (30) | (11) |
|---|---|---|---|---|
| S.A. LHOIST RECHERCHE ET DEVELOPPEMENT | ***C 01 F 11/02*** (2006.01)<br>***B 01 J 20/04*** (2006.01)<br>***B 01 D 53/68*** (2006.01)<br>***C 04 B 2/06*** (2006.01)<br>***B 01 D 53/50*** (2006.01) | P-2011/0078 | (30) BE 28.06.2005. 200500328<br>(86) WO 26.06.2006. PCT/EP2006/063542<br>(87) WO 04.01.2007. WO 2007/000433<br>(96) 26.06.2006. 06763882.5<br>(97) 22.12.2010. EP1896364B 2010/51 FR | 51632 |
| SALTECH AG | ***F 42 B 30/02*** (2006.01) | P-2011/0048 | (30) CH 16.02.2005. 270052005<br>(86) WO 13.02.2006. PCT/CH2006/000093<br>(87) WO 24.08.2006. WO 2006/086902<br>(96) 13.02.2006. 06704542.7<br>(97) 10.11.2010. EP1851503B 2010/45 DE | 51625 |
| SANOFI-AVENTIS | ***C 07 C 311/08*** (2006.01)<br>***A 61 K 31/195*** (2006.01) | P-2003/0417 | (30) FR 30.11.2000. 0015477<br>(86) WO 30.11.2001. PCT/FR01/03784<br>(87) WO 06.06.2002. WO 02/44139 A1 | 51571 |
| SANOFI-AVENTIS | ***C 07 D 471/08*** (2006.01) | P-2006/0314 | (30) FR 17.10.2003. 03/12,165<br>(86) WO 15.10.2004. PCT/FR2004/002643<br>(87) WO 28.04.2005. WO 2005/037783 A3 | 51587 |
| SANOFI-AVENTIS | ***C 07 D 307/84*** (2006.01)<br>***C 07 D 307/80*** (2006.01)<br>***C 07 D 407/10*** (2006.01)<br>***C 07 D 409/06*** (2006.01)<br>***C 07 D 407/04*** (2006.01)<br>***C 07 D 471/04*** (2006.01)<br>***A 61 K 31/34*** (2006.01) | P-2003/0129 | (30) FR 23.08.2000. 00/10834<br>(86) WO 21.08.2001. PCT/FR01/02640<br>(87) WO 28.02.2002. WO 02/16339 A1 | 51603 |
| SANOFI-AVENTIS | ***C 07 D 471/04*** (2006.01)<br>***A 61 K 31/437*** (2006.01)<br>***A 61 P 35/00*** (2006.01)<br>***C 07 D 471/16*** (2006.01) | P-2005/0362 | (30) FR 23.10.2002. 02/13264<br>(86) WO 21.10.2003. PCT/FR2003/03110<br>(87) WO 21.05.2004. WO 2004/041817 | 51605 |
| SANOFI-AVENTIS DEUTSCHLAND GmbH | ***A 61 K 38/28*** (2006.01)<br>***A 61 K 47/00*** (2006.01) | P-2003/0735 | (30) DE 23.03.2001. 10114178.5<br>(86) WO 09.03.2002. PCT/EP02/02625<br>(87) WO 03.10.2002. WO 02/076495 A1 | 51579 |
| SANOFI-AVENTIS DEUTSCHLAND GmbH | ***A 61 K 31/4035***(2006.01)<br>***A 61 K 31/155*** (2006.01)<br>***C 07 D 209/46*** (2006.01)<br>***C 07 C 279/20*** (2006.01)<br>***C 07 C 277/08*** (2006.01) | P-2004/1048 | (30) FR 03.06.2002. 0206783<br>(86) WO 20.05.2003. PCT/EP03/05279<br>(87) WO 11.12.2003. WO 03/101450 A1 | 51636 |
| SAPPI NETHERLANDS SERVICES B.V. | ***D 21 H 19/40*** (2006.01)<br>***D 21 H 19/84*** (2006.01)<br>***D 21 H 21/18*** (2006.01)<br>***D 21 H 19/82*** (2006.01)<br>***D 21 H 25/14*** (2006.01)<br>***D 21 H 21/52*** (2006.01) | P-2010/0558 | (30) EP 13.07.2005. 05106427<br>(86) WO 12.07.2006. PCT/EP2006/064143<br>(87) WO 18.01.2007. WO 2007/006794<br>(96) 12.07.2006. 06777722.7<br>(97) 03.11.2010. EP1907626B 2010/44 EN | 51611 |
| SCHIEDEL GmbH & CO. | ***E 04 F 17/02*** (2006.01) | P-2003/0704 | (30) DE 09.03.2001. 101 11 469.9<br>(86) WO 20.12.2001. PCT/EP01/15154<br>(87) WO 19.09.2002. WO 02/072976 | 51564 |
| SDU IDENTIFICATION B.V. | ***B 42 D 15/10*** (2006.01) | P-2011/0020 | (30) NL 17.03.2006. 1031396<br>(86) WO 19.03.2007. PCT/NL2007/050114<br>(87) WO 27.09.2007. WO 2007/108685<br>(96) 19.03.2007. 07715922.6<br>(97) 20.10.2010. EP2001687B 2010/42 EN | 51596 |

| (73) | (51) | (21) | (30) | (11) |
|---|---|---|---|---|
| SERCAL BELGIUM | ***G 01 N 17/00*** (2006.01)<br>***G 01 N 17/04*** (2006.01) | P-2011/0059 | (30) EP 17.01.2008. 08100573<br>(96) 19.01.2009. 09150884.6<br>(97) 05.01.2011. EP2081009B 2011/1 FR | 51609 |
| SIGMA-TAU INDUSTRIE FARMACEUTICHE RIUNITE S.P.A. | ***C 07 C 259/06*** (2006.01)<br>***C 07 D 319/18*** (2006.01)<br>***A 61 P 35/00*** (2006.01)<br>***C 07 C 259/10*** (2006.01)<br>***A 61 K 31/185*** (2006.01) | P-2011/0074 | (30) EP 28.06.2005. 05013953<br>(86) WO 31.05.2006. PCT/EP2006/062799<br>(87) WO 04.01.2007. WO 2007/000383<br>(96) 31.05.2006. 06763427.9<br>(97) 17.11.2010. EP1896399B 2010/46 EN | 51576 |
| SILAG HANDEL AG | ***A 47 J 27/092*** (2006.01)<br>***A 47 J 27/08*** (2006.01) | P-2010/0384 | (30) DE 09.03.2007. 200720003676U<br>(96) 31.01.2008. 08001766.8<br>(97) 09.06.2010. EP2000061B 2010/23 | 51604 |
| ŠTULIĆ, Miroslav | ***B 29 C 49/32*** (2006.01)<br>***B 29 C 49/08*** (2006.01)<br>***B 29 C 49/48*** (2006.01)<br>***B 29 C 49/56*** (2006.01)<br>***B 29 C 49/70*** (2006.01) | P-2004/0095 | | 51620 |
| SUVEN LIFE SCIENCES LIMITED | ***A 61 K 31/403*** (2006.01)<br>***A 61 P 25/00*** (2006.01)<br>***C 07 D 209/88*** (2006.01) | P-2011/0017 | (30) IN 19.10.2005. CH15042005<br>(86) WO 09.06.2006. PCT/IN2006/000195<br>(87) WO 26.04.2007. WO 2007/046111<br>(96) 09.06.2006. 06766266.8<br>(97) 20.10.2010. EP1948166B 2010/42 EN | 51627 |
| SYNGENTA PARTICIPATIONS AG | ***A 01 N 57/20*** (2006.01)<br>***A 01 N 43/828*** (2006.01)<br>***A 01 N 37/22*** (2006.01)<br>***A 01 N 41/10*** (2006.01)<br>***A 01 N 43/78*** (2006.01) | P-2005/0928 | (30) GB 18.06.2003. 0314190.0<br>(86) WO 07.06.2004. PCT/GB2004/002409<br>(87) WO 29.12.2004. WO 2004/112481 | 51570 |
| SYNGENTA PARTICIPATIONS AG | ***A 01 N 43/56*** (2006.01) | P-2011/0098 | (30) EP 25.04.2007. 07008370<br>(86) WO 23.04.2008. PCT/EP2008/003279<br>(87) WO 06.11.2008. WO 2008/131901<br>(96) 23.04.2008. 08749078.5<br>(97) 08.12.2010. EP2150113B 2010/49 EN | 51634 |
| TAKEDA PHARMACEUTICAL COMPANY LIMITED | ***A 61 K 9/24*** (2006.01) | P-2011/0080 | (30) JP 01.02.2007. 2007023594<br>(86) WO 30.01.2008. PCT/JP2008/051900<br>(87) WO 07.08.2008. WO 2008/093882<br>(96) 30.01.2008. 08704473.1<br>(97) 17.11.2010. EP2107905B 2010/46 EN | 51592 |
| TALECRIS BIOTHERAPEUTICS, INC. | ***C 12 N 9/68*** (2006.01) | P-2010/0473 | (30) US 22.04.2004. 564472P<br>(86) WO 21.04.2005. PCT/US2005/013562<br>(87) WO 10.11.2005. WO 2005/105990<br>(96) 21.04.2005. 05737862.2<br>(97) 04.08.2010. EP1740698B 2010/31 EN | 51623 |
| TARKETT SAS | ***B 02 C 19/18*** (2006.01)<br>***B 29 B 17/02*** (2006.01)<br>***B 29 B 17/04*** (2006.01) | P-2005/0385 | (30) EP 26.11.2002. 02292926.9<br>(86) WO 24.11.2003. PCT/EP03/050888<br>(87) WO 10.06.2004. WO 2004/048059 | 51608 |
| TIGAR TEHNIČKA GUMA DOO | ***B 29 D 23/18*** (2006.01)<br>***B 29 C 63/20*** (2006.01) | P-2006/0071 | | 51610 |

| (73) | (51) | (21) | (30) | (11) |
|---|---|---|---|---|
| T-MOBILE INTERNATIONAL AG | ***H 04 W 36/36*** (2009.01) | P-2011/0001 | (30) DE 21.07.2005. 102005034750<br>DE 21.07.2005. 102005034760<br>DE 01.08.2005. 102005036583<br>(86) WO 12.07.2006. PCT/DE2006/001203<br>(87) WO 25.01.2007. WO 2007/009433<br>(96) 12.07.2006. 06761789.4<br>(97) 06.10.2010. EP1905261B 2010/40 DE | 51577 |
| WARNER CHILCOTT COMPANY, LLC | ***A 61 K 9/20*** (2006.01)<br>***A 61 K 9/32*** (2006.01) | P-2010/0458 | (30) US 24.05.2004. 573881P<br>(86) WO 14.04.2005. PCT/US2005/012537<br>(87) WO 08.12.2005. WO 2005/115331<br>(96) 14.04.2005. 05735411.0<br>(97) 28.07.2010. EP1753395B 2010/30 EN | 51562 |
| ZESIUM MOBILE D.O.O. ZA PROIZVODNJU KOMUNIKACIONOG SOFTVERA I HARDVERA | ***G 08 B 25/00*** (2006.01)<br>***G 06 F 19/00*** (2006.01) | P-2010/0018 | | 51619 |

## ИНДЕКС БРОЈЕВА ПАТЕНАТА

PATENT NUMBER INDEX

| (11) | (51) |
|---|---|
| 51561 | ***A 61 K 31/52*** (2006.01) |
| | ***A 61 K 9/14*** (2006.01) |
| | ***A 61 P 31/12*** (2006.01) |
| 51562 | ***A 61 K 9/20*** (2006.01) |
| | ***A 61 K 9/32*** (2006.01) |
| 51563 | ***A 61 K 9/20*** (2006.01) |
| | ***A 61 K 31/505*** (2006.01) |
| | ***A 61 K 47/12*** (2006.01) |
| | ***A 61 K 47/02*** (2006.01) |
| | ***A 61 K 31/22*** (2006.01) |
| 51564 | ***E 04 F 17/02*** (2006.01) |
| 51565 | ***E 02 D 29/02*** (2006.01) |
| | ***E 01 F 8/02*** (2006.01) |
| 51566 | ***C 07 D 417/08*** (2006.01) |
| 51567 | ***A 61 K 31/454*** (2006.01) |
| | ***A 61 K 45/06*** (2006.01) |
| | ***A 61 K 39/395*** (2006.01) |
| | ***A 61 P 35/00*** (2006.01) |
| 51568 | ***C 07 D 487/08*** (2006.01) |
| 51569 | ***A 61 K 31/352*** (2006.01) |
| | ***A 61 P 1/08*** (2006.01) |
| | ***A 61 P 29/02*** (2006.01) |
| 51570 | ***A 01 N 57/20*** (2006.01) |
| | ***A 01 N 43/828*** (2006.01) |
| | ***A 01 N 37/22*** (2006.01) |
| | ***A 01 N 41/10*** (2006.01) |
| | ***A 01 N 43/78*** (2006.01) |
| 51571 | ***C 07 C 311/08*** (2006.01) |
| | ***A 61 K 31/195*** (2006.01) |
| 51572 | ***C 07 D 409/14*** (2006.01) |
| | ***C 07 D 487/04*** (2006.01) |
| | ***C 07 D 417/14*** (2006.01) |
| | ***A 61 K 31/55*** (2006.01) |
| | ***A 61 P 35/00*** (2006.01) |
| | ***C 07 D 409/12*** (2006.01) |
| | ***C 07 D 413/04*** (2006.01) |
| | ***C 07 D 471/04*** (2006.01) |
| | ***A 61 P 29/00*** (2006.01) |
| | ***A 61 P 9/00*** (2006.01) |
| 51573 | ***A 61 K 31/485*** (2006.01) |
| | ***A 61 P 25/14*** (2006.01) |

| (11) | (51) |
|---|---|
| 51574 | ***C 07 D 487/04*** (2006.01) |
| | ***A 61 K 31/519*** (2006.01) |
| | ***A 61 P 37/00*** (2006.01) |
| 51575 | ***C 07 D 307/87*** (2006.01) |
| 51576 | ***C 07 C 259/06*** (2006.01) |
| | ***C 07 D 319/18*** (2006.01) |
| | ***A 61 P 35/00*** (2006.01) |
| | ***C 07 C 259/10*** (2006.01) |
| | ***A 61 K 31/185*** (2006.01) |
| 51577 | ***H 04 W 36/36*** (2009.01) |
| 51578 | ***A 61 P 31/04*** (2006.01) |
| | ***A 61 K 9/20*** (2006.01) |
| | ***A 61 K 31/704*** (2006.01) |
| 51579 | ***A 61 K 38/28*** (2006.01) |
| | ***A 61 K 47/00*** (2006.01) |
| 51580 | ***B 67 D 1/08*** (2006.01) |
| 51581 | ***C 07 D 513/04*** (2006.01) |
| | ***A 61 P 11/06*** (2006.01) |
| | ***A 61 P 9/10*** (2006.01) |
| | ***A 61 K 31/519*** (2006.01) |
| | ***A 61 P 25/00*** (2006.01) |
| 51582 | ***C 07 D 215/22*** (2006.01) |
| | ***C 07 D 487/08*** (2006.01) |
| | ***C 07 D 401/06*** (2006.01) |
| | ***C 07 D 417/06*** (2006.01) |
| | ***A 61 K 31/551*** (2006.01) |
| | ***A 61 P 31/04*** (2006.01) |
| | ***C 07 D 401/12*** (2006.01) |
| | ***A 61 K 31/47*** (2006.01) |
| | ***C 07 D 401/14*** (2006.01) |
| | ***C 07 D 215/227***(2006.01) |
| | ***A 61 K 31/4995***(2006.01) |
| 51583 | ***B 26 F 1/44*** (2006.01) |
| 51584 | ***A 61 K 9/20*** (2006.01) |
| 51585 | ***A 61 K 31/46*** (2006.01) |
| | ***A 61 P 43/00*** (2006.01) |
| 51586 | ***E 02 B 3/00*** (2006.01) |
| | ***G 05 D 9/00*** (2006.01) |
| 51587 | ***C 07 D 471/08*** (2006.01) |
| 51588 | ***H 02 J 7/00*** (2006.01) |
| | ***H 02 J 7/04*** (2006.01) |

| (11) | (51) |
|---|---|
| 51589 | ***A 61 B 5/01*** (2008.04) |
| | ***A 61 B 5/05*** (2008.04) |
| | ***A 61 B 5/0402*** (2008.04) |
| 51590 | ***C 07 D 471/04*** (2006.01) |
| | ***A 61 P 35/04*** (2006.01) |
| | ***A 61 K 31/4375***(2006.01) |
| 51591 | ***A 61 K 31/485*** (2006.01) |
| | ***A 61 K 9/32*** (2006.01) |
| | ***A 61 K 9/22*** (2006.01) |
| 51592 | ***A 61 K 9/24*** (2006.01) |
| 51593 | ***F 04 D 7/04*** (2006.01) |
| | ***F 04 D 29/04*** (2006.01) |
| | ***F 04 D 15/00*** (2006.01) |
| | ***F 04 D 29/16*** (2006.01) |
| 51594 | ***F 04 D 7/04*** (2006.01) |
| | ***F 04 D 29/22*** (2006.01) |
| 51595 | ***B 65 G 63/00*** (2006.01) |
| | ***B 66 C 19/00*** (2006.01) |
| 51596 | ***B 42 D 15/10*** (2006.01) |
| 51597 | ***F 01 B 13/02*** (2006.01) |
| | ***F 04 C 18/48*** (2006.01) |
| 51598 | ***H 04 S 3/00 (2007.01)*** |
| 51599 | ***C 07 D 451/10*** (2006.01) |
| | ***A 61 K 31/46*** (2006.01) |
| | ***A 61 P 11/00*** (2006.01) |
| 51600 | ***E 05 F 11/04*** (2006.01) |
| 51601 | ***C 07 D 401/14*** (2006.01) |
| | ***A 61 K 31/4439***(2006.01) |
| | ***C 07 D 401/04*** (2006.01) |
| | ***A 61 P 35/00*** (2006.01) |
| 51602 | ***A 61 K 38/17*** (2006.01) |
| 51603 | ***C 07 D 307/84*** (2006.01) |
| | ***C 07 D 307/80*** (2006.01) |
| | ***C 07 D 407/10*** (2006.01) |
| | ***C 07 D 409/06*** (2006.01) |
| | ***C 07 D 407/04*** (2006.01) |
| | ***C 07 D 471/04*** (2006.01) |
| | ***A 61 K 31/34*** (2006.01) |
| 51604 | ***A 47 J 27/092*** (2006.01) |
| | ***A 47 J 27/08*** (2006.01) |
| 51605 | ***C 07 D 471/04*** (2006.01) |
| | ***A 61 K 31/437*** (2006.01) |
| | ***A 61 P 35/00*** (2006.01) |
| | ***C 07 D 471/16*** (2006.01) |

| (11) | (51) |
|---|---|
| 51606 | ***A 61 K 31/70*** (2006.01) |
| | ***A 61 K 31/455*** (2006.01) |
| | ***A 61 K 31/198*** (2006.01) |
| | ***A 61 K 31/355*** (2006.01) |
| | ***A 61 K 31/385*** (2006.01) |
| | ***A 61 P 39/06*** (2006.01) |
| 51607 | ***A 61 K 31/538*** (2006.01) |
| | ***A 61 K 31/535*** (2006.01) |
| | ***A 61 P 11/00*** (2006.01) |
| 51608 | ***B 02 C 19/18*** (2006.01) |
| | ***B 29 B 17/02*** (2006.01) |
| | ***B 29 B 17/04*** (2006.01) |
| 51609 | ***G 01 N 17/00*** (2006.01) |
| | ***G 01 N 17/04*** (2006.01) |
| 51610 | ***B 29 D 23/18*** (2006.01) |
| | ***B 29 C 63/20*** (2006.01) |
| 51611 | ***D 21 H 19/40*** (2006.01) |
| | ***D 21 H 19/84*** (2006.01) |
| | ***D 21 H 21/18*** (2006.01) |
| | ***D 21 H 19/82*** (2006.01) |
| | ***D 21 H 25/14*** (2006.01) |
| | ***D 21 H 21/52*** (2006.01) |
| 51612 | ***B 25 C 1/00*** (2006.01) |
| | ***G 09 F 3/00*** (2006.01) |
| | ***A 01 G 23/099*** (2006.01) |
| | ***B 25 C 5/16*** (2006.01) |
| 51613 | ***C 07 D 205/08*** (2006.01) |
| | ***C 07 D 317/30*** (2006.01) |
| | ***C 07 F 7/02*** (2006.01) |
| | ***C 07 D 413/06*** (2006.01) |
| | ***C 07 D 405/06*** (2006.01) |
| 51614 | ***A 61 K 38/13*** (2006.01) |
| | ***A 61 P 31/14*** (2006.01) |
| 51615 | ***A 61 K 9/08*** (2006.01) |
| | ***A 61 K 31/7072***(2006.01) |
| | ***A 61 K 47/32*** (2006.01) |
| | ***A 61 P 27/02*** (2006.01) |
| 51616 | ***C 07 D 403/12*** (2006.01) |
| | ***C 07 D 417/12*** (2006.01) |
| | ***A 61 K 31/5355***(2006.01) |
| | ***A 61 P 35/00*** (2006.01) |
| | ***C 07 D 413/12*** (2006.01) |
| | ***A 61 K 31/497*** (2006.01) |
| | ***A 61 K 31/541*** (2006.01) |
| 51617 | ***E 03 F 1/00*** (2006.01) |
| | ***E 03 F 5/10*** (2006.01) |
| 51618 | ***E 04 C 2/04*** (2006.01) |
| | ***E 04 B 1/04*** (2006.01) |

| (11) | (51) |
|---|---|
| 51619 | ***G 08 B 25/00*** (2006.01) |
| | ***G 06 F 19/00*** (2006.01) |
| 51620 | ***B 29 C 49/32*** (2006.01) |
| | ***B 29 C 49/08*** (2006.01) |
| | ***B 29 C 49/48*** (2006.01) |
| | ***B 29 C 49/56*** (2006.01) |
| | ***B 29 C 49/70*** (2006.01) |
| 51621 | ***C 07 D 209/42*** (2006.01) |
| | ***A 61 K 31/404*** (2006.01) |
| | ***A 61 P 9/00*** (2006.01) |
| 51622 | ***C 07 D 401/04*** (2006.01) |
| | ***C 07 D 405/14*** (2006.01) |
| | ***A 01 N 43/707*** (2006.01) |
| | ***C 07 D 401/14*** (2006.01) |
| | ***C 07 D 409/14*** (2006.01) |
| 51623 | ***C 12 N 9/68*** (2006.01) |
| 51624 | ***A 61 L 2/14*** (2006.01) |
| | ***A 61 L 2/24*** (2006.01) |
| | ***A 61 L 2/20*** (2006.01) |
| | ***A 61 L 2/26*** (2006.01) |
| 51625 | ***F 42 B 30/02*** (2006.01) |
| 51626 | ***A 61 F 6/14*** (2006.01) |
| 51627 | ***A 61 K 31/403*** (2006.01) |
| | ***A 61 P 25/00*** (2006.01) |
| | ***C 07 D 209/88*** (2006.01) |
| 51628 | ***G 01 N 21/35*** (2006.01) |

| (11) | (51) |
|---|---|
| 51629 | ***A 61 K 31/465*** (2006.01) |
| | ***C 07 C 67/02*** (2006.01) |
| | ***A 61 P 9/00*** (2006.01) |
| | ***A 61 K 31/232*** (2006.01) |
| | ***C 07 C 69/587*** (2006.01) |
| 51630 | ***C 07 D 239/84*** (2006.01) |
| | ***A 61 K 31/517*** (2006.01) |
| | ***A 61 P 25/28*** (2006.01) |
| 51631 | ***C 07 D 239/84*** (2006.01) |
| | ***A 61 P 25/28*** (2006.01) |
| | ***A 61 K 31/517*** (2006.01) |
| 51632 | ***C 01 F 11/02*** (2006.01) |
| | ***B 01 J 20/04*** (2006.01) |
| | ***B 01 D 53/68*** (2006.01) |
| | ***C 04 B 2/06*** (2006.01) |
| | ***B 01 D 53/50*** (2006.01) |
| 51633 | ***A 22 C 13/00*** (2006.01) |
| | ***A 22 C 17/14*** (2006.01) |
| 51634 | ***A 01 N 43/56*** (2006.01) |
| 51635 | ***A 61 K 39/395*** (2006.01) |
| | ***C 07 K 16/00*** (2006.01) |
| | ***C 07 K 16/18*** (2006.01) |
| | ***C 07 K 16/30*** (2006.01) |
| | ***C 07 K 16/46*** (2006.01) |
| 51636 | ***A 61 K 31/4035***(2006.01) |
| | ***A 61 K 31/155*** (2006.01) |
| | ***C 07 D 209/46*** (2006.01) |
| | ***C 07 C 279/20*** (2006.01) |
| | ***C 07 C 277/08*** (2006.01) |

## ИНДЕКС БРОЈЕВА ПАТЕНАТА ПРЕМА МКП

INDEX OF PATENTS ACCORDING TO IPC

| (51) | (11) |
|---|---|
| ***A 01 G 23/099*** (2006.01) | 51612 |
| ***A 01 N 37/22*** (2006.01) | 51570 |
| ***A 01 N 41/10*** (2006.01) | 51570 |
| ***A 01 N 43/56*** (2006.01) | 51634 |
| ***A 01 N 43/707*** (2006.01) | 51622 |
| ***A 01 N 43/78*** (2006.01) | 51570 |
| ***A 01 N 43/828*** (2006.01) | 51570 |
| ***A 01 N 57/20*** (2006.01) | 51570 |
| ***A 22 C 13/00*** (2006.01) | 51633 |
| ***A 22 C 17/14*** (2006.01) | 51633 |
| ***A 47 J 27/08*** (2006.01) | 51604 |
| ***A 47 J 27/092*** (2006.01) | 51604 |
| ***A 61 B 5/01*** (2008.04) | 51589 |
| ***A 61 B 5/0402*** (2008.04) | 51589 |
| ***A 61 B 5/05*** (2008.04) | 51589 |
| ***A 61 F 6/14*** (2006.01) | 51626 |
| ***A 61 K 9/08*** (2006.01) | 51615 |
| ***A 61 K 9/14*** (2006.01) | 51561 |
| ***A 61 K 9/20*** (2006.01) | 51562 |
| ***A 61 K 9/20*** (2006.01) | 51563 |
| ***A 61 K 9/20*** (2006.01) | 51578 |
| ***A 61 K 9/20*** (2006.01) | 51584 |
| ***A 61 K 9/22*** (2006.01) | 51591 |
| ***A 61 K 9/24*** (2006.01) | 51592 |
| ***A 61 K 9/32*** (2006.01) | 51562 |
| ***A 61 K 9/32*** (2006.01) | 51591 |
| ***A 61 K 31/155*** (2006.01) | 51636 |
| ***A 61 K 31/185*** (2006.01) | 51576 |

| (51) | (11) |
|---|---|
| ***A 61 K 31/195*** (2006.01) | 51571 |
| ***A 61 K 31/198*** (2006.01) | 51606 |
| ***A 61 K 31/22*** (2006.01) | 51563 |
| ***A 61 K 31/232*** (2006.01) | 51629 |
| ***A 61 K 31/34*** (2006.01) | 51603 |
| ***A 61 K 31/352*** (2006.01) | 51569 |
| ***A 61 K 31/355*** (2006.01) | 51606 |
| ***A 61 K 31/385*** (2006.01) | 51606 |
| ***A 61 K 31/403*** (2006.01) | 51627 |
| ***A 61 K 31/4035***(2006.01) | 51636 |
| ***A 61 K 31/404*** (2006.01) | 51621 |
| ***A 61 K 31/437*** (2006.01) | 51605 |
| ***A 61 K 31/4375***(2006.01) | 51590 |
| ***A 61 K 31/4439***(2006.01) | 51601 |
| ***A 61 K 31/454*** (2006.01) | 51567 |
| ***A 61 K 31/455*** (2006.01) | 51606 |
| ***A 61 K 31/46*** (2006.01) | 51585 |
| ***A 61 K 31/46*** (2006.01) | 51599 |
| ***A 61 K 31/465*** (2006.01) | 51629 |
| ***A 61 K 31/47*** (2006.01) | 51582 |
| ***A 61 K 31/485*** (2006.01) | 51573 |
| ***A 61 K 31/485*** (2006.01) | 51591 |
| ***A 61 K 31/497*** (2006.01) | 51616 |
| ***A 61 K 31/4995***(2006.01) | 51582 |
| ***A 61 K 31/505*** (2006.01) | 51563 |
| ***A 61 K 31/517*** (2006.01) | 51630 |
| ***A 61 K 31/517*** (2006.01) | 51631 |
| ***A 61 K 31/519*** (2006.01) | 51574 |

| (51) | (11) |
|---|---|
| ***A 61 K 31/519*** (2006.01) | 51581 |
| ***A 61 K 31/52*** (2006.01) | 51561 |
| ***A 61 K 31/535*** (2006.01) | 51607 |
| ***A 61 K 31/5355***(2006.01) | 51616 |
| ***A 61 K 31/538*** (2006.01) | 51607 |
| ***A 61 K 31/541*** (2006.01) | 51616 |
| ***A 61 K 31/55*** (2006.01) | 51572 |
| ***A 61 K 31/551*** (2006.01) | 51582 |
| ***A 61 K 31/70*** (2006.01) | 51606 |
| ***A 61 K 31/704*** (2006.01) | 51578 |
| ***A 61 K 31/7072***(2006.01) | 51615 |
| ***A 61 K 38/13*** (2006.01) | 51614 |
| ***A 61 K 38/17*** (2006.01) | 51602 |
| ***A 61 K 38/28*** (2006.01) | 51579 |
| ***A 61 K 39/395*** (2006.01) | 51567 |
| ***A 61 K 39/395*** (2006.01) | 51635 |
| ***A 61 K 45/06*** (2006.01) | 51567 |
| ***A 61 K 47/00*** (2006.01) | 51579 |
| ***A 61 K 47/02*** (2006.01) | 51563 |
| ***A 61 K 47/12*** (2006.01) | 51563 |
| ***A 61 K 47/32*** (2006.01) | 51615 |
| ***A 61 L 2/14*** (2006.01) | 51624 |
| ***A 61 L 2/20*** (2006.01) | 51624 |
| ***A 61 L 2/24*** (2006.01) | 51624 |
| ***A 61 L 2/26*** (2006.01) | 51624 |
| ***A 61 P 1/08*** (2006.01) | 51569 |
| ***A 61 P 9/00*** (2006.01) | 51572 |
| ***A 61 P 9/00*** (2006.01) | 51621 |
| ***A 61 P 9/00*** (2006.01) | 51629 |
| ***A 61 P 9/10*** (2006.01) | 51581 |
| ***A 61 P 11/00*** (2006.01) | 51599 |

| (51) | (11) |
|---|---|
| ***A 61 P 11/00*** (2006.01) | 51607 |
| ***A 61 P 11/06*** (2006.01) | 51581 |
| ***A 61 P 25/00*** (2006.01) | 51581 |
| ***A 61 P 25/00*** (2006.01) | 51627 |
| ***A 61 P 25/14*** (2006.01) | 51573 |
| ***A 61 P 25/28*** (2006.01) | 51630 |
| ***A 61 P 25/28*** (2006.01) | 51631 |
| ***A 61 P 27/02*** (2006.01) | 51615 |
| ***A 61 P 29/00*** (2006.01) | 51572 |
| ***A 61 P 29/02*** (2006.01) | 51569 |
| ***A 61 P 31/04*** (2006.01) | 51578 |
| ***A 61 P 31/04*** (2006.01) | 51582 |
| ***A 61 P 31/12*** (2006.01) | 51561 |
| ***A 61 P 31/14*** (2006.01) | 51614 |
| ***A 61 P 35/00*** (2006.01) | 51567 |
| ***A 61 P 35/00*** (2006.01) | 51572 |
| ***A 61 P 35/00*** (2006.01) | 51576 |
| ***A 61 P 35/00*** (2006.01) | 51601 |
| ***A 61 P 35/00*** (2006.01) | 51605 |
| ***A 61 P 35/00*** (2006.01) | 51616 |
| ***A 61 P 35/04*** (2006.01) | 51590 |
| ***A 61 P 37/00*** (2006.01) | 51574 |
| ***A 61 P 39/06*** (2006.01) | 51606 |
| ***A 61 P 43/00*** (2006.01) | 51585 |
| ***B 01 D 53/50*** (2006.01) | 51632 |
| ***B 01 D 53/68*** (2006.01) | 51632 |
| ***B 01 J 20/04*** (2006.01) | 51632 |
| ***B 02 C 19/18*** (2006.01) | 51608 |
| ***B 25 C 1/00*** (2006.01) | 51612 |
| ***B 25 C 5/16*** (2006.01) | 51612 |
| ***B 26 F 1/44*** (2006.01) | 51583 |

| (51) | (11) |
|---|---|
| ***B 29 B 17/02*** (2006.01) | 51608 |
| ***B 29 B 17/04*** (2006.01) | 51608 |
| ***B 29 C 49/08*** (2006.01) | 51620 |
| ***B 29 C 49/32*** (2006.01) | 51620 |
| ***B 29 C 49/48*** (2006.01) | 51620 |
| ***B 29 C 49/56*** (2006.01) | 51620 |
| ***B 29 C 49/70*** (2006.01) | 51620 |
| ***B 29 C 63/20*** (2006.01) | 51610 |
| ***B 29 D 23/18*** (2006.01) | 51610 |
| ***B 42 D 15/10*** (2006.01) | 51596 |
| ***B 65 G 63/00*** (2006.01) | 51595 |
| ***B 66 C 19/00*** (2006.01) | 51595 |
| ***B 67 D 1/08*** (2006.01) | 51580 |
| ***C 01 F 11/02*** (2006.01) | 51632 |
| ***C 04 B 2/06*** (2006.01) | 51632 |
| ***C 07 C 67/02*** (2006.01) | 51629 |
| ***C 07 C 69/587*** (2006.01) | 51629 |
| ***C 07 C 259/06*** (2006.01) | 51576 |
| ***C 07 C 259/10*** (2006.01) | 51576 |
| ***C 07 C 277/08*** (2006.01) | 51636 |
| ***C 07 C 279/20*** (2006.01) | 51636 |
| ***C 07 C 311/08*** (2006.01) | 51571 |
| ***C 07 D 205/08*** (2006.01) | 51613 |
| ***C 07 D 209/42*** (2006.01) | 51621 |
| ***C 07 D 209/46*** (2006.01) | 51636 |
| ***C 07 D 209/88*** (2006.01) | 51627 |
| ***C 07 D 215/22*** (2006.01) | 51582 |
| ***C 07 D 215/227***(2006.01) | 51582 |
| ***C 07 D 239/84*** (2006.01) | 51630 |
| ***C 07 D 239/84*** (2006.01) | 51631 |
| ***C 07 D 307/80*** (2006.01) | 51603 |

| (51) | (11) |
|---|---|
| ***C 07 D 307/84*** (2006.01) | 51603 |
| ***C 07 D 307/87*** (2006.01) | 51575 |
| ***C 07 D 317/30*** (2006.01) | 51613 |
| ***C 07 D 319/18*** (2006.01) | 51576 |
| ***C 07 D 401/04*** (2006.01) | 51601 |
| ***C 07 D 401/04*** (2006.01) | 51622 |
| ***C 07 D 401/06*** (2006.01) | 51582 |
| ***C 07 D 401/12*** (2006.01) | 51582 |
| ***C 07 D 401/14*** (2006.01) | 51582 |
| ***C 07 D 401/14*** (2006.01) | 51601 |
| ***C 07 D 401/14*** (2006.01) | 51622 |
| ***C 07 D 403/12*** (2006.01) | 51616 |
| ***C 07 D 405/06*** (2006.01) | 51613 |
| ***C 07 D 405/14*** (2006.01) | 51622 |
| ***C 07 D 407/04*** (2006.01) | 51603 |
| ***C 07 D 407/10*** (2006.01) | 51603 |
| ***C 07 D 409/06*** (2006.01) | 51603 |
| ***C 07 D 409/12*** (2006.01) | 51572 |
| ***C 07 D 409/14*** (2006.01) | 51572 |
| ***C 07 D 409/14*** (2006.01) | 51622 |
| ***C 07 D 413/04*** (2006.01) | 51572 |
| ***C 07 D 413/06*** (2006.01) | 51613 |
| ***C 07 D 413/12*** (2006.01) | 51616 |
| ***C 07 D 417/06*** (2006.01) | 51582 |
| ***C 07 D 417/08*** (2006.01) | 51566 |
| ***C 07 D 417/12*** (2006.01) | 51616 |
| ***C 07 D 417/14*** (2006.01) | 51572 |
| ***C 07 D 451/10*** (2006.01) | 51599 |
| ***C 07 D 471/04*** (2006.01) | 51572 |
| ***C 07 D 471/04*** (2006.01) | 51590 |
| ***C 07 D 471/04*** (2006.01) | 51603 |

| (51) | | (11) |
|---|---|---|
| ***C 07 D 471/04*** | (2006.01) | 51605 |
| ***C 07 D 471/08*** | (2006.01) | 51587 |
| ***C 07 D 471/16*** | (2006.01) | 51605 |
| ***C 07 D 487/04*** | (2006.01) | 51572 |
| ***C 07 D 487/04*** | (2006.01) | 51574 |
| ***C 07 D 487/08*** | (2006.01) | 51568 |
| ***C 07 D 487/08*** | (2006.01) | 51582 |
| ***C 07 D 513/04*** | (2006.01) | 51581 |
| ***C 07 F 7/02*** | (2006.01) | 51613 |
| ***C 07 K 16/00*** | (2006.01) | 51635 |
| ***C 07 K 16/18*** | (2006.01) | 51635 |
| ***C 07 K 16/30*** | (2006.01) | 51635 |
| ***C 07 K 16/46*** | (2006.01) | 51635 |
| ***C 12 N 9/68*** | (2006.01) | 51623 |
| ***D 21 H 19/40*** | (2006.01) | 51611 |
| ***D 21 H 19/82*** | (2006.01) | 51611 |
| ***D 21 H 19/84*** | (2006.01) | 51611 |
| ***D 21 H 21/18*** | (2006.01) | 51611 |
| ***D 21 H 21/52*** | (2006.01) | 51611 |
| ***D 21 H 25/14*** | (2006.01) | 51611 |
| ***E 01 F 8/02*** | (2006.01) | 51565 |
| ***E 02 B 3/00*** | (2006.01) | 51586 |
| ***E 02 D 29/02*** | (2006.01) | 51565 |
| ***E 03 F 1/00*** | (2006.01) | 51617 |
| ***E 03 F 5/10*** | (2006.01) | 51617 |

| (51) | | (11) |
|---|---|---|
| ***E 04 B 1/04*** | (2006.01) | 51618 |
| ***E 04 C 2/04*** | (2006.01) | 51618 |
| ***E 04 F 17/02*** | (2006.01) | 51564 |
| ***E 05 F 11/04*** | (2006.01) | 51600 |
| ***F 01 B 13/02*** | (2006.01) | 51597 |
| ***F 04 C 18/48*** | (2006.01) | 51597 |
| ***F 04 D 7/04*** | (2006.01) | 51593 |
| ***F 04 D 7/04*** | (2006.01) | 51594 |
| ***F 04 D 15/00*** | (2006.01) | 51593 |
| ***F 04 D 29/04*** | (2006.01) | 51593 |
| ***F 04 D 29/16*** | (2006.01) | 51593 |
| ***F 04 D 29/22*** | (2006.01) | 51594 |
| ***F 42 B 30/02*** | (2006.01) | 51625 |
| ***G 01 N 17/00*** | (2006.01) | 51609 |
| ***G 01 N 17/04*** | (2006.01) | 51609 |
| ***G 01 N 21/35*** | (2006.01) | 51628 |
| ***G 05 D 9/00*** | (2006.01) | 51586 |
| ***G 06 F 19/00*** | (2006.01) | 51619 |
| ***G 08 B 25/00*** | (2006.01) | 51619 |
| ***G 09 F 3/00*** | (2006.01) | 51612 |
| ***H 02 J 7/00*** | (2006.01) | 51588 |
| ***H 02 J 7/04*** | (2006.01) | 51588 |
| ***H 04 S 3/00*** | (2007.01) | 51598 |
| ***H 04 W 36/36*** | (2009.01) | 51577 |

ПРЕСТАНАК ВАЖНОСТИ РЕГИСТРОВАНИХ ПАТЕНАТА

## Termination of validity of Registred Patents

**1. Истеком законског рока од 20 година:**

Патент бр. **47962** чији је носилац PFIZER INC., NEW YORK, NEW YORK, US, престао је да важи дана 20.06.2011. године.

Патент бр. **48052** чији је носилац NOVO NORDISK A/S, NOVO ALLÉ, 2880 BAGSVAERD, DK, престао је да важи дана 29.06.2011. године.

Патент бр. **48112** чији је носилац ISHIHARA SANGYO KAISHA,LTD., OSAKA, JP, престао је да важи дана 20.06.2011. године.

Патент бр. **49056** чији је носилац ГАЛЕКИКА А.Д. – ИНСТИТУТ, Батајнички друм бб, 11080 Београд, RS, престао је да важи дана 02.07.2011. године.

Патент бр. **48054** чији је носилац AWD.PHARMA GmbH & Co. KG, LEIPZIGER STRASSE 7-13, 01097 DRESDEN, DE, престао је да важи дана 13.07.2011. године.

Патент бр. **48114** чији је носилац Институт техничких наука Српске академије науке и уметности, Кнеза Михаила 35/IV, 11000 Beograd, RS, престао је да важи дана 06.07.2011 године.

Патент бр. **48665** чији су носиоци BAXTER HEALTHCARE S.A., CH-8304 WALLISELLEN, CH и BAXTER INTERNATIONAL INC.,ONE BAXTER PARKWAY, DEERFIELD IL 60015,US, HORST SCHULTZ, HOCHNEIM, DE, престао је да важи дана 13.07.2011. године.

**2. Због неплаћања таксе за одржавање права у периоду од 06. 12. 2010. до 05. 02. 2011. године:**

Патент бр. **48661** чији је носилац IVAX GYOGYSZERKUTATO INTEZET KFT., 47-49 SZABADSÁGHARCOSOK UTJA, BUDAPEST 1045, HU, престао је да важи дана 21.12.2010. године.

Патент бр. **49024** чији је носилац Цвековић Зорица, Станоја Главаша 1а, 11000 Београд, RS, престао је да важи дана 16.12.2010. године.

Патент бр. **49220** чији је носилац Динић Миломир, Јаворска 4, 19000 Зајечар, RS, престао је да важи дана 28.12.2010. године.

Патент бр. **49511** чији је носилац ZENTARIS GmbH, WEISMÜLLERSTRASSE 50, 60314 FRANKFURT/ MAIN, DE, престао је да важи дана 09.12.2010. године.

Патент бр. **49787** чији је носилац BAYER CROPSCIENE AG,ALFFRED NOBEL STRASSE 50,40798 MONHEIM, DE, престао је да важи дана 09.12.2010. године.

Патент бр. **49867** чији су носици Стојановић Небојша, Пролетерска 50, 16000 Лесковац, RS, Милошевић Снежана, Доње Стопање, Јабланичка 28, RS, и Николић Дејан, Првомајска 10/41, 16000 Лесковац, RS, престао је да важи дана 07.12.2010. године.

Патент бр. **49878** чији су носици Исидоровић Ратко, Пере Сегединца 7, 11070 Нови Београд, RS, Исидоровић Јанко, Пере Сегединца 7, 11070 Нови Београд, RS, и Исидоровић Ксенија, Пере Сегединца 7, 11070 Нови Београд, RS, престао је да важи дана 19.10.2010. године.

Патент бр.**49889** чији је носилац ORION CORPORATION ORIONINTIE 1, FIN-02200 ESPOO, FI, престао је да важи дана 12.12.2010. године.

Патент бр. **50108** чији је носилац TARKETT SAS., 2, RUE DE L EGALITÉ,F-92748 NANTERRE CEDEX, FR, престао је да важи дана 23.12.2010. године.

Патент бр. **50276** чији је носилац AŽD PRAHA S.R.O. ŽIROVNIČKÁ 2/3146,106 17 PRAHA 10, CZ, престао је да важи дана 30.12.2010. године.

Патент бр. **50474** чији је носилац MERCK & CO. INC. 126 EAST LINCOLN AVENUE, RAHWAY, NJ 07065-0907, US, престао је да важи дана 15.12.2010. године.

Патент бр. **50478** чији је носиолац SCHÜCO INTERNATIONAL KG. KAROLINENSTRASSE 1-15, 33609 BIELEFELD, DE, престао је да важи дана 16.12.2010. године.

Патент бр. **50479** чији је носилац SCHÜCO INTERNATIONAL KG. KAROLINENSTRASSE 1-15,33609 BIELEFELD, DE, престао је да важи дана 16.12.2010. године.

Патент бр. **50480** чији је носилац SCHÜCO INTERNATIONAL KG. KAROLINENSTRASSE 1-15, 33609 BIELEFELD, DE, престао је дажи дана 15.12.2010. године.

Патент бр. **50482** чији је носилац SCHÜCO INTERNATIONAL KG.,KAROLINENSTRASSE 1-15,33609 BIELEFELD, DE, престао је да важи дана 16.12.2010. године.

Патент бр. **50554** чији је носилац DRESSEL PTE LTD.63 ROBINSON ROAD, 03-16 AFRO-ASIA BUILDING, SINGAPORE 068894, SG, престао је да важи дана 16.12.2010. године.

Патент бр. **50558** чији је носилац COMPARF S.R.L. VIA LEONARDO DA VINCI 12, 31044 MONTEBELLUNA, IT, престао је да важи дана 07.12.2010. године.

Патент бр. **50726** чији је носилац SANOFI-AVENTIS DEUTSCHLAND GMBH BRÜNINGSTRASSE 50, 65929 FRANKFURT AM MAIN, DE, престао је да важи дана 09.12.2010. године.

Патент бр. **50892** чији је носилац HEINEKEN TECHNICAL SERVICES B.V., 2E WETERINGPLANTSOEN 21,1017 ZD AMSTERDAM, NL, престао је да важи дана 13.12.2010. године.

Патент бр. **50933** чији је носилац F.HOFFMANN-LA ROCHE AG, 124 GRENZACHERSTRASSE, CH-4070 BASLE, CH, престао је да важи дана 08.12.2010. године.

Патент бр. **51092** чији је носилац H.LUNDBECK A/S, 9 OTTILIAVEJ, DK-2500VALBY, COPENHAGEN, DK, престао је да важи дана 19.12.2010. године.

Патент бр. **51286** чији је носилац Божић Богољуб, Ћирила и Методија 11, 15000 Шабац, RS, престао је да важи дана 29.12.2010. године.

## МАЛИ ПАТЕНТИ
PETTY PATENTS

**(51)** ***A 01 C 23/02*** (2006.01) **(11) 1209 U**
***A 01 G 29/00*** (2006.01) **(13) U**
(21) MP-2010/0101 (22) 31.12.2010.
**(54) UREĐAJ U OBLIKU CEVI ISPUNJENE TEČNIM SREDSTVOM ZA ISHRANU I/ILI ZAŠTITU BILJA**
DEVICE IN THE FORM OF TUBE FILLED WITH LIQUID AGENT FOR PLANT NUTRITION AND/OR PROTECTION
(73) KOSTIĆ, Marko, Ljubinke Bobić 1/4, 11077 Novi Beograd, RS
(72) KOSTIĆ, Marko, Ljubinke Bobić 1/4, 11077 Novi Beograd, RS
(57) Uređaj u obliku cevi ispunjene tečnim sredstvom za ishranu i/ili zaštitu bilja, **naznačen time**, što se sastoji od cevi (1) koja je sa obe strane zatvorena opnama (3a, 3b), i što je rezervoar (2), formiran od cevi (1) i opni (3a, 3b), ispunjen tečnim sredstvom (6) za ishranu i/ili zaštitu bilja.
Prijava sadrži još 2 zavisna patentna zahteva.

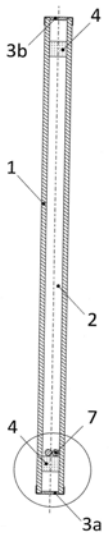


**(51)** ***A 01 K 93/00*** (2006.01) **(11) 1210 U**
**(13) U**
(21) MP-2010/0045 (22) 25.05.2010.
**(54) DVODELNI PLOVAK ZA PECANJE UDICOM**
TWO-PIECE FLOAT FOR HOOK FISHING
(73) CVETKOVIĆ, Radiša, Mariborska 18A, 18000 Niš, RS
(72) CVETKOVIĆ, Radiša, Mariborska 18A, 18000 Niš, RS
(57) Dvodelni plovak za pecanje udicom se sastoji od tela plovka (8) i fiksirane gornje antene (6) i fiksirane donje antene (7), **naznačen time**, što je telo plovka (8) horizontalno razdvojeno na gornju polovinu (1) i donju polovinu (2) tako da se gornja polovina tela plovka (1) u koju se lepkom fiksira olovo kružnog oblika (4) spaja sa donjom polovinom tela plovka (2) u koju se lepkom fiksira antena (6), tako što je kroz rupu (3) u gornjoj polovini tela plovka (1) provučena antena (6) koja vrši spajanje sa donjom polovinom tela plovka (2).
Prijava sadrži još 1 zavisan patentni zahtev.

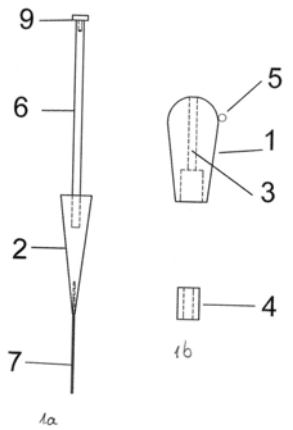


**(51)** ***A 47 J 47/16*** (2006.01) **(11) 1216 U**
***A 47 G 29/00*** (2006.01) **(13) U**
***A 47 G 29/02*** (2006.01)
(21) MP-2010/0070 (22) 19.08.2010.
**(54) DRŽAČ ZA SUNĐER I KRPU**
SPONGE AND CLOTH HOLDER
(73) JANKOVIĆ, Ivan, Vidikovački venac 14a, 11090 Beograd, RS
(72) JANKOVIĆ, Ivan, Vidikovački venac 14a, 11090 Beograd, RS
(57) Držač za sunđer i krpu **naznačen time** što se sastoji od podloge (1) na čijem donjem delu su postavljeni u jednom ili više redova međusobno razmaknuti oslonci (2).

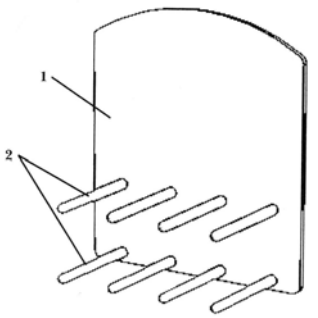

**(51)** ***A 47 L 5/05*** (2006.01) **(11) 1213 U**
***E 01 H 15/00*** (2006.01) **(13) U**
(21) MP-2011/0010 (22) 08.02.2011.
**(54) ULIČNI USISIVAČ**
STREET VACUUM CLEANER
(73) BELIT D.O.O., Obilićev Venac 18-20, 11000 Beograd, RS
(72) VASKOVIĆ, Vojkan, prof. dr, 27 marta 42, 11000 Beograd, RS
(57) Ulični usisivač, **naznačen time**, što je radno kolo kanalskog centrifugalnog ventilatora (1) preko glavčine elektromotora (14.1) i elektromotora (14) povezano sa usisnim kanalom (20) preko njega sa centrifugalnim separatorom (2) na kome je zavarena spirala (16) i na kome se nalaze cevi za odvod krupnijeg separata prašine (3) i usisnim kanalom (20) tako da čine celinu pri čemu se odvajanje nečistoća iz vazduha obavlja na mreži (11) koja se nalazi na poklopcu ususivača (15) u separatom (2) i u filtarskim džakovima (6).

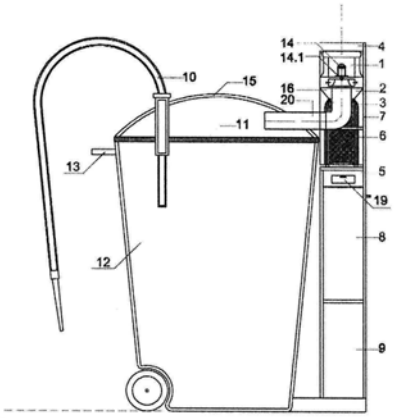

**(51)** ***A 61 N 2/06*** (2006.01) **(11) 1198 U**
***A 61 H 39/00*** (2006.01) **(13) U**
(21) MP-2010/0066 (22) 02.08.2010.
**(54) VIŠESTRUKI MAGNETNI BIOSTIMULATOR**
MULTIPLE MAGNETIC BIO STIMULATOR
(73) MIČIĆ, Vladislav, Mitropolita Pavla Nenadovića 37, 11010 Beograd, RS; MIČIĆ, Petar, Mitropolita Pavla Nenadovića 37, 11010 Beograd, RS; MIČIĆ, Boban, Mitropolita Pavla Nenadovića 37, 11010 Beograd, RS
(72) MIČIĆ, Vladislav, Mitropolita Pavla Nenadovića 37, 11010 Beograd, RS; MIČIĆ, Petar, Mitropolita Pavla Nenadovića 37, 11010 Beograd, RS; MIČIĆ, Boban, Mitropolita Pavla Nenadovića 37, 11010 Beograd, RS
(57) Višestruki magnetni biostimulator, **naznačen time**, što ga čine postolje (1), stalak (2), pomerljivi polužni nosač (3), obrazovan od paralelnih šipki (24) i (25), držač (4) teleskopskih nosača (5) sa čaurama (6) u kojima su smešteni permanentni magneti (7) postavljeni tako da jednom petinom visine prelaze obod čaura (6), pri čemu je postolje (1) uređaja izrađeno od punog metala i kroz njegovo središte je izveden stepenasti vertikalni otvor (9) koji obrazuju donji znatno širi okrugli otvor (10) i gornji cevasti otvor (11) tako da je stalak (2) umetnut u otvor (9) svojim donjim suženim krajem (12) učvršćen za postolje (1) pomoću sa gornje strane namaknutog prstenastog osigurača (13) a sa donje strane maticom (14).
Prijava sadrži još 2 zavisna patentna zahteva.

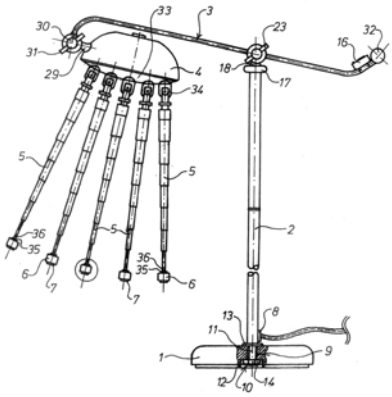

**(51)** ***B 07 B 7/08*** (2006.01) **(11) 1214 U**
***B 07 B 7/10*** (2006.01) **(13) U**
***B 05 B 15/12*** (2006.01)
(21) MP-2010/0092 (22) 09.12.2010.
**(54) LABORATORIJSKA KOMORA**
LABORATORY CHAMBER
(73) VISOKA ŠKOLA STRUKOVNIH STUDIJA BEOGRADSKA POLITEHNIKA, Brankova 17, 11000 Beograd, RS
(72) TANASKOVIĆ, Tatjana, mr, Dragoslava Srejovića 171, 11000 Beograd, RS; VARDA, Gojko, Admirala Geprata 6, 11000 Beograd, RS; VRAČAREVIĆ, Dejan, Patrijarha Joanikija 2, 11090 Beograd, RS
(57) Лабораторијска комора која се састоји од погонског агрегата (1), који се састоји од мотора и турбинског вентилатора, **назначен тиме**, што се изнад погонског агрегата (1) налази каскадна група (2) са арсорбујућим филтером (6), која је смештена испод поклопца (3) са калибрисаним отворима, док се рециркулациони канал (5) налази изнад плафона (4) и повезује погонски агрегат (1) са радним делом коморе.

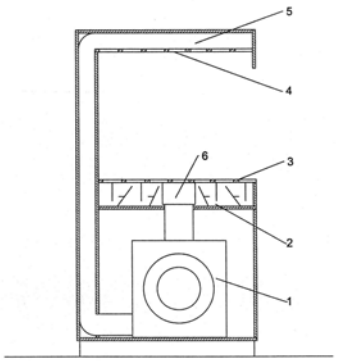

**(51)** ***B 21 D 1/12*** (2006.01) **(11) 1215 U**
**(13) U**
(21) MP-2010/0098 (22) 23.12.2010.
**(54) AUTO ŠABLON**
CAR TEMPLATE
(73) ANTIĆ, Slaviša, Ugrinovačka 103, 11272 Dobanovci, RS
(72) ANTIĆ, Slaviša, Ugrinovačka 103, 11272 Dobanovci, RS
(57) Autošablon, **naznačen time**, što se sastoji iz rama (1) na kome su montirane 4 ruke (3) raspoređene po dužim stranama rama (1), a 4 rotirajuća točka (6) raspoređena po 2 na dužoj strani rama (1) na prednjoj strani rama (1) montiran je dozer (17) sa svojim delom ustima (18) i klinovima (1.1) za osiguranje u početnom položaju za istezanje.

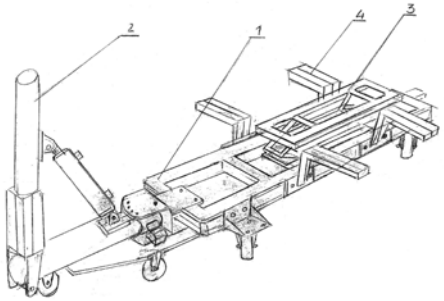


**(51)** ***B 26 D 1/26*** (2006.01) **(11) 1200 U**
***B 23 B 29/04*** (2006.01) **(13) U**
(21) MP-2010/0093 (22) 09.12.2010.
**(54) NOSAČ DLETA**
CHISEL BRACKET
(73) VISOKA ŠKOLA STRUKOVNIH STUDIJA BEOGRADSKA POLITEHNIKA, Brankova 17, 11000 Beograd, RS
(72) TANASKOVIĆ, Tatjana, mr, Dragoslava Srejovića 171, 11000 Beograd, RS; VARDA, Gojko, Admirala Geprata 6, 11000 Beograd, RS; VRAČAREVIĆ, Dejan, Patrijarha Joanikija 2, 11090 Beograd, RS
(57) Носач длета се састоји из притезне наврткe (1) постављене на централном вијку (5) која учвршћује прибор на клизну површину (13) струга доњом потисном плочом (2) и горњом потисном плочом (3), **назначен тиме**, што централни вијак (5) држи ротациони носач (4) обезбеђујући му ротационо кретање око сопствене осе, на који је постављен је хоризонтални супорт (6) са вретеном (7) супорта и вертикалним носачем (8) длета на коме се налази вијак (10) за осигурање висине длета, који учвршћује помични део вертикалног носача (9) длета на чијем се врху налази плочица (11) за причвршћење длета (14) са два вијка (12).

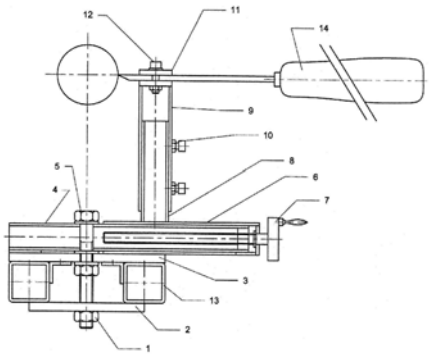


**(51)** ***B 29 B 17/00*** (2006.01) **(11) 1203 U**
**(13) U**
(21) MP-2010/0052 (22) 23.06.2010.
**(54) BOCA ZA PET AMBALAŽU SA VENTILOM I NAVOJEM NA DNU**
BOTTLE FOR PET PACKAGING WITH VALVE AND THREAD AT THE BOTTOM
(73) RABRENOVIĆ, Goran, Maršala Tita 53, 25225 Kruščić, RS
(72) RABRENOVIĆ, Goran, Maršala Tita 53, 25225 Kruščić, RS
(57) Боца за ПЕТ амбалажу са вентилом и навојем на дну, **назначена тиме**, што се састоји од тела боце (3) у које је на дну уливен комад (5) у којем се налази вентил (2) и у њега је уврнут чеп (1) дна.

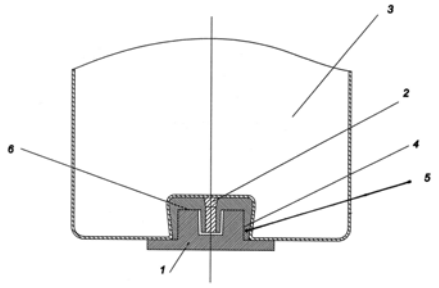


**(51)** ***B 61 G 9/00*** (2006.01) **(11) 1207 U**
***B 61 G 9/20*** (2006.01) **(13) U**
(21) MP-2010/0076 (22) 21.09.2010.
(30) CZ 23.09.2009. 20248 U1
**(54) PRIKLJUČNI ELEMENT VUČNE RUDE ZA ŽELEZNIČKA VOZILA**
DRAWBAR COUPLER FOR RAILWAY VEHICLES
(73) MSV METAL STUDÉNKA, A.S., R.Tomáška 859, 742 13 Studénka, CZ
(72) RADIM, Kolář, Alžirská 1518/10, 70800 Ostrava - Poruba, CZ
(74) VLAHOVIĆ, Slobodan, Radoja Dakića 35/32, 11070 Novi Beograd, RS

(57) Priključni element vučne rude za železnička vozila, **naznačen time**, što se vučna ruda sastoji od viljuške (1) na koju je upresovano telo (2) sa na jednom kraju rastavljivo pričvršenom glavom (3).
Prijava sadrži još 1 zavisnan patentni zahtev.

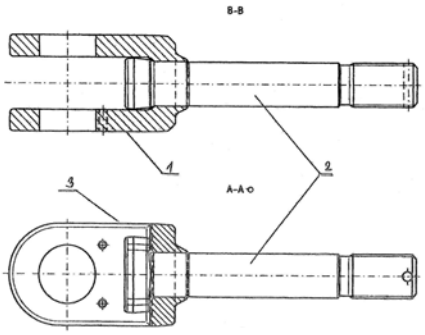


**(51)** ***B 65 B 51/14*** (2006.01) **(11) 1208 U**
***B 65 B 51/10*** (2006.01) **(13) U**
(21) MP-2010/0095 (22) 16.12.2010.
**(54) ALAT ZA ZATVARANJE KESICA NA MAŠINAMA ZA PAKOVANJE PRAŠKASTIH PROIZVODA**
BAG CLOSING DEVICE FOR POWDER PRODUCT PACKAGING MACHINES
(73) TADIĆ, Milan, Jurija Gagarina 192, 11070 Novi Beograd, RS; INJAC, Milan, Jug Bogdanova 97, 11000 Beograd, RS; ĆURČIĆ, Zoran, Cerska 81, Vračar, 11000 Beograd, RS
(72) TADIĆ, Milan, Jurija Gagarina 192, 11070 Novi Beograd, RS; INJAC, Milan, Jug Bogdanova 97, 11000 Beograd, RS; ĆURČIĆ, Zoran, Cerska 81, Vračar, 11000 Beograd, RS
(57) Алат за затварање кесица на машинама за паковање прашкастих производа се састоји од две станице, које чине носачи (2, 3, 4), са отворима(12) за температурне грејаче, чије се затварање остварује посебним механизмом друге станице, **назначен тиме**, што се у склопу прве станице, назубљене налегајуће површине (16), које су израђене на пару уметака (7) везаних за носаче (2) алата, уклапају једна у другу ради затварања дна (6) кесице (1), а налегајућа површина (14) са два испупчења у облику полуваљка, која је израђена на уметку (8) везаном за носаче (3) алата, ради затварања врха (5) кесице (1) належе на равну налегајућу површину (15), која је израђена на уметку (9) везаном за носаче (3) алата, при чему су између носача (2, 3) алата постављени разделници (17), док у склопу друге станице, који чине механизам друге станице састављен од носача (22) механизма, цилиндра (18), равни (19) за заустављање кесице (1) и полуга (21) са цилиндром (20) за затварање алата, тефлон трака (10) залепљена на носачу (4) алата належе на гумени уметак (11), који је такође залепљен на носачу (4) алата ради додатног заваривања врха (5) кесице (1).

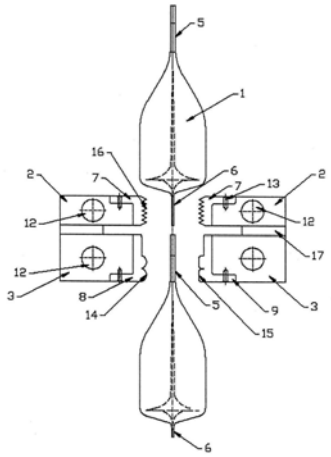


**(51)** ***B 65 G 31/04*** (2006.01) **(11) 1206 U**
***E 01 C 19/20*** (2006.01) **(13) U**
***A 01 C 17/00*** (2006.01)
(21) MP-2010/0097 (22) 21.12.2010.
**(54) MEHANIČKI RAZBACIVAČ GRANULIRANOG MATERIJALA SA DISKOVIMA**
MECHANICAL THROWING MACHINE FOR GRANULAR MATERIAL CONTAINING DISCS
(73) MIČIZ, Jožef, 29. Novembra br. 13, 24430 Ada, RS
(72) MIČIZ, Jožef, 29. Novembra br. 13, 24430 Ada, RS
(57) Mehanički razbacivač granuliranog materijala sa diskovima, sastoji se iz nosećeg rama (1) na koji je sa gornje strane pričvršćen levak (3) vijčanom vezom u tri tačke, dok je sa donje strane na noseći ram (1) pričvršćen reduktor (2), **naznačen time**, što je na donjem delu vertikalne osovine (4) reduktora (2) navučen i čvrsto vezan razbacivač (5) na kome su pričvršćene lopatice (6), što je pri vrhu vertikalne osovine (4) čvrsto navučena čaura-vodjica (10), iznad koje je čvrsto vezan mešač (9), što su gornji disk (11) i donji disk (12) navučeni na čauru-vodjicu (10) oko koje su slobodno obrtni, dok njihov položaj ograničava podloška (13) koja je osigurana uskočnikom (22), pri čemu su diskovi (11, 12) svojim uškama (11', 12'), a preko sfernih zglobova (21) i šipki (19, 20) vezani za ručke (8, 8').
Prijava sadrži još 2 zavisna patentna zahteva.

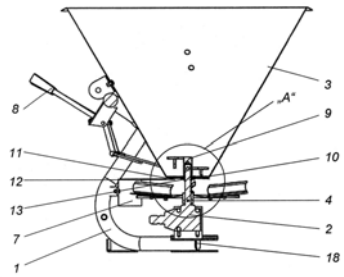

**(51)** ***B 66 F 5/04*** (2006.01) **(11) 1211 U**
***B 66 F 7/06*** (2006.01) **(13) U**
(21) MP-2010/0086 (22) 03.12.2010.
**(54) HIDRAULIČNA PLATFORMA**
HYDRAULIC PLATFORM
(73) ANTIĆ, Slaviša, Ugrinovačka 103, 11272 Dobanovci, RS
(72) ANTIĆ, Slaviša, Ugrinovačka 103, 11272 Dobanovci, RS
(57) Хидраулична платформа **назначена тиме**, што се састоји из доње платформе (2), горње платформе (1) које су повезане преко ушица (15 ) и клинова (14) за дуже (3) и краће (4) руке, а ове преко гурача руку (5) и централног гурача (7) међусобно повезане за хидраулични клип (6) а овај другим крајем преко ушица (15) и клина (14) за доњу платформу.

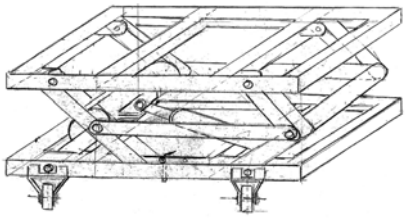

**(51)** ***B 66 F 7/00*** (2006.01) **(11) 1212 U**
***B 66 F 11/00*** (2006.01) **(13) U**
(21) MP-2010/0089 (22) 06.12.2010.
**(54) HIDRAULIČKA PLATFORMA ZA MONTAŽU I DEMONTAŽU SKLOPOVA NA VUČNIM VOZNIM SREDSTVIMA**
HYDRAULIC PLATFORM FOR ASSEMBLY MOUNTING AND DISMOUNTING ON THE TOWING TRANSPORT FACILITIES
(73) ANTIĆ, Slaviša, Ugrinovačka 103, 11272 Dobanovci, RS
(72) ANTIĆ, Slaviša, Ugrinovačka 103, 11272 Dobanovci, RS
(57) Hidraulična platforma za montažu i demontažu dijagonalne motke na vučnim voznim sredstvima, **naznačeno time**, što se sastoji iz hidraulične platforme gde je na gornjem postolju nadgrađen prihvatni alat za dijagunalnu motku, koji je preko ležaja (2) vezan zavojnim vretenom (3), a preko vođice zavojnog vretena (3a) vezan za gornje postolje hidraulične platforme preko čaura (4) i (5).

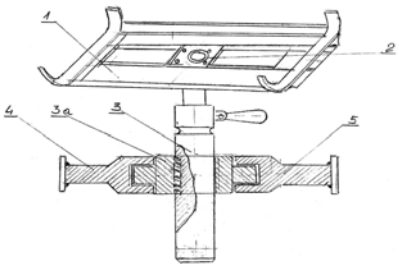


**(51)** ***D 06 F 57/06*** (2006.01) **(11) 1201 U**
**(13) U**
(21) MP-2010/0099 (22) 29.12.2010.
**(54) SKLOPIVA SUŠILICA ZA VEŠ SA VERTIKALNIM NOSAČIMA**
FOLDING LAUNDRY DRYER WITH VERTICAL SUPPORTS
(73) POPESKOVIĆ, Zoran, Sedmog jula 34, Beograd, Kaluđerica, RS; ŽIVKOVIĆ, Marijana, Pavla Pavlovića 2E, Beograd, RS; POPESKOVIĆ, Aleksandra, Sedmog jula 34, Beograd, Kaluđerica, RS
(72) POPESKOVIĆ, Zoran, Sedmog jula 34, Beograd, Kaluđerica, RS; ŽIVKOVIĆ, Marijana, Pavla Pavlovića 2E, Beograd, RS; POPESKOVIĆ, Aleksandra, Sedmog jula 34, Beograd, Kaluđerica, RS
(74) DIMITRIJEVIĆ, Slobodan, Učitelja Miloša Jankovića 2A, 11000 Beograd, RS
(57) Sklopiva sušilica za veš sa vertikalnim nosačima, prema osnovnoj varijanti izvođenja, **naznačena time**, što su pravougaoni nosači (1, 2) postavljeni vertikalno i među sobom zglobno spojeni vijcima (10) sa navrtkom, što su na svakom nosaču (1, 2) pričvršćena, preko vijaka (7) po dva točkica (6), što je na vertikalnim cevima (11, 12) nosača (1) pričvršćen veći broj kraćih šipki (4) oblika latiničnog slova "L", što je na vertikalnim cevima (21, 22) nosača (2) pričvršćen veći broj horizontalno postavljenih kraćih šipki (5), što je nosač (1) izveden od cevi (11, 12), a nosač (2) izveden od cevi (21, 22) koje su savijene u oblik ćiriličnog slova ("P") i spojene u pravougaonu formu preko osovinica (13) umetnutih u krajeve cevi, a za cevi (12, 22) pričvršćene deformacijama (14), što je rešetka (3) izvedena od šipke (30) koja je savijena u oblik ćiriličnog slova "P", na koju su popreko zavarene šipke (33) na jednakom međusobnom rastojanju, pri čemu su na sredinama šipki (30) izvedena ispupčenja (32), a njihovi krajevi savijeni za 180° formirajući zakačaljke (31), dok je na svaki par šipki 4 (u horizontalnoj ravni) zakačena po jedna zakačaljka (31) od para rešetki (3) čija su ispupčenja (32) naslonjena na naspramne šipke (5) formirajući u tri i više nivoa horizontalne površine za sušenje.
Prijava sadrži još 1 zavisan patentni zahtev.

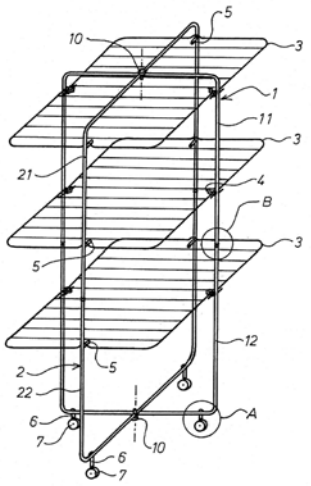

**(51)** ***E 04 H 7/30*** (2006.01) **(11) 1205 U**
**(13) U**
(21) MP-2011/0006 (22) 19.01.2011.
**(54) SILOS ZA SKLADIŠTENJE PRŽENE KAFE U ZRNU**
ROASTED COFFEE BEAN STORAGE SILO
(73) ĆURČIĆ, Zoran, Cerska 81, Vračar, 11000 Beograd, RS; TADIĆ, Milan, Jurija Gagarina 192, 11070 Novi Beograd, RS; INJAC, Milan, Jug Bogdanova 97, 22300 Inđija, RS
(72) ĆURČIĆ, Zoran, Cerska 81, Vračar, 11000 Beograd, RS; TADIĆ, Milan, Jurija Gagarina 192, 11070 Novi Beograd, RS; INJAC, Milan, Jug Bogdanova 97, 22300 Inđija, RS
(57) Силос за складиштење пржене кафе у зрну састоји се од силоса (1), смештеног на постоље (2), док се испод силоса налази механизам (5), за испуштање садржаја силоса (1), **назначен тиме**, што је на врху силоса (1) постављен вентилациони канал (3), у који је уграђен вентилатор (4) за извлачење ваздуха (7), а у доњем делу силоса (1) избушени су отвори (6) за улаз ваздуха.

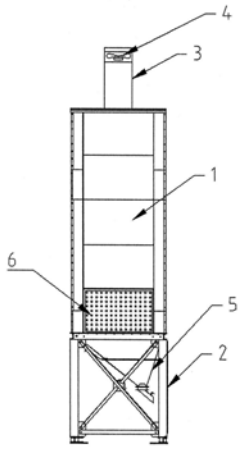


**(51)** ***E 21 D 9/10*** (2006.01) **(11) 1217 U**
**(13) U**
(21) MP-2010/0032 (22) 13.04.2010.
**(54) MAŠINA ZA BUŠENJE MALIH TUNELA**
SMALL TUNNEL BORING MACHINE
(73) PETROVIĆ, Slobodan, 15317 Donja Borina, RS
(72) PETROVIĆ, Slobodan, 15317 Donja Borina, RS
(57) Mašina za bušenje malih tunela ovalnog oblika, sastoji se od jedne gusenice (8) sa papučama profilisanim po obliku tunela a na gusenicu (8), pomoću šarnira (9) i zavrtnjeva (12) čvrsto je vezana šasija (6) tako da šasija (6) sa stubovima (21) i ovalnim krovom (22) čini celinu, i na sebi nosi čvrsto vezane: nosač glodala (3), podizač glodala (24), kofičasti elevator (2), pužni transporter (20), sito (25), levak (19), pogon pužnog transportera (18), cev za odsis (17), sedište rukovaoca (15), spremnik za plinsku bocu (27), komandni orman (14), pogon gusenice (13), pogonski motor (11) sa menjačem, reduktor (10), kardansko vratilo (7), i glodalo (1), **naznačen time**, što je u nosaču glodala (3), užljebljen klizač (4), a u klizaču (4) utisnuto glodalo (1) pri čemu se glodalo (1) slobodno okreće oko svoje ose i pomoću prirubnica, čvrsto je vezano za kardansko vratilo (7) a kardansko vratilo (7) je takođe preko prirubnica čvrsto vezano za izlaznu osovinu reduktora (10), dok je ulazna osovina reduktora (10) prirubnicama čvrsto vezana na pogonski motor (11) sa menjačem.

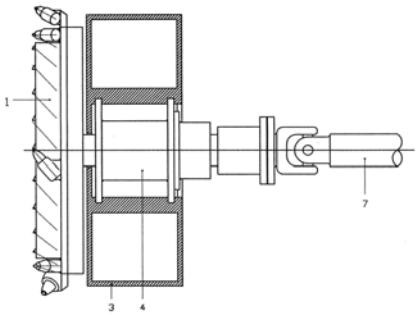


**(51)** ***F 02 N 19/04*** (2006.01) **(11) 1204 U**
***F 02 N 19/10*** (2006.01) **(13) U**
(21) MP-2010/0083 (22) 16.11.2010.
**(54) GREJAČ ZA GREJANJE RASHLADNE TEČNOSTI KOD DIZEL MOTORA**
COOLANT HEATER FOR DIESEL ENGINES
(73) NIKITOVIĆ, Milan, Dragoljuba Milovanovića-Bene 77, 34000 Kragujevac, RS; NIKITOVIĆ, Sanja, Dragoljuba Milovanovića-Bene 77, 34000 Kragujevac, RS
(72) NIKITOVIĆ, Milan, Dragoljuba Milovanovića-Bene 77, 34000 Kragujevac, RS; NIKITOVIĆ, Sanja, Dragoljuba Milovanovića-Bene 77, 34000 Kragujevac, RS
(57) Grejač za grejanje rashladne tečnosti kod dizel motora, **naznačen time**, što se u osnovi sastoji iz kućišta (1), u njemu postavljenog grejača (20), poklopca (14) i tela (23) T-cevaste spojnice postavljenog na donjem delu kućišta (1), što je unutar kućišta (1) centralno izvedena horizontalna pregrada (6) iznad koje se nalazi šupljina (12), dok se ispod pregrade (6) nalazi šupljina (5) sa glatkim zidom, što su u pregradi (6) izvedena dva kružna otvora (8) sa levkastim proširenjem na gornjoj površini (7) pregrade (6), što je na sredini pregrade (6), i to na gornjoj površini (7), izvedeno zarubljeno ojačanje (9) sa kružnim otvorom (10) u kome je uvrnut vijak (11), što se unutar kućišta (1) i iznad pregrade (6) nalazi šupljina (12) koja se završava gornjim krajem (13) koji na unutrašnjoj strani ima usek prstenastog oblika za prihvatanje kraja poklopca (14) sa uskom zavrnutom površinom (14a) na kraju, što se kućište (1) na donjem kraju završava delom (3) sa navojima na spoljašnjoj površini i čeonom ravnom horizontalnom površinom (4), što se na sredini poklopca (14) nalazi kružni otvor (15) u koji je učvršćen donji kraj cevi (16) kroz koju je provučen i učvršćen prednji kraj električnog kabla (17) koji je ispod poklopca (14) unutar šupljine (12) razdvojen i u otvorima (8) spojevima (18) spojen sa krajevima grejača (20), što se grejač (20) unutar šupljine (5) oblikuje kao spiralno savijeni

deo sa dva lučna dela, dok se izvan kućišta (1), a ispod površine (4), oblikuje kao spiralno savijeni deo sa tri lučna dela i što je na kućištu (1), odnosno, na donjem delu (3) sa navojima, preko prstenastog dela (2) navrtkom (22) zaptivno učvršćeno telo (23) T-cevaste spojnice, pri čemu su na krajeve tela (23), sa leve i desne strane pričvršćena creva sistema za hladjenje.
Prijava sadrži još 2 zavisna patentna zahteva.

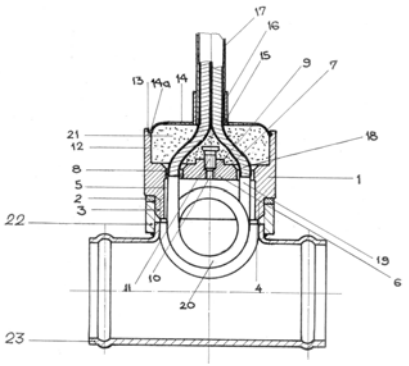

**(51)** ***G 01 N 27/62*** (2006.01) **(11) 1202 U**
***B 65 D 90/48*** (2006.01) **(13) U**
(21) MP-2010/0085 (22) 30.11.2010.
**(54) POBOLJŠANA KONSTRUKCIJA VEŠANJA MERNE ELEKTRODE KOD CILINDRIČNOG DETEKTORA ATMOSFERSKIH JONA**
IMPROVED MEASUREMENT ELECTRODE SUSPENSION STRUCTURE IN ATMOSPHERIC ION CYLINDRICAL DETECTOR
(73) KOLARŽ, Predrag, dr, Svetogorska 30, 11000 Beograd, RS
(72) KOLARŽ, Predrag, dr, Svetogorska 30, 11000 Beograd, RS
(57) Побољшана конструкција вешања мерне електроде код цилиндричног детектора атмосферских јона који се састоји од коаксијално постављене заштитне облоге (1), поларизационе (2) и мерне (3) електроде и појачавача (12), **назначена тиме**, што се врши стезањем преко safирних куглица (4) које се налазе између конусних удубљења мерне (3) електроде са једне, и фиксираног (5, 10) и покретног (9, 16) носача са конусним удубљењем са друге стране, а цео систем се фиксира притезањем вентилатора (8) који се преко прстенастог изолатора (13) и спољашњег прстена (18) шрафи за заштитну облогу (1) тј. носач вентилатора (14).

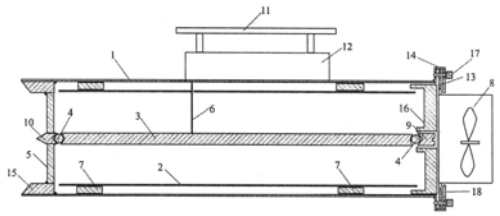

**(51)** ***G 01 N 33/487*** (2006.01) **(11) 1219 U**
**(13) U**
(21) MP-2010/0064 (22) 30.07.2010.
**(54) OBALNA MERNO-TELEKOMUNIKACIONA JEDINICA**
COASTAL MEASURING TELECOMMUNICATION UNIT
(73) INSTITUT "KIRILO SAVIĆ" A.D., Vojvode Stepe 51, 11000 Beograd, RS; "ALUXOM" D.O.O., Vojvode Baćevića 78, 11050 Beograd, RS
(72) VUKIĆ, Marija, Kneza Miloša 42, 11000 Beograd, RS; RAPAJIĆ, Vojislav, Milutina Milankovića 32, 11070 Novi Beograd, RS; ŠTETIN, Radovan, Ljutice Bogdana 2/3, 11000 Beograd, RS
(74) TOMAŠEVIĆ, Slavica, Bulevar Kralja Aleksandra 99, 11000 Beograd, RS
(57) Обална мерно телекомуникациона јединица **назначена тиме** што се састоји од: мерних сонди (1), кућишта водонепропусне кутије са водонепропуснм кабловским уводницима (2), прекидача (3). исправљача (4), електронског склопа за претварање измерених података у одговарајући електрични сигнал (трансдуктора) (5), модема за пренос података на даљину (6), ГПС антене (7), ГПРС антене (8) и спојне летве (сабирнице) (9).

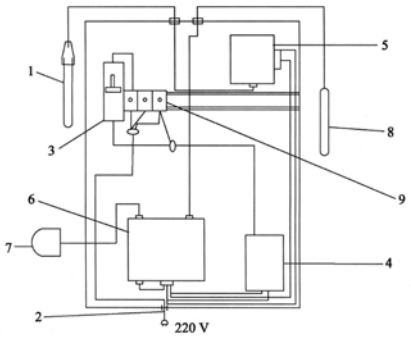


**(51)** ***G 01 P 5/07*** (2006.01) **(11) 1199 U**
**(13) U**
(21) MP-2010/0080 (22) 20.10.2010.
**(54) UREĐAJ ZA MERENJE VREMENA RADNOG HODA PNEUMATSKOG CILINDRA**
DEVICE FOR MEASUREMENT OF PNEUMATIC CYLINDER POWER STROKE TIME INTERVAL
(73) ANTIĆ, Branko, Karađorđeva 31, 34000 Kragujevac, RS
(72) ANTIĆ, Branko, Karađorđeva 31, 34000 Kragujevac, RS
(57) Уређај за мерење времена радног хода pneumatskog cilindra је **naznačen time** da mikrokontroler (2) na osnovu vrednosti pritisaka na priključcima (29) pneumatskog cilindra (30) određuje vreme za koje se obavi pun radni hod cilindra.

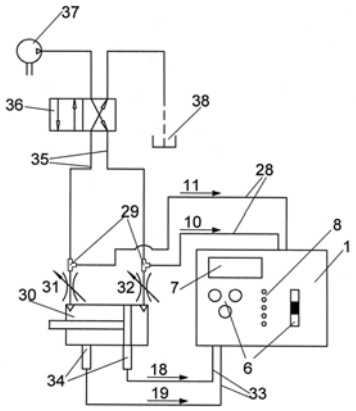


**(51)** ***H 02 J 4/00*** (2006.01) **(11) 1218 U**
**(13) U**
(21) MP-2010/0063 (22) 30.07.2010.
**(54) UNIVERZALNA RAZVODNA AKUMULATORSKA KUTIJA**
UNIVERSAL BATTERY BOX
(73) INSTITUT "KIRILO SAVIĆ" A.D., Vojvode Stepe 51, 11000 Beograd, RS; "ALUXOM" D.O.O., Vojvode Baćevića 78, 11050 Beograd, RS
(72) VUKIĆ, Marija, Kneza Miloša 42, 11000 Beograd, RS; RAPAJIĆ, Vojislav, Milutina Milankovića 32, 11070 Novi Beograd, RS; ŠTETIN, Radovan, Ljutice Bogdana 2/3, 11000 Beograd, RS
(74) TOMAŠEVIĆ, Slavica, Bulevar Kralja Aleksandra 99, 11000 Beograd, RS
(57) Универзална разводна акумулаторска кутија **назначена тиме** што се састоји од: кућишта кутије, са водонепропусним кабловским уводницима (5), (6) и (7), акумулатора 12 V или 24V (1), регулатора напајања соларног панела (2), исправљача са 220 V AC на 12V DC (3), преклопника за избор напајања 12V или 24 V DC (4). електронских компоненти са диодама за заштиту појединих склопова у кутији од преоптерећења и прикључења погрешног поларитета напона (8) и (10) и сабирне летве (9).

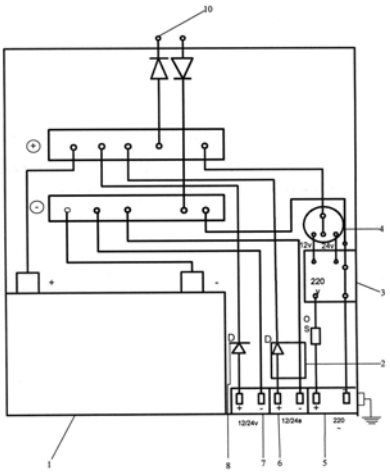

# ИНДЕКСНЕ ТАБЕЛЕ ЗА МАЛЕ ПАТЕНТЕ

# INDEX TABLES FOR PETTY PATENTS


- **ИНДЕКС НОСИЛАЦА МАЛИХ ПАТЕНАТА (стр. 2359)**
- PETTY PATENT OWNER INDEX (p. 2359)

- **ИНДЕКС БРОЈЕВА МАЛИХ ПАТЕНАТА (стр. 2360)**
- PETTY PATENT NUMBER INDEX (p. 2360)

- **ИНДЕКС БРОЈЕВА МАЛИХ ПАТЕНАТА ПРЕМА МКП (стр. 2361)**
- INDEX OF PETTY PATENTS ACCORDING TO IPC (p. 2361)

## ИНДЕКС НОСИЛАЦА МАЛИХ ПАТЕНАТА

PETTY PATENT OWNER INDEX

| (73) | (51) | | (21) | (30) | (11) |
|---|---|---|---|---|---|
| ANTIĆ, Branko | ***G 01 P 5/07*** | (2006.01) | MP-2010/0080 | | 1199 U |
| ANTIĆ, Slaviša | ***B 66 F 5/04***<br>***B 66 F 7/06*** | (2006.01)<br>(2006.01) | MP-2010/0086 | | 1211 U |
| ANTIĆ, Slaviša | ***B 66 F 7/00***<br>***B 66 F 11/00*** | (2006.01)<br>(2006.01) | MP-2010/0089 | | 1212 U |
| ANTIĆ, Slaviša | ***B 21 D 1/12*** | (2006.01) | MP-2010/0098 | | 1215 U |
| BELIT D.O.O. | ***A 47 L 5/05***<br>***E 01 H 15/00*** | (2006.01)<br>(2006.01) | MP-2011/0010 | | 1213 U |
| CVETKOVIĆ, Radiša | ***A 01 K 93/00*** | (2006.01) | MP-2010/0045 | | 1210 U |
| INSTITUT "KIRILO SAVIĆ" A.D. и "ALUXOM" D.O.O. | ***H 02 J 4/00*** | (2006.01) | MP-2010/0063 | | 1218 U |
| INSTITUT "KIRILO SAVIĆ" A.D. и "ALUXOM" D.O.O. | ***G 01 N 33/487*** | (2006.01) | MP-2010/0064 | | 1219 U |
| JANKOVIĆ, Ivan | ***A 47 J 47/16***<br>***A 47 G 29/00***<br>***A 47 G 29/02*** | (2006.01)<br>(2006.01)<br>(2006.01) | MP-2010/0070 | | 1216 U |
| KOLARŽ, Predrag, dr. | ***G 01 N 27/62***<br>***B 65 D 90/48*** | (2006.01)<br>(2006.01) | MP-2010/0085 | | 1202 U |
| KOSTIĆ, Marko | ***A 01 C 23/02***<br>***A 01 G 29/00*** | (2006.01)<br>(2006.01) | MP-2010/0101 | | 1209 U |
| MIČIĆ, Vladislav; MIČIĆ, Petar и MIČIĆ, Boban | ***A 61 N 2/06***<br>***A 61 H 39/00*** | (2006.01)<br>(2006.01) | MP-2010/0066 | | 1198 U |
| MIČIZ, Jožef | ***B 65 G 31/04***<br>***E 01 C 19/20***<br>***A 01 C 17/00*** | (2006.01)<br>(2006.01)<br>(2006.01) | MP-2010/0097 | | 1206 U |
| MSV METAL STUDÉNKA, A.S. | ***B 61 G 9/00***<br>***B 61 G 9/20*** | (2006.01)<br>(2006.01) | MP-2010/0076 | CZ 23.09.2009. 20248 U1 | 1207 U |
| NIKITOVIĆ, Milan и NIKITOVIĆ, Sanja | ***F 02 N 19/04***<br>***F 02 N 19/10*** | (2006.01)<br>(2006.01) | MP-2010/0083 | | 1204 U |
| PETROVIĆ, Slobodan | ***E 21 D 9/10*** | (2006.01) | MP-2010/0032 | | 1217 U |
| POPESKOVIĆ, Zoran; ŽIVKOVIĆ, Marijana и POPESKOVIĆ, Aleksandra | ***D 06 F 57/06*** | (2006.01) | MP-2010/0099 | | 1201 U |
| RABRENOVIĆ, Goran | ***B 29 B 17/00*** | (2006.01) | MP-2010/0052 | | 1203 U |
| TADIĆ, Milan; INJAC, Milan и ĆURČIĆ, Zoran | ***E 04 H 7/30*** | (2006.01) | MP-2011/0006 | | 1205 U |

| (73) | (51) | (21) | (30) | (11) |
|---|---|---|---|---|
| TADIĆ, Milan; INJAC, Milan и ĆURČIĆ, Zoran | ***B 65 B 51/14*** (2006.01)<br>***B 65 B 51/10*** (2006.01) | MP-2010/0095 | | 1208 U |
| VISOKA ŠKOLA STRUKOVNIH STUDIJA BEOGRADSKA POLITEHNIKA | ***B 26 D 1/26*** (2006.01)<br>***B 23 B 29/04*** (2006.01) | MP-2010/0093 | | 1200 U |
| VISOKA ŠKOLA STRUKOVNIH STUDIJA BEOGRADSKA POLITEHNIKA | ***B 07 B 7/08*** (2006.01)<br>***B 07 B 7/10*** (2006.01)<br>***B 05 B 15/12***(2006.01) | MP-2010/0092 | | 1214 U |

## ИНДЕКС БРОЈЕВА МАЛИХ ПАТЕНАТА

PETTY PATENT NUMBER INDEX

| (11) | (51) |
|---|---|
| 1198 U | ***A 61 N 2/06*** (2006.01)<br>***A 61 H 39/00*** (2006.01) |
| 1199 U | ***G 01 P 5/07*** (2006.01) |
| 1200 U | ***B 26 D 1/26*** (2006.01)<br>***B 23 B 29/04*** (2006.01) |
| 1201 U | ***D 06 F 57/06*** (2006.01) |
| 1202 U | ***G 01 N 27/62*** (2006.01)<br>***B 65 D 90/48*** (2006.01) |
| 1203 U | ***B 29 B 17/00*** (2006.01) |
| 1204 U | ***F 02 N 19/04*** (2006.01)<br>***F 02 N 19/10*** (2006.01) |
| 1205 U | ***E 04 H 7/30*** (2006.01) |
| 1206 U | ***B 65 G 31/04*** (2006.01)<br>***E 01 C 19/20*** (2006.01)<br>***A 01 C 17/00*** (2006.01) |
| 1207 U | ***B 61 G 9/00*** (2006.01)<br>***B 61 G 9/20*** (2006.01) |
| 1208 U | ***B 65 B 51/14*** (2006.01)<br>***B 65 B 51/10*** (2006.01) |

| (11) | (51) |
|---|---|
| 1209 U | ***A 01 C 23/02*** (2006.01)<br>***A 01 G 29/00*** (2006.01) |
| 1210 U | ***A 01 K 93/00*** (2006.01) |
| 1211 U | ***B 66 F 5/04*** (2006.01)<br>***B 66 F 7/06*** (2006.01) |
| 1212 U | ***B 66 F 7/00*** (2006.01)<br>***B 66 F 11/00*** (2006.01) |
| 1213 U | ***A 47 L 5/05*** (2006.01)<br>***E 01 H 15/00*** (2006.01) |
| 1214 U | ***B 07 B 7/08*** (2006.01)<br>***B 07 B 7/10*** (2006.01)<br>***B 05 B 15/12*** (2006.01) |
| 1215 U | ***B 21 D 1/12*** (2006.01) |
| 1216 U | ***A 47 J 47/16*** (2006.01)<br>***A 47 G 29/00*** (2006.01)<br>***A 47 G 29/02*** (2006.01) |
| 1217 U | ***E 21 D 9/10*** (2006.01) |
| 1218 U | ***H 02 J 4/00*** (2006.01) |
| 1219 U | ***G 01 N 33/487*** (2006.01) |

## ИНДЕКС БРОЈЕВА МАЛИХ ПАТЕНАТА ПРЕМА МКП

INDEX OF PETTY PATENTS ACCORDING TO IPC

| (51) | | (11) |
|---|---|---|
| ***A 01 C 17/00*** | (2006.01) | 1206 U |
| ***A 01 C 23/02*** | (2006.01) | 1209 U |
| ***A 01 G 29/00*** | (2006.01) | 1209 U |
| ***A 01 K 93/00*** | (2006.01) | 1210 U |
| ***A 47 G 29/00*** | (2006.01) | 1216 U |
| ***A 47 G 29/02*** | (2006.01) | 1216 U |
| ***A 47 J 47/16*** | (2006.01) | 1216 U |
| ***A 47 L 5/05*** | (2006.01) | 1213 U |
| ***A 61 H 39/00*** | (2006.01) | 1198 U |
| ***A 61 N 2/06*** | (2006.01) | 1198 U |
| ***B 05 B 15/12*** | (2006.01) | 1214 U |
| ***B 07 B 7/08*** | (2006.01) | 1214 U |
| ***B 07 B 7/10*** | (2006.01) | 1214 U |
| ***B 21 D 1/12*** | (2006.01) | 1215 U |
| ***B 23 B 29/04*** | (2006.01) | 1200 U |
| ***B 26 D 1/26*** | (2006.01) | 1200 U |
| ***B 29 B 17/00*** | (2006.01) | 1203 U |
| ***B 61 G 9/00*** | (2006.01) | 1207 U |
| ***B 61 G 9/20*** | (2006.01) | 1207 U |

| (51) | | (11) |
|---|---|---|
| ***B 65 B 51/14*** | (2006.01) | 1208 U |
| ***B 65 D 90/48*** | (2006.01) | 1202 U |
| ***B 65 G 31/04*** | (2006.01) | 1206 U |
| ***B 66 F 5/04*** | (2006.01) | 1211 U |
| ***B 66 F 7/00*** | (2006.01) | 1212 U |
| ***B 66 F 7/06*** | (2006.01) | 1211 U |
| ***B 66 F 11/00*** | (2006.01) | 1212 U |
| ***D 06 F 57/06*** | (2006.01) | 1201 U |
| ***E 01 C 19/20*** | (2006.01) | 1206 U |
| ***E 01 H 15/00*** | (2006.01) | 1213 U |
| ***E 04 H 7/30*** | (2006.01) | 1205 U |
| ***E 21 D 9/10*** | (2006.01) | 1217 U |
| ***F 02 N 19/04*** | (2006.01) | 1204 U |
| ***F 02 N 19/10*** | (2006.01) | 1204 U |
| ***G 01 N 27/62*** | (2006.01) | 1202 U |
| ***G 01 N 33/487*** | (2006.01) | 1219 U |
| ***G 01 P 5/07*** | (2006.01) | 1199 U |
| ***H 02 J 4/00*** | (2006.01) | 1218 U |

ПРЕСТАНАК ВАЖНОСТИ РЕГИСТРОВАНИХ МАЛИХ ПАТЕНАТА

## Termination of validity of Registred Petty Patents

**1. Због неплаћања таксе за одржавање права у периоду од 06.12.2010. до 05.02.2011. године:**

Мали патент бр. **791** чији је носилац Јеринкић Божидар, Кнеза Милоша 22/V-20, 34000 Крагујевац, RS , престао је да важи дана 10.12.2010. године.

Мали патент бр. **822** чији је носилац Стаменковић Јован, Раковичка 2/8, 11000 Београд, RS, престао је да важи дана 15.12.2010. године.

Мали патент бр. **863** чији је носилац Стаменковић Јован, Раковичка 2/8, 11000 Београд, RS, престао је да важи дана 10.01.2011. године.

Мали патент бр. **997** чији је носиолац Петровић Бранислав, Малешка 29, 11000 Београд, RS, престао је да важи дана 26.12.2010. године.

Мали патент бр. **1013** чији је носилац Јовановић Мирољуб, Булевар Немањића 3/30, 18000 Ниш, RS, престао је да важи дана 30.121.2010. године.

Мали патент бр. **1049** чији је носилац Керечки Слободан, Мајора Зорана Радосављевића 159, 11273 Земун, RS, престао је да важи дана 16.12.2010. године.

Мали патент бр. **1070** чији је носилац Јовановић Миодраг, Слободана Берберског Лале 1ж, 11000 Београд, RS, престао је да важи дана 13.12.2010. године.

Мали патент бр. **1071** чији је носилац Јовановић Миодраг, Слободана Берберског Лале 1ж, 11000 Београд, RS, престао је да важи дана 19.12.2010. године.

Мали патент бр. **1072** чији је носилац Јовановић Миодраг, Слободана Берберског Лале 1ж, 11000 Београд, RS, престао је да важи дана 26.12.2010. године.

# ЗАХТЕВИ ЗА ПРОШИРЕЊЕ ЕВРОПСКИХ ПРИЈАВА ПАТЕНАТА

## Requests for the Extension of the effects of European Patent Applications

### Објава захтева за проширење европских пријава патената - библиграфски подаци

### Publication of Requests for the Extension of the effects of European Patent Applications

### Индекси захтева за проширење европских пријава патената – бројеви, подносиоци и класификационе ознаке

### Indexes of Requests for the Extension of the effects of European Patent Applications – Numbers, Applicants and Clasification Symbols

### Објава повучених захтева за проширење европских пријава патената

### Publication of withdrawn applications for the Ehtension of the effects of European Patent Applications

### Индекси повучених захтева за проширење европских пријава патената – бројеви, подносиоци и класификационе ознаке

### Indexes of withdrawn applications for the Ehtension of the effects of European Patent Applications – Numbers, Applicants and Clasification Symbols

**МЕЂУНАРОДНИ КОДОВИ ЗА ИДЕНТИФИКАЦИЈУ БИБЛИОГРАФСКИХ ПОДАТАКА ПАТЕНАТА -WIPO ST. 9**

RECOMMENDATION CONCERNING BIBLIOGRAPHIC DATA ON AND RELATING TO PATENTS - **WIPO ST. 9**

| | | | |
|---|---|---|---|
| **(51)** | **Класификациона ознака по Међународној класификацији патената** | | **Број објаве европске пријаве патента** |
| (23) | Датум повлачења/одбијања захтева | | |
| (30) | Подаци о праву првенства међународне пријаве патента | | |
| (86) | Број и датум подношења међународне пријаве патента | | |
| (96) | Број европске пријаве патента, датум подношења и језик на којем је пријава поднета | | |
| (87) | Број и датум међународне објаве пријаве патента | | |
| (97) | Број објаве европске пријаве патента, датум објаве и језик на којем је пријава објављена | | |
| (41) | Датум када је податак постао доступан јавности | | |
| **(54)** | **Назив проналаска на енглеском језику** | | |
| (71) | Подаци о подносиоцу пријаве | | |
| (72) | Подаци о проналазачу | | |
| (74) | Подаци о пуномоћнику | | |

* Међународне пријаве које се објављују према члану 21. Уговора о сарадњи у области пријава патената (PCT Ugovor) у смислу става 1. члана 158. Европске патентне конвенције (EURO-PCT prijave) означене су звездицом.

У овом броју Гласника објављујемо:

**објаве захтеве за проширење европских пријава патената за Републику Србију** и **објаве повучених захтева за проширење европских пријава патената за Републику Србију** из ***EPO Patent Bulletin*** **бр. 21/2011 –28/2011 (2011–03–16** до **2011–07–13)**.

– Више података о пријавама можете наћи у **European Patent Bulletin** (службено гласило Европског патентног завода) у склопу INID кода (97).

## ОБЈАВА ЗАХТЕВА ЗА ПРОШИРЕЊЕ ЕВРОПСКИХ ПРИЈАВА ПАТЕНАТА

**(51) (8)** **EP 2238818**
***A 01B 3/42***
***A 01B 3/46***
(30) FR 08.04.2009. 0952293
(96) EP 10159287.1 08.04.2010. Fr
(97) EP 2238818 13.10.2010. 201041 Fr
**(54) Reversible plough with a device for reducing the pressure**
(71) Kuhn-Huard S.A., Zone Industrielle, 44142 Ch?teaubriant, FR
(72) Guermont, Jean-François, La Hunaudire, 44590, Sion Les Mines, FR;
Herault, Vincent, La Drutire, 44470, Mauves Sur Loire, FR
(74) Andres, Jean-Claude, KUHN S.A., 4, Impasse des Fabriques, 67700 Saverne, FR

**(51) (8)** **EP 2250871**
***A 01D 41/127***
(30) US 11.05.2009. 463747
(96) EP 10159577.5 12.04.2010. En
(97) EP 2250871 17.11.2010. 201046 En
**(54) Scalable grain tank fill level display**
(71) Deere & Company, One John Deere Place, Moline, IL 61265-8098, US
(72) Chervenka, Kirk, Jacob, 3627 Woodberry Ct., Bettendorf, IA 52722, US;
Stevens, Barton J, 2952 Grandview DR., Bettendorf, IA 52722, US;
Wood, Joshua D, 17229 70th Street West, Reynolds, IL 61279, US;
Schleicher, Tyler D, 537 NW Scott Street, Ankeny, IA 50023, US
(74) Holst, Sönke, Deere & Company, European Office, Global Intellectual Property Services, John-Deere-Straße 70, 68163 Mannheim, DE

**(51) (8)** **EP 2328405 ***
***A 01H 5/00***
***C 12N 15/82***
***C 12N 5/10***
(30) US 29.08.2008. 190581 P
(86) PCT/US2009055555 31.08.2009.
(96) EP 09810727.9 31.08.2009. En
(87) WO2010025465 04.03.2010. 201009
(97) EP 2328405 08.06.2011. 201123 En
**(54) PLANT GLUTAMINE PHENYLPYRUVATE TRANSAMINASE GENE AND TRANSGENIC PLANTS CARRYING SAME**
(71) Los Alamos National Security, LLC, Los Alamos National Laboratory, LC/IP, MS A187, Los Alamos, NM 87545, US;
University of Maine System Board of Trustees, 16 Central Street, Bangor, ME 04401, US
(72) UNKEFER, Pat J., 2 Jemez Lane, Los Alamos, New Mexico 87544, US;
ANDERSON, Penelope S., 3245 B Walnut, Los Alamos, New Mexico 87544, US;
KNIGHT, Thomas J., P.O. Box 382, Raymond, Maine 04701, US
(74) Marshall, Cameron John, et al, Carpmaels & Ransford, One Southampton Row, London, WC1B 5HA, GB

**(51) (8)** **EP 2334166 ***
***A 01H 5/00***
(30) US 29.08.2008. 190520 P
(86) PCT/US2009055557 31.08.2009.
(96) EP 09810728.7 31.08.2009. En
(87) WO2010025466 04.03.2010. 201009
(97) EP 2334166 22.06.2011. 201125 En
**(54) TRANSGENIC PLANTS WITH ENHANCED GROWTH CHARACTERISTICS**
(71) Los Alamos National Security, LLC, Los Alamos National Laboratory, LC/IP, MS A187, Los Alamos, NM 87545, US;
University of Maine System Board of Trustees, 16 Central Street, Bangor, ME 04401, US
(72) UNKEFER, Pat J., 2 Jemez Lane, Los Alamos, New Mexico 87544, US;
ANDERSON, Penelope S., 3245 B Walnut, Los Alamos, New Mexico 87544, US;
KNIGHT, Thomas J., P.O. Box 382, Raymond, Maine 04701, US
(74) Marshall, Cameron John, Carpmaels & Ransford, One Southampton Row, London WC1B 5HA, GB

**(51) (8)** **EP 2337444 ***
***A 01K 11/00***
(30) IT 26.09.2008. RM20080512
(86) PCT/IT2009000439 28.09.2009.
(96) EP 09760014.2 28.09.2009. It
(87) WO2010035305 01.04.2010. 201013
(97) EP 2337444 29.06.2011. 201126 En
**(54) HIGH SPEED SYSTEM FOR ELECTRONIC IDENTIFICATION OF LIVESTOCK**
(71) Royal Tag SA, Via Pioda, 5, 6900 Lugano, CH
(72) BIONDI, Andrea, Piazza Alcide de Gasperi, 2, 00038 Valmontone (RM), IT
(74) Santi, Filippo, et al, Barzanò & Zanardo Roma S.p.A., Via Piemonte 26, I-00187 Roma, IT

**(51) (8)** **EP 2337449 ***
***A 01N 1/02***
(30) EP 13.08.2008. 08162339
(86) PCT/EP2009060527 13.08.2009.
(96) EP 09781831.4 13.08.2009. En
(87) WO2010018219 18.02.2010. 201007
(97) EP 2337449 29.06.2011. 201126 En
**(54) METHOD AND INSTRUMENT FOR VITRIFICATION AND STORING OF BIOLOGICAL SPECIMEN**
(71) IVF Zentren Prof. Zech Bregenz GmbH, Römerstrasse 2, 6900 Bregenz, AT
(72) ZECH, Nicolas, Grundreuteweg 12, 6900 Bregenz, AT
(74) Burger, Hannes, Anwälte Burger & Partner, Rechtsanwalt GmbH, Rosenauerweg 16, A-4580 Windischgarsten, AT

**(51) (8)** **EP 2326169 ***
***A 01N 25/04***
***A 01N 47/36***
***A 01N 43/40***
***A 01N 43/60***
***A 01N 57/20***
***A 01N 39/04***
***A 01N 37/10***
***A 01N 43/90***
***A 01N 47/30***
***A 01N 37/40***
***A 01N 39/02***
***A 01N 37/48***
***A 01N 43/653***
***A 01N 41/10***
***A 01N 43/80***
(86) PCT/EP2008004242 28.05.2008.
(96) EP 08758826.5 28.05.2008. En
(87) WO2009152827 23.12.2009. 200952
(97) EP 2326169 01.06.2011. 201122 En
**(54) SUSPENSION CONCENTRATES IN OIL OF SULFONYLUREAS AND COMBINATIONS WITH FLUROXYPYR OR OTHER AGROCHEMICALS**
(71) GAT Microencapsulation AG, Gewerbezone 1, 2490 Ebenfurth, AT
(72) CASAAA GINER, Victor, Gewerbezone 1, 2490 Ebenfurth, AT;
GIMENO SIERRA, Bárbara, Gewerbezone 1, 2490 Ebenfurth, AT;
GIMENO SIERRA, Miguel, Gewerbezone 1, 2490 Ebenfurth, AT
(74) Soler Lerma, Santiago, Iniciativa y Registro Operativo S.L., International Department, C/Poeta Querol nº1 pta 10, 46900 Valencia, ES

**(51) (8)** **EP 1965638 ***
***A 01N 25/28***
***A 01N 25/04***
***A 01N 51/00***
***A 01P 7/04***
(30) GB 23.12.2005. 0526416
(86) PCT/GB2006004902 22.12.2006.
(96) EP 06831460.8 22.12.2006. En
(87) WO2007072046 28.06.2007. 200726
(97) EP 1965638 10.09.2008. 200837 En
**(54) Sustained-release microcapsules**
(71) Syngenta Limited, European Regional Centre, Priestley Road, Surrey Research Park, Guildford, Surrey GU2 7YH, GB
(72) MULQUEEN, Patric, Joseph, Syngenta Limited, Jealott's Hill International Research Centre, Bracknell, Berkshire RG42 6EY, GB;
WALLER, Anne, Syngenta Limited, Jealott's Hill International Research Centre, Bracknell, Berkshire RG42 6EY, GB;
SHIRLEY, Ian, Malcolm, Syngenta Limited, Jealott's Hill International Research Centre, Bracknell, Berkshire RG42 6EY, GB;
CHAVANT, Michael, Syngenta Crop Protection Muenchwilen AG, Breitenloh 5, CH-4333 Meunchwilen, CH
(74) Osborn, Martin Keith, et al, Syngenta Limited, Intellectual Property Department, Jealott's Hill International Research Centre, Bracknell, Berkshire RG42 6YA, GB

**(51) (8)** **EP 2288257 ***
***A 01N 25/28***
***B 01J 13/04***
***B 01J 13/14***
***A 01P 7/04***
(30) GB 13.03.2008. 0804700
(86) PCT/GB2009000680 13.03.2009.
(96) EP 09700032.7 13.03.2009. En
(87) WO2009063257 22.05.2009. 200921
(97) EP 2288257 02.03.2011. 201109 En
**(54) MICROENCAPSULATION PROCESS FOR PRODUCING MICROCAPSULES COMPRISING A SURFACE-MODIFIED PARTICULATE INORGANIC MATERIAL IN A CROSS-LINKED MICROCAPSULE WALL**
(71) Syngenta Limited, European Regional Centre, Priestley Road, Surrey Research Park, Guildford, Surrey GU2 7YH, GB
(72) MULQUEEN, Patrick, Joseph, Syngenta Limited, Jealott's Hill International Research Centre, Bracknell, Berkshire RG42 6EY, GB;
TAYLOR, Philip, Syngenta Limited, Jealott's Hill International Research Centre, Bracknell, Berkshire RG42 6EY, GB;
GITTINS, David, Ian, Par Moor Centre, St Austell PL24 2SQ, GB
(74) Osborn, Martin Keith, et al, Syngenta Limited, Intellectual Property Department, Jealott's Hill International Research Centre, Bracknell, Berkshire RG42 6YA, GB

**(51) (8)** **EP 2334174 ***
***A 01N 33/18***
***A 01N 43/50***
***A 01N 25/04***
***A 01P 13/00***
(30) EP 26.09.2008. 08165282
(86) PCT/EP2009062441 25.09.2009.
(96) EP 09783418.8 25.09.2009. De
(87) WO2010034808 01.04.2010. 201013
(97) EP 2334174 22.06.2011. 201125 De
**(54) LIQUID ACTIVE INGREDIENT CONCENTRATES THAT CAN BE EMULSIFIED IN WATER**
(71) BASF SE, 67056 Ludwigshafen, DE
(72) KRAPP, Michael, Ahornweg 4, 67122 Altrip, DE;
KOLB, Klaus, Speyerer Str. 93, 67105 Schifferstadt, DE;
SEAMAN, Graham, 33 Ilex Crescent, Southampton, Locks Heath, Hampshire SO31 6SE, GB
(74) Reitstötter - Kinzebach, Patentanwälte, Ludwigsplatz 4, 67059 Ludwigshafen, DE

**(51) (8)** **EP 2326172 ***
***A 01N 37/18***
(30) US 12.08.2008. 136106 P
(86) PCT/US2009004557 07.08.2009.
(96) EP 09806944.6 07.08.2009. En
(87) WO2010019203 18.02.2010. 201007
(97) EP 2326172 01.06.2011. 201122 En
**(54) ANTIFUNGAL AGENTS**
(71) Merck Sharp & Dohme Corp., 126 East Lincoln Avenue, Rahway, NJ 07065-0900, US
(72) GREENLEE, Mark, L., Merck Sharp & Dohme Corp., 126 East Lincoln Avenue, Rahway, NJ 07065, US;
WILKENING, Robert, Merck Sharp & Dohme Corp., 126 East Lincoln Avenue, Rahway, NJ 07065, US;

APGAR, James, Merck Sharp & Dohme Corp., 126 East Lincoln Avenue, Rahway, NJ 07065, US;
WILDONGER, Kenneth, James, Merck Sharp & Dohme Corp., 126 East Lincoln Avenue, Rahway, NJ 07065, US;
MENG, Dongfang, Merck Sharp & Dohme Corp., 126 East Lincoln Avenue, Rahway, NJ 07065, US;
PARKER, Dann, L, Jr., Merck Sharp & Dohme Corp., 126 East Lincoln Avenue, Rahway, NJ 07065, US
(74) Harris, Jennifer Lucy, et al, Kilburn & Strode LLP, 20 Red Lion Street, London WC1R 4PJ, GB

**(51) (8)** **EP 2334178 ***
***A 01N 37/36***
(30) US 03.10.2008. 102807 P
US 30.10.2008. 109708 P
(86) PCT/US2009059458 02.10.2009.
(96) EP 09818602.6 02.10.2009. En
(87) WO2010040113 08.04.2010. 201014
(97) EP 2334178 22.06.2011. 201125 En
**(54) COMPOSITIONS AND METHODS FOR THE TREATMENT OF BOWEL DISEASES WITH GRANULATED MESALAMINE**
(71) Dr. Falk Pharma Gmbh, Leinenweberstrasse 5, 79108 Freiburg, DE
(72) FORBES, William, 1008 Heydon Court, Raleigh, NC 27614, US
(74) Keller, Günter, et al, Lederer & Keller, Patentanwälte, Unsöldstrasse 2, 80538 München, DE

**(51) (8)** **EP 2280602 ***
***A 01N 43/10***
***A 01N 43/56***
***A 01N 43/42***
(30) EP 29.04.2008. 08155351
(86) PCT/EP2009055093 28.04.2009.
(96) EP 09738127.1 28.04.2009. De
(87) WO2009133083 05.11.2009. 200945
(97) EP 2280602 09.02.2011. 201106 De
**(54) HERBICIDE MIXTURE**
(71) BASF SE, 67056 Ludwigshafen, DE
(72) KOLB, Klaus, Speyerer Str.93, 67105 Schifferstadt, DE;
GREGORI, Wolfgang, Königsbacher Str.58, 67067 Ludwigshafen, DE;
KRAPP, Michael, Ahornweg 4, 67122 Altrip, DE;
GRIVEAU, Yannick, Otto-Hess-Str. 27, 67346 Speyer, DE

**(51) (8)** **EP 2330899 ***
***A 01N 43/40***
***A 61K 31/445***
(30) US 21.08.2008. 90632 P
(86) PCT/US2009054563 21.08.2009.
(96) EP 09808853.7 21.08.2009. En
(87) WO2010022300 25.02.2010. 201008
(97) EP 2330899 15.06.2011. 201124 En
**(54) METHODS FOR TREATING NEUROPATHIC PAIN**
(71) Richter Gedeon Nyrt., Gyömröi út 19-21., 1103 Budapest, HU
(72) GAGE, Allyson, 6040 Blvd. East, Apt 24h, West New York, NJ 07093, US
(74) HOFFMANN EITLE, Patent- und Rechtsanwälte, Arabellastraße 4, 81925 München, DE

**(51) (8)** **EP 2334182 ***
***A 01N 43/46***
(30) US 27.08.2008. 199250
(86) PCT/US2009055208 27.08.2009.
(96) EP 09810587.7 27.08.2009. En
(87) WO2010025259 04.03.2010. 201009
(97) EP 2334182 22.06.2011. 201125 En
**(54) METHOD OF TREATING ORGANOPHOSPHOROUS POISONING**
(71) University of Maryland, Baltimore, 520 West Lombard Street, Baltimore MD 21201-1627, US;
The Government of the United States as Represented, by the Secretary of the Army, US Army Medical Research and Material Command, 504 Scott Street, Fort Detrick, Maryland 21705-5012, US
(72) ALBUQUERQUE, Edson X., 6005 LakeviewRoad, Baltimore, Maryland 21210, US;
ADLER, Michael, 1216 Sparrow Mill Way, Bel Air, Maryland 21015, US;
PEREIRA, Edna F.R., 6005 Lakeview Road, Baltimore, Maryland 21201, US
(74) Schweitzer, Klaus, et al, Plate Schweitzer Zounek, Patentanwälte, Rheingaustrasse 196, 65203 Wiesbaden, DE

**(51) (8)** **EP 2328414 ***
***A 01N 43/64***
***A 61K 31/41***
(30) US 29.08.2008. 93293 P
(86) PCT/US2009055427 28.08.2009.
(96) EP 09810685.9 28.08.2009. En
(87) WO2010025407 04.03.2010. 201009
(97) EP 2328414 08.06.2011. 201123 En
**(54) SUBSTITUTED TRIAZOLO-PYRIDAZINE DERIVATIVES**
(71) Concert Pharmaceuticals Inc., 99 Hayden Avenue, Suite 500, Lexington, MA 02421, US
(72) HARBESON, Scott, c/o Concert Pharmaceuticals Inc., 99 Hayden Ave Suite 500, Lexington, MA 02421, US
(74) Reitstötter - Kinzebach, Patentanwälte, Sternwartstrasse 4, 81679 München, DE

**(51) (8)** **EP 2334185 ***
***A 01N 43/78***
***A 61K 31/425***
(30) US 19.08.2008. 90094 P
US 12.11.2008. 113680 P
(86) PCT/US2009054292 19.08.2009.
(96) EP 09808760.4 19.08.2009. En
(87) WO2010022140 25.02.2010. 201008
(97) EP 2334185 22.06.2011. 201125 En
**(54) COMPOSITIONS AND METHODS OF USING (R)-PRAMIPEXOLE**
(71) Knopp Neurosciences, Inc., 2100 Wharton Street, Suite 615, Pittsburgh, PA 15203, US
(72) BOZIK, Michael, 108 Heidcrest Drive, Pittsburgh, PA 15237, US;
GRIBKOFF, Valentin, 142 Williams Road, Wallingford, CT 06482, US
(74) Ouzman, Beverley Nicola Claire, Murgitroyd & Company, Scotland House, 165-169 Scotland Street, Glasgow G5 8PL, GB

**(51) (8)** **EP 2285221 ***
***A 01N 43/80***
***A 01N 37/34***
***A 01N 37/40***
***A 01N 43/58***
***A 01N 43/64***
***A 01N 43/68***
***A 01N 43/70***
***A 01N 43/707***
***A 01N 43/88***
***A 01N 47/22***
***A 01N 47/30***
***A 01N 47/36***
***A 01N 61/00***
(30) US 18.03.2008. 37467
(86) PCT/EP2009052717 09.03.2009.
(96) EP 09721978.6 09.03.2009. En
(87) WO2009115420 24.09.2009. 200939
(97) EP 2285221 23.02.2011. 201108 En
**(54) HERBICIDAL COMPOSITIONS COMPRISING PYROXASULFONE VI**
(71) BASF SE, 67056 Ludwigshafen, DE
(72) SIEVERNICH, Bernd, Bertolt-Brecht-Str. 18a, 67454 Hassloch, DE;
SIMON, Anja, Multring 65, 69469 Weinheim, DE;
MOBERG, William Karl, Meckenheimer Str. 34, 67454 Hassloch, DE;
EVANS, Richard R., 8412 Lakewood Drive, Raleigh, North Carolina 27613, US
(74) Reitstötter - Kinzebach, Patentanwälte, Ludwigsplatz 4, 67059 Ludwigshafen, DE

**(51) (8)** **EP 2271219 ***
***A 01N 43/90***
***A 01P 3/00***
(30) EP 15.10.2008. 08166621
(86) PCT/EP2009007149 06.10.2009.
(96) EP 09778847.5 06.10.2009. De
(87) WO2010043319 22.04.2010. 201016
(97) EP 2271219 12.01.2011. 201102 De
**(54) USE OF DITHIIN TETRACARBOXIMIDES FOR TREATING PHYTOPATHOGENIC FUNGI**
(71) Bayer CropScience AG, Alfred-Nobel-Straße 50, 40789 Monheim, DE
(72) SEITZ, Thomas, Rietherbach 10b, 40764 Langenfeld, DE;
WACHENDORFF-NEUMANN, Ulrike, Oberer Markenweg 85, 56566 Neuwied, DE;
BENTING, Jürgen, Amselstrasse 7, 42799 Leichlingen, DE;
DAHMEN, Peter, Altebrücker Strasse 61, 41470 Neuss, DE;
VOERSTE, Arnd, Mozartstrasse 3-5, 50674 Köln, DE;
DUNKEL, Ralf, Am Kraehwinklerbach 9, 42799 Leichlingen, DE;
HILLEBRAND, Stefan, Lothringer Strasse 22, 41462 Neuss, DE;
TIETJEN, Klaus-Günther, Am Alten Broich 98, 40764 Langenfeld, DE;
BRUNET, Stéphane, 44 rue des Dombes, 01390 Saint André de Corcy, FR

**(51) (8)** **EP 2328417 ***
***A 01N 47/28***
(30) US 03.10.2008. 244968
(86) PCT/US2009048855 26.06.2009.
(96) EP 09818145.6 26.06.2009. En
(87) WO2010039308 08.04.2010. 201014
(97) EP 2328417 08.06.2011. 201123 En
**(54) COMPOUNDS, COMPOSITIONS AND METHODS FOR THE TREATMENT OF beta-AMYLOID DISEASES AND SYNUCLEINOPATHIES**
(71) Proteotech Inc., 12040, 115th Avenue N.E., Kirkland, WA 98034-6931, US
(72) ESPOSITO, Luke, A., 845 Bellevue PI E. Apt 105, Seattle, WA 98102, US;
HUDSON, F., Michael, 221 13th Ave. E. Apt. 404, Seattle, WA 98102, US;
LAKE, Thomas, 7732 Interurban Boulevard, Snohomish, WA 98296, US;
CUMMINGS, Joel, 9726 - 49th Ave NE, Seattle, WA 98115, US;
WEIGELE, Manfred, 6 Canal Park 601, Cambridge, MA 02141, US;
SNOW, Alan, D., 3812 167th PI. SW, Lynnwood, WA 98037, US;
LARSEN, Lesley, 24 Fairview Terrace, Sawyers Bay, Dunedin 9001, NZ
(74) Lee, Nicholas John, et al, Kilburn & Strode LLP, 20 Red Lion Street, London WC1R 4PJ, GB

**(51) (8)** **EP 2334186 ***
***A 01N 49/00***
***A 01N 55/00***
***A 01P 7/00***
(30) IT 22.09.2008. MI20081675
(86) PCT/EP2009006800 21.09.2009.
(96) EP 09741212.6 21.09.2009. En
(87) WO2010031584 25.03.2010. 201012
(97) EP 2334186 22.06.2011. 201125 En
**(54) USE OF VITAMIN E OR DERIVATIVES THEREOF FOR THE CONTROL OF ARTHROPODS**
(71) BIO.LO.GA. S.r.l., Via Maestri del Lavoro, 1, 31015 Conegliano (TV), IT
(72) PANIN, Giorgio, Via Vittorio Veneto 48/B, I-45100 Rovigo, IT
(74) Ferreccio, Rinaldo, Botti & Ferrari S.r.l., Via Cappellini, 11, 20124 Milano, IT

**(51) (8)** **EP 2341778 ***
***A 01N 57/20***
***A 01N 25/30***
***A 01N 59/02***
***A 01P 13/00***
(86) PCT/PL2008000079 06.11.2008.
(96) EP 08876246.3 06.11.2008. En
(87) WO2010053385 14.05.2010. 201019
(97) EP 2341778 13.07.2011. 201128 En
**(54) A LIQUID, HOMOGENOUS HERBICIDE COMPOSITION, A METHOD OF WEED CONTROL, A METHOD OF PRODUCTION OF LIQUID, HOMOGENOUS HERBICIDE COMPOSITION AND USE OF A LIQUID, HOMOGENOUS HERBICIDE COMPOSITION FOR WEED CONTROL**
(71) Sn Biotech Technologies Sp. Z O.o. Sp. K., Nickel Technology Park, Ul. Krzemowa 1, Zlotniki, 62-002 Suchy Las, PL;
Woznica, Zenon, Ul. Galczynskiego 62, 61-194 Poznan, PL

(72) WOZNICA, Zenon, Ul. Galczynskiego 62, 61-194 Poznan, PL
(74) Twardowska, Aleksandra, Jan Wierzchon & Partners, Patent and Trademark Attorneys, Ul. Zurawia 47/49, 00-680 Warszawa, PL

**(51) (8)** **EP 2323485** *
***A 01N 59/00***
***A 01N 59/06***
***A 01N 59/08***
***A 01N 59/16***
***A 61K 33/00***
(30) EP 08.08.2008. 08162069
(86) PCT/EP2009060260 07.08.2009.
(96) EP 09781601.1 07.08.2009. En
(87) WO2010015697 11.02.2010. 201006
(97) EP 2323485 25.05.2011. 201121 En
**(54) ANTI-ALLERGEN COMBINATIONS OF CALCIUM AND LANTHANUM SALTS**
(71) Janssen Pharmaceutica, N.V., Turnhoutseweg 30, 2340 Beerse, BE
(72) BYLEMANS, Dany, Leopold, Jozefien, Janssen Pharmaceutica NV, Turnhoutseweg 30, B-2340 Beerse, BE
(74) Verberckmoes, Filip Gerard, Janssen Pharmaceutica N.V., J&J Patent Law Department, Turnhoutseweg 30, 2340 Beerse, BE

**(51) (8)** **EP 2323487** *
***A 01P 3/00***
***A 01N 59/02***
***A 01N 43/40***
***A 01N 43/42***
***A 01N 43/56***
***A 01N 43/78***
***A 01N 43/90***
***A 01N 43/653***
***A 01N 47/44***
***A 01N 47/24***
***A 01N 47/14***
***A 01N 37/06***
(30) JP 03.07.2008. 2008174963
JP 14.11.2008. 2008292511
(86) PCT/JP2009062259 30.06.2009.
(96) EP 09773604.5 30.06.2009. En
(87) WO2010002026 07.01.2010. 201001
(97) EP 2323487 25.05.2011. 201121 En
**(54) FUNGICIDAL COMPOSITION AND METHOD FOR CONTROLLING PLANT DISEASES**
(71) ISHIHARA SANGYO KAISHA, LTD., 3-15, Edobori 1-chome, Nishi-ku, Osaka-shi, Osaka 550-0002, JP
(72) OGAWA, Munekazu, c/o Ishihara Sangyo Kaisha Ltd., Chuo Kenkyusho, 3-1 Nishi-shibukawa 2-chome, Kusatsu-shi, Shiga 525-0025, JP;
NISHIMURA, Akihiro, c/o Ishihara Sangyo Kaisha Ltd., Chuo Kenkyusho, 3-1 Nishi-shibukawa 2-chome, Kusatsu-shi, Shiga 525-0025, JP
(74) Blodig, Wolfgang, Wächtershäuser & Hartz, Patentanwälte, Weinstraße 8, D-80333 München, DE

**(51) (8)** **EP 2324711**
***A 21C 9/02***
***A 21C 15/00***
(96) EP 09014428.8 18.11.2009. De
(97) EP 2324711 25.05.2011. 201121 De
**(54) Method for producing a longitudinal rod-shaped baked good**
(71) Griesson - de Beukelaer, GmbH & Co. KG, August-Horch-Strasse 23, 56751 Polch, DE
(72) Zydek, Wolfgang, Karolinger Str. 45, 56626 Andernach, DE;
Bode, Günther, Schulstr. 2, 56341 Filsen, DE;
Koch, Ingo, Freiheitsstr. 4, 98617 Meiningen, DE
(74) DR. STARK & PARTNER, PATENTANWÄLTE, Moerser Straße 140, 47803 Krefeld, DE

**(51) (8)** **EP 2248429**
***A 22C 21/00***
***A 22C 21/06***
(30) NL 05.05.2009. 2002840
(96) EP 10156205.6 11.03.2010. En
(97) EP 2248429 10.11.2010. 201045 En
**(54) Apparatus and method for conveying organ packages to a processing station**
(71) Meijn Food Processing Technology B.V., Noordeinde 68, 1511 AE Oostzaan, NL
(72) Spijker, Remco, c/o Noordeinde 68, NL-1511 AE, OOSTZAAN, NL;
Jansen, Tom Cornelis, c/o Noordeinde 68, NL-1511 AE, Oostzaan, NL;
van Steijn, Aloysius Christianus Maria, c/o Nooreinde 68, NL-1511 AE, OOSTZAAN, NL
(74) Van Breda, Jacobus, Octrooibureau Los & Stigter B.V., Weteringschans 96, 1017 XS Amsterdam, NL

**(51) (8)** **EP 2330914** *
***A 23B 7/153***
***A 23B 7/16***
***A 23L 1/00***
***A 23L 1/212***
***A 23L 3/34***
***A 23L 3/3454***
***A 23N 15/00***
***A 23P 1/08***
(30) FR 22.09.2008. 0856351
WO 14.11.2008. PCT/FR2008/052053
(86) PCT/FR2009050153 02.02.2009.
(96) EP 09814146.8 02.02.2009. Fr
(87) WO2010031929 25.03.2010. 201012
(97) EP 2330914 15.06.2011. 201124 Fr
**(54) METHOD FOR COATING FOOD PRODUCTS**
(71) XEDA INTERNATIONAL, Route Nationale 7, Zone Artisanale la Crau, 13670 Saint-Andiol, FR
(72) SARDO, Alberto, 17 montée des Tours, F-13160 Chateaurenard, FR
(74) Domenego, Bertrand, Cabinet Lavoix, 2, place d'Estienne d'Orves, 75441 Paris Cedex 09, FR

**(51) (8)** **EP 2339922 ***
***A 23B 7/153***
***A 23B 7/16***
***A 23L 1/00***
***A 23L 1/212***
***A 23L 3/34***
***A 23L 3/3454***
***A 23N 15/00***
***A 23P 1/08***
***A 23N 15/06***
***B 05D 1/30***
(30) FR 22.09.2008. 0856351
WO 02.02.2009. PCT/FR2009/050153
WO 02.02.2009. PCT/FR2009/050152
(86) PCT/FR2009051783 22.09.2009.
(96) EP 09748421.6 22.09.2009. Fr
(87) WO2010031983 25.03.2010. 201012
(97) EP 2339922 06.07.2011. 201127 Fr
**(54) DEVICE FOR COATING FOOD PRODUCTS, PARTICULARLY FRUITS AND VEGETABLES**
(71) Xeda International, Zone Artisanale la Crau Route Nationale 7, 13670 Saint Andiol, FR
(72) SARDO, Alberto, 17 montée des Tours, F-13160 Chateaurenard, FR;
SARDO, Stefano, 17 montée des Tours, F-13160 Chateaurenard, FR
(74) Domenego, Bertrand, Cabinet Lavoix, 2, place d'Estienne d'Orves, 75441 Paris Cedex 09, FR

**(51) (8)** **EP 2330915 ***
***A 23C 9/00***
***A 23C 9/14***
(30) FI 29.08.2008. 20085806
US 29.08.2008. 201620
(86) PCT/FI2009050678 28.08.2009.
(96) EP 09784164.7 28.08.2009. En
(87) WO2010023361 04.03.2010. 201009
(97) EP 2330915 15.06.2011. 201124 En
**(54) LOW-LACTOSE AND LACTOSE-FREE MILK PRODUCT AND PROCESS FOR PRODUCTION THEREOF**
(71) Valio Ltd., Meijeritie 6, 00370 Helsinki, FI
(72) KALLIOINEN, Harri, Nummistentie 747, FI-04480 Haarajoki, FI;
TIKANMÄKI, Reetta, Museokatu 20 - 22 B43, FI-00100 Helsinki, FI
(74) Pitkänen, Kirsi-Marja, Kolster Oy Ab, Iso Roobertinkatu 23, P.O. Box 148, 00121 Helsinki, FI

**(51) (8)** **EP 2334190 ***
***A 23C 9/00***
***A 23C 9/14***
***A 23C 9/146***
***A 23C 9/142***
(30) FI 29.08.2008. 20085809
US 29.08.2008. 201301
(86) PCT/FI2009050679 28.08.2009.
(96) EP 09784165.4 28.08.2009. En
(87) WO2010023362 04.03.2010. 201009
(97) EP 2334190 22.06.2011. 201125 En
**(54) LOW-LACTOSE AND LACTOSE-FREE MILK PRODUCT AND PROCESS FOR PRODUCTION THEREOF**
(71) Valio Ltd., Meijeritie 6, 00370 Helsinki, FI
(72) TIKANMÄKI, Reetta, Museokatu 20-22 B43, 00100 Helsinki, FI;
KALLIOINEN, Harri, Nummistentie 747, FI-04480 Haarajoki, FI
(74) Pitkänen, Kirsi-Marja, Kolster Oy Ab, Iso Roobertinkatu 23, P.O. Box 148, 00121 Helsinki, FI

**(51) (8)** **EP 2323499 ***
***A 23J 3/14***
***A 23J 1/14***
***A 23K 1/14***
***A 23L 1/305***
***C 07K 1/14***
***C 07K 14/415***
(30) US 18.08.2008. 136193 P
(86) PCT/CA2009001147 18.08.2009.
(96) EP 09807781.1 18.08.2009. En
(87) WO2010020038 25.02.2010. 201008
(97) EP 2323499 25.05.2011. 201121 En
**(54) PRODUCTION OF CANOLA PROTEIN ISOLATE WITHOUT HEAT TREATMENT**
(71) Burcon Nutrascience (MB) Corp., 1388 Waller Avenue, Winnipeg, Manitoba R3T 1P9, CA
(72) SEGALL, Kevin I., 31 Dunbar Crescent, Winnipeg, Manitoba R3P 0W6, CA;
GREEN, Brent E., 24 Poplarwood Drive, Winnipeg, Manitoba R0C 3E0, CA;
SCHWEIZER, Martin, 117 Haig Avenue, Winnipeg, Manitoba R2M 0E3, CA
(74) Selden, Deborah Anne, Beck Greener, Fulwood House, 12 Fulwood Place, London WC1V 6HR, GB

**(51) (8)** **EP 2337459 ***
***A 23L 1/212***
(86) PCT/IT2008000563 29.08.2008.
(96) EP 08876033.5 29.08.2008. En
(87) WO2010023701 04.03.2010. 201009
(97) EP 2337459 29.06.2011. 201126 En
**(54) PROCESS FOR PRODUCING VEGETABLE OR FRUIT PULP OR PUREE PACKAGING**
(71) Altreconserve Srl, Via Bocche di Sotto 8, 31010 Orsago, (TV), IT
(72) DE ROCCO Mr. Alberto, Via 1r Maggio 27/A, 31018 Gaiarine Treviso, IT;
CALZAVARA Mr. Michele, Via Monteponente 6, 39042 Bressanone Bolzano, IT
(74) Giugni, Diego, Propria S.r.l., Via della Colonna, 35, IT-33170 Pordenone, IT

**(51) (8)** **EP 2334203 ***
***A 23L 1/236***
(30) US 26.08.2008. 91987 P
(86) PCT/US2009054967 25.08.2009.
(96) EP 09791913.8 25.08.2009. En
(87) WO2010025158 04.03.2010. 201009
(97) EP 2334203 22.06.2011. 201125 En
**(54) SWEETENER COMPOSITIONS COMPRISING REBAUDIOSIDE A, ERYTHRITOL, A DISACCHARIDE CARBOHYDRATE OR FRUCTOSE AND A TASTE-IMPROVING AMOUNT OF CELLULOSE, AND METHODS FOR THEIR MANUFACTURE**

(71) Merisant Company, 33 North Dearborn, Suite 200, Chicago, IL 60602, US
(72) DOYLE, John, 151 North Kenilworth, 4B, Oak Park, IL 60301, US;
MACHADO, Sergio, 107 Linden Drive, Oswego, IL 60543, US
(74) Cabinet Plasseraud, 52, rue de la Victoire, 75440 Paris Cedex 09, FR

**(51) (8)** **EP 2337460** *
***A 23L 1/24***
***A 23D 7/00***
***A 23D 7/04***
***A 23J 1/14***
***A 23L 1/035***
***B 01F 17/30***
(30) US 17.09.2008. 136585 P
(86) PCT/CA2009001286 16.09.2009.
(96) EP 09813927.2 16.09.2009. En
(87) WO2010031165 25.03.2010. 201012
(97) EP 2337460 29.06.2011. 201126 En
**(54) EMULSIFIED FOODS**
(71) Burcon Nutrascience (MB) Corp., 1388 Waller Avenue, Winnipeg, Manitoba R3T 1P9, CA
(72) SEGALL, Kevin I., 31 Dunbar Crescent, Winnipeg, Manitoba R3P 0W6, CA;
MEDINA, Sarah, 315 Wildwood Park, Winnipeg, Manitoba R3T 0E5, CA;
GOSNELL, Brandy, 118 Arden Avenue, Winnipeg, Manitoba R2M 2K2, CA;
SCHWEIZER, Martin, 117 Haig Avenue, Winnipeg, Manitoba R2M 0E3, CA
(74) Selden, Deborah Anne, Beck Greener, Fulwood House, 12 Fulwood Place, London WC1V 6HR, GB

**(51) (8)** **EP 2330924** *
***A 23L 1/29***
***A 23L 1/30***
***A 23L 1/304***
***A 23L 1/302***
***A 23L 1/303***
(30) US 09.11.2007. 983545
(86) PCT/US2008085519 04.12.2008.
(96) EP 08847480.4 04.12.2008. En
(87) WO2009062203 14.05.2009. 200920
(97) EP 2330924 15.06.2011. 201124 En
**(54) IRON-CONTAINING NUTRITIONAL SUPPLEMENT**
(71) Biolink Life Sciences, Inc., 250 Quade Drive, Cary, NC 27513, US
(72) NELSON, Deanna, J., 1505 Princess Anne Road, Raleigh, NC 27607, US
(74) Glawe, Delfs, Moll, Patent- und Rechtsanwälte, Rothenbaumchaussee 58, 20148 Hamburg, DE

**(51) (8)** **EP 2328427** *
***A 23L 1/31***
***A 23L 1/314***
***A 23L 1/315***
***A 23L 1/317***
(30) EP 05.09.2008. 08163774
(86) PCT/EP2009061493 04.09.2009.
(96) EP 09782639.0 04.09.2009. En
(87) WO2010026231 11.03.2010. 201010
(97) EP 2328427 08.06.2011. 201123 En
**(54) OIL COMPOSITION FOR THE PREPARATION OF OIL CONTAINING FOOD PRODUCTS**
(71) Creta Farm Societe Anonyme, Industrial And Commercial, Trading as CRETA FARM S.A., 15th km National Road Rethymnon-Heraklion, Latzimas of Arkadi, 74100 Rethymnon, GR
(72) DOMAZAKIS, Emmanouil, 5 Moatsou Street, GR-74100 Rethymnon, GR
(74) Hess, Peter K. G., Bardehle Pagenberg, Galileiplatz 1, 81679 München, DE

**(51) (8)** **EP 2298099**
***A 43B 7/06***
***A 43B 7/12***
(96) EP 09425334.1 28.08.2009. En
(97) EP 2298099 23.03.2011. 201112 En
**(54) Insert for vapor-permeable and waterproof soles**
(71) Geox S.p.A., Via Feltrina Centro, 16, 31044 Montebelluna Località Biadene (Treviso), IT
(72) Polegato Moretti, Mario, Via Fantin, 96, 31035 Crocetta del Montello (Treviso), IT
(74) Alagem Modiano, Lara S., et al, Modiano & Partners, Via Meravigli, 16, 20123 Milan, IT

**(51) (8)** **EP 2298100**
***A 43B 7/06***
***A 43B 7/12***
(96) EP 09425335.8 28.08.2009. En
(97) EP 2298100 23.03.2011. 201112 En
**(54) Vapor-permeable shoe**
(71) Geox S.p.A., Via Feltrina Centro, 16, 31044 Montebelluna Località Biadene (Treviso), IT
(72) Polegato Moretti, Mario, Via Fantin, 96, 31035 Crocetta del Montello, (Prov. of Treviso), IT
(74) Alagem Modiano, Lara S., et al, Modiano & Partners, Via Meravigli, 16, 20123 Milan, IT

**(51) (8)** **EP 2298101**
***A 43B 7/12***
***A 43B 7/06***
(96) EP 09425336.6 28.08.2009. En
(97) EP 2298101 23.03.2011. 201112 En
**(54) Insert for vapor-permeable and waterproof soles**
(71) Geox S.p.A., Via Feltrina Centro, 16, 31044 Montebelluna Località Biadene (Treviso), IT
(72) Polegato Moretti, Mario, Via Fantin, 96, 31035 Crocetta del Montello, (Prov. of Treviso), IT
(74) Alagem Modiano, Lara S., et al, Modiano & Partners, Via Meravigli, 16, 20123 Milan, IT

**(51) (8)** **EP 2063730** *
***A 43B 7/22***
***A 43B 17/02***
(30) US 21.09.2006. 524979
US 21.09.2006. 524745
(86) PCT/US2007020475 21.09.2007.
(96) EP 07838635.6 21.09.2007. En
(87) WO2008036397 27.03.2008. 200813
(97) EP 2063730 03.06.2009. 200923 En
**(54) CUSHIONED ORTHOTIC**

(71) MSD Consumer Care, Inc., 3030 Jackson Avenue, Memphis TN 38151, US
(72) HOWLETT, Harold, A., 4730 Apple Creek Drive, Horn Lake, Mississippi 38637, US;
XIA, Bin, 2100 Oaklawn Lane, Germantown, Tennessee 38139, US;
YANG, Philip, C., 258 N. White Station Road, Memphis, Tennessee 38117, US
(74) HOFFMANN EITLE, Patent- und Rechtsanwälte, Arabellastraße 4, 81925 München, DE

**(51) (8)** **EP 2327324**
***A 45B 25/16***
***A 45B 25/14***
(30) CN 22.06.2009. 200910148298
(86) PCT/CN2009072640 06.07.2009.
(96) EP 09846376.3 06.07.2009. Zh
(87) WO2010148576 29.12.2010. 201052
(97) EP 2327324 01.06.2011. 201122 En
**(54) AUTOMATIC OPEN-CLOSE UMBRELLA**
(71) Sun City Xiamen Rainwear Co., Ltd., Golden Ind. Estate, Tongan District, Xiamen, Fujian 361009, CN
(72) CAI, Rongtuan, Golden Ind. Estate, Tongan District, Xiamen, Fujian 361009, CN
(74) Chaillot, Genevive, Cabinet Chaillot, 16-20 Avenue de l'Agent Sarre, B.P. 74, 92703 Colombes Cedex, FR

**(51) (8)** **EP 2341794 ***
***A 45D 1/04***
***A 45D 2/38***
***A 45D 1/12***
(30) IT 17.09.2008. BO20080568
(86) PCT/EP2009055919 15.05.2009.
(96) EP 09814098.1 15.05.2009. En
(87) WO2010031603 25.03.2010. 201012
(97) EP 2341794 13.07.2011. 201128 En
**(54) A HAIR CURLING DEVICE**
(71) Catini, Mauro, C. da Bracalente 186, Casette d'Ete, 63019 S. Elpidio a Mare (Ascoli Piceno), IT
(72) Catini, Mauro, C. da Bracalente 186, Casette d'Ete, 63019 S. Elpidio, Mare (Ascoli Piceno), IT
(74) Dall'Olio, Giancarlo, Invention S.r.l., Via delle Armi 1, 40137 Bologna, IT

**(51) (8)** **EP 2326208 ***
***A 46B 15/00***
***A 61C 19/04***
(30) FI 23.05.2008. 20085488
(86) PCT/FI2009050205 17.03.2009.
(96) EP 09749973.5 17.03.2009. En
(87) WO2009141489 26.11.2009. 200948
(97) EP 2326208 01.06.2011. 201122 En
**(54) INTELLIGENT TOOTHBRUSH MONITORING DEVICE**
(71) Brushgate Oy, Erottajankatu 5A, 00130 Helsinki, FI
(72) PUURUNEN, Juha-Pekka, Onkilahdentie 120, FI-73100 Lapinlahti, FI;
VISA, Ari, Hakamäki 2 E 70, FI-02120 Espoo, FI;
COLLIN, Jussi, Rantakoivistonkatu 10, FI-37830 Viiala, FI;
KANTOLA, Jouni, Euraniityntie 11, FI-27510 Eura, FI;
AVDOUEVSKI, Ivan, Joupinmäensyrjä 3, 1, FI-02760 Espoo, FI;
MERIHEINÄ, Ulf, Stor-Rösvägen 15, Fl-01150 Söderkulla, FI;
VILJANEN, Teijo, Kromitie 7, Fl-02750 Espoo, FI
(74) Holmström, Stefan Mikael, Kolster Oy Ab, Iso Roobertinkatu 23, P.O. Box 148, 00121 Helsinki, FI

**(51) (8)** **EP 2248450**
***A 47J 19/06***
***B 26D 3/26***
***B 30B 1/12***
(96) EP 09159473.9 05.05.2009. En
(97) EP 2248450 10.11.2010. 201045 En
**(54) Device for handling food**
(71) Roes, Gunter, Steenweg op Sevendonk 95, 2360 Oud-Turnhout, BE
(72) Roes, Gunter, Steenweg op Sevendonk 95, 2360 Oud-Turnhout, BE
(74) BiiP cvba, Culliganlaan 1B, 1831 Diegem (Bruxelles), BE

**(51) (8)** **EP 2326222 ***
***A 47J 31/30***
(86) PCT/EP2008062511 19.09.2008.
(96) EP 08804445.8 19.09.2008. En
(87) WO2010031440 25.03.2010. 201012
(97) EP 2326222 01.06.2011. 201122 En
**(54) CAN FOR THE EXTEMPORANEOUS PREPARATION OF BEVERAGES BY EXTRACTION AND/OR INFUSION, PROVIDED WITH A SAFETY LID**
(71) Brizio, Adriana, Via Sole, 18, 6977 Ruvigliana, CH
(72) Brizio, Adriana, Via Sole, 18, 6977 Ruvigliana, CH
(74) Ripamonti, Enrico, Giambrocono & C. S.p.A., Via Rosolino Pilo, 19/B, 20129 Milano, IT

**(51) (8)** **EP 2326223 ***
***A 47J 31/36***
***A 47J 31/06***
***B 65D 85/804***
(86) PCT/NL2008050541 08.08.2008.
(96) EP 08793833.8 08.08.2008. En
(87) WO2010016753 11.02.2010. 201006
(97) EP 2326223 01.06.2011. 201122 En
**(54) SYSTEM, METHOD AND CAPSULE FOR PREPARING A BEVERAGE**
(71) Sara Lee/DE N.V., Keulsekade 143, 3532 AA Utrecht, NL
(72) BIESHEUVEL, Arend Cornelis Jacobus, Raadhuislaan 7, NL-4251 VS Werkendam, NL;
KAMERBEEK, Ralf, Borneostraat 2a, NL-3531 PJ Utrecht, NL;
WONG, Kon Euan Gerard, 6/2 Argyle Court, Glen Waverley, Victoria 3150, AU;
BRANDT, Guido, 43 Norville Street, Bentleigh East, Victoria 3163, AU;
KOELING, Hendrik Cornelis, Harderwijkkade 11, NL-3826 BE Amersfoort, NL
(74) Jansen, Cornelis Marinus, et al, VEREENIGDE, Johan de Wittlaan 7, 2517 JR Den Haag, NL

**(51) (8)** **EP 2250951**
***A 47J 37/06***
(96) EP 09159686.6 07.05.2009. En
(97) EP 2250951 17.11.2010. 201046 En
**(54) Toasting apparatus with a handle having predetermined locking positions**

(71) Eksen Makine Sanayi ve Ticaret A.S., Gebze Organize Sanayi Bölgesi No. 602, Gebze, 41480 Kocaeli, TR
(72) TAHINCIOGLU, Besim, EKSEN Makine Sanayi ve Ticaret A.S., Gebze Organize Sanayi Bölgesi No: 602 Gebze, 41480, Kocaeli, TR
(74) Sevinç, Erkan, Istanbul Patent & Trademark Consultancy Ltd., Plaza-33, Büyükdere cad. No: 33/16, Sisli, 34381 Istanbul, TR

**(51) (8)** **EP 2305085**
***A 47K 3/34***
***E 05D 15/06***
(30) IT 25.09.2009. FI20090205
(96) EP 10177837.1 21.09.2010. It
(97) EP 2305085 06.04.2011. 201114 En
**(54) Shower cabin with sliding door**
(71) Antonio Lupi Desing S.P.A, ., Via Mazzini 73/75, Loc. Stabbia, 50050 Cerreto Guidi (Firenze), IT
(72) Tellatin, Nevio, Via Vicenza, 1/13, 35015 Galliera Veneta (Padova), IT
(74) Bardini, Marco Luigi, Società Italiana Brevetti SpA, Corso dei Tintori, 25, 50122 Firenze, IT

**(51) (8)** **EP 2341815 ***
***A 61B 1/005***
***A 61B 1/313***
***A 61B 17/34***
(30) US 14.07.2008. 172782
US 14.07.2008. 172752
(86) PCT/US2009050451 14.07.2009.
(96) EP 09790361.1 14.07.2009. En
(87) WO2010009070 21.01.2010. 201003
(97) EP 2341815 13.07.2011. 201128 En
**(54) ENDOSCOPIC TRANSLUMENAL ARTICULATABLE AND STEERABLE FLEXIBLE OVERTUBE**
(71) Ethicon Endo-Surgery, Inc., 4545 Creek Road, Cincinnati, OH 45242, US
(72) BAKOS, Gregory J., 6330 Redwood Court, Mason, OH 45040, US;
FOX, William D., 2606 Jett Hill Road, New Richmond, OH 45157, US;
SPIVEY, James T., 542 Missouri Avenue, Cincinnati, OH 45226, US;
MCDERMOTT, Bernard C., Gorthfada, Kiltimagh, County Mayo, IE;
KELLY, Micheal E., Rockforest, Tubber, County Clare, IE;
GUINAN, Michelle M., 31 Coillte Mhuirlinne, Merlin Park, Galway, IE
(74) Tunstall, Christopher Stephen, Carpmaels & Ransford, One Southampton Row, GB-London WC1B 5HA, GB

**(51) (8)** **EP 2337488 ***
***A 61B 1/018***
***A 61B 17/00***
(30) US 18.07.2008. 129788 P
(86) PCT/US2009050803 16.07.2009.
(96) EP 09790519.4 16.07.2009. En
(87) WO2010009292 21.01.2010. 201003
(97) EP 2337488 29.06.2011. 201126 En
**(54) ENDOSCOPE WITH GUIDE**
(71) Boston Scientific Scimed, Inc., One Scimed Place, Maple Grove, MN 55311-1566, US
(72) WEITZNER, Barry, 3 Macleod Lane, Acton, MA 01720, US
(74) Hauck Patent- und Rechtsanwälte, Neuer Wall 50, 20354 Hamburg, DE

**(51) (8)** **EP 2243419**
***A 61B 3/028***
(96) EP 09005757.1 24.04.2009. De
(97) EP 2243419 27.10.2010. 201043 De
**(54) Integral and differential visual objects for examination and optimization of vision**
(71) Stuetz, Ignaz Alois, Hofgasse 10, 4212 Neumarkt im Muehlkreis, AT
(72) Stuetz, Ignaz Alois, Hofgasse 10, 4212 Neumarkt im Muehlkreis, AT
(74) Piermayr, Alexander, Stelzhamerstraße 12, 4020 Linz, AT

**(51) (8)** **EP 2163196**
***A 61B 5/053***
(30) RU 31.12.2004. 2004138996
RU 01.07.2005. 2005120494
(96) EP 09014944.4 27.12.2005. En
(97) EP 2163196 17.03.2010. 201011 En
**(54) Device for measuring the presence of foreign substances in a living organism and for individually selecting preparations for increasing an organism's life activity**
(71) Gotovsky, Mikhail Yurievich, ul. B . Gruzinskaya 12-119, Moscow 123242, RU
(72) Gotovsky, Mikhail Yurievich, ul. B . Gruzinskaya 12-119, Moscow 123242, RU
(74) Gibler, Ferdinand, Gibler & Poth Patentanwälte OG, Dorotheergasse 7/14, 1010 Wien, AT

**(51) (8)** **EP 2341829 ***
***A 61B 5/157***
(30) US 03.10.2008. 102640 P
(86) PCT/US2009059429 02.10.2009.
(96) EP 09818590.3 02.10.2009. En
(87) WO2010040089 08.04.2010. 201014
(97) EP 2341829 13.07.2011. 201128 En
**(54) INTEGRATED LANCET AND ANALYTE TESTING APPARATUS**
(71) Abbott Diabetes Care Inc., 1360 South Loop Road, Alameda, CA 94502, US
(72) RUSH, Benjamin M., 5915 LaSalle Avenue, Oakland, California 94611, US;
FELDMAN, Benjamin J., 5830 Colby Street, Oakland, California 94618, US
(74) Williams, Sarah, Williams Powell, Staple Court, 11 Staple Inn Buildings, London WC1V 7QH, GB

**(51) (8)** **EP 2330986 ***
***A 61B 17/04***
(30) US 28.08.2008. 92557 P
US 21.08.2009. 545310
(86) PCT/US2009054736 24.08.2009.
(96) EP 09791831.2 24.08.2009. En
(87) WO2010025102 04.03.2010. 201009
(97) EP 2330986 15.06.2011. 201124 En
**(54) ENDOSCOPIC SUTURING DEVICE**
(71) Boston Scientific Scimed, Inc., One Scimed Place, Maple Grove, MN 55311-1566, US

(72) CLERC, Claude, 47 Omalley Road, Marlborough, MA 01752, US;
RIOUX, Robert, F., 5 Esther Lane, Ashland, MA 01721, US
(74) Hauck Patent- und Rechtsanwälte, Neuer Wall 50, 20354 Hamburg, DE

**(51) (8)** **EP 2337505 ***
***A 61B 17/06***
(30) US 23.07.2008. 177947
(86) PCT/US2009050540 14.07.2009.
(96) EP 09790395.9 14.07.2009. En
(87) WO2010011532 28.01.2010. 201004
(97) EP 2337505 29.06.2011. 201126 En
**(54) COLLAPSIBLE BARBED SUTURES HAVING REDUCED DRAG AND METHODS THEREFOR**
(71) Ethicon, Inc, U.S. Route 22, Somerville, NJ 08876, US
(72) ROUSSEAU, Robert, A., 736 Geigel Hill Road, Ottsville, PA 18942, US
(74) James, Anthony Christopher W.P., Carpmaels & Ransford, One Southampton Row, London, WC1B 5HA, GB

**(51) (8)** **EP 2341842 ***
***A 61B 17/064***
***A 61B 17/122***
***A 61B 17/128***
***A 61B 17/00***
(30) US 06.01.2009. 349302
US 10.10.2008. 104360 P
(86) PCT/US2009059770 07.10.2009.
(96) EP 09741515.2 07.10.2009. En
(87) WO2010042571 15.04.2010. 201015
(97) EP 2341842 13.07.2011. 201128 En
**(54) PLICATION DEVICE WITH FORMABLE LINEAR FASTENER FOR USE IN THE DIRECT PLICATION ANNULOPLASTY TREATMENT OF MITRAL VALVE REGURGITATION**
(71) Cordis Corporation, 14201 NW 60th Avenue, Miami Lakes, FL 33014, US
(72) KREVER, Matthew, 2 Arrighi Drive, Warren, NJ 07059, US;
CEDRO, Rudolph, Jr., 8 Old Jericho Road, Clinton, NJ 08809, US;
LASH, Timothy, 42 Wesley Road, Hillsborough, NJ 08844, US;
MAJERCAK, David, 519 Madison Drive, Stewartsville, NJ 08886, US;
OLSEN, Daniel, H., 215 Beacon Hill Road, Califon, NJ 07830, US
(74) James, Anthony Christopher W.P., Carpmaels & Ransford, One Southampton Row, London, WC1B 5HA, GB

**(51) (8)** **EP 2339982 ***
***A 61B 19/02***
(86) PCT/GB2008050972 21.10.2008.
(96) EP 08875678.8 21.10.2008. En
(87) WO2010046617 29.04.2010. 201017
(97) EP 2339982 06.07.2011. 201127 En
**(54) MEDICAL EQUIPMENT STORAGE AND TRANSPORTATION KIT**
(71) Medicart International Limited, Birchwood House, 55 Vanguard Way, Shoeburyness, Southend-on-Sea, Essex SS3 9QY, GB
(72) PARKER, George, Christopher, 40 Henley Crescent, Westcliff-on-Sea, Essex SS0 0NT, GB;
LUKE, Barry, 5 Heeswyk Road, Canvey Island, Essex SS8 8ET, GB
(74) Walder, Jeremy Thomas, et al, Sanderson & Co., 34, East Stockwell Street, Colchester, Essex CO1 1ST, GB

**(51) (7)** **EP 1541092**
A 61C 5/12
(30) NZ 08.12.2003. 53003403
(96) EP 04257624.9 08.12.2004. En
(97) EP 1541092 15.06.2005. 200524 En
**(54) A matrix band retainer**
(71) McDonald, Simon Paul, 18 Giles Way, Tanners Pt., Katikati, NZ
(72) McDonald, Simon Paul, 18 Giles Way, Tanners Pt., Katikati, NZ
(74) Skone James, Robert Edmund, Gill Jennings & Every LLP, The Broadgate Tower, 20 Primrose Street, London EC2A 2ES, GB

**(51) (8)** **EP 2241284**
***A 61F 2/01***
***A 61F 2/82***
***A 61F 2/00***
***A 61F 2/02***
***A 61F 2/84***
(96) EP 09157975.5 15.04.2009. En
(97) EP 2241284 20.10.2010. 201042 En
**(54) Intravasculature devices and balloons for use therewith**
(71) National University of Ireland, Galway, College Road, Galway, IE
(72) Murphy, Bruce, 12 Crestwood Coolough Road, Galway, IE;
Vard, John, 123 Booterstown Avenue Blackrock, Dublin, IE
(74) Lane, Cathal Michael, et al, 5 Dartmouth Road, Dublin 6, IE

**(51) (8)** **EP 2341867 ***
***A 61F 2/06***
(30) US 05.10.2009. 573527
US 06.10.2008. 103073 P
(86) PCT/US2009059604 06.10.2009.
(96) EP 09819725.4 06.10.2009. En
(87) WO2010042458 15.04.2010. 201015
(97) EP 2341867 13.07.2011. 201128 En
**(54) RECONSTRAINABLE STENT DELIVERY SYSTEM**
(71) Flexible Stenting Solutions, Inc., 23 Christopher Way, Suite 103, Eatontown, NJ 07724, US
(72) BEACH, Bradley, 822 13th Avenue, Belmar, NJ 07719, US;
BURPEE, Janet, 56 Buttonwood Drive, Fairhaven, New Jersey 07704, US;
FILACHEK, Andrew, 1009 Surf Avenue, Beachwood, New Jersey 08722, US
(74) Barnfather, Karl Jon, et al, Withers & Rogers LLP, Goldings House, 2 Hays Lane, London SE1 2HW, GB

**(51) (8)** **EP 2066266 ***
***A 61F 2/38***
(30) US 25.09.2006. 826844 P
(86) PCT/US2007079355 25.09.2007.

(96) EP 07814989.5 25.09.2007. En
(87) WO2008039735 03.04.2008. 200814
(97) EP 2066266 10.06.2009. 200924 En
**(54) POSTERIOR STABILIZED KNEE PROSTHESIS**
(71) New York Society for the Ruptured and Crippled, Maintaining the Hospital for Special Surgery, 535 East 70th Street, New York, NY 10021, US
(72) LIPMAN, Joseph, 165 W 91 St. 7G, New York NY 10024, US;
RABINOWICZ, Anna, 107 West 25th, Apt. 2E, New York NY 10001, US
(74) Olsen, Lars Pallisgaard, Zacco Denmark A/S, Hans Bekkevolds Allé 7, 2900 Hellerup, DK

**(51) (8)** **EP 2337530 ***
***A 61F 5/56***
(30) US 31.07.2008. 183955
(86) PCT/US2009052126 29.07.2009.
(96) EP 09790945.1 29.07.2009. En
(87) WO2010014726 04.02.2010. 201005
(97) EP 2337530 29.06.2011. 201126 En
**(54) MAGNETIC IMPLANTS FOR TREATING OBSTRUCTIVE SLEEP APNEA**
(71) Ethicon, Inc, U.S. Route 22, Somerville, NJ 08876, US
(72) ROUSSEAU, Robert, A., 736 Geigel Hill Road, Ottsville, PA 18942, US;
WEADOCK, Kevin, 16 Strawberry Lane, Hillsborough, NJ 08844, US
(74) James, Anthony Christopher W.P., Carpmaels & Ransford, One Southampton Row, London, WC1B 5HA, GB

**(51) (8)** **EP 2328527 ***
***A 61F 9/00***
***A 61F 9/007***
(30) US 08.07.2008. 134271
(86) PCT/US2009049942 08.07.2009.
(96) EP 09790157.3 08.07.2009. En
(87) WO2010006053 14.01.2010. 201002
(97) EP 2328527 08.06.2011. 201123 En
**(54) LACRIMAL IMPLANT BODY INCLUDING COMFORTING AGENT**
(71) QLT Plug Delivery, Inc., 1098 Hamilton Court, Menlo Park, CA 94025, US
(72) JAIN, Rachna, 294 Jurgens Drive, Milpitas, CA 95035, US;
SHIMIZU, Robert, W., 26 DanForth Avenue, Laguna Niguel, CA 92677, US;
RAPACKI, Alan, R., 2725 Hastings Avenue, Redwood City, CA 94061, US;
SIM, Sylvie, 13250 Franklin Avenue, Mountain View, CA 94025, US
(74) Vossius & Partner, Siebertstrasse 4, 81675 München, DE

**(51) (8)** **EP 2340002 ***
***A 61F 13/02***
(30) US 06.10.2008. 103067 P
(86) PCT/US2009059726 06.10.2009.
(96) EP 09819771.8 06.10.2009. En
(87) WO2010042540 15.04.2010. 201015
(97) EP 2340002 06.07.2011. 201127 En
**(54) FOAM MEDICAL DEVICES AND METHODS**
(71) Providence Health System - Oregon, 1235 Northeast 47th Avenue, Portland, OR 97213, US;
Providence And Biomedical Research Services, Inc., 9755 SW Barnes Road, Suite 505, Portland, OR 97225, US
(72) GUO, Jian, Xin, 11072 NW Ironwood Lane, Portland, OR 97229, US;
GREGORY, Kenton, W., 3737 Council Crest Drive, Portland, OR 97201, US
(74) Dee, Ian Mark, Potter Clarkson LLP, Park View House, 58 The Ropewalk, Nottingham, NG1 5DD, GB

**(51) (8)** **EP 2323610 ***
***A 61H 3/04***
(30) IT 28.05.2008. MC20080019 U
(86) PCT/EP2009056222 22.05.2009.
(96) EP 09753827.6 22.05.2009. En
(87) WO2009144172 03.12.2009. 200949
(97) EP 2323610 25.05.2011. 201121 En
**(54) WALKER**
(71) Ormesa S.R.L., 1, Via A. da Sangallo, Frazione Paciana, 06034 Foligno (PG), IT
(72) MENICHINI, Luigi, 30 Via San Sebastiano, I-06034 Foligno (PG), IT
(74) Baldi, Claudio, Ing. Claudio Baldi S.r.l., Viale Cavallotti 13, P.O. Box 187, 60035 Jesi (AN), IT

**(51) (8)** **EP 2335675**
***A 61K 8/04***
***A 61K 8/06***
***A 61K 8/81***
(96) EP 09015330.5 10.12.2009. De
(97) EP 2335675 22.06.2011. 201125 De
**(54) Emulsifier-free, polymer stabilised foam formulas**
(71) Neubourg Skin Care GmbH & Co. KG, Mergenthaler Strasse 40, 48268 Greven, DE
(72) Daniels, Rolf, PROF. DR., Zur Gowiese 21, 38226 Salzgitter, DE
(74) Maiwald, Walter, Maiwald Patentanwalts GmbH, Elisenhof, Elisenstrasse 3, 80335 München, DE

**(51) (8)** **EP 2326304 ***
***A 61K 9/00***
***A 61K 47/34***
(30) US 17.07.2008. 81561 P
(86) PCT/US2009051079 17.07.2009.
(96) EP 09790608.5 17.07.2009. En
(87) WO2010009451 21.01.2010. 201003
(97) EP 2326304 01.06.2011. 201122 En
**(54) METHODS FOR ENHANCING THE STABILITY OF POLYORTHOESTERS AND THEIR FORMULATIONS**
(71) Merial Limited, 3239 Satellite Blvd., Duluth, GA, US; AP Pharma, Inc., 123 Saginaw Drive, Redwood City, CA 94063, US
(72) HANSON, Peter, 159 Woodcliff Drive, Suwanee, GA 30024, US;
ROSENTEL, Joseph, K., 10675 Branham Fields Road, Johns Creek, GA 30097, US;
BARR, John, 147 Caramel Avenue, Half Moon Bay, CA 94018, US
(74) Harding, Charles Thomas, D Young & Co LLP, 120 Holborn, London, EC1N 2DY, GB

**(51) (8)** **EP 2331065 ***
***A 61K 9/00***
***A 61K 9/06***
***A 61K 9/107***
***A 61K 31/345***
***A 61K 31/4164***
***A 61K 31/4174***
***A 61K 31/4412***
***A 61K 31/4418***
***A 61K 31/4745***
***A 61K 31/522***
***A 61K 31/569***
***A 61P 15/02***
***A 61P 15/12***
***A 61P 17/00***
(30) EP 08.10.2008. 08166058
(86) PCT/EP2009062190 21.09.2009.
(96) EP 09818802.2 21.09.2009. En
(87) WO2010040632 15.04.2010. 201015
(97) EP 2331065 15.06.2011. 201124 En
**(54) MODIFIED RELEASE EMULSIONS FOR APPLICATION TO SKIN OR VAGINAL MUCOSA**
(71) Polichem SA, 50, Val Fleuri, 1526 Luxembourg, LU
(72) MURA, Emanuela, Via Bellinzona 76, I-22100 Como, IT; MAILLAND, Federico, Strada Regina 10, CH-6900 Lugano, CH;
CERIANI, Daniela, Via Vignora 9/D, I-21050 Besano, IT
(74) Pistolesi, Roberto, et al, Dragotti & Associati Srl, Via Marina 6, 20121 Milano, IT

**(51) (8)** **EP 2331067 ***
***A 61K 9/00***
***A 61K 9/16***
***A 61K 9/70***
***A 61K 31/565***
(30) EP 08.08.2008. 08162105
US 08.08.2008. 87334 P
WO 10.02.2009. PCT/EP2009/000904
(86) PCT/EP2009060298 07.08.2009.
(96) EP 09781632.6 07.08.2009. En
(87) WO2010015713 11.02.2010. 201006
(97) EP 2331067 15.06.2011. 201124 En
**(54) PROGESTIN-CONTAINING DRUG DELIVERY SYSTEM**
(71) Bayer Schering Pharma Aktiengesellschaft, Müllerstrasse 178, 13353 Berlin, DE
(72) GENERAL, Sascha, Paulstrasse 19, 10557 Berlin, DE; TEREBESI, Ildikó, Reichensteiner Weg 5, 14195 Berlin, DE; BRACHT, Stefan, Starkstr. 29, 16548 Glienicke Nordbahn, DE;
FUNKE, Adrian, Insterburgalle 33a, 14055 Berlin, DE
(74) Plougmann & Vingtoft A/S, Sundkrogsgade 9, P.O. Box 831, 2100 CopenhagenØ, DK

**(51) (8)** **EP 2086504 ***
***A 61K 9/06***
***A 61K 31/196***
***A 61K 47/10***
***A 61K 47/32***
***A 61K 47/36***
***A 61K 47/38***
***A 61K 9/00***
(30) US 17.10.2006. 829756 P
(86) PCT/US2007081674 17.10.2007.
(96) EP 07863421.9 17.10.2007. En
(87) WO2008049020 24.04.2008. 200817
(97) EP 2086504 12.08.2009. 200933 En
**(54) DICLOFENAC GEL**
(71) Nuvo Research Inc., 7560 Airport Road, Unit 10, Mississauga, ON L4T 4H4, CA
(72) KISAK, Ed, 3525 Bayside Lane, Apt., San Diego, California 92109, US;
SINGH, Jagat, 64 Grover Drive, Toronto, Ontario M1C 4V7, CA
(74) UEXKÜLL & STOLBERG, Patentanwälte, Beselerstrasse 4, 22607 Hamburg, DE

**(51) (8)** **EP 2340016 ***
***A 61K 9/06***
***A 61K 47/34***
***A 61K 31/205***
***A 61P 17/00***
(30) EP 29.10.2008. 08167825
(86) PCT/EP2009064285 29.10.2009.
(96) EP 09753062.0 29.10.2009. En
(87) WO2010049485 06.05.2010. 201018
(97) EP 2340016 06.07.2011. 201127 En
**(54) TOPICAL FORMULATION OF 3-(2,2,2-TRIMETHYLHYDRAZINIUM) PROPIONATE DIHYDRATE**
(71) Grindeks, A Joint Stock Company, 53 Krustpils Street, 1057 Riga, LV
(72) GEORGI, Malimon, 53 Krustpils street, LV-1057 Riga, LV

**(51) (8)** **EP 2341895 ***
***A 61K 9/06***
***A 61K 9/00***
***A 61K 31/728***
(30) GB 10.09.2008. 0816496
(86) PCT/GB2009051140 09.09.2009.
(96) EP 09740188.9 09.09.2009. En
(87) WO2010029344 18.03.2010. 201011
(97) EP 2341895 13.07.2011. 201128 En
**(54) HYALURONIC ACID CRYOGEL - COMPOSITIONS, USES, PROCESSES FOR MANUFACTURING**
(71) Burdica Biomed Limited, 50 Broomhill Avenue, Burntisland, Fife KY3 0BP, GB
(72) Zhao, Xiaobin, 1 Mackenzie Road, Cambridge, Cambridgeshire CB1 2AN, GB
(74) Drysdale, Douglas Standen, Murgitroyd & Company, Scotland House, 165-169 Scotland Street, Glasgow G5 8PL, GB

**(51) (8)** **EP 2326306 ***
***A 61K 9/08***
***A 61K 47/20***
***A 61K 31/4184***
(30) US 25.09.2008. 100074 P
(86) PCT/US2009058023 23.09.2009.
(96) EP 09740213.5 23.09.2009. En
(87) WO2010036702 01.04.2010. 201013
(97) EP 2326306 01.06.2011. 201122 En
**(54) LIQUID FORMULATIONS OF BENDAMUSTINE**

(71) Cephalon, Inc., 41 Moores Road, P.O. Box 4011, Frazer, PA 19355, US
(72) DRAGER, Anthony, S., 16 Doral Ct., Thorndale, Pennsylvania 19372, US;
LABELL, Rachel, Y., 561 N. Sandy Hill Road, Coatesville, Pennsylvania 19320, US;
PATEL, Piyush, R., 716 Scott Lane, Wallingford, Pennsylvania 19086, US
(74) Hallybone, Huw George, Carpmaels & Ransford, One Southampton Row, London, WC1B 5HA, GB

**(51) (8)** **EP 1980244**
***A 61K 9/14***
***A 61K 9/26***
(30) JP 12.04.2007. 2007104477
(96) EP 08007212.7 11.04.2008. En
(97) EP 1980244 15.10.2008. 200842 En
**(54) Basis particles and orally-disintegrating tablet containing them**
(71) NIPRO CORPORATION, 9-3, Honjo-Nishi 3-Chome, Kita-ku, Osaka-shi, Osaka 531-8510, JP
(72) Sakuragi, Shiho, Nipro Corporation, 3023, Noji-cho, Kusatsu-shi, Shiga-ken 525-0055, JP;
Hoashi, Yohei, Nipro Corporation, 3023, Noji-cho, Kusatsu-shi, Shiga-ken 525-0055, JP;
Katayama, Naohisa, Nipro Corporation, 3023, Noji-cho, Kusatsu-shi, Shiga-ken 525-0055, JP;
Kai, Toshiya, Nipro Corporation, 3023, Noji-cho, Kusatsu-shi, Shiga-ken 525-0055, JP;
Ohmichi, Noami, Nipro Corporation, 3023, Noji-cho, Kusatsu-shi, Shiga-ken 525-0055, JP
(74) Schüssler, Andrea, et al, Kanzlei Huber & Schüssler, Truderinger Strasse 246, 81825 München, DE

**(51) (8)** **EP 2323626 ***
***A 61K 9/16***
***A 61K 38/18***
(30) GB 05.08.2008. 0814302
(86) PCT/EP2009060171 05.08.2009.
(96) EP 09781530.2 05.08.2009. En
(87) WO2010015665 11.02.2010. 201006
(97) EP 2323626 25.05.2011. 201121 En
**(54) PARENTERAL COMPOSITION COMPRISING MICROSPHERES WITH A DIAMETER BETWEEN 10 AND 20 MICRONS**
(71) Coretherapix Slu, Plaza de la Encina, 10-11 Nucleo 1, Planta 3a Edificio La Encina, 28760 Tres Cantos, Madrid, ES
(72) NADAL GINARD, Bernardo, Coretherapix SLU, Plaza de La Encina, No. 10-11 Núcleo 1, Planta 3a, Edificio La Encina, E-28760 Tres Cantos, Madrid, ES
(74) Teuten, Andrew John, Sagittarius IP, Taylor House, 39 High Street, Marlow, Bucks SL7 1AF, GB

**(51) (8)** **EP 2331077 ***
***A 61K 9/16***
***A 61K 9/48***
***A 61K 9/20***
***A 61K 9/50***
***A 61K 38/00***
(30) US 04.09.2008. 94370 P
(86) PCT/US2009004676 14.08.2009.
(96) EP 09789143.6 14.08.2009. En
(87) WO2010027404 11.03.2010. 201010
(97) EP 2331077 15.06.2011. 201124 En
**(54) STABLE FORLULATION COMPRISING THERAPEUTIC POLYPEPTIDES FOR ORAL ADMINISTRATION**
(71) Ironwood Pharmaceuticals, Inc., 301 Binney Street, Cambridge, MA 02142, US
(72) FRETZEN, Angelika, 7 AVON Street, Somerville, MA 02143, US;
WITOWSKI, Steven, 171 Laurel Street, Melrose, MA 02176, US;
GROSSI, Alfredo, 102 Ten Hills Road, Somerville, MA 02145, US;
ZHAO, Hong, 19 Middlebury Road, Lexington, MA 02421, US
(74) Simpson, Tobias Rutger, et al, Mathys & Squire LLP, 120 Holborn, London EC1N 2SQ, GB

**(51) (8)** **EP 2081553 ***
***A 61K 9/19***
***A 61K 47/02***
***A 61K 47/26***
***A 61K 9/00***
***A 61K 39/395***
(30) US 06.10.2006. 850362 P
US 10.10.2006. 850970 P
(86) PCT/US2007021477 05.10.2007.
(96) EP 07839335.2 05.10.2007. En
(87) WO2008045373 17.04.2008. 200816
(97) EP 2081553 29.07.2009. 200931 En
**(54) STABLE ANTIBODY FORMULATIONS**
(71) Amgen, Inc, One Amgen Center Drive, Thousand Oaks, California 91320-1799, US
(72) MCAULEY, Arnold, 6931 Lafayette Street, Moorpark, CA 93021, US;
REHDER, Douglas, 21445 Salamanca Avenue, Woodland Hills, CA 91364, US;
MATSUMURA, Masazumi, 2286 La Granada Drive, Thousand Oaks, CA 91362, US
(74) Grünecker, Kinkeldey, Stockmair & Schwanhäusser, Anwaltssozietät, Leopoldstrasse 4, 80802 München, DE

**(51) (8)** **EP 2099430 ***
***A 61K 9/20***
***A 61K 31/155***
(30) US 07.12.2006. 873928 P
US 07.12.2006. 873872 P
(86) PCT/US2007025025 06.12.2007.
(96) EP 07862611.6 06.12.2007. En
(87) WO2008073282 19.06.2008. 200825
(97) EP 2099430 16.09.2009. 200938 En
**(54) PH SENSITIVE MATRIX FORMULATION**
(71) Schering Corporation, 2000 Galloping Hill Road, Kenilworth, NJ 07033, US
(72) WAN, Jiansheng, 1 Softwood Way, Warren, NJ 07059, US;
CHEN, Xiaoming, 50 Westbrook Road, Westfield, NJ 07090, US;
GUPTA, Pranav, 806 Morris Turnpike, Apt 4G5, Short Hills, NJ 07078, US;
MONTEITH, David, 14 Pleasant View Manor Road, Pittstown, NJ 08867, US

(74) Horgan, James Michael Frederic, et al, Merck & Co., Inc., European Patent Department, Hertford Road, Hoddesdon, EN11 9BU, GB

**(51) (8)** **EP 2120883 ***
***A 61K 9/20***
***A 61K 9/28***
***A 61K 31/427***
(30) EP 07.03.2007. 07004715
(86) PCT/EP2008052655 05.03.2008.
(96) EP 08717405.8 05.03.2008. En
(87) WO2008107452 12.09.2008. 200837
(97) EP 2120883 25.11.2009. 200948 En
**(54) PHARMACEUTICAL COMPOSITION COMPRISING A SALT OF ROSIGLITAZONE**
(71) KRKA, tovarna zdravil, d.d., Novo mesto, Smarjeska cesta 6, 8501 Novo mesto, SI
(72) GERMAN, Tamara, Seidlova ulica 64, SI - Novo mesto, SI;
VRBINC, Miha, Gotna vas 20, 8000 Novo Mesto, SI;
ZUPANCIC, Silvo, Zupnca 4b, 8000 Novo Mesto, SI;
STEFANIC, Marko, Tomsiceva 14, 8340 Crnomelj, SI
(74) UEXKÜLL & STOLBERG, Patentanwälte, Beselerstrasse 4, 22607 Hamburg, DE

**(51) (8)** **EP 2328562 ***
***A 61K 9/20***
***A 61K 31/165***
***A 61K 31/41***
(30) US 24.09.2008. 99595 P
US 20.03.2009. 161799 P
(86) PCT/US2009057993 23.09.2009.
(96) EP 09792885.7 23.09.2009. En
(87) WO2010036686 01.04.2010. 201013
(97) EP 2328562 08.06.2011. 201123 En
**(54) GALENICAL FORMULATION COMPRISING ALISKIREN AND PROCESS FOR ITS PREPARATION BY MELT EXTRUSION GRANULATION**
(71) Novartis AG, Lichtstrasse 35, 4056 Basel, CH
(72) GHOSH, Indrajit, 130 New Road K-19, Parsippany, New Jersey 07054, US;
KOWALSKI, James, 38 Summit Road, Belle Mead, New Jersey 08502, US;
SNYDER, Jennifer, 16 Brook Drive North, Morris Plains, New Jersey 07950, US;
TONG, Wei-Qin, 1 Wellington Drive, Basking Ridge, New Jersey 07920, US;
VIPPAGUNTA, Sudha, 194 Patriots Road, Morris Plains, New Jersey 07950, US
(74) Gabarda Ortega, Ana Esther, et al, Novartis Pharma AG, Patent Department, 4002 Basel, CH

**(51) (8)** **EP 2328564 ***
***A 61K 9/20***
(30) US 22.09.2008. 98945 P
(86) PCT/US2009057750 22.09.2009.
(96) EP 09736332.9 22.09.2009. En
(87) WO2010033954 25.03.2010. 201012
(97) EP 2328564 08.06.2011. 201123 En
**(54) FIXED DOSE COMBINATION IN FORM OF A BILAYERED OR MONOLAYERED TABLET OF ALISKIREN AND AMLODIPINE**
(71) Novartis AG, Lichtstrasse 35, 4056 Basel, CH
(72) VALAZZA, Stephen, 10 Porsche Drive, Matawan, New Jersey 07747, US;
WAGNER, Robert Frank, 1 Cedarview Court, Hillsborough, New Jersey 08844, US;
VIPPAGUNTA, Sudha, 194 Patriots Road, Morris Plains, New Jersey 07950, US
(74) Gabarda Ortega, Ana Esther, et al, Novartis Pharma AG, Patent Department, 4002 Basel, CH

**(51) (8)** **EP 2341898 ***
***A 61K 9/20***
***A 61K 9/48***
***A 61K 38/00***
***A 61K 47/02***
***A 61K 47/18***
(30) US 04.09.2008. 94327 P
(86) PCT/US2009004685 14.08.2009.
(96) EP 09789149.3 14.08.2009. En
(87) WO2010027405 11.03.2010. 201010
(97) EP 2341898 13.07.2011. 201128 En
**(54) STABLE SOLID FORMULATIONS OF GC-C RECEPTOR AGONIST POLYPEPTIDES SUITABLE FOR ORAL ADMINISTRATION**
(71) Ironwood Pharmaceuticals, Inc., 301 Binney Street, Cambridge, MA 02142, US
(72) FRETZEN, Angelika, 7 AVON Street, Somerville, MA 02143, US;
WITOWSKI, Steven, 171 Laurel Street, Melrose, MA 02176, US;
GROSSI, Alfredo, 102 Ten Hills Road, Somerville, MA 02145, US;
ZHAO, Hong, 19 Middleby Road, Lexington, MA 02421, US
(74) Simpson, Tobias Rutger, et al, Mathys & Squire LLP, 120 Holborn, London EC1N 2SQ, GB

**(51) (8)** **EP 2323634 ***
***A 61K 9/22***
***A 61K 9/28***
***A 61K 31/404***
(30) SI 01.08.2008. 200800192
(86) PCT/EP2009005559 31.07.2009.
(96) EP 09777576.1 31.07.2009. En
(87) WO2010012482 04.02.2010. 201005
(97) EP 2323634 25.05.2011. 201121 En
**(54) ROPINIROLE COMPOSITION**
(71) KRKA, tovarna zdravil, d.d., Novo mesto, Smarjeska cesta 6, 8501 Novo mesto, SI
(72) ZADNIK, Jernej, Pionirska cesta 4, 8350 Dolenjske Toplice, SI;
VRECER, Franc, Potok 5b, 8351 Straza pri Novem mestu, SI
(74) UEXKÜLL & STOLBERG, Patentanwälte, Beselerstrasse 4, 22607 Hamburg, DE

**(51) (8)** **EP 2326312 ***
***A 61K 9/22***
***A 61K 9/28***
***A 61K 9/48***
***A 61K 31/517***
(30) SI 25.07.2008. 200800187
(86) PCT/EP2009005427 27.07.2009.
(96) EP 09777460.8 27.07.2009. En
(87) WO2010009900 28.01.2010. 201004
(97) EP 2326312 01.06.2011. 201122 En

**(54) PALIPERIDONE COMPOSITION COMPRISING SOLID MATRIX PARTICLES**
(71) KRKA, D.D., Novo Mesto, Smarjeska cesta 6, 8501 Novo mesto, SI
(72) HUDOVORNIK, Grega, Zdinja vas 2C, 8000 Novo mesto, SI;
PRESKAR, Maja, Bohoriceva 15, 8270 Krsko, SI;
VRECER, Franc, Potok 5b, 8351 Straza pri Novem mestu, SI;
PISEK, Robert, Trzaska 47, 1000 Ljubljana, SI;
PAVLI, Matej, Pregljeva ulica 80, 1000 Ljubljana, SI
(74) HOFFMANN EITLE, Patent- und Rechtsanwälte, Arabellastraße 4, 81925 München, DE

**(51) (8)** **EP 2331083 ***
***A 61K 9/50***
(30) EP 05.09.2008. 08015689
(86) PCT/EP2009061582 07.09.2009.
(96) EP 09782720.8 07.09.2009. En
(87) WO2010026254 11.03.2010. 201010
(97) EP 2331083 15.06.2011. 201124 En
**(54) PROLONGED RELEASE MULTIPARTICULATE PHARMACEUTICAL COMPOSITION COMPRISING PALIPERIDONE**
(71) KRKA, D.D., Novo Mesto, Smarjeska cesta 6, 8501 Novo mesto, SI
(72) HUDOVORNIK, Grega, Zdinja vas 2C, 8000 Novo mesto, SI;
VRECER, Franc, Potok 5b, 8351 Straza pri Novem mestu, SI;
PISEK, Robert, Trzaska 47, 1000 Ljubljana, SI;
PRESKAR, Maja, Bohoriceva 15, 8270 Krsko, SI;
KAPELE, Tomaz, Copova 17, 8340 Crnomelj, SI
(74) HOFFMANN EITLE, Patent- und Rechtsanwälte, Arabellastraße 4, 81925 München, DE

**(51) (8)** **EP 2323639 ***
***A 61K 31/01***
***A 61K 31/047***
***A 61P 17/02***
***A 61P 17/06***
***A 61K 8/30***
***A 61K 8/92***
(30) FR 16.05.2008. 0853187
(86) PCT/EP2009056021 18.05.2009.
(96) EP 09745849.1 18.05.2009. Fr
(87) WO2009138517 19.11.2009. 200947
(97) EP 2323639 25.05.2011. 201121 Fr
**(54) EMOLLIENT COMPOSITION**
(71) Pierre Fabre Dermo-Cosmétique, 45, place Abel-Gance, 92100 Boulogne-Billancourt, FR
(72) FABRE, Pierre, 31 avenue d'Albi, F-81100 Castres, FR;
PRZYBYLSKI, Christophe, 10 avenue de Verdun, F-31290 Villefranche de Lauragais, FR;
CORDOLIANI, Jean-François, 2 rue Paul Gauguin, F-31570 Sainte Foy d'Aigrefeuille, FR;
KOPEC, Marion, Appartement B36, 53 Grande Rue Saint Michel, F-31400 Toulouse, FR
(74) Ahner, Francis, et al, Cabinet Régimbeau, 20, rue de Chazelles, 75847 Paris Cedex 17, FR

**(51) (8)** **EP 2124914 ***
***A 61K 31/137***
***A 61K 31/4164***
***A 61P 31/10***
(30) US 21.12.2006. 644434
(86) PCT/US2007026207 21.12.2007.
(96) EP 07867962.8 21.12.2007. En
(87) WO2008079355 03.07.2008. 200827
(97) EP 2124914 02.12.2009. 200949 En
**(54) METHOD AND SYSTEM FOR ENHANCING SELF-TREATMENT OF ONYCHOMYCOSIS**
(71) MSD Consumer Care, Inc., 3030 Jackson Avenue, Memphis TN 38151, US
(72) CANTOR, Susan Beth, 14 Settlers Lane, Westfield, NJ 07090, US;
MORGAN, Jay Philip, 2375 Logwood Briar Cove N., Collierville, TN 38017, US;
NEUMANN, Robert Stephen, 300 Somerville Road, Basking Ridge, NJ 07920, US;
GOLDBERG, Glenn, 69 April Lane, Nanuet, NY 10954, US;
NOWAK, Robert T., 30 Bayberry Lane, New Providence, NJ 07974, US;
FRANK, Doreen, 8 Briar Lane, Lebanon, NJ 08833, US
(74) Quelle-Fontijn, Monique, et al, N.V. Organon, Global Patent Department, P.O. Box 20, Wethouder van Eschstraat 1, 5340 BH Oss, NL

**(51) (8)** **EP 2323642 ***
***A 61K 31/14***
***A 61K 31/19***
***A 61K 31/195***
***A 61K 31/352***
***A 61K 31/473***
***A 61K 31/49***
***A 61K 31/5415***
***A 61K 31/56***
***A 61K 31/60***
***A 61P 27/02***
(30) IT 28.08.2008. RM20080472
(86) PCT/IT2009000392 27.08.2009.
(96) EP 09748494.3 27.08.2009. En
(87) WO2010023705 04.03.2010. 201009
(97) EP 2323642 25.05.2011. 201121 En
**(54) USE OF ENHANCERS, POSSIBLY ASSOCIATED TO RIBOFLAVIN, AS WELL AS CORRESPONDING OPHTHALMIC COMPOSITIONS FOR CORNEAL CROSS-LINKING IN THE TREATMENT OF THE KERATOCONUS OR OF OTHER CORNEAL ECTASIC DISORDERS**
(71) Sooft Italia Spa, Contrada Molino, 17, 63025 Montegiorgio, IT
(72) STAGNI, Marcello, Via A. S. Fulci, 31G, I-95127 Catania, IT;
STAGNI, Edoardo, Via A. S. Fulci, 31G, I-95127 Catania, IT;
FILIPPELLO, Massimo, Corso Italia 22, I-95129 Catania, IT;
CAVALLO, Giovanni, Via delle Tartane 45, I-00122 Roma, IT;
SODO, Eugenio, Piazza Eschilo 10, I-00125 Roma, IT
(74) Sarpi, Maurizio, et al, Studio Ferrario S.r.l., Via Collina, 36, 00187 Roma, IT

**(51) (8)** **EP 2186511**
***A 61K 31/15***
***A 61P 25/00***
(96) EP 08291063.9 13.11.2008. En
(97) EP 2186511 19.05.2010. 201020 En
**(54) Method of treating sleep disorders using eplivanserin**
(71) Sanofi-Aventis, 174 Avenue de France, 75013 Paris, FR
(72) Prieur, Amélie, sanofi-aventis, Dépt. Brevets, 174 av. de France 75013, Paris, FR;
Rein, Werner, sanofi-aventis, Dépt. Brevets, 174 av. de France 75013, Paris, FR;
Verpillat, Patrice, sanofi-aventis, Dépt. Brevets, 174 av. de France 75013, Paris, FR;
Weinling, Estelle, sanofi-aventis, Dépt. Brevets, 174 av. de France 75013, Paris, FR
(74) Gaslonde, Aude, et al, Sanofi-Aventis, Département Brevets, 174, Avenue de France, 75013 Paris, FR

**(51) (8)** **EP 2323646 ***
***A 61K 31/18***
***A 61P 15/06***
(30) EP 28.07.2008. 08161229
US 28.07.2008. 84082 P
(86) PCT/IB2009053256 27.07.2009.
(96) EP 09786717.0 27.07.2009. En
(87) WO2010013187 04.02.2010. 201005
(97) EP 2323646 25.05.2011. 201121 En
**(54) USE OF STEROID SULFATASE INHIBITORS FOR THE TREATMENT OF PRETERM LABOR**
(71) PregLem S.A., 12 Chemin des Aulx, 1228 Plan-les-Ouates, CH
(72) LOUMAYE, Ernest, Domaine de Quincy 32, Route de l'église, F-74140 Massongy, FR;
CAYRON-ELIZONDO, Valérie, 569 route des Manessieres, F-74160 Collonges-sous-Salve, FR;
GOTTELAND, Jean-Pierre, 285 Route de la Croisette, F-74160 Beaumont, FR
(74) Reuteler, Raymond Werner, Reuteler & Cie SA, Chemin de la Vuarpillire 29, CH-1260 Nyon, CH

**(51) (8)** **EP 2326319 ***
***A 61K 31/185***
(30) KE 04.08.2008. 7822008
(86) PCT/KE2009000019 10.07.2009.
(96) EP 09805104.8 10.07.2009. En
(87) WO2010016628 11.02.2010. 201006
(97) EP 2326319 01.06.2011. 201122 En
**(54) CONJUGATED SURAMIN AMINO COMPOUNDS FOR MEDICAL CONDITIONS**
(71) Opiyo, Sammy, P.O.Box 69512, 00400 Nairobi, KE
(72) Opiyo, Sammy, P.O.Box 69512, 00400 Nairobi, KE
(74) Crowhurst, Charlotte Waveney, et al, Potter Clarkson LLP, Park View House, 58 The Ropewalk, Nottingham, NG1 5DD, GB

**(51) (8)** **EP 2324826**
***A 61K 31/198***
***A 23L 1/22***
***A 23L 1/305***
***A 61K 9/10***
***A 61K 9/14***
***A 61K 9/20***
***A 61K 9/48***
***A 61K 47/08***
***A 61K 47/12***
***A 61K 47/36***
***A 61K 47/38***
***A 61P 1/14***
***A 61P 3/02***
***A 61P 17/14***
***A 61P 17/16***
***A 61P 21/00***
***A 61P 37/04***
***A 61P 43/00***
(86) PCT/JP2008064401 11.08.2008.
(96) EP 08808886.9 11.08.2008. Ja
(87) WO2010018614 18.02.2010. 201007
(97) EP 2324826 25.05.2011. 201121 En
**(54) HYDROPHILIC AMINO ACID-CONTAINING PREPARATION HAVING IMPROVED TASTE**
(71) Ajinomoto Co., Inc., 15-1, Kyobashi 1-chome, Chuo-ku, Tokyo 104-8315, JP
(72) TANAKA, Masayuki, c/o AJINOMOTO CO. INC., 1-1 Suzuki-cho, Kawasaki-ku, Kawasaki-shi, Kanagawa 210-8681, JP;
KITAZAWA, Manabu, c/o AJINOMOTO CO. INC., 1-1 Suzuki-cho, Kawasaki-ku, Kawasaki-shi, Kanagawa 210-8681, JP;
MAKINO, Chisato, c/o AJINOMOTO CO. INC., 1-1 Suzuki-cho, Kawasaki-ku, Kawasaki-shi, Kanagawa 210-8681, JP;
TAKANOSU, Kazuhiro, c/o AJINOMOTO CO. INC., 1-1 Suzuki-cho, Kawasaki-ku, Kawasaki-shi, Kanagawa 210-8681, JP
(74) Nicholls, Kathryn Margaret, et al, Mewburn Ellis LLP, 33 Gutter Lane, London, EC2V 8AS, GB

**(51) (8)** **EP 2331091 ***
***A 61K 31/216***
***A 61K 31/513***
***A 61P 35/00***
***A 61P 35/04***
(30) EP 18.09.2008. 08164589
EP 23.01.2009. 09151211
(86) PCT/EP2009061948 15.09.2009.
(96) EP 09783031.9 15.09.2009. En
(87) WO2010031766 25.03.2010. 201012
(97) EP 2331091 15.06.2011. 201124 En
**(54) PHARMACEUTICAL COMBINATION OF 1-(2-TETRAHYDROFURYL)-5-FLUOROURACIL AND CAFFEIC ACID PHENETHYL ESTER FOR ORAL TREATING OF TUMORS**
(71) Grindeks, A Joint Stock Company, 53 Krustpils Street, 1057 Riga, LV;
Chemco Ventures (Cyprus) Limited, Dilou 12, 1st floor, Flat / Office 3, Nicosia P.C. 1085, CY
(72) STONANS, Ilmars, Krustpils Street 53, LV-1057 Riga, LV;
KALVINS, Ivars, Libiesu Street 25, LV-15052 Ikskile, LV;

SESTAKOVA, Irina, Aizkraukles Street 21, LV-1006 Riga, LV

**(51) (8)** **EP 2120920 ***
***A 61K 31/22***
***C 07C 53/00***
***A 61P 25/00***
***A 61P 29/00***
(30) US 20.02.2007. 890701 P
(86) PCT/US2008054456 20.02.2008.
(96) EP 08730288.1 20.02.2008. En
(87) WO2008103753 28.08.2008. 200835
(97) EP 2120920 25.11.2009. 200948 En
**(54) OXYLIPINS FROM LONG CHAIN POLYUNSATURATED FATTY ACIDS AND METHODS OF MAKING AND USING THE SAME**
(71) Martek Biosciences Corporation, 6480 Dobbin Road, Columbia, MD 21045, US
(72) ARTERBURN, Linda, 5111 Avoca Avenue, Ellicott City, MD 21043, US;
BARCLAY, William, 7356 Panorama Drive, Boulder, CO 80303, US;
DANGI, Bindi, 6428 Frothingham Court, Elkridge, MD 21075, US;
FLATT, James, 1664 Oakmoor Heights, Colorado Springs, CO 80906, US;
LEE, Jung, 1362 Northwyck Court, McLean, VA 22102, US;
VINJAMOORI, Dutt, 306 West Manor Drive, Chesterfield, MO 63017, US;
VAN ELSWYK, Mary, 10350 Macedonia Street, Longmont, CO 80503, US
(74) Mallalieu, Catherine Louise, et al, D Young & Co LLP, 120 Holborn, London EC1N 2DY, GB

**(51) (8)** **EP 2323647 ***
***A 61K 31/23***
***A 61P 9/06***
(30) EP 07.08.2008. 08161994
(86) PCT/EP2009005347 23.07.2009.
(96) EP 09777388.1 23.07.2009. En
(87) WO2010015335 11.02.2010. 201006
(97) EP 2323647 25.05.2011. 201121 En
**(54) LONG-TERM TREATMENT OF SYMPTOMATIC HEART FAILURE**
(71) S P A SOCIETA' PRODOTTI ANTIBIOTICI S.p.a., Via Biella, 8, 20143 Milano, IT;
Sixterpharma S.r.l., Via Arbia, 15, 00199 Roma, IT
(72) CAVAZZA, Claudio, Piazza Campitelli 2, I-00186 Roma, IT;
CACCIA, Maria, Giovanna, Via del Navaione 8, I-22069 Rovellasca (Como), IT
(74) Minoja, Fabrizio, Bianchetti Bracco Minoja S.r.l., Via Plinio, 63, 20129 Milano, IT

**(51) (8)** **EP 2326324 ***
***A 61K 31/343***
***A 61P 9/10***
***A 61K 9/28***
(30) EP 07.08.2008. 08290761
US 11.08.2008. 87803 P
(86) PCT/IB2009006831 03.08.2009.
(96) EP 09786247.8 03.08.2009. En
(87) WO2010015939 11.02.2010. 201006
(97) EP 2326324 01.06.2011. 201122 En
**(54) USE OF DRONEDARONE FOR THE PREPARATION OF A MEDICAMENT FOR THE PREVENTION OF STROKE OR TRANSIENT ISCHEMIC ATTACK**
(71) Sanofi-Aventis, 174 Avenue de France, 75013 Paris, FR
(72) RADZIK, Davide, c/o Sanofi-Aventis, Patent Department, 174 avenue de France, F-75013 Paris, FR;
VAN EICKELS, Martin, C/o Sanofi-aventis Deutschland GmbH, 65926 Frankfurt, DE;
GAUDIN, Christophe, c/o Sanofi-Aventis, Patent Department, 174 avenue de France, 75013 Paris, FR;
HAMDANI, Nacéra, c/o Sanofi-Aventis, Patent Department, 174 avenue de France, 75013 Paris, FR
(74) Bouron, Estelle, et al, Sanofi-Aventis, Département Brevets, 174, avenue de France, 75013 Paris, FR

**(51) (8)** **EP 2337559 ***
***A 61K 31/343***
***A 61K 31/495***
***A 61P 9/06***
(30) US 27.10.2008. 108776 P
US 04.09.2008. 94359 P
(86) PCT/US2009055924 03.09.2009.
(96) EP 09792242.1 03.09.2009. En
(87) WO2010028173 11.03.2010. 201010
(97) EP 2337559 29.06.2011. 201126 En
**(54) METHOD OF TREATING ATRIAL FIBRILLATION**
(71) Gilead Sciences, Inc., 333 Lakeside Drive, Foster City, CA 94404, US
(72) ANTZELEVICH, Charles, 101 Sylvan Way, New Hartford, NY 13413, US;
BURASHNIKOV, Alexander, 2150 Bleecker Street, Utica, NY 13501, US;
SHRYOCK, John, 2313 Vines Court, East Palo Alto, CA 94303, US;
RAJAMANI, Sridharan, 2000 Walnut Avenue, Q101, Fremont, CA 94538, US;
BELARDINELLI, Luiz, 205 Manzanita Ave., Palo Alto, CA 94306, US
(74) Schnappauf, Georg, Dr. Volker Vossius, Patent- und Rechtsanwaltskanzlei, Geibelstrasse 6, 81679 München, DE

**(51) (8)** **EP 2033641**
***A 61K 31/353***
***A 61P 39/00***
(96) EP 07113610.5 01.08.2007. En
(97) EP 2033641 11.03.2009. 200911 En
**(54) Process of preparation of extracts rich in proanthocyanidins**
(71) Ferlux S.A., 24 Avenue d'Aubire, 63800 Cournon d'Auvergne, FR
(72) Soulier, Chrystle, Les petits ros 26 bis, rue Marie Curie, F-63 960, VEYRE MONTON, FR;
Alcouffe, Natacha, Pavillon 18 8, route de Theix, F-63 122, ST GENES CHAMPANELLE, FR;
Laplaige, Gilles, 11 rue de l'Hôtel de Ville, F-30800, ST GILLES, FR
(74) Gervasi, Gemma, et al, Notarbartolo & Gervasi S.p.A., Corso di Porta Vittoria 9, 20122 Milano, IT

**(51) (8)** **EP 2323650 ***
***A 61K 31/40***
***A 61K 31/4025***
***A 61K 31/403***
***A 61K 31/422***
***A 61K 31/4375***
***A 61K 31/4439***
***A 61K 31/4985***
***A 61K 31/5025***
***A 61K 31/506***
***A 61K 31/513***
***A 61K 31/522***
***A 61P 3/10***
(30) US 06.08.2008. 86620 P
EP 07.08.2008. 08161989
EP 16.10.2008. 08166827
US 16.10.2008. 105915 P
(86) PCT/EP2009060170 05.08.2009.
(96) EP 09781529.4 05.08.2009. En
(87) WO2010015664 11.02.2010. 201006
(97) EP 2323650 25.05.2011. 201121 En
**(54) TREATMENT FOR DIABETES IN PATIENTS INAPPROPRIATE FOR METFORMIN THERAPY**
(71) Boehringer Ingelheim International GmbH, Binger Strasse 173, 55216 Ingelheim am Rhein, DE
(72) DUGI, Klaus, Boehringer Ingelheim GmbH, CD Patents, Binger Str. 173, 55216 Ingelheim Am Rhein, DE;
GRAEFE-MODY, Eva Ulrike, Boehringer Ingelheim GmbH, CD Patents, Binger Str. 173, 55216 Ingelheim Am Rhein, DE;
HARPER, Ruth, Boehringer Ingelheim GmbH, CD Patents, Binger Str. 173, 55216 Ingelheim Am Rhein, DE;
WOERLE, Hans-Juergen, Boehringer Ingelheim GmbH, CD Patents, Binger Str. 173, 55216 Ingelheim Am Rhein, DE
(74) Hammann, Heinz, et al, Boehringer Ingelheim Pharma GmbH & Co. KG, Binger Strasse 173, 55216 Ingelheim am Rhein, DE

**(51) (8)** **EP 2326326 ***
***A 61K 31/40***
***A 61K 31/4985***
***A 61K 31/403***
***A 61K 31/422***
***A 61K 31/44***
***A 61K 31/473***
***A 61K 31/496***
***A 61K 31/53***
***A 61K 31/522***
***A 61K 9/20***
***A 61P 17/02***
***A 61K 31/4196***
(30) WO 15.08.2008. PCT/EP2008/060740
EP 08.01.2009. 09150252
EP 19.05.2009. 09160682
(86) PCT/EP2009060521 13.08.2009.
(96) EP 09781825.6 13.08.2009. En
(87) WO2010018217 18.02.2010. 201007
(97) EP 2326326 01.06.2011. 201122 En
**(54) PURIN DERIVATIVES FOR USE IN THE TREATMENT OF FAB-RELATED DISEASES**
(71) Boehringer Ingelheim International GmbH, Binger Strasse 173, 55216 Ingelheim am Rhein, DE
(72) KLEIN, Thomas, Boehringer Ingelheim GmbH, CD Patents, Binger Str. 173, 55216 Ingelheim am Rhein, DE;
MARK, Michael, Boehringer Ingelheim GmbH, CD Patents, Binger Str. 173, 55216 Ingelheim am Rhein, DE
(74) Hammann, Heinz, Boehringer Ingelheim GmbH, Corporate Patents, Binger Strasse 173, 55216 Ingelheim am Rhein, DE

**(51) (8)** **EP 2340021 ***
***A 61K 31/40***
***A 61K 31/4025***
***A 61P 35/00***
***C 07D 207/16***
***C 07D 401/06***
***C 07D 401/12***
***C 07D 401/14***
***C 07D 403/06***
***C 07D 403/12***
***C 07D 405/06***
***C 07D 405/12***
***C 07D 409/04***
***C 07D 409/12***
***C 07D 413/12***
***C 07D 417/12***
(30) US 18.09.2008. 97884 P
US 15.07.2009. 225633 P
(86) PCT/EP2009061610 08.09.2009.
(96) EP 09782745.5 08.09.2009. En
(87) WO2010031713 25.03.2010. 201012
(97) EP 2340021 06.07.2011. 201127 En
**(54) SUBSTITUTED PYRROLIDINE-2-CARBOXAMIDES**
(71) F. Hoffmann-La Roche AG, Grenzacherstrasse 124, 4070 Basel, CH
(72) DING, Qingjie, 23 Sterling Drive, Bridgewater, NJ 08807, US;
JIANG, Nan, 11 Henning Drive, Fairfield, NJ 07004, US;
LIU, Jin-Jun, 50 Highmount Avenue, Warren, NJ 07059, US;
ROSS, Tina, Morgan, 101 Rosemont Lane, Royersford, PA 19468, US;
ZHANG, Jing, 1621 Carlton Drive, Parsippany, NJ 07054, US;
ZHANG, Zhuming, 59 Wesley Road, Hillsborough, NJ 08844, US
(74) Beyermann, Jochen Carl, F. Hoffmann-La Roche AG, CLP - Patent Department, Grenzacherstrasse 124, 4070 Basel, CH

**(51) (8)** **EP 2068869 ***
***A 61K 31/41***
***C 07D 257/04***
(30) US 06.10.2006. 849873 P
(86) PCT/US2007021497 05.10.2007.
(96) EP 07870771.8 05.10.2007. En
(87) WO2008063287 29.05.2008. 200822
(97) EP 2068869 17.06.2009. 200925 En
**(54) NOVEL IMIDAZOTHIAZOLES AND IMIDAZOXAZOLES**
(71) ABBOTT LABORATORIES, 100 Abbott Park Road, Abbott Park, IL 60064, US
(72) BORHANI, David W., 109 Ridge Road, Hartsdale, NY 10530, US;
CALDERWOOD, David J., 4 McCarthy Circle, Framingham, MA 01702, US;
FRANK, Kristine E., 8 Pinewood Lane, Worcester, MA 01609, US;

DAVIS, Heather M., 19 Lovett Road, Oxford, MA 01540, US;
JOSEPHSOHN, Nathan S., 217 West Springfield - 4, Boston, MA 02118, US;
SKINNER, Barbara S., 509 Plantation Street, Apt. 404, Worcester, MA 01605, US
(74) Modiano, Micaela Nadia, et al, Modiano Josif Pisanty & Staub Ltd, Thierschstrasse 11, 80538 München, DE

**(51) (8)** **EP 2335701**
***A 61K 31/4168***
***A 61K 31/4178***
***C 07D 233/88***
***C 07D 239/22***
***C 07D 271/06***
***C 07D 401/04***
***C 07D 401/10***
***C 07D 401/12***
***C 07D 401/14***
***C 07D 403/06***
***C 07D 403/10***
***C 07D 403/14***
***C 07D 405/06***
***C 07D 405/14***
***C 07D 407/14***
***C 07D 409/06***
***C 07D 413/12***
***C 07D 413/14***
***C 07D 417/12***
***A 61P 25/00***
***A 61P 31/00***
(30) US 15.12.2003. 529535 P
(96) EP 10183357.2 13.12.2004. En
(97) EP 2335701 22.06.2011. 201125 En
**(54) Heterocyclic aspartyl protease inhibitors**
(71) Schering Corporation, 2000 Galloping Hill Road, Kenilworth, NJ 07033-0530, US;
Pharmacopeia, LLC, 10275 Science Center Drive, San Diego, CA 92121, US
(72) Zhu, Zhaoning, 6 Cypress Court, Plainsboro, NJ 08536, US;
McKittrick, Brian, 14 Millbrook Road, New Vernon, NJ 07976, US;
Sun, Zhong-Yue, 12 Straton Court, Parlin, NJ 08859, US;
Ye, Yuanzan, C., 103 Othen Street, Edison, NJ 08817, US;
Strickland, Corey, 825 Newmans Lane, Martinsville, NJ 08836, US;
Smith, Elizabeth, 166 Grove Street, Verona, NJ 07044, US;
Stamford, Andrew, 27 Overlook Road, Chatham Township, NJ 07928, US;
Greenlee, William, J, 115 Herrick Avenue, Teaneck, NJ 07666, US;
Wu, Yusheng, 235 East 40th Street Apt. 20C, New York, NY 10016, US;
Iserloh, Ulrich, 1110 Park Avenue Apt. 2L, Hoboken, NJ 07030, US;
Mazzola, Robert, 6 Greenwich Church Road, Stewartsville, NJ 08886, US;
Caldwell, John, 86 Upper Lakeview Avenue, Ringwood, NJ 07456, US;
Cumming, Jared, 417 Center Street, Garwood, NJ 07027, US;
Wang, Lingyan, 41 Cortland Drive, East Brunswick, NJ 08816, US;
Guo, Tao, 1606 Dahlia Circle, Dayton, NJ 08810, US;
Le, Thuy, X. H., 16 Black Gum Drive, Monmouth Junction, NJ 08852, US;
Saionz, Kurt, W, 508 Linden Place, Cranford, NJ 07016, US;
Babu, Suresh, D., 1407 Aspen Drive, Plainsboro, NJ 08536, US;
Voigt, Johannes H., 10 Willow Street, Cranfordn, NJ 07016, US;
Hunter, Rachael C., 1000 Hedgerow Circle, Wayne, PA 19087, US
(74) Bowman, Paul Alan, et al, Mathys & Squire LLP, 120 Holborn, GB-London EC1N 2SQ, GB

**(51) (8)** **EP 2343069**
***A 61K 31/4168***
***A 61K 31/4178***
***C 07D 233/88***
***C 07D 239/22***
***C 07D 271/06***
***C 07D 401/04***
***C 07D 401/10***
***C 07D 401/12***
***C 07D 401/14***
***C 07D 403/06***
***C 07D 403/10***
***C 07D 403/14***
***C 07D 405/06***
***C 07D 405/14***
***C 07D 407/14***
***C 07D 409/06***
***C 07D 413/12***
***C 07D 413/14***
***C 07D 417/12***
***A 61P 25/00***
***A 61P 31/00***
(30) US 15.12.2003. 529535 P
(96) EP 10183450.5 13.12.2004. En
(97) EP 2343069 13.07.2011. 201128 En
**(54) Heterocyclic aspartyl protease inhibitors**
(71) Schering Corporation, 2000 Galloping Hill Road, Kenilworth, NJ 07033, US;
Pharmacopeia, LLC, 10275 Science Center Drive, San Diego, CA 92121, US
(72) Zhu, Zhaoning, 6 Cypress Court, Plainsboro, NJ 08536, US;
McKittrick, Brian, 14 Millbrook Road, New Vernon, NJ 07976, US;
Sun, Zhong-Yue, 12 Straton Court, Parlin, NJ 08859, US;
Ye, Yuanzan, C., 11 Michael Street, Jamesburg, NJ 08831, US;
Strickland, Corey, 825 Newmans Lane, Martinsville, NJ 08836, US;
Smith, Elizabeth, 166 Grove Street, Verona, NJ 07044, US;
Stamford, Andrew, 27 Overlook Road, Chatham Township, NJ 07928, US;
Greenlee, William, J, 115 Herrick Avenue, Teaneck, NJ 07666, US;
Wu, Yusheng, 235 East 40th Street Apt. 20C, New York, NY 10016, US;
Iserloh, Ulrich, 1110 Park Avenue Apt. 2L, Hoboken, NJ 07030, US;
Mazzola, Robert, 6 Greenwich Church Road, Stewartsville, NJ 08886, US;
Caldwell, John, 86 Upper Lakeview Avenue, Ringwood, NJ 07456, US;

Cumming, Jared, 417 Center Street, Garwood, NJ 07027, US;
Wang, Lingyan, 41 Cortland Drive, East Brunswick, NJ 08816, US;
Guo, Tao, 1606 Dahlia Circle, Dayton, NJ 08810, US;
Le, Thuy, X. H., 16 Black Gum Drive, Monmouth Junction, NJ 08852, US;
Saionz, Kurt, W, 508 Linden Place, Cranford, NJ 07016, US;
Babu, Suresh, D., 1407 Aspen Drive, Plainsboro, NJ 08536, US;
Voigt, Johannes H., 10 Willow Street, Cranfordn, NJ 07016, US;
Hunter, Rachael C., 1000 Hedgerow Circle, Wayne, PA 19087, US
(74) Bowman, Paul Alan, et al, Mathys & Squire LLP, 120 Holborn, London EC1N 2SQ, GB

**(51) (8)** **EP 2332535**
***A 61K 31/4184***
***A 61K 31/4422***
***A 61K 47/12***
***A 61K 47/22***
***A 61P 1/00***
***A 61P 1/02***
***A 61P 1/04***
***A 61P 1/14***
***A 61P 3/00***
***A 61P 3/04***
***A 61P 3/06***
***A 61P 3/12***
***A 61P 5/50***
***A 61P 7/00***
***A 61P 7/02***
***A 61P 7/10***
***A 61P 9/00***
***A 61P 9/06***
***A 61P 9/08***
***A 61P 9/10***
(30) US 25.09.2008. 100108 P
(86) PCT/JP2009066690 25.09.2009.
(96) EP 09816220.9 25.09.2009. Ja
(87) WO2010035806 01.04.2010. 201013
(97) EP 2332535 15.06.2011. 201124 En
**(54) SOLID PHARMACEUTICAL COMPOSITION**
(71) Takeda Pharmaceutical Company Limited, 1-1 Doshomachi 4-chome, Chuo-ku, Osaka-shi, Osaka 541-0045, JP
(72) HIRATA, Kazuhiro, c/o TAKEDA PHARMACEUTICAL COMPANY LIMITED, 17-85, Jusohonmachi 2-chome, Yodogawa-ku, Osaka-shi, Osaka 532-8686, JP;
NOMURA, Junya, c/o TAKEDA PHARMACEUTICAL COMPANY LIMITED, 17-85, Jusohonmachi 2-chome, Yodogawa-ku, Osaka-shi, Osaka 532-8686, JP;
TANOUE, Yutaka, c/o TAKEDA PHARMACEUTICAL COMPANY LIMITED, 17-85, Jusohonmachi 2-chome, Yodogawa-ku, Osaka-shi, Osaka 532-8686, JP
(74) Dossmann, Gérard, Casalonga & Partners, Bayerstrasse 71-73, 80335 München, DE

**(51) (8)** **EP 2334299 ***
***A 61K 31/437***
***A 61K 45/06***
(30) DK 01.09.2008. 200801198
DK 16.10.2008. 200801443
(86) PCT/DK2008050264 28.10.2008.
(96) EP 08844585.3 28.10.2008. En
(87) WO2009056146 07.05.2009. 200919
(97) EP 2334299 22.06.2011. 201125 En
**(54) PHARMACEUTICAL COMPOSITION COMPRISING GABOXADOL AND AN INHIBITOR OF PATL OR OAT**
(71) H. Lundbeck A/S, Ottiliavej 9, 2500 Valby, DK
(72) LARSEN, Mie, Pagteroldvej 56b, DK-2650 Hvidovre, DK;
NIELSEN, Carsten, Uhd, Zlandsgade 53, 3. tv., DK-2300 Copenhagen S, DK;
LARSEN, Birger, Brodin, Carstensgade 80, DK-1770 Copenhagen V, DK;
HOLM, Rene, Bakkeager 11, DK-4040 Jyllinge, DK
(74) Conrad, Lars Sparre, et al, H. Lundbeck A/S, Ottiliavej 9, 2500 Valby, DK

**(51) (8)** **EP 2323657 ***
***A 61K 31/44***
***A 61P 27/00***
***A 61P 27/06***
(30) EP 08.08.2008. 08425559
(86) PCT/EP2009060197 06.08.2009.
(96) EP 09781551.8 06.08.2009. En
(87) WO2010015672 11.02.2010. 201006
(97) EP 2323657 25.05.2011. 201121 En
**(54) OPHTHALMIC PHARMACEUTICAL COMPOSITIONS COMPRISING SORAFENIB FOR THE TREATMENT OF NEOANGIOGENIC PATHOLOGIES OF THE EYE**
(71) S.I.F.I. Societa' Industria Farmaceutica Italiana, Via Ercole Patti 36, Frazione Lavinaio, 95025 Aci S. Antonio, IT
(72) MAZZONE, Maria Grazia, Via Carcagnolo 49, I-95024 Acireale, IT;
PAPA, Vincenzo, Via Generale Nobile 1, I-95027 San Gregorio Di Catania, IT;
GIULIANO, Francesco, Via Delle Sciare 55, I-95037 S. Giovanni La Punta, IT;
MARRANO, Manuela, Via G. Garibaldi 298, I-95029 Viagrande, IT
(74) Palladino, Saverio Massimo, et al, Notarbartolo & Gervasi S.p.A., Corso di Porta Vittoria, 9, 20122 Milano, IT

**(51) (8)** **EP 2324831**
***A 61K 31/4412***
***A 61P 11/00***
(30) US 04.12.2009. 266815 P
US 08.01.2010. 684879
(96) EP 10250379.4 03.03.2010. En
(97) EP 2324831 25.05.2011. 201121 En
**(54) Methods of administering pirfenidone therapy**
(71) Intermune, Inc., 3280 Bayshore Boulevard, Brisbane, CA 94005-1021, US
(72) Bradford, Williamson Ziegler, PO Box 566, Ross, California 94957, US;
Szwarcberg, Javier, 2173 Bunker Hill Drive, San Mateo, California 94402, US
(74) Pilkington, Stephanie Joan, et al, Potter Clarkson LLP, Park View House, 58 The Ropewalk, Nottingham, NG1 5DD, GB

**(51) (8)** **EP 2343070**
***A 61K 31/4412***
***A 61P 11/00***
(30) US 10.11.2008. 113107 P
US 27.07.2009. 228943 P
US 03.09.2009. 553292
US 22.04.2009. 428393
(96) EP 11001414.9 06.11.2009. En
(97) EP 2343070 13.07.2011. 201128 En
**(54) Pirfenidone treatment for patients with atypical liver function**
(71) Intermune, Inc., 3280 Bayshore Boulevard, Brisbane, CA 94005-1021, US
(72) Bradford, Williamson Ziegler, PO Box 566, Ross, California 94957, US;
Szwarcberg, Javier, 2173 Bunker Hill Drive, San Mateo, California 94402, US
(74) Pilkington, Stephanie Joan, Potter Clarkson LLP, Park View House, 58 The Ropewalk, Nottingham, NG1 5DD, GB

**(51) (8)** **EP 2331097** *
***A 61K 31/445***
***C 07D 211/06***
(30) US 21.08.2008. 90630 P
(86) PCT/US2009054569 21.08.2009.
(96) EP 09808855.2 21.08.2009. En
(87) WO2010022304 25.02.2010. 201008
(97) EP 2331097 15.06.2011. 201124 En
**(54) METHODS FOR TREATING CNS DISORDERS**
(71) Richter Gedeon Nyrt., Gyömröi út 19-21., 1103 Budapest, HU
(72) BANERJEE, Pradeep, 105 Nostrand Road, Hillsborough, NJ 08884, US
(74) HOFFMANN EITLE, Patent- und Rechtsanwälte, Arabellastraße 4, 81925 München, DE

**(51) (8)** **EP 2328583** *
***A 61K 31/4523***
***A 61P 13/00***
(30) EP 19.08.2008. 08290787
(86) PCT/IB2009006816 17.08.2009.
(96) EP 09786239.5 17.08.2009. En
(87) WO2010020881 25.02.2010. 201008
(97) EP 2328583 08.06.2011. 201123 En
**(54) NEW THERAPEUTIC USE OF DROTAVERINE**
(71) Sanofi-Aventis, 174 Avenue de France, 75013 Paris, FR
(72) LLUEL, Philippe, 55 Rue Jean Bouin, F-31520 Ramonville Saint Agne, FR;
PALEA, Stefano, 8 Avenue du Petit Prince, Bat Sequoia, F-31400 Toulouse, FR;
SOFEIR, Maurice, c/o Sanofi-Aventis, Département Brevets, 174 avenue de France, F-75013 Paris, FR
(74) Weber, Mathieu, et al, Sanofi-Aventis, Département Brevets, 174, avenue de France, 75013 Paris, FR

**(51) (8)** **EP 2241318**
***A 61K 31/47***
(30) US 01.05.2006. 797076 P
(96) EP 10007687.6 30.04.2007. En
(97) EP 2241318 20.10.2010. 201042 En
**(54) Method for treatment of constipation-predominant irritable bowel syndrome**
(71) Napo Pharmaceuticals, Inc., 250 E. Grand Avenue, Suite 90, South San Francisco, CA 94080-4824, US
(72) Quart, Barry, 3273 Violet Ridge, Encinitas, CA 92024, US;
Rosenbaum, David, 121 Winslow Road, Waban, MA 02468, US
(74) Hiebl, Inge Elisabeth, et al, Kraus & Weisert, Patent- und Rechtsanwälte, Thomas-Wimmer-Ring 15, 80539 München, DE

**(51) (8)** **EP 2341906** *
***A 61K 31/47***
***A 61K 31/443***
***A 61K 31/403***
***A 61K 31/506***
***A 61K 31/519***
***A 61K 35/12***
***A 61P 35/00***
(30) US 01.10.2008. 101824 P
(86) PCT/US2009059254 01.10.2009.
(96) EP 09823989.0 01.10.2009. En
(87) WO2010051127 06.05.2010. 201018
(97) EP 2341906 13.07.2011. 201128 En
**(54) HEMATOPOIETIC PROTECTION AGAINST IONIZING RADIATION USING SELECTIVE CYCLIN-DEPENDENT KINASE 4/6 INHIBITORS**
(71) The University of North Carolina At Chapel Hill, 308 Bynum Hall Campus Box 4105, Chapel Hill, NC 27599-4105, US
(72) SHARPLESS, Norman, E., 8323 Loch Laven Lane, Chapel Hill, NC 27516, US;
TORRICE, Chad, D., 245 Plaza Dr, UnitE, Chapel Hill, NC, US;
RAMSEY, Matthew, R., c/o The University Of North Carolina, At Chapel Hill, 308 Bynum Hall, Campus 4105, Chapel Hill, NC 27599-4105, US;
JOHNSON, Soren, c/o The University Of North Carolina, At Chapel Hill, 308 Bynum Hall, Campus 4105, Chapel Hill, NC 27599-4105, US;
BELL, Jessica, F., c/o The University Of North Carolina, At Chapel Hill, 308 Bynum Hall, Campus Box 4105, Chapel Hill, NC 27599-4105, US
(74) Behnisch, Werner, et al, Reinhard, Skuhra, Weise & Partner GbR, Patent- und Rechtsanwälte, Friedrichstrasse 31, 80801 München, DE

**(51) (8)** **EP 2343071**
***A 61K 31/485***
***A 61K 9/22***
***A 61K 9/32***
(30) US 25.08.2006. 840244 P
(96) EP 11156997.6 24.08.2007. En
(97) EP 2343071 13.07.2011. 201128 En
**(54) Pharmaceutical dosage forms**
(71) Purdue Pharma LP, One Stamford Forum, 201 Tresser Boulevard, Stamford, CT 06901, US
(72) Mannion, Richard Owen, 3860 Green Ridge Road, Furlong, PA 18925, US;
Huang, Haiyong Hugh, 33 Ketley Place, Princeton, NJ 08540, US;
McKenna, William Henry, 10 Longmeadow Road, Yonkers, NY 10704, US;

O'Donnell, Edward, P., 38 Chestnut Court, Basking Ridge, NJ 07920, US
(74) Maiwald Patentanwalts GmbH, Elisenhof, Elisenstrasse 3, 80335 München, DE

**(51) (8)** **EP 2139482 ***
***A 61K 31/496***
***A 61P 35/00***
(30) US 27.11.2006. 861120 P
US 28.02.2007. 904138 P
(86) PCT/EP2007010299 27.11.2007.
(96) EP 07846860.0 27.11.2007. En
(87) WO2008064866 05.06.2008. 200823
(97) EP 2139482 06.01.2010. 201001 En
**(54) TREATMENT FOR MULTIPLE MYELOMA**
(71) Ares Trading S.A., Zone Industrielle de l'Ouriettaz, 1170 Aubonne, CH
(72) JOURDAN, Michel, 123 rue de l'Oree du Bois, 34980 Saint-Gely-Fesc, FR;
DREANO, Michel, 169, chemin de Bottecreux, 74160 Collonges-sous-Salve, FR;
KLEIN, Bernard, 83, allée des Ecureuils, 34980 Saint Clément de Rivire, FR
(74) Merck Serono SA - Geneva, Intellectual Property, 9, chemin des Mines, 1202 Geneva, CH

**(51) (8)** **EP 2323663 ***
***A 61K 31/497***
(30) US 11.09.2008. 96191 P
(86) PCT/US2009056560 10.09.2009.
(96) EP 09813627.8 10.09.2009. En
(87) WO2010030815 18.03.2010. 201011
(97) EP 2323663 25.05.2011. 201121 En
**(54) 4-AMINO-3-(IMIDAZOLYL)-PYRAZOLO[3,4-D]PYRIMIDINES**
(71) ChemoCentryx, Inc., 850 Maude Avenue, Mountain View, California 94043, US
(72) ZHANG, Penglie, 1036 Jamaica Street, Foster City, California 94404, US;
ZENG, Yibin, 917 Aruba Lane, Foster City, California 94404, US
(74) Campbell, Patrick John Henry, et al, J.A. Kemp & Co., 14 South Square, Gray's Inn, London WC1R 5JJ, GB

**(51) (8)** **EP 2136808 ***
***A 61K 31/501***
***A 61P 31/10***
***A 01N 43/60***
(30) US 15.03.2007. 918182 P
(86) PCT/US2008003292 12.03.2008.
(96) EP 08726765.4 12.03.2008. En
(87) WO2008115385 25.09.2008. 200839
(97) EP 2136808 30.12.2009. 200953 En
**(54) PIPERAZINE-SUBSTITUTED PYRIDAZINONE DERIVATIVES USEFUL AS GLUCAN SYNTHASE INHIBITORS**
(71) Schering Corporation, 2000 Galloping Hill Road, Kenilworth, NJ 07033, US
(72) BLACK, Todd, A., 18 Laurel Drive, New Providence, New Jersey 07974, US;
MCNICHOLAS, Paul, M., 54 Tamaques Way, Westfield, New Jersey 07090, US;
WALKER, Scott, S., 18 Hampton Court, Basking Ridge, New Jersey 07920, US;
XU, Yiming, 86 Jackson Avenue, Princeton, New Jersey 08540, US;
TING, Pauline, C., 74 Delwick Lane, New Providence, New Jersey 07974, US
(74) Horgan, James Michael Frederic, et al, Merck & Co., Inc., European Patent Department, Hertford Road, Hoddesdon, EN11 9BU, GB

**(51) (8)** **EP 2107906 ***
***A 61K 31/519***
***A 61K 31/704***
***A 61K 31/7068***
***A 61K 45/06***
***A 61P 35/02***
(30) FR 28.12.2006. 0611492
(86) PCT/FR2007002171 27.12.2007.
(96) EP 07872446.5 27.12.2007. Fr
(87) WO2008102075 28.08.2008. 200835
(97) EP 2107906 14.10.2009. 200942 Fr
**(54) NOVEL THERAPEUTIC USE FOR TREATING LEUKAEMIA**
(71) Sanofi-Aventis, 174 Avenue de France, 75013 Paris, FR
(72) BOURRIE, Bernard, c/o Sanofi-Aventis, Département Brevets, 174, avenue de France, F-75013 Paris, FR;
CASELLAS, Pierre, c/o Sanofi-Aventis, Département Brevets, 174, avenue de France, F-75013 Paris, FR
(74) Senninger, Thierry, et al, Sanofi-Aventis, Département Brevets, 174, avenue de France, 75013 Paris, FR

**(51) (8)** **EP 2107907 ***
***A 61K 31/519***
***A 61P 37/00***
***A 61P 9/00***
***A 61K 31/403***
(30) US 20.12.2006. 875850 P
US 05.07.2007. 929623 P
(86) PCT/GB2007004863 18.12.2007.
(96) EP 07848600.8 18.12.2007. En
(87) WO2008075028 26.06.2008. 200826
(97) EP 2107907 14.10.2009. 200942 En
**(54) Combination of pemirolast and ramatroban for use in the treatment of inflammatory disorders**
(71) Cardoz AB, P O Box 2077, 103 12 Stockholm, SE
(72) RAUD, Johan, Cardoz AB, P.O. Box 2077, 10312 Stockholm, SE
(74) McNeeney, Stephen Phillip, et al, Potter Clarkson LLP, Park View House, 58 The Ropewalk, Nottingham, NG1 5DD, GB

**(51) (8)** **EP 2341911 ***
***A 61K 31/519***
***A 61K 31/407***
***A 61P 35/00***
(30) US 01.10.2008. 101841 P
(86) PCT/US2009059281 01.10.2009.
(96) EP 09818530.9 01.10.2009. En
(87) WO2010039997 08.04.2010. 201014
(97) EP 2341911 13.07.2011. 201128 En
**(54) HEMATOPOIETIC PROTECTION AGAINST CHEMOTHERAPEUTIC COMPOUNDS USING**

**SELECTIVE CYCLIN-DEPENDENT KINASE 4/6 INHIBITORS**
(71) The University of North Carolina At Chapel Hill, 308 Bynum Hall, Campus Box 4105, Chapel Hill, NC 27599-4105, US
(72) SHARPLESS, Norman, E., 8323 Loch Laven Lane, Chapel Hill, NC 27516, US;
STRUM, Jay, C., 616 Deerhaven Court, Hillsborough, NC 27278, US;
BISI, John, E., 103 Timberlea Court, Apex, NC 27502, US;
ROBERTS, Patrick, J., 2508 West Club Blvd., Durham, NC 27705, US;
RAMSEY, Matthew, R., C/o University Of North Carolina, At Chapel Hill, 308 Bynum Hall, Campus Box 4105, Chapel Hill, NC 27599-4105, US
(74) Sandmann, Wolfgang, et al, Reinhard, Skuhra, Weise & Partner GbR, Patent- und Rechtsanwälte, Friedrichstrasse 31, 80801 München, DE

---

**(51) (8)** **EP 2329824**
***A 61K 31/5375***
***A 61P 25/04***
***C 07D 265/30***
(30) JP 11.09.2008. 2008234069
(86) PCT/JP2009065791 10.09.2009.
(96) EP 09813104.8 10.09.2009. Ja
(87) WO2010029958 18.03.2010. 201011
(97) EP 2329824 08.06.2011. 201123 En
**(54) NOVEL PHARMACEUTICAL COMPOSITION FOR TREATMENT OF NOCICEPTIVE PAIN**
(71) Astellas Pharma Inc., 3-11, Nihonbashi-Honcho 2-chome, Chuo-ku, Tokyo 103-8411, JP
(72) TAKESHITA, Nobuaki, c/o Astellas Pharma Inc., 3-11 Nihonbashi-Honcho 2-chome, Chuo-ku, Tokyo 103-8411, JP;
NISHIGAKI, Fusako, c/o Astellas Pharma Inc., 3-11 Nihonbashi-Honcho 2-chome, Chuo-ku, Tokyo 103-8411, JP;
AOKI, Toshiaki, c/o Astellas Pharma Inc., 3-11 Nihonbashi-Honcho 2-chome, Chuo-ku, Tokyo 103-8411, JP;
TAMURA, Seiji, c/o Astellas Pharma Inc., 3-11 Nihonbashi-Honcho 2-chome, Chuo-ku, Tokyo 103-8411, JP;
KIKUCHI, Kazumi, c/o Astellas Pharma Inc., 3-11 Nihonbashi-Honcho 2-chome, Chuo-ku, Tokyo 103-8411, JP;
KURODA, Akio, c/o Astellas Pharma Inc., 3-11 Nihonbashi-Honcho 2-chome, Chuo-ku, Tokyo 103-8411, JP
(74) Albrecht, Thomas, Kraus & Weisert, Patent- und Rechtsanwälte, Thomas-Wimmer-Ring 15, 80539 München, DE

---

**(51) (8)** **EP 2334302 ***
***A 61K 31/5415***
***A 61K 9/50***
(30) US 09.09.2008. 95493 P
US 20.03.2009. 161992 P
(86) PCT/US2009056362 09.09.2009.
(96) EP 09792369.2 09.09.2009. En
(87) WO2010030667 18.03.2010. 201011
(97) EP 2334302 22.06.2011. 201125 En
**(54) DOSAGE FORMS FOR WEAKLY IONIZABLE COMPOUNDS**
(71) Cima Labs Inc., 7325 Aspen Lane, Brooklyn Park, Minnesota 55428, US
(72) AGARWAL, Vikas, 13305 56th Avenue North, Plymouth, Minnesota 55442, US;
NAZZAL, Sami M., 3111 Old Sterlington Road, Monroe, Louisiana 71203, US
(74) Hallybone, Huw George, Carpmaels & Ransford, One Southampton Row, London, WC1B 5HA, GB

---

**(51) (8)** **EP 2061474 ***
***A 61K 31/69***
***A 61K 31/505***
***A 61K 31/44***
***C 07F 5/02***
(30) US 30.08.2006. 841097 P
(86) PCT/US2007018629 23.08.2007.
(96) EP 07837254.7 23.08.2007. En
(87) WO2008027273 06.03.2008. 200810
(97) EP 2061474 27.05.2009. 200922 En
**(54) SOLID CITRATE AND TARTRATE SALTS OF DPP-IV INHIBITORS**
(71) Phenomix Corporation, 5871 Oberlin Drive, Suite 200, San Diego, CA 92121, US
(72) WU, Zhen-Ping, 1466 Torrey Pines Road, La Jolla, California 92037, US;
CAMPBELL, David, Alan, 13318 Seagrove Street, San Diego, California 92130, US;
CHERRINGTON, Julie, M., 1311 Caminito Faro, La Jolla, California 92037, US
(74) Leifert & Steffan, Patentanwälte, Burgplatz 21-22, 40213 Düsseldorf, DE

---

**(51) (8)** **EP 2334305 ***
***A 61K 31/765***
(30) US 26.09.2008. 100560 P
US 28.09.2008. 100738 P
(86) PCT/US2009058638 28.09.2009.
(96) EP 09817007.9 28.09.2009. En
(87) WO2010037044 01.04.2010. 201013
(97) EP 2334305 22.06.2011. 201125 En
**(54) BIOADHESIVE CONSTRUCTS**
(71) KNC NER Acquisition Sub, Inc., 108 Webster Building, 3411 Silverside Road, Wilmington, DE 19810, US
(72) LEE, Bruce P., 6135 Jeffers Drive, Madison, Wisconsin 53719, US;
DALSIN, Jeffrey L., 7001 East Pass, Unit D, Madison, Wisconsin 53719, US;
VOLLENWEIDER, Laura, 7022 Hubbard Avenue, 3, Middleton, Wisconsin 53562, US;
MURPHY, John L., 401 N. Eau Claire Street, Apt. 213, Madison, Wisconsin 53711, US;
XU, Fangmin, 1314 N. High Point Road, Middleton, Wisconsin 53562, US;
VIROSCO, Jeanne, 1709 Redwood Lane, Madison, Wisconsin 53711, US;
LEW, William, 726 Decorah Lane, Mendota Heights, Minnesota 55120, US;
WHITE, Jed, 503 S. Prospect, Madison, Wisconsin 53711, US
(74) Glawe, Delfs, Moll, Patent- und Rechtsanwälte, Rothenbaumchaussee 58, 20148 Hamburg, DE

---

**(51) (8)** **EP 2323672 ***
***A 61K 33/06***
***A 61K 33/12***
***A 61P 17/00***
(30) EP 28.07.2008. 08462004
(86) PCT/EP2009059727 28.07.2009.

(96) EP 09781176.4 28.07.2009. En
(87) WO2010012720 04.02.2010. 201005
(97) EP 2323672 25.05.2011. 201121 En
**(54) COMPOSITIONS FOR THE PROPHYLAXIS AND TREATMENT OF DERMATOLOGICAL/MUCOSAL DISEASES, AND USES THEREOF**
(71) Despharma Egészségügyi Szolgáltató Korlátolt, Felelősségü Társaság, Pagony u. 50., 1124 Budapest, HU
(72) FELEKI, Attila, Párkány utca 14. 7. em. 46., H-1138 Budapest, HU;
MIGO, Theodorus A. C., Halász utca 1. III. em. I., H-1011 Budapest, HU
(74) Kovari, Zoltan, Kovári & Partners, Patent and Trademark Attorneys LLC, Naphegy u. 32, 1016 Budapest, HU

**(51) (8)** **EP 2340026 ***
***A 61K 35/14***
***A 61P 3/10***
***A 61P 25/02***
(30) EP 29.09.2008. 08165446
EP 20.05.2009. 09160858
(86) PCT/DK2009050251 29.09.2009.
(96) EP 09815639.1 29.09.2009. En
(87) WO2010034315 01.04.2010. 201013
(97) EP 2340026 06.07.2011. 201127 En
**(54) A DEPROTEINISED CALF BLOOD PREPARATION FOR USE IN PREVENTION OR TREATMENT OF DIABETIC PERIPHERAL POLYNEUROPATHY**
(71) Nycomed Austria GmbH, St. Peterstrasse 25, 4020 Linz, AT
(72) MOVSESYAN, LUSINE, co/Nycomed Danmark ApS, Langebjerg 1, DK-4000 Roskilde, DK
(74) Plougmann & Vingtoft A/S, Sundkrogsgade 9, P.O. Box 831, DK-2100 CopenhagenØ, DK

**(51) (8)** **EP 2334313 ***
***A 61K 36/534***
***A 61K 36/38***
***A 61P 29/00***
***A 61P 17/00***
(30) US 29.08.2008. 93126 P
(86) PCT/US2009055456 28.08.2009.
(96) EP 09810701.4 28.08.2009. En
(87) WO2010025430 04.03.2010. 201009
(97) EP 2334313 22.06.2011. 201125 En
**(54) HOMEOPATHIC THERAPEUTIC METHOD**
(71) Polich, Nancy Josephine, 24 W 570 Eugenia, Naperville, Illinois 60540, US
(72) Polich, Nancy Josephine, 24 W 570 Eugenia, Naperville, Illinois 60540, US
(74) Modiano, Micaela Nadia, et al, Modiano & Partners, Thierschstrasse 11, 80538 München, DE

**(51) (8)** **EP 2323678 ***
***A 61K 38/00***
(30) US 07.08.2008. 188188 P
US 02.12.2008. 200618 P
(86) PCT/US2009004550 07.08.2009.
(96) EP 09805291.3 07.08.2009. En
(87) WO2010016938 11.02.2010. 201006
(97) EP 2323678 25.05.2011. 201121 En
**(54) GLUCOSE-DEPENDENT INSULINOTROPIC POLYPEPTIDE ANALOGUES**
(71) IPSEN PHARMA S.A.S., 65, quai Georges Gorse, 91200 Boulogne-Billancourt, FR
(72) DONG, Zheng, Xin, 66 Fairview Street, Holliston, MA 01746, US
(74) Wells, Andrew, Harrison Goddard Foote, 4th Floor, Merchant Exchange, 17-19 Whitworth Street West, Manchester M1 5WG, GB

**(51) (8)** **EP 2328601 ***
***A 61K 38/00***
***A 61K 9/50***
***A 61K 9/16***
***A 61K 9/20***
***A 61K 9/48***
(30) US 15.08.2008. 89422 P
US 03.08.2009. 273332 P
US 06.08.2009. 231725 P
(86) PCT/US2009004675 14.08.2009.
(96) EP 09789142.8 14.08.2009. En
(87) WO2010019266 18.02.2010. 201007
(97) EP 2328601 08.06.2011. 201123 En
**(54) LINACLOTIDE-CONTAINING FORMULATIONS FOR ORAL ADMINISTRATION**
(71) Ironwood Pharmaceuticals, Inc., 301 Binney Street, Cambridge, MA 02142, US;
Forest Laboratories Holdings Limited, 18 Parliament Street, Milner House, Hamilton, Bermuda HM12, BM
(72) FRETZEN, Angelika, 7 AVON Street, Somerville, MA 02143, US;
WITOWSKI, Steven, 171 Laurel Street, Melrose, MA 02176, US;
GROSSI, Alfredo, 102 Ten Hills Road, Somerville, MA 02145, US;
ZHAO, Hong, 74 Cragie Street Apt. 31, Somerville, MA 02143, US;
DEDHIYA, Mahendra, 1 Lea Court, Pomona, NY 10970-3219, US;
MO, Yun, 60 Fairfield Way Apt. 1, Commack, NY 11725, US
(74) Simpson, Tobias Rutger, et al, Mathys & Squire LLP, 120 Holborn, London EC1N 2SQ, GB

**(51) (8)** **EP 2334316 ***
***A 61K 38/00***
(30) US 22.09.2008. 192939 P
(86) PCT/US2009005265 22.09.2009.
(96) EP 09814916.4 22.09.2009. En
(87) WO2010033254 25.03.2010. 201012
(97) EP 2334316 22.06.2011. 201125 En
**(54) PROCESS FOR THE SYNTHESIS OF (AIB8,35)HGLP-1(7-36)-NH2**
(71) Ipsen Manufacturing Ireland Limited, Blanchardstown Industrial Park, Blanchardstown, Dublin 15, IE
(72) DONG, Zheng, Xin, 66 Fairview Street, Holliston, MA 01746, US;
LOUGHMAN, Thomas, Ciaran, 45 Furry Park Road, Killester, Dublin 5, IE;
HURLEY, Fionn, 6 Turnberry Square, Baldoyle, Dublin 13, IE;
JOHNSON, Steven, R., 25 New York Avenue, Monmouth Junction, NJ 08852, US

(74) Wells, Andrew, Harrison Goddard Foote, 4th Floor, Merchant Exchange, 17-19 Whitworth Street West, Manchester M1 5WG, GB

**(51) (8)** **EP 2323687 ***
***A 61K 38/18***
***G 01N 33/68***
***A 61P 25/28***
(30) DK 11.09.2008. 200801273
US 11.09.2008. 96218 P
US 08.06.2009. 185159 P
(86) PCT/DK2009050233 10.09.2009.
(96) EP 09776281.9 10.09.2009. En
(87) WO2010028651 18.03.2010. 201011
(97) EP 2323687 25.05.2011. 201121 En
**(54) METHOD OF UPREGULATING SORLA FOR THE TREATMENT OF ALZHEIMER'S DISEASE**
(71) H. Lundbeck A/S, Ottiliavej 9, 2500 Valby, DK
(72) WILLNOW, Thomas, Bieselheider Weg 9, D-13465 Berlin, DE
(74) Conrad, Lars Sparre, et al, H. Lundbeck A/S, Ottiliavej 9, 2500 Valby, DK

**(51) (8)** **EP 2334319 ***
***A 61K 38/18***
(30) US 25.08.2008. 190152 P
(86) PCT/US2009054975 26.08.2009.
(96) EP 09812035.5 26.08.2009. En
(87) WO2010027831 11.03.2010. 201010
(97) EP 2334319 22.06.2011. 201125 En
**(54) METHOD FOR REDUCING SCARRING DURING WOUND HEALING USING ANTISENSE COMPOUNDS DIRECTED TO CTGF**
(71) Excaliard Pharmaceuticals, Inc., 2141 Palomar Airport Rd., Suite 300, Carlsbad, CA 92011, US;
Northwestern University, 633 Clark Street, Evanston, IL 60208, US;
Isis Pharmaceuticals, Inc., 1896 Rutherford Road, Carlsbad, CA 92008, US
(72) DEAN, Nicolas, M., 2110 Whisper Wind Ln, Encinitas, CA 92024, US;
MUSTOE, Thomas, A., 114 Greenwood St, Evanston, IL 60201, US;
SISCO, Mark, 232 E. 68th St, New York, NY 10022, US;
KRYGER, Zol, 30448 Passageway Place, Agoura HIlls, CA 91301, US;
BENNET, Frank, C., 1347 Cassins St, Carlsbad, CA 92009, US
(74) Almond-Martin, Carol, et al, Ernest Gutmann - Yves Plasseraud S.A.S., 88, Boulevard des Belges, 69452 Lyon Cedex 06, FR

**(51) (8)** **EP 2059253 ***
***A 61K 38/20***
(30) US 14.09.2006. 844521 P
(86) PCT/US2007019995 14.09.2007.
(96) EP 07838231.4 14.09.2007. En
(87) WO2008033499 20.03.2008. 200812
(97) EP 2059253 20.05.2009. 200921 En
**(54) MODULATION OF REGULATORY T CELLS BY HUMAN IL-18**
(71) The Trustees Of The University Of Pennsylvania, Center for Technology Transfer, 3160 Chestnut Street Suite 200, Philadelphia, PA 19104-6283, US
(72) CARROLL, Richard G., 54 Bryn Mawr Avenue, Lansdowne, PA 19050, US;
SHAN, Xiaochuan, 1023 Red Oak Drive, Cherry Hill, NJ 08003, US;
DANET-DESNOYERS, Gwenn-Ael, 632 S. Bambrey Street, Philadelphia, PA 19146, US;
JUNE, Carl H., 409 Baird Road, Merion Station, PA 19066, US
(74) Grünecker, Kinkeldey, Stockmair & Schwanhäusser, Anwaltssozietät, Leopoldstrasse 4, 80802 München, DE

**(51) (8)** **EP 2337580 ***
***A 61K 38/37***
(30) US 03.09.2008. 136402 P
EP 03.09.2008. 08163554
(86) PCT/EP2009061402 03.09.2009.
(96) EP 09782562.4 03.09.2009. En
(87) WO2010026186 11.03.2010. 201010
(97) EP 2337580 29.06.2011. 201126 En
**(54) NEW PROTECTING COMPOSITIONS FOR RECOMBINANTLY PRODUCED FACTOR VIII**
(71) Octapharma AG, Seidenstrasse 2, 8853 Lachen, CH
(72) RIPPNER, Brita, Rödklövervägen 54, S-16573 Hässelby, SE;
ÖSTERBERG, Josefin, Kopparvägen 59, S-17672 Järfälla, SE;
NILSSON, Ulrika, Kiellandsplan 39, S-16843 Bromma, SE;
IVARSSON, Elsa, Andersvägen 3b, S-16969 Solna, SE;
AGERKVIST, Irne, Ridvägen 31, S-18239 Danderyd, SE
(74) Meyers, Hans-Wilhelm, von Kreisler Selting Werner, Patentanwälte, Bahnhofsvorplatz 1, D-50667 Köln, DE

**(51) (8)** **EP 2076279 ***
***A 61K 38/39***
***C 07K 14/78***
***A 61K 35/12***
***C 12N 5/06***
***A 61P 17/02***
(30) US 06.10.2006. 850131 P
(86) PCT/US2007021677 09.10.2007.
(96) EP 07867216.9 09.10.2007. En
(87) WO2008057162 15.05.2008. 200820
(97) EP 2076279 08.07.2009. 200928 En
**(54) NATIVE (TELOPEPTIDE) PLACENTAL COLLAGEN COMPOSITIONS**
(71) Anthrogenesis Corporation, 7 Powder Horn Drive, Warren NJ 07059, US
(72) BHATIA, Mohit, 61 Pine Oak Drive, North Brunswick, NJ 08902, US;
LUGO, Chris, 25 Lathrop Avenue, Madison, NJ 07940, US;
YE, Qian, 10 Mount Haven Drive, Livingston, NJ 07039, US;
EDINGER, James W., 273 Leonardville Road, Belford, NJ 07718, US
(74) Weber, Martin, Jones Day, Rechtsanwälte Attorneys-at-Law Patentanwälte, Prinzregentenstrasse 11, 80538 München, DE

**(51) (8)** **EP 2251029**
***A 61K 38/40***
***A 23L 1/29***
***A 23L 1/305***
***A 23J 1/20***
***A 23C 9/152***
***A 23C 19/05***
***A 23C 23/00***
***A 61P 1/00***
(96) EP 09159964.7 12.05.2009. En
(97) EP 2251029 17.11.2010. 201046 En
**(54) Lactoferrin and gut neuronal health in adults and/or elderly**
(71) Nestec S.A., Avenue Nestlé 55, 1800 Vevey, CH
(72) Faure, Magali, Chemin des Crocus 2, 1074 Mollie-Margot, CH;
Wang, Bing, Route de Berne 224, 1066 Epalinges, CH;
Schmitt, Jeroen Antonius Johannes, Chemin du Général Voruz 13, 1510 Moudon, CH
(74) Marquardt, Ulf, Nestec S.A., Avenue Nestlé 55, 1800 Vevey, CH

**(51) (8)** **EP 2251030**
***A 61K 38/40***
***A 23L 1/29***
***A 23L 1/305***
***A 23J 1/20***
***A 23C 19/05***
***A 23C 9/152***
***A 23C 23/00***
***A 61P 25/28***
(96) EP 09159966.2 12.05.2009. En
(97) EP 2251030 17.11.2010. 201046 En
**(54) Lactoferrin and brain health and development in infants**
(71) Nestec S.A., Avenue Nestlé 55, 1800 Vevey, CH
(72) Wang, Bing, Route de Berne 224, 1066 Epalinges, CH;
Faure, Magali, Chemin des Crocus 2, 1074 Mollie-Margot, CH;
Schmitt, Jeroen Antonius Johannes, Chemin du Général Voruz 13, 1510 Moudon, CH
(74) Marquardt, Ulf, Nestec S.A., Avenue Nestlé 55, 1800 Vevey, CH

**(51) (8)** **EP 2251034**
***A 61K 39/00***
***A 61K 39/15***
***A 61K 39/17***
***A 61K 39/145***
(30) US 02.12.2005. 741833 P
US 22.05.2006. 802864 P
(96) EP 10173295.6 01.12.2006. En
(97) EP 2251034 17.11.2010. 201046 En
**(54) Chimeric Newcastle Disease viruses presenting non-native surface proteins and uses thereof**
(71) Mount Sinai School of Medicine, One Gustave Levy Place, New York, NY 10029-6574, US
(72) Palese, Peter, 414 Highwood Avenue, Leonia, NJ 07605, US;
Garcia-Sastre, Adolfo, 16 East 96th Street Apt.3G, New York, NY 10128, US
(74) Weber, Martin, Jones Day, Rechtsanwälte Attorneys-at-Law Patentanwälte, Prinzregentenstrasse 11, 80538 München, DE

**(51) (8)** **EP 2326345 ***
***A 61K 39/00***
(30) US 22.08.2008. 189930 P
(86) PCT/US2009004765 21.08.2009.
(96) EP 09808518.6 21.08.2009. En
(87) WO2010021729 25.02.2010. 201008
(97) EP 2326345 01.06.2011. 201122 En
**(54) HUMAN NOTCH3 BASED FUSION PROTEINS AS DECOY INHIBITORS OF NOTCH3 SIGNALING**
(71) The Trustees of Columbia University in the City of, New York, West 116th Street and Broadway, New York, NY 10027, US
(72) KITAJEWSKI, Jan, 323 Hillcrest Road, Ridgewood, NJ 07450, US;
SHAWBER, Carrie, 418 Beech Street, Washington Township, NJ 07676, US
(74) Vossius & Partner, Siebertstrasse 4, 81675 München, DE

**(51) (8)** **EP 2331118 ***
***A 61K 39/00***
***A 61P 35/00***
***A 61K 38/08***
***A 61K 38/16***
(30) EP 01.10.2008. 08017305
US 16.10.2008. 105970 P
(86) PCT/EP2009006979 28.09.2009.
(96) EP 09778749.3 28.09.2009. En
(87) WO2010037513 08.04.2010. 201014
(97) EP 2331118 15.06.2011. 201124 En
**(54) COMPOSITION OF TUMOR-ASSOCIATED PEPTIDES AND RELATED ANTI-CANCER VACCINE FOR THE TREATMENT OF GLIOBLASTOMA (GBM) AND OTHER CANCERS**
(71) Immatics Biotechnologies GmbH, Paul-Ehrlich-Strasse 15, 72076 Tübingen, DE
(72) SCHOOR, Oliver, Charlottenstrasse 21, 72070 Tübingen, DE;
HILF, Norbert, Im Wengertacker 17, 72138 Kirchentellinsfurt, DE;
WEINSCHENK, Toni, Im Morgenrain 15, 73773 Aichwald, DE;
TRAUTWEIN, Claudia, Nelkenweg 2, 42489 Wülfrath, DE;
WALTER, Steffen, Steinenbergstrasse 2, 72764 Reutlingen, DE;
SINGH, Harpreet, Bei den Pferdeställen 9, 72072 Tübingen, DE
(74) Krauss, Jan, Forrester & Boehmert, Pettenkoferstrasse 20-22, 80336 München, DE

**(51) (8)** **EP 2334326 ***
***A 61K 39/00***
***C 07K 7/06***
***A 61K 38/08***
***A 61P 25/00***
(30) AT 22.02.2008. 2972008
(86) PCT/AT2009000071 23.02.2009.
(96) EP 09712380.6 23.02.2009. En
(87) WO2009103105 27.08.2009. 200935
(97) EP 2334326 22.06.2011. 201125 En

**(54) MIMOTOPES OF ALPHA-SYNUCLEIN AND VACCINES THEREOF FOR THE TREATMENT OF NEURODEGENERATIVE DISORDERS**
(71) Affiris AG, Karl-Farkas-Gasse 22, 1030 Wien, AT
(72) MANDLER, Markus, Dieselgasse 5/115, A-1100 Vienna, AT;
WENINGER, Harald, Hamiltongasse 8/3/20, A-1140 Vienna, AT;
SANTIC, Radmila, Antonigasse 78/15, A-1180 Vienna, AT;
KOPINITS, Edith, Tschadekgasse 12, A-2486 Landegg, AT
(74) Sonn & Partner Patentanwälte, Riemergasse 14, 1010 Wien, AT

---

**(51) (8)** **EP 2341927 ***
***A 61K 39/00***
***A 61P 35/00***
***A 61K 38/08***
***A 61K 38/16***
(30) EP 01.10.2008. 08017305
EP 13.10.2008. 08017921
US 16.10.2008. 105928 P
(86) PCT/EP2009006980 28.09.2009.
(96) EP 09778750.1 28.09.2009. En
(87) WO2010037514 08.04.2010. 201014
(97) EP 2341927 13.07.2011. 201128 En
**(54) NOVEL IMMUNOTHERAPY AGAINST SEVERAL TUMORS INCLUDING NEURONAL AND BRAIN TUMORS**
(71) Immatics Biotechnologies GmbH, Paul-Ehrlich-Strasse 15, 72076 Tübingen, DE
(72) SCHOOR, Oliver, Charlottenstrasse 21, 72070 Tübingen, DE;
HILF, Norbert, Im Wengertacker 17, 72138 Kirchentellinsfurt, DE;
WEINSCHENK, Toni, Im Morgenrain 15, 73773 Aichwald, DE;
TRAUTWEIN, Claudia, Nelkenweg 2, 42489 Wülfrath, DE;
WALTER, Steffen, Steinenbergstrasse 2, 72764 Reutlingen, DE;
SINGH, Harpreet, Bei den Pferdeställen 9, 72072 Tübingen, DE
(74) Krauss, Jan, Forrester & Boehmert, Pettenkoferstrasse 20-22, 80336 München, DE

---

**(51) (8)** **EP 2331121 ***
***A 61K 39/095***
***C 07K 14/22***
(30) GB 08.09.2008. 0816447
(86) PCT/EP2009052689 06.03.2009.
(96) EP 09779121.4 06.03.2009. En
(87) WO2010025964 11.03.2010. 201010
(97) EP 2331121 15.06.2011. 201124 En
**(54) VACCINE COMPRISING PROTEIN NMBO964 FROM MEISSERIA MENINGITIDIS**
(71) GlaxoSmithKline Biologicals S.A., rue de l'Institut, 89, 1330 Rixensart, BE;
University of Utrecht, Department of Molecular & Cell Biology, and Institute of Biomembranes, Utrecht University, Padulaan 8, 3548 CH Utrecht, NL
(72) BOS, Martine Petronella, Utrecht University, Padualaan 8, NL-3584 CH Utrecht, NL;
POOLMAN, Jan, GlaxoSmithKline Biologicals s.a., rue de l'Institut 89, B-1330 Rixensart, BE;
STORK, Michiel, Utrecht University, Padualaan 8, NL-3584 CH Utrecht, NL;
TOMMASSEN, Johannes Petrus Maria, Utrecht University, Padualaan 8, NL-3584 CH Utrecht, NL;
WEYNANTS, Vincent, GlaxoSmithKline Biologicals s.a., rue de l'Institut 89, B-1330 Rixensart, BE
(74) Whitaker, Duncan, et al, GlaxoSmithKline, Global Patents (CN925.1), 980 Great West Road, Brentford, Middlesex TW8 9GS, GB

---

**(51) (8)** **EP 2328613 ***
***A 61K 39/385***
(30) US 28.08.2008. 92582 P
US 15.10.2008. 95747 P
US 01.04.2009. 165688 P
(86) PCT/EP2009060967 26.08.2009.
(96) EP 09782191.2 26.08.2009. En
(87) WO2010023216 04.03.2010. 201009
(97) EP 2328613 08.06.2011. 201123 En
**(54) VACCINE**
(71) GlaxoSmithKline Biologicals S.A., rue de l'Institut, 89, 1330 Rixensart, BE
(72) BIEMANS, Ralph Leon, GlaxoSmithKline Biologicals s.a., rue de l'Institut 89, B-1330 Rixensart, BE;
ELOUAHABI, Abdelatif, GlaxoSmithKline Biologicals s.a., rue de l'Institut 89, B-1330 Rixensart, BE
(74) Robertson, James Stuart, GlaxoSmithKline, Global Patents CN925.1, 980 Great West Road, Brenford Middlesex TW8 9GS, GB

---

**(51) (8)** **EP 2331126 ***
***A 61K 39/39***
(30) AU 19.08.2008. 2008904261
US 27.08.2008. 92091 P
(86) PCT/US2009054285 19.08.2009.
(96) EP 09791663.9 19.08.2009. En
(87) WO2010022135 25.02.2010. 201008
(97) EP 2331126 15.06.2011. 201124 En
**(54) IMMUNOLOGICAL COMPOSITION**
(71) Wyeth LLC, Five Giralda Farms, Madison, NJ 07940, US
(72) LEHRBACH, Philip, Ralph, 5 Fiona Avenue, Wahroonga, New South Wales 2076, AU;
CHESHIRE, William, John, 19 Glenbrook Road, Glenbrook, New South Wales 2773, AU;
XIN, Zhixian, 25 Seabrook Crescent, Doonside, New South Wales 2767, AU
(74) England, Peter Michael, Pfizer Limited, European Patent Department, Ramsgate Road, Sandwich, Kent CT13 9NJ, GB

---

**(51) (8)** **EP 2104513 ***
***A 61K 39/395***
***C 07K 16/46***
***C 07K 16/28***
***A 61P 35/00***
(30) US 27.11.2006. 861657 P
(86) PCT/US2007085585 27.11.2007.
(96) EP 07868854.6 27.11.2007. En
(87) WO2008067283 05.06.2008. 200823
(97) EP 2104513 30.09.2009. 200940 En
**(54) OVR110 ANTIBODY COMPOSITIONS AND METHODS OF USE**
(71) Diadexus, Inc., 343 Oyster Point Boulevard, South San Francisco, CA 94080, US

(72) PAPKOFF, Jackie, 4373 21st Street, San Francisco, CA 94114, US;
DIEDRICH, Gundo, 832 Grand Avenue, South San Francisco, CA 94080, US;
LIU, Shu-Hui, 441 Cork Harbour Circle, H, Redwood City, CA 94065, US;
NOWAKOWSKI, Agnes, 1500 Eastside Drive, 107, Austin, TX 78704, US
(74) Dörries, Hans Ulrich, et al, df-mp, Fünf Höfe, Theatinerstrasse 16, 80333 München, DE

**(51) (8)** **EP 2238986**
***A 61K 39/395***
***A 61P 25/00***
***C 07K 16/18***
***C 07K 16/28***
(30) US 08.07.2005. 697336 P
US 10.02.2006. 771900 P
US 19.06.2006. 814522 P
(96) EP 10169452.9 07.07.2006. En
(97) EP 2238986 13.10.2010. 201041 En
**(54) Sp35 antibodies and uses thereof**
(71) Biogen Idec MA Inc., 14 Cambridge Center, Cambridge, Massachusetts 02142, US
(72) Mi, Sha, 4 Vernon Road, Belmont, MA 02478, US;
Pepinski, R. Blake, 30 Falmouth Road, Arlington, MA 02474, US;
Shao, Zhaohui, 126 Babcock Street 38, Brookline, MA 02466, US;
Graff, Christilyn P., 632 Massachusetts Avenue, Apt. 614, Cambridge, MA 02139, US
(74) Adams, Harvey Vaughan John, Mathys & Squire LLP, 120 Holborn, London, EC1N 2SQ, GB

**(51) (8)** **EP 2328615 ***
***A 61K 39/395***
(30) US 20.08.2008. 90472 P
US 16.09.2008. 97232 P
(86) PCT/US2009053425 11.08.2009.
(96) EP 09808611.9 11.08.2009. En
(87) WO2010021874 25.02.2010. 201008
(97) EP 2328615 08.06.2011. 201123 En
**(54) ENGINEERED ANTI-IL-13 ANTIBODIES, COMPOSITIONS, METHODS AND USES**
(71) Centocor Ortho Biotech Inc., 800/850 Ridgeview Drive, Horsham, PA 19044, US
(72) SWANSON, Ronald, V., 3210 Merryfield Row, San Diego, CA 92121, US;
CHI, Ellen, 3210 Merryfield Row, San Diego, CA 92121, US;
RAGHUNATHAN, Gopalan, 3210 Merryfield Row, San Diego, CA 92121, US;
ZHAO, Shanrong, 3210 Merryfield Row, San Diego, CA 92121, US;
FRANSSON, Johan, 3210 Merryfield Row, San Diego, CA 92121, US;
CORDIER, Wendy, 3210 Merryfield Row, San Diego, CA 92121, US;
ALMAGRO, Juan, C., 145 King of Prussia Road, Radnor, PA 19087, US;
HYUN, Linus, 145 King of Prussia Road, Radnor, PA 19087, US;
GILES-KOMAR, Jill, 145 King of Prussia Road, Radnor, PA 19087, US;
O'NEIL, Karyn, T., 145 King of Prussia Road, Radnor, PA 19087, US;
CARTON, Jill, M., 145 King of Prussia Road, Radnor, PA 19087, US;
ZHOU, Hong, Mimi, 3210 Merryfield Row, Dan Diego, CA 92121, US;
TEPLYAKOV, Alexey, V., 145 King of Prussia Road, Radnor, PA 19087, US;
FENG, Yiqing, 13 Donna Lane, Wayne, Pennsylvania, US
(74) Goodfellow, Hugh Robin, Carpmaels & Ransford, One Southampton Row, London, WC1B 5HA, GB

**(51) (8)** **EP 2328616 ***
***A 61K 39/395***
***C 07K 16/18***
(30) US 05.08.2008. 86355 P
(86) PCT/EP2009060052 03.08.2009.
(96) EP 09737379.9 03.08.2009. En
(87) WO2010015608 11.02.2010. 201006
(97) EP 2328616 08.06.2011. 201123 En
**(54) COMPOSITIONS AND METHODS FOR ANTIBODIES TARGETING COMPLEMENT PROTEIN C5**
(71) Novartis AG, Lichtstrasse 35, 4056 Basel, CH
(72) DIEFENBACH-STREIBER, Beate, Reiherweg 6, 86949 Windach, DE;
EBERTH, Adina, Friedrich-List Strasse 114, 81377 München, DE;
GUILD, Braydon Charles, 109 Riverdale Road, Concord, Massachusetts 01742, US;
KIM, Yong-In, Novartis Institutes for BioMedical Research Inc., 500 Technology Square, Cambridge, Massachusetts 02139, US;
ROGUSKA, Michael, Novartis Institutes for BioMedical Research Inc., 500 Technology Square, Cambridge, Massachusetts 02139, US;
SPLAWSKI, Igor, Novartis Institutes for BioMedical Research Inc., 500 Technology Square, Cambridge, Massachusetts 02139, US
(74) Vögeli-Lange, Regina, Novartis Pharma AG, Patent Department, CH-4002 Basel, CH

**(51) (8)** **EP 2331136 ***
***A 61K 39/395***
(30) US 26.09.2008. 100639 P
US 12.01.2009. 144058 P
US 08.05.2009. 176741 P
US 13.01.2009. 144284 P
(86) PCT/US2009058635 28.09.2009.
(96) EP 09817004.6 28.09.2009. En
(87) WO2010037041 01.04.2010. 201013
(97) EP 2331136 15.06.2011. 201124 En
**(54) FRIZZLED-BINDING AGENTS AND USES THEREOF**
(71) OncoMed Pharmaceuticals, Inc., 800 Chesapeake Drive, Redwood City, CA 94063, US
(72) GURNEY, Austin, L., 946 Diamond Street, San Francisco, CA 94114, US;
SATO, Aaron, Ken, 1636 Albemarle Way, Burlingame, CA 94010, US;
AXELROD, Fumiko, Takada, 3780 Wright Place, Palo Alto, CA 94306, US;

HOEY, Timothy, Charles, 200 Darrell Road, Hillsborough, CA 94010, US;
SATYAL, Sanjeev, H., 965 Buckland Avenue, San Carlos, CA 94070, US;
MITRA, Satyajit, Sujit Kumar, 75 Duane Street, Apartment 17, Redwood City, CA 94062, US
(74) King, Hilary Mary, et al, Mewburn Ellis LLP, 33 Gutter Lane, London, EC2V 8AS, GB

**(51) (8)** **EP 2341933** *
***A 61K 39/395***
***C 07K 16/46***
(30) US 24.10.2008. 108210 P
US 09.07.2009. 224226 P
US 30.07.2009. 229933 P
(86) PCT/US2009061867 23.10.2009.
(96) EP 09822779.6 23.10.2009. En
(87) WO2010048520 29.04.2010. 201017
(97) EP 2341933 13.07.2011. 201128 En
**(54) LIPIDATED IMIDAZOQUINOLINE DERIVATIVES**
(71) GlaxoSmithKline Biologicals SA, Rue de l'Institut 89, 1330 Rixensart, BE
(72) JOHNSON, David, GlaxoSmithKline Biologicals S.A. Hamilton, Old Corvallis Road 553-MT, Hamilton, Montana 59840, US
(74) Robertson, James Stuart, et al, GlaxoSmithKline, Global Patents CN925.1, 980 Great West Road, Brentford, Middlesex TW8 9GS, GB

**(51) (8)** **EP 2341934** *
***A 61K 39/395***
***A 61P 17/00***
***A 61P 19/02***
***A 61P 37/00***
(30) US 30.09.2008. 101606 P
(86) PCT/US2009058891 29.09.2009.
(96) EP 09818386.6 29.09.2009. En
(87) WO2010039742 08.04.2010. 201014
(97) EP 2341934 13.07.2011. 201128 En
**(54) METHODS TO REDUCE B-HELPER T CELLS TO TREAT AUTOIMMUNE DISEASES**
(71) Baylor Research Institute, 3310 Live Oak Street, Suite 501, Dallas, TX 75204, US
(72) UENO, Hideki, 4020 Lantana Lane, Plano, TX 75093, US;
BANCHEREAU, Jacques, F., 6730 Northaven Road, Dallas, TX 75230, US;
PASCUAL, Maria, Virginia, 3225 Turtle Creek Blvd, Apt 447, Dallas, TX 75219, US;
SCHMITT, Nathalie, 8610 Southwestern Blvd. 1113, Dallas, TX 75206, US
(74) Sonn & Partner Patentanwälte, Riemergasse 14, 1010 Wien, AT

**(51) (8)** **EP 2324853**
***A 61K 45/06***
(96) EP 09175876.3 13.11.2009. En
(97) EP 2324853 25.05.2011. 201121 En
**(54) Lixisenatide as add-on to metformin in the treatment of diabetes type 2**
(71) Sanofi-Aventis Deutschland GmbH, Brüningstraße 50, 65929 Frankfurt am Main, DE
(72) Silvestre, Louise, c/o Sanofi-Aventis, Département Brevets, 174, Avenue de France, 75013 Paris, FR;
Sert-Langeron, Caroline, c/o Sanofi-Aventis, Département Brevets, 174, Avenue de France, 75013 Paris, FR;
Zhou, Tianyue, Sanofi-Aventis, 1041 Route 202-206, Mail Code: BWD-303A, Bridgewater, NJ 08807, US
(74) Weiss, Wolfgang, et al, Weickmann & Weickmann, Patentanwälte, Richard-Strauss-Strasse 80, 81679 München, DE

**(51) (8)** **EP 2329848**
***A 61K 45/06***
(96) EP 09175877.1 13.11.2009. En
(97) EP 2329848 08.06.2011. 201123 En
**(54) Lixisenatide as add-on therapy to insulin glargine and metformin for treating type 2 diabetes**
(71) Sanofi-Aventis Deutschland GmbH, Brüningstraße 50, 65929 Frankfurt am Main, DE
(72) Silvestre, Louise, c/o Sanofi-Aventis, Département Brevets, 174, Avenue de France, 75013 Paris, FR;
Souhami, Elisabeth, c/o Sanofi-Aventis, Département Brevets, 174, Avenue de France, 75013 Paris, FR;
Wei, Xiaodan, c/o Sanofi-Aventis, 1041 Route 202-206, Mail Code: BWD-303A, Bridgewater, NJ 08807, US
(74) Weiss, Wolfgang, et al, Weickmann & Weickmann, Patentanwälte, Richard-Strauss-Strasse 80, 81679 München, DE

**(51) (8)** **EP 2331137** *
***A 61K 45/06***
***A 61K 31/517***
***A 61K 31/472***
***A 61P 13/08***
***A 61P 13/10***
(30) EP 19.08.2008. 08290786
(86) PCT/IB2009006818 17.08.2009.
(96) EP 09786240.3 17.08.2009. En
(87) WO2010020882 25.02.2010. 201008
(97) EP 2331137 15.06.2011. 201124 En
**(54) NEW COMBINATION OF ACTIVE INGREDIENTS CONTAINING AN ALPHA-1ANTAGONIST AND A PDE 4 INHIBITOR**
(71) Sanofi-Aventis, 174 Avenue de France, 75013 Paris, FR
(72) LLUEL, Philippe, 55 Rue Jean Bouin, F-31520 Ramonville Saint Agne, FR;
PALEA, Stefano, 8 Avenue du Petit Prince, Bat Sequoia, F-31400 Toulouse, FR;
SOFEIR, Maurice, c/o Sanofi-Aventis, Département Brevets, 174 avenue de France, F-75013 Paris, FR
(74) Tinel, Marie-Line, et al, Sanofi-Aventis, Département Brevets, 174, avenue de France, 75013 Paris, FR

**(51) (8)** **EP 2337583** *
***A 61K 45/06***
(30) US 17.09.2008. 97753 P
US 28.10.2008. 109033 P
US 23.04.2009. 171935 P
(86) PCT/US2009056771 14.09.2009.
(96) EP 09792492.2 14.09.2009. En
(87) WO2010033443 25.03.2010. 201012
(97) EP 2337583 29.06.2011. 201126 En
**(54) COMBINATION OF HCV NS3 PROTEASE INHIBITOR WITH INTERFERON AND RIBAVIRIN**

(71) Boehringer Ingelheim International GmbH, Binger Strasse 173, 55216 Ingelheim, DE
(72) HUANG, David, Boehringer Ingelheim Pharmaceuticals Inc., 900 Ridgebury Road, P.O. Box 368, Ridgefield, Connecticut 06877-0368, US;
STEINMANN, Gerhard Gustav, Boehringer Ingelheim GmbH, CD Patent, Binger Strasse, D-55216 Ingelheim am Rhein, DE;
STERN, Jerry O., Boehringer Ingelheim Pharmaceuticals Inc., 900 Ridgebury Road, P.O. Box 368, Ridgefield, Connecticut 06877-0368, US
(74) Zwickl, Markus, Boehringer Ingelheim GmbH, CD Patents, Binger Strasse 173, 55216 Ingelheim am Rhein, DE

**(51) (8)** **EP 2340042 ***
***A 61K 45/06***
***A 61P 35/00***
***C 12Q 1/34***
(30) EP 17.09.2008. 08380270
(86) PCT/EP2009062078 17.09.2009.
(96) EP 09783138.2 17.09.2009. En
(87) WO2010031825 25.03.2010. 201012
(97) EP 2340042 06.07.2011. 201127 En
**(54) METHODS AND COMPOSITIONS FOR THE TREATMENT OF CANCER**
(71) Traslational Cancer Drugs Pharma, S.L., Calle Lenceria 4-2r, 47001 Valladolid, ES
(72) RAMÍREZ DE MOLINA, Ana, Enrique Granados 4 p.C. Bajo B, E-28224 Pozuelo de Alarcón - Madrid, ES;
GARCÍA OROZ, Lourdes, Mallorca 6 - 2º1, E-28012 Madrid, ES;
LACAL SANJUÁN, Juan Carlos, San Luis de Potosí, Urbanización el Gasco, E-28250 Torrelodones - Madrid, ES
(74) ABG Patentes, S.L., Avenida de Burgos 16D, Edificio Euromor, 28036 Madrid, ES

**(51) (8)** **EP 2328618 ***
***A 61K 47/32***
(30) US 21.01.2009. 146163 P
US 14.08.2008. 88801 P
US 02.06.2009. 183345 P
US 13.08.2008. 88704 P
US 19.08.2008. 90096 P
US 27.05.2009. 181527 P
(86) PCT/US2009004629 13.08.2009.
(96) EP 09789125.3 13.08.2009. En
(87) WO2010019239 18.02.2010. 201007
(97) EP 2328618 08.06.2011. 201123 En
**(54) PHARMACEUTICAL COMPOSITION OF N-[2,4-BIS(1,1-DIMETHYLETHYL)-5-HYDROXYPHENYL]-1,4-DIHYDRO-4- OXOQUINOLINE-3-CARBOXAMIDE AND ADMINISTRATION THEREOF**
(71) Vertex Pharmceuticals Incorporated, 130 Waverly Street, Cambridge, MA 02139-4242, US
(72) ROWE, William, 770 Highland Avenue, Medford, MA 02155, US;
HURTER, Patricia, 49 Tahanto Trail, Harvard, MA 01451, US;
YOUNG, Christopher, 42 Francis Street, Unit 1, Waltham, MA 02451, US;
DINEHART, Kirk, 60 Hemlock Drive, Holliston, MA 01746, US;
VERWIJS, Marinus, Jacobus, 4 Carter Drive, Framingham, MA 01701, US;
OVERHOFF, Kirk, 47 Alder St. 25, Waltham, MA 02453, US;
GROOTENHUIS, Peter, D., J., 4801 Riding Ridge Road, San Diego, CA 92130, US;
BOTFIELD, Martyn, 47 Walden Terrace, Concord, MA 01742, US;
GROSSI, Alfredo, 102 Ten Hills Road, Somervile, MA 02145, US
(74) Cohausz & Florack, Bleichstraße 14, 40211 Düsseldorf, DE

**(51) (8)** **EP 2323695 ***
***A 61K 47/48***
(30) US 19.08.2008. 189528 P
US 12.11.2008. 198935 P
US 18.02.2009. 153636 P
(86) PCT/US2009004744 19.08.2009.
(96) EP 09789176.6 19.08.2009. En
(87) WO2010021718 25.02.2010. 201008
(97) EP 2323695 25.05.2011. 201121 En
**(54) COMPLEXES OF SMALL-INTERFERING NUCLEIC ACIDS**
(71) Nektar Therapeutics, 455 Mission Bay Boulevard South, Suite 100, San Francisco, CA 94185, US
(72) MCMANUS, Samuel, P., 8867 Tacoma Trail, Huntsville, Alabama 35802, US;
RILEY, Timothy, A., 211 Morningwalk Lane, Huntsville, Alabama 35824, US;
CULBERTSON, Sean, 587 Esslinger Drive, Gurley, Alabama 35748, US;
KOZLOWSKI, Antoni, 2209 Fairfax Street, Huntsville, Alabama 35811, US;
FRY, Dennis, G., 126 Fred Atkinson Road, Huntsville, Alabama 35806, US;
YOUSO, Patrick, D., 6620 Old Madison Pike, Apt. 912, Huntsville, Alabama 35806, US
(74) Baldock, Sharon Claire, Boult Wade Tennant, Verulam Gardens, 70 Gray's Inn Road, London WC1X 8BT, GB

**(51) (8)** **EP 2326351 ***
***A 61K 47/48***
(30) US 19.08.2008. 189528 P
US 12.11.2008. 198935 P
US 18.02.2009. 153636 P
(86) PCT/US2009004747 19.08.2009.
(96) EP 09789178.2 19.08.2009. En
(87) WO2010021720 25.02.2010. 201008
(97) EP 2326351 01.06.2011. 201122 En
**(54) CONJUGATES OF SMALL-INTERFERING NUCLEIC ACIDS**
(71) Nektar Therapeutics, 455 Mission Bay Boulevard South, Suite 100, San Francisco, CA 94185, US
(72) MCMANUS, Samuel, P., 8867 Tacoma Trail, Huntsville, AL 35802, US;
RILEY, Timothy, A., 211 Morningwalk Lane, Huntsville, AL 35824, US;
CULBERTSON, Sean, 587 Esslinger Drive, Gurley, AL 35748, US;
KOZLOWSKI, Antoni, 2209 Fairfax Street, Huntsville, AL 35811, US;
FRY, Dennis, G., 126 Fred Atkinson Road, Huntsville, AL 35806, US;
YUAN, Xuejun, 6201 Rime Village Drive, Apt 203, Huntsville, AL 35806, US;

SHENG, Dawei, 158 Silo Hill Road, Madison, AL 35758, US;
DIXIT, Vidula, 7584 Old Madison Pike, Apt. 809, Huntsville, AL 35806, US
(74) Baldock, Sharon Claire, Boult Wade Tennant, Verulam Gardens, 70 Gray's Inn Road, London WC1X 8BT, GB

**(51) (8)** **EP 2331139 ***
***A 61K 47/48***
(30) US 11.09.2008. 96112 P
(86) PCT/US2009005092 11.09.2009.
(96) EP 09789293.9 11.09.2009. En
(87) WO2010030366 18.03.2010. 201011
(97) EP 2331139 15.06.2011. 201124 En
**(54) POLYMERIC ALPHA-HYDROXY ALDEHYDE AND KETONE REAGENTS AND CONJUGATION METHOD**
(71) Nektar Therapeutics, 455 Mission Bay Boulevard South, Suite 100, San Francisco, CA 94185, US
(72) CULBERTSON, Sean, M., 587 Esslinger Drive, Gurley, AL 35748, US;
SHEN, Xiaoming, 102 Rainbow Glen Circle, Madison, AL 35758, US;
KOZLOWSKI, Antoni, 2209 Fairfax Street, Huntsville, AL 35811, US;
MCMANUS, Samuel, P., 8867 Tacoma Trail, Huntsville, AL 35802, US
(74) Baldock, Sharon Claire, Boult Wade Tennant, Verulam Gardens, 70 Gray's Inn Road, London WC1X 8BT, GB

**(51) (8)** **EP 2331140 ***
***A 61K 47/48***
***A 61P 35/00***
(30) US 11.08.2008. 87826 P
US 20.10.2008. 106928 P
US 11.11.2008. 113328 P
(86) PCT/US2009004618 11.08.2009.
(96) EP 09789119.6 11.08.2009. En
(87) WO2010019233 18.02.2010. 201007
(97) EP 2331140 15.06.2011. 201124 En
**(54) MULTI-ARM POLYMERIC ALKANOATE CONJUGATES**
(71) Nektar Therapeutics, 455 Mission Bay Boulevard South Suite 100, San Francisco CA 94158, US
(72) KOZLOWSKI, Antoni, 2209 Farifax Street, Huntsville, Alabama 35811, US;
MCMANUS, Samuel P., 8867 Tacoma Trail, Huntsville, Alabama 35802, US;
RIGGS-SAUTHIER, Jennifer, 7917 Smoke Rise Road, Huntsville, Alabama 35802, US;
SHEN, Xiaoming, 102 Rainbow Glen Circle, Madison, Alabama 35758, US;
ZHANG, Wen, 142 Tottenham Way, Madison, Alabama 35758, US
(74) Baldock, Sharon Claire, Boult Wade Tennant, Verulam Gardens, 70 Gray's Inn Road, London WC1X 8BT, GB

**(51) (8)** **EP 2334333 ***
***A 61K 47/48***
***C 07K 14/47***
***A 61P 31/04***
(30) US 19.09.2008. 192584 P
(86) PCT/US2009005190 17.09.2009.
(96) EP 09789326.7 17.09.2009. En
(87) WO2010033205 25.03.2010. 201012
(97) EP 2334333 22.06.2011. 201125 En
**(54) POLYMER CONJUGATES OF V681-LIKE PEPTIDES**
(71) Nektar Therapeutics, 201 Industrial Road, San Carlos, CA 94070, US
(72) ROCZNIAK, Steven, O., 678 Emerald Hill Road, Redwood City, CA 94061, US;
ZHANG, Ping, 215 Park Stone Drive, Madison, AL 35758, US;
MOSKOWITZ, Haim, 6159 Blue Dawn Trail, San Diego, CA 92130, US
(74) Baldock, Sharon Claire, et al, Boult Wade Tennant, Verulam Gardens, 70 Gray's Inn Road, London WC1X 8BT, GB

**(51) (8)** **EP 2334334 ***
***A 61K 47/48***
(30) US 19.09.2008. 192533 P
(86) PCT/US2009005205 17.09.2009.
(96) EP 09789330.9 17.09.2009. En
(87) WO2010033216 25.03.2010. 201012
(97) EP 2334334 22.06.2011. 201125 En
**(54) POLYMER CONJUGATES OF NESIRITIDE PEPTIDES**
(71) Nektar Therapeutics, 201 Industrial Road, San Carlos, CA 94070, US
(72) ZAPPE, Harold, 505 Orville Smith Road, Harvest, Alabama 35749, US;
BOSSARD, Mary, J., 120 Kelvingrove Drive, Madison, Alabama 35758, US
(74) Baldock, Sharon Claire, et al, Boult Wade Tennant, Verulam Gardens, 70 Gray's Inn Road, London WC1X 8BT, GB

**(51) (8)** **EP 2334335 ***
***A 61K 47/48***
***C 07K 14/575***
(30) US 19.09.2008. 192533 P
(86) PCT/US2009005206 17.09.2009.
(96) EP 09789331.7 17.09.2009. En
(87) WO2010033217 25.03.2010. 201012
(97) EP 2334335 22.06.2011. 201125 En
**(54) POLYMER CONJUGATES OF CD-NP PEPTIDES**
(71) Nektar Therapeutics, 201 Industrial Road, San Carlos, CA 94070, US
(72) BOSSARD, Mary J., 120 Kelvingrove Drive, Madison, Alabama 35758, US
(74) Baldock, Sharon Claire, et al, Boult Wade Tennant, Verulam Gardens, 70 Gray's Inn Road, London WC1X 8BT, GB

**(51) (8)** **EP 2334336 ***
***A 61K 47/48***
***C 07K 14/575***
(30) US 19.09.2008. 192672 P
US 18.02.2009. 208089 P
US 19.02.2009. 153960 P
(86) PCT/US2009005207 17.09.2009.
(96) EP 09789332.5 17.09.2009. En
(87) WO2010033218 25.03.2010. 201012
(97) EP 2334336 22.06.2011. 201125 En

**(54) POLYMER CONJUGATES OF OSTEOCALCIN PEPTIDES**
(71) Nektar Therapeutics, 455 Mission Bay Boulevard South, Suite 100, San Francisco, CA 94185, US
(72) ROCZNIAK, Steven O., 678 Emerald Hill Road, Redwood City, California 94061, US;
ALI, Cherie F., 315 Howard Avenue, Burlingame, California 94010, US
(74) Baldock, Sharon Claire, Boult Wade Tennant, Verulam Gardens, 70 Gray's Inn Road, London WC1X 8BT, GB

**(51) (8)** **EP 2334337** *
***A 61K 47/48***
***C 07K 7/06***
(30) US 19.09.2008. 192672 P
US 19.02.2009. 153948 P
(86) PCT/US2009005212 17.09.2009.
(96) EP 09789336.6 17.09.2009. En
(87) WO2010033223 25.03.2010. 201012
(97) EP 2334337 22.06.2011. 201125 En
**(54) POLYMER CONJUGATES OF OPIOID GROWTH FACTOR PEPTIDES**
(71) Nektar Therapeutics, 455 Mission Bay Boulevard South, Suite 100, San Francisco, CA 94185, US
(72) FRY, Dennis, 126 Fred Atkinson Road, Huntsville, Alabama 35806, US;
BREW, Christine Taylor, 836 Corona Drive, Pacifica, California 94044, US;
ROCZNIAK, Steven O., 678 Emerald Hill Road, Redwood City, California 94061, US;
LIU, Xiaofeng, 510 Seaside Court, Union City, California 94587, US
(74) Baldock, Sharon Claire, Boult Wade Tennant, Verulam Gardens, 70 Gray's Inn Road, London WC1X 8BT, GB

**(51) (8)** **EP 2334338** *
***A 61K 47/48***
***C 07K 14/62***
(30) US 19.09.2008. 192607 P
(86) PCT/US2009005189 17.09.2009.
(96) EP 09789325.9 17.09.2009. En
(87) WO2010033204 25.03.2010. 201012
(97) EP 2334338 22.06.2011. 201125 En
**(54) POLYMER CONJUGATES OF C-PEPTIDES**
(71) Nektar Therapeutics, 455 Mission Bay Boulevard South, Suite 100, San Francisco, CA 94185, US
(72) BOSSARD, Mary, J., 120 Kelvingrove Drive, Madison, AL 35758, US;
FRY, Dennis, G., 126 Fred Atkinson Road, Huntsville, AL 35806, US;
ROCZNIAK, Steven, O., 678 Emerald Hill Road, Redwood City, CA 94061, US;
ALI, Cherie, F., 315 Howard Avenue, Burlingame, CA 94010, US;
MOSKOWITZ, Haim, 6159 Blue Dawn Trail, San Diego, CA 92130, US
(74) Baldock, Sharon Claire, Boult Wade Tennant, Verulam Gardens, 70 Gray's Inn Road, London WC1X 8BT, GB

**(51) (8)** **EP 2335736**
***A 61K 47/48***
***A 61K 38/09***
***A 61P 35/00***
***A 61P 43/00***
***A 61P 15/00***
***A 61K 39/00***
(30) CU 30.09.2008. 20080185
(86) PCT/CU2009000007 30.09.2009.
(96) EP 09744314.7 30.09.2009. Es
(87) WO2010037352 08.04.2010. 201014
(97) EP 2335736 22.06.2011. 201125 En
**(54) PHARMACEUTICAL COMPOSITION UTILISING COMBINATIONS OF VARIANTS OF THE GONADOTROPIN-LIBERATING HORMONE (GNRH) AS IMMUNOGEN**
(71) Centro De Ingenieria Genetica Y Biotecnologia, Avenida 31 entre 158 y 190, Cubanacán Playa, Ciudad De La Habana 10600, CU
(72) JUNCO BARRANCO, Jesús, Arturo, Calle 1ra N0 3 entre, y B, Comunidad Científica, 70800 Camagüey, CU;
REYES ACOSTA, Osvaldo, Ave 31 No. 18207, entre 182 y 184, Playa, 10600 Ciudad de La Habana, CU;
BOVER FUENTES, Eddy, Emilio, Calle B, No. 10, Entre 1ra y 2da, Comunidad Científica, 70800 Camagüey, CU;
FUENTES AGUILAR, Franklin, Calle 3ra N0 4 entre, y B Comunidad Científica, 70100 Camagüey, CU;
PIMENTEL VAZQUEZ, Eulogio, Calle B, 19, 1ra y 2da, Comunidad Científica, 70100 Camagüey, CU;
BASULTO BAKER, Roberto, Calle Sociedad Patriótica 6A, entre Padre Carmelo y Carretera Central, Rpto. Alturas del Casino, 70300 Camagüey, CU;
GUILLÉN NIETO, Gerardo, Enrique, Línea 6 e/ N y O piso 4 Vedado, Plaza de la Revolución, .10400 Ciudad Habana, CU;
LOPEZ SAEZ, Yovisleidys, Calle Niña % General Gomez y Padre Valencia 17, 70100 Camagüey, CU;
GARAY PEREZ, Hilda, Elisa, Ave 31 No 18207 entre 182 y 184, 10600 Ciudad Habana, CU;
CALZADA AGUILERA, Lesvia, Calle 3ra N0 4 entre, y B Comunidad Científica, 70100 Camagüey, CU;
CASTRO SANTANA, María, Calle 3ra N0 4 entre, y B Comunidad Científica, 70100 Camagüey, CU;
ARTEAGA MORE, Niurka, Oneysi, Calle 2ra N0 15 entre B y C Comunidad Científica, 70800 Camagüey, CU;
AGUERO BARROCAL, Luis, Alberto, Calle 8va. N0. 12. % 5ta y Ave Betancourt. Puerto, Príncipe, 70800 Camaguey, CU
(74) Jansen, Cornelis Marinus, et al, VEREENIGDE, Johan de Wittlaan 7, 2517 JR Den Haag, NL

**(51) (8)** **EP 2337585** *
***A 61K 47/48***
***C 07K 14/605***
(30) US 19.09.2008. 192585 P
(86) PCT/US2009005217 17.09.2009.
(96) EP 09740206.9 17.09.2009. En
(87) WO2010042145 15.04.2010. 201015
(97) EP 2337585 29.06.2011. 201126 En
**(54) POLYMER CONJUGATES OF GLP-2-LIKE PEPTIDES**
(71) Nektar Therapeutics, 455 Mission Bay Boulevard South, Suite 100, San Francisco, CA 94185, US
(72) BOSSARD, Mary, J., 120 Kelvingrove Drive, Madison, AL 35758, US;

ROCZNIAK, Steven O., 678 Emerald Hill Road, Redwood City, CA 94061, US;
ALI, Cherie F., 315 Howard Avenue, Burlingame, CA 94010, US
(74) Baldock, Sharon Claire, Boult Wade Tennant, Verulam Gardens, 70 Gray's Inn Road, London WC1X 8BT, GB

**(51) (8)** **EP 2340044 ***
***A 61K 47/48***
***A 61P 25/04***
***A 61P 25/36***
(30) US 11.09.2009. 558395
US 16.09.2008. 192247 P
(86) PCT/US2009005174 16.09.2009.
(96) EP 09789323.4 16.09.2009. En
(87) WO2010033195 25.03.2010. 201012
(97) EP 2340044 06.07.2011. 201127 En
**(54) PEGYLATED OPIOIDS WITH LOW POTENTIAL FOR ABUSE**
(71) Nektar Therapeutics, 201 Industrial Road, San Carlos, CA 94070, US
(72) JUDE-FISHBURN, C., Simone, 186 Elwood Street, Redwood City, CA 94062, US;
RIELY, Timothy, A., 211 Morningwalk Lane, Huntsville, AL 35824, US;
ZACARIAS, Alberto, 95 Kimberlin Heights Drive, Oakland, CA 94619, US;
GURSAHANI, Hema, 833 Chrysopolis Drive, Foster City, CA 94404, US
(74) Baldock, Sharon Claire, Boult Wade Tennant, Verulam Gardens, 70 Gray's Inn Road, London WC1X 8BT, GB

**(51) (8)** **EP 2340045 ***
***A 61K 47/48***
***C 07K 7/08***
***A 61P 31/04***
(30) US 19.09.2008. 192586 P
(86) PCT/US2009005210 17.09.2009.
(96) EP 09789334.1 17.09.2009. En
(87) WO2010033221 25.03.2010. 201012
(97) EP 2340045 06.07.2011. 201127 En
**(54) POLYMER CONJUGATES OF PROTEGRIN PEPTIDES**
(71) Nektar Therapeutics, 455 Mission Bay Boulevard South, Suite 100, San Francisco, CA 94185, US
(72) WANG, Yujun, 160 Rainbow Glen Circle, Madison, Alabama 35758, US;
MOSKOWITZ, Haim, 6159 Blue Dawn Trail, San Diego, California 92130, US;
LIU, Xiaofeng, 5170 Seaside Court, Union City, California 94587, US;
ROCZNIAK, Steven O., 678 Emerald Hill Road, Redwood City, California 94061, US;
BOSSARD, Mary J., 120 Kelvingrove Drive, Madison, Alabama 35758, US
(74) Baldock, Sharon Claire, Boult Wade Tennant, Verulam Gardens, 70 Gray's Inn Road, London WC1X 8BT, GB

**(51) (8)** **EP 2340046 ***
***A 61K 47/48***
***C 07K 14/435***
***A 61P 25/04***
(30) US 19.09.2008. 192593 P
(86) PCT/US2009005211 17.09.2009.
(96) EP 09789335.8 17.09.2009. En
(87) WO2010033222 25.03.2010. 201012
(97) EP 2340046 06.07.2011. 201127 En
**(54) POLYMER CONJUGATES OF ZICONOTIDE PEPTIDES**
(71) Nektar Therapeutics, 455 Mission Bay Boulevard South, Suite 100, San Francisco, CA 94185, US
(72) SHENG, Dawei, 158 Silo Hill Road, Madison, Alabama 35758, US;
ZAPPE, Harold, 505 Orville Smith Road, Harvest, Alabama 35749, US;
JUDE-FISHBURN, C. Simone, 186 Elwood Street, Redwood City, California 94062, US;
ROCZNIAK, Steven O., 678 Emerald Hill Road, Redwood City, California 94061, US;
BOSSARD, Mary J., 120 Kelvingrove Drive, Madison, Alabama 35758, US
(74) Baldock, Sharon Claire, Boult Wade Tennant, Verulam Gardens, 70 Gray's Inn Road, London WC1X 8BT, GB

**(51) (8)** **EP 2340047 ***
***A 61K 47/48***
***C 07K 14/47***
(30) US 19.09.2008. 192534 P
(86) PCT/US2009005213 17.09.2009.
(96) EP 09789337.4 17.09.2009. En
(87) WO2010033224 25.03.2010. 201012
(97) EP 2340047 06.07.2011. 201127 En
**(54) POLYMER CONJUGATES OF KISS1 PEPTIDES**
(71) Nektar Therapeutics, 455 Mission Bay Boulevard South, Suite 100, San Francisco, CA 94185, US
(72) MINAMITANI, Elizabeth Louise, 144 Nappier Lane, Lacey's Spring, Alabama 35754, US;
ZAPPE, Harold, 505 Orville Smith Road, Harvest, Alabama 35749, US;
BOSSARD, Mary J., 120 Kelvingrove Drive, Madison, Alabama 35758, US;
ROCZNIAK, Steven O., 678 Emerald Hill Road, Redwood City, California 94061, US;
LIU, Xiaofeng, 5170 Seaside Court, Union City, California 94587, US
(74) Baldock, Sharon Claire, Boult Wade Tennant, Verulam Gardens, 70 Gray's Inn Road, London WC1X 8BT, GB

**(51) (8)** **EP 2340048 ***
***A 61K 47/48***
***C 07K 5/10***
***C 07K 7/02***
(30) US 19.09.2008. 192609 P
(86) PCT/US2009005232 17.09.2009.
(96) EP 09789343.2 17.09.2009. En
(87) WO2010033239 25.03.2010. 201012
(97) EP 2340048 06.07.2011. 201127 En
**(54) POLYMER CONJUGATES OF BIPHALIN PEPTIDES**
(71) Nektar Therapeutics, 201 Industrial Road, San Carlos, CA 94070, US
(72) WANG, Yujun, 160 Rainbow Glen Circle, Madison, Alabama 35758, US;
ZHANG, Ping, 215 Park Stone Drive, Madison, Alabama 35758, US;

BOSSARD, Mary, J., 120 Kelvingrove Drive, Madison, Alabama 35758, US;
ROCZNIAK, Steven, O., 678 Emerald Hill Road, Redwood City, California 94061, US
(74) Baldock, Sharon Claire, et al, Boult Wade Tennant, Verulam Gardens, 70 Gray's Inn Road, London WC1X 8BT, GB

**(51) (8)** **EP 2340050** *
***A 61K 47/48***
***C 07K 14/61***
(30) US 19.09.2008. 192608 P
(86) PCT/US2009005204 17.09.2009.
(96) EP 09740204.4 17.09.2009. En
(87) WO2010033215 25.03.2010. 201012
(97) EP 2340050 06.07.2011. 201127 En
**(54) POLYMER CONJUGATES OF AOD-LIKE PEPTIDES**
(71) Nektar Therapeutics, 455 Mission Bay Boulevard South, Suite 100, San Francisco, CA 94185, US
(72) ALI, Cherie F., 315 Howard Avenue, Burlingame, California 94010, US;
FRY, Dennis G., 126 Fred Atkinson Road, Huntsville, Alabama 35806, US;
BOSSARD, Mary J., 120 Kelvingrove Drive, Madison, Alabama 35758, US;
ROCZNIAK, Steven O., 678 Emerald Hill Road, Redwood City, California 94061, US
(74) Baldock, Sharon Claire, Boult Wade Tennant, Verulam Gardens, 70 Gray's Inn Road, London WC1X 8BT, GB

**(51) (8)** **EP 2341942** *
***A 61K 47/48***
(30) US 19.09.2008. 192672 P
US 18.02.2009. 208089 P
US 19.02.2009. 153966 P
(86) PCT/US2009005192 17.09.2009.
(96) EP 09789327.5 17.09.2009. En
(87) WO2010033207 25.03.2010. 201012
(97) EP 2341942 13.07.2011. 201128 En
**(54) POLYMER CONJUGATES OF THERAPEUTIC PEPTIDES**
(71) Nektar Therapeutics, 455 Mission Bay Boulevard South, Suite 100, San Francisco, CA 94185, US
(72) BOSSARD, Mary, J., 120 Kelvingrove Drive, Madison, AL 35758, US;
ROCZNIAK, Steven, O., 678 Emerald Hill Road, Redwood City, CA 94061, US;
ZAPPE, Harold, 505 Orville Smith Road, Harvest, AL 35759, US;
WANG, Yujun, 160 Rainbow Glen Circle, Madison, AL 35758, US;
ZHANG, Ping, 215 Park Stone Drive, Madison, AL 35758, US;
SHENG, Dawei, 158 Silo Hill Road, Madison, AL 35758, US;
JUDE-FISHBURN, C., Simone, 186 Elwood Street, Redwood City, CA 94062, US;
MINAMITANI, Elizabeth, 144 Nappier Lane, Lacey's Spring, AL 35754, US;
LIU, Xiaofeng, 5170 Seaside Court, Union City, CA 94587, US;
MOSKOWITZ, Haim, 6159 Blue Dawa Trail, San Diego, CA 92130, US;
FRY, Dennis, 126 Fred Atkinson Road, Huntsville, AL 35806, US;
ALI, Cherie, 315 Howard Avenue, Burlingame, CA 94010, US;
BREW, Christine, Taylor, 836 Corona Drive, Pacifica, CA 94044, US
(74) Baldock, Sharon Claire, Boult Wade Tennant, Verulam Gardens, 70 Gray's Inn Road, London WC1X 8BT, GB

**(51) (8)** **EP 2086591** *
***A 61K 48/00***
(30) US 14.11.2006. 858862 P
(86) PCT/US2007023894 14.11.2007.
(96) EP 07867439.7 14.11.2007. En
(87) WO2008060557 22.05.2008. 200821
(97) EP 2086591 12.08.2009. 200933 En
**(54) EFFICIENT NUCLEAR DELIVERY OF ANTISENSE OLIGONUCLEOTIDES**
(71) The Trustees of the University of Pennsylvania, 3160 Chestnut Street, Suite 200, Philadelphia, PA 19104, US
(72) TEWARI, Manorama, 500 Pennbrook Avenue, East Landsdowne, PA 19050, US;
KIM, Younghoon, 2024 Westgate Drive, Bethlehem, PA 18017, US;
DISCHER, Dennis, 205 St. Marks Square, Philadelphia, PA 19104, US
(74) Grünecker, Kinkeldey, Stockmair & Schwanhäusser, Anwaltssozietät, Leopoldstrasse 4, 80802 München, DE

**(51) (8)** **EP 2331141** *
***A 61K 48/00***
(30) US 25.08.2008. 190121 P
(86) PCT/US2009054973 25.08.2009.
(96) EP 09819622.3 25.08.2009. En
(87) WO2010042281 15.04.2010. 201015
(97) EP 2331141 15.06.2011. 201124 En
**(54) ANTISENSE OLIGONUCLEOTIDES DIRECTED AGAINST CONNECTIVE TISSUE GROWTH FACTOR AND USES THEREOF**
(71) Excaliard Pharmaceuticals, Inc., 2141 Palomar Airport Rd., Suite 300, Carlsbad, CA 92011, US;
Isis Pharmaceuticals, Inc., 1896 Rutherford Road, Carlsbad, CA 92008, US
(72) DEAN, Nicholas, M., 2110 Whisper Wind Ln, Encinitas, CA 92024, US;
FOULKES, J. Gordon, 3756 Brand Crest, Encinitas, CA 92024, US;
O`DONNELL, Niall, 4400 Lindell Boulevard, Apt. 19E, St. Louis, MO 63105, US;
BENNETT, C. Frank, 1347 Cassins Street, Carlsbad, CA 92009, US;
FREIER, Susan M., 2946 Renault Street, San Diego, CA 92122, US
(74) Almond-Martin, Carol, et al, Ernest Gutmann - Yves Plasseraud S.A.S., 88, Boulevard des Belges, 69452 Lyon Cedex 06, FR

**(51) (8)** **EP 2334340** *
***A 61L 2/10***
(30) EP 01.09.2008. 08163416
US 01.09.2008. 93437 P
DK 08.10.2008. 200801417
(86) PCT/EP2009061286 01.09.2009.

(96) EP 09809355.2 01.09.2009. En
(87) WO2010023329 04.03.2010. 201009
(97) EP 2334340 22.06.2011. 201125 En
**(54) ASSEMBLY AND METHOD FOR DISINFECTING LUMENS OF MEDICAL DEVICES**
(71) Danmarks Tekniske Universitet, Anker Engelundsvej 1, 2800 Kgs. Lyngby, DK
(72) BAK, Jimmy, Solbakken 16, DK-2670 Greve, DK
(74) Boesen, Johnny Peder, Zacco Denmark A/S, Hans Bekkevolds Allé 7, 2900 Hellerup, DK

**(51) (8)** **EP 2326371 ***
***A 61M 5/31***
***A 61M 5/32***
***A 61M 5/00***
(30) US 18.07.2008. 135262
US 18.09.2008. 192551
(86) PCT/GB2009001798 20.07.2009.
(96) EP 09784750.3 20.07.2009. En
(87) WO2010007395 21.01.2010. 201003
(97) EP 2326371 01.06.2011. 201122 En
**(54) SYSTEMS FOR ADMINISTERING MEDICATION FOR RHEUMATOID ARTHRITIS PATIENTS**
(71) UCB Pharma S.A., Allée de la Recherche 60, 1070 Brussels, BE
(72) McLOUGHLIN, Martin, UCB CellTech, 208 Bath Road, Slough, Berkshire SL1 3WE, GB;
LEE, Alex, c/o Oxo, 601 West 26th Street, Suite 1050, New York, NY 10001, US;
FORMOSA, Dan, c/o Smart Design, 601 West 26th Street 1820, New York, NY 100001, US;
VORDENBERG, Steven, Vordenberg Design Studio, 2 Twillight Farm Lane, Amherst, New Hampshire 03031, US;
VICARI, Joern, c/o Smart Dedign, 601 West 26th Street 1820, New York, NY 10001, US;
FREITAG, Eric, c/o Smart Design, 601 West 26th Street 1820, New York, NY 10001, US;
KONTORVICH, Boris, c/o Smart Design, 601 West 26th Street 1820, New York, NY 10001, US
(74) Smith, Samuel Leonard, J.A. Kemp & Co., 14 South Square, Gray's Inn, London WC1R 5JJ, GB

**(51) (8)** **EP 2341963 ***
***A 61M 5/50***
***A 61M 39/20***
(86) PCT/EP2008063036 29.09.2008.
(96) EP 08804888.9 29.09.2008. En
(87) WO2010034356 01.04.2010. 201013
(97) EP 2341963 13.07.2011. 201128 En
**(54) CAP ASSEMBLY AND PRODUCTION METHOD**
(71) VIFOR (INTERNATIONAL) AG, Rechenstrasse 37, 9001 St. Gallen, CH
(72) KUHN, Peter, Obere Haltenstrasse 20, CH-3625 Heiligenschwendi, CH;
EGLI, Gallus, Kirch 12, CH-3674 Bleiken, CH;
KERN, Philippe, Thunstrasse 67, Steffisburg 3612, CH;
SCHÜPBACH, Mario, Obere Hauptgasse 53, CH-3600 Thun, CH;
WEIBEL-FURER, Ludwig, Harschwendi West 1069, CH-9104 Waldstatt, CH
(74) Gille Hrabal Struck Neidlein Prop Roos, Patentanwälte, Brucknerstrasse 20, 40593 Düsseldorf, DE

**(51) (8)** **EP 2326373 ***
***A 61M 11/06***
***A 61M 15/08***
***A 61M 31/00***
(30) US 01.08.2008. 184358
US 30.03.2009. 414300
(86) PCT/US2009051139 20.07.2009.
(96) EP 09790635.8 20.07.2009. En
(87) WO2010014449 04.02.2010. 201005
(97) EP 2326373 01.06.2011. 201122 En
**(54) METHODS FOR AMELIORATING PAIN AND DEVICES FOR DELIVERING A MEDICAMENT**
(71) Xia, Tian, 2542 S. Lowe, Chicago, IL 60616, US
(72) Xia, Tian, 2542 S. Lowe, Chicago, IL 60616, US
(74) Nordic Patent Service A/S, Pilestræde 58, 1112 Copenhagen K, DK

**(51) (8)** **EP 2341972 ***
***A 61M 25/00***
***A 61M 27/00***
(30) IT 20.10.2008. MI20080348 U
(86) PCT/IB2009054580 19.10.2009.
(96) EP 09744763.5 19.10.2009. It
(87) WO2010046828 29.04.2010. 201017
(97) EP 2341972 13.07.2011. 201128 En
**(54) CATHETER STRUCTURE**
(71) Rocco, Francesco, Via Fogazzaro 20, 20135 Milano, IT
(72) Rocco, Francesco, Via Fogazzaro 20, 20135 Milano, IT
(74) Lampis, Marco, et al, Dragotti & Associati, Via Marina, 6, 20121 Milano, IT

**(51) (8)** **EP 2334367 ***
***A 61M 29/00***
(30) US 21.08.2008. 189670 P
(86) PCT/US2009046840 10.06.2009.
(96) EP 09808551.7 10.06.2009. En
(87) WO2010021779 25.02.2010. 201008
(97) EP 2334367 22.06.2011. 201125 En
**(54) METHOD AND APPARATUS FOR ACCESSING THE WALL OF A VASCULAR STRUCTURE OR OTHER BODY LUMEN WHILE SIMULTANEOUSLY PROVIDING ZONE ISOLATION AND FLUID BYPASS CAPABILITY**
(71) Cornell University, 418 E. 71st Street, Suite 61, New York, NY 10021, US
(72) RIINA, Howard, 125 Birchall Drive, Scarsdale, NY 10583, US;
MILSOM, Jeffrey, 215 E. 68th Street Apt. 32D, New York, NY 10021, US;
CORNHILL, J., Fredrick, 800 Fifth Avenue Apt. 6G, New York, NY 10065, US;
ANDREWS, Robert, 5 Old Mill Road, Norfolk, MA 02056, US;
STROHL, Clair, L., 3 Winston Road, Norfolk, MA 02056, US;
DICKINSON, Edward, L., 13 Stoney Stream Lane, Littleton, MA 01460, US
(74) Füssel, Michael, Lönsstrasse 55, 42289 Wuppertal, DE

**(51) (8)** **EP 2331199 ***
***A 61N 1/30***
(30) US 05.09.2008. 94442 P
(86) PCT/US2009004969 03.09.2009.
(96) EP 09811833.4 03.09.2009. En

(87) WO2010027468 11.03.2010. 201010
(97) EP 2331199 15.06.2011. 201124 En
**(54) IONTOPHORETIC DRUG DELIVERY PACKAGING**
(71) Travanti Pharma Inc, 2520 Pilot Knob Road, Suite 100, Mendota Heights, MN 55120, US
(72) KRINKE, Todd, A., 1511 Pulaski Road, Buffalo, MN 55313, US
(74) Charig, Raymond Julian, et al, Potter Clarkson LLP, Park View House, 58 The Ropewalk, Nottingham, NG1 5DD, GB

**(51) (8)** **EP 2331200 ***
***A 61N 1/30***
(30) US 02.09.2008. 93464 P
(86) PCT/US2009004928 31.08.2009.
(96) EP 09811818.5 31.08.2009. En
(87) WO2010027444 11.03.2010. 201010
(97) EP 2331200 15.06.2011. 201124 En
**(54) SACRIFICIAL ELECTRODE DESIGN AND DELIVERY SPECIES SUITABLE FOR PROLONGED IONTOPHORESIS APPLICATION PERIODS**
(71) Travanti Pharma Inc, 2520 Pilot Knob Road, Suite 100, Mendota Heights, MN 55120, US
(72) EISCHEN, Kathleen, A., 833 Winslow Avenue, St. Paul, MN 55107, US;
ANDERSON, Carter, R., 1016 - 105th Street West, Inver Grove Heights, MN 55077, US;
MORRIS, Russell, L., 27845 Quarry Road, Lindstrom, MN 55045, US
(74) Charig, Raymond Julian, Potter Clarkson LLP, Park View House, 58 The Ropewalk, Nottingham, NG1 5DD, GB

**(51) (8)** **EP 2327450**
***A 61N 7/02***
***A 61B 18/00***
***A 61B 17/225***
***A 61B 17/00***
(96) EP 09177407.5 27.11.2009. En
(97) EP 2327450 01.06.2011. 201122 En
**(54) A cover, a treatment device and a method of use of such a device**
(71) Theraclion SAS, Paris Sante Cochin, 29 Rue du Faubourg Saint Jacques, 75014 Paris, FR
(72) Pechoux, Thierry, 40 bis rue Curial, 75019, Paris, FR
(74) Hepp, Dieter, et al, Hepp Wenger Ryffel AG, Friedtalweg 5, 9500 Wil, CH

**(51) (8)** **EP 2323737 ***
***A 61P 35/00***
***A 61P 29/00***
***A 61K 31/4196***
***C 07D 249/12***
***C 07D 249/14***
***C 07D 249/08***
***C 07D 401/04***
***C 07D 401/10***
***C 07D 401/14***
***C 07D 403/04***
***C 07D 403/08***
***C 07D 403/10***
***C 07D 403/12***
***C 07D 403/14***
***C 07D 405/04***
(30) US 08.08.2008. 188543 P
(86) PCT/US2009053272 10.08.2009.
(96) EP 09791331.3 10.08.2009. En
(87) WO2010017545 11.02.2010. 201006
(97) EP 2323737 25.05.2011. 201121 En
**(54) TRIAZOLE COMPOUNDS THAT MODULATE HSP90 ACTIVITY**
(71) Synta Pharmaceuticals Corp., 45 Hartwell Avenue, Lexington, MA 02421, US
(72) YING, Weiwen, 31 Bayberry Road, Groton, Massachusetts 01450, US;
CHIMMANAMADA, Dinesh U., 26-B Liberty Street, Waltham, Massachusetts 02452, US;
BURLISON, Joseph A., 6 Littles Brook Court, No. 133, Burlington, Massachusetts 01803, US;
ZHANG, Shijie, 27 Lojko Drive, Nashua, New Hampshire 03062, US;
SONG, Minghu, 801 Melrose CT, Chester Springs, Pennsylvania 19425, US;
CHAE, Junghyun, Woosung 4-cha, Apartment 402-203, Shingil-2Dong, 102-8, Youngdengpo-gu, Seoul 150774, KR;
SCHWEIZER, Stefan, 53 Windsor Street, Arlington, Massachusetts 02474, US
(74) Snodin, Michael D., Potter Clarkson LLP, Park View House, 58 The Ropewalk, Nottingham, NG1 5DD, GB

**(51) (8)** **EP 2243529**
***B 01D 3/00***
(96) EP 09158696.6 24.04.2009. De
(97) EP 2243529 27.10.2010. 201043 De
**(54) Fluid entry device**
(71) Sulzer Chemtech AG, Sulzer-Allee 48, 8404 Winterthur, CH
(72) Schaeffer, Pierre, Rümikerstrasse 60, 8409, Winterthur, CH;
Fehr, Emil, Dorfstrasse 47, 8415, Berg am Irchel, CH;
Leuppi, Stefan, Gernstrasse 3, 8409, Winterthur, CH
(74) Sulzer Management AG, Patentabteilung / 0067, Zürcherstrasse 14, 8401 Winterthur, CH

**(51) (8)** **EP 2286919**
***B 01L 3/00***
***B 01L 3/14***
***A 61B 10/00***
***G 01N 1/40***
(30) FR 21.07.2009. 0903571
(96) EP 10167532.0 28.06.2010. Fr

(97) EP 2286919 23.02.2011. 201108 Fr
**(54) Filtration device for analyses**
(71) Advance Invest, 85 rue Henri Barbusse, 92190 Meudon, FR
(72) Gabrielli, Marco, 3 Rue Alphonse Daudet, 95170, DEUIL LA BARRE, FR
(74) Gaillarde, Frédéric F. Ch., et al, Cabinet GERMAIN ET MAUREAU, 8 avenue du Président Wilson, 75016 Paris, FR

**(51) (8)** **EP 2323767 ***
***B 01L 3/00***
(30) US 15.08.2008. 228745
(86) PCT/US2009004592 11.08.2009.
(96) EP 09806956.0 11.08.2009. En
(87) WO2010019217 18.02.2010. 201007
(97) EP 2323767 25.05.2011. 201121 En
**(54) APPARATUS AND METHODS FOR MAKING, STORING, AND ADMINISTERING FREEZE-DRIED MATERIALS SUCH AS FREEZE-DRIED PLASMA**
(71) Hemcon Medical Technologies, Inc., 10575 SW Cascade Avenue, Portland, OR 97223, US
(72) PEPPER, Clinton, 22460 Mckenzie Court, West Linn, OR 97068, US;
MCCARTHY, Simon, J., 3715 Nw Gordon Street, Portland, OR 97210, US;
BUCKLEY, Lisa, A., 2406 Ne 12th, Portland, OR 97212, US;
MEYER, Eric, K., 4633 SE Teakwood St., Hilsboro, OR 97123, US
(74) Dee, Ian Mark, et al, Potter Clarkson LLP, Park View House, 58 The Ropewalk, Nottingham, NG1 5DD, GB

**(51) (8)** **EP 2323770 ***
***B 02C 13/28***
(30) BE 19.09.2008. 200800520
(86) PCT/EP2009060981 26.08.2009.
(96) EP 09814104.7 26.08.2009. Fr
(87) WO2010031663 25.03.2010. 201012
(97) EP 2323770 25.05.2011. 201121 Fr
**(54) COMPOSITE IMPACTOR FOR PERCUSSION CRUSHERS**
(71) Magotteaux International SA, Rue Adolphe Dumont, 4051 Vaux-sous-Chevremont, BE
(72) BERTON, Guy, Thier de l'Eglise 5, B-4210 Oteppe, BE
(74) pronovem, Office Van Malderen, Boulevard de la Sauvenire 85/043, 4000 Lige, BE

**(51) (8)** **EP 2328693 ***
***B 07C 5/342***
(30) FR 30.07.2008. 0804363
FR 07.05.2009. 0902217
(86) PCT/FR2009000926 24.07.2009.
(96) EP 09784302.3 24.07.2009. Fr
(87) WO2010012892 04.02.2010. 201005
(97) EP 2328693 08.06.2011. 201123 Fr
**(54) METHOD FOR AUTOMATICALLY IDENTIFYING A MATERIAL OR AN OBJECT**
(71) Lambert, Claude, 16, allée des Thuyas, 91240 St-Michel-sur-Orge, FR;
Hachin, Jean-Michel, 15, rue Trébois, 92300 Levallois Perret, FR
(72) Lambert, Claude, 16, allée des Thuyas, 91240 St-Michel-sur-Orge, FR;
Hachin, Jean-Michel, 15, rue Trébois, 92300 Levallois Perret, FR
(74) Mazabraud, Xavier, Cabinet Moutard, 35, rue de la Paroisse, BP 20513, F-78005 Versailles Cedex, FR

**(51) (8)** **EP 2331271 ***
***B 21C 37/15***
***B 21C 37/20***
***B 21D 5/08***
***B 21D 5/12***
***B 21D 15/02***
(86) PCT/IT2008000529 01.08.2008.
(96) EP 08808221.9 01.08.2008. En
(87) WO2010013273 04.02.2010. 201005
(97) EP 2331271 15.06.2011. 201124 En
**(54) METHOD OF PROFILING A TUBE OF GIVEN LENGTH**
(71) Vavit S.R.L., Piazza Martiri della Libertà 3/5, Rivoli, IT
(72) VALLE, Vittorio Renato, Via Pietro Cossa 115/22, I-10146 Torino, IT
(74) Jorio, Paolo, et al, STUDIO TORTA, Via Viotti 9, 10121 Torino, IT

**(51) (8)** **EP 2326438 ***
***B 21D 39/02***
***B 21D 39/00***
***B 62D 65/06***
(30) US 04.08.2008. 86001 P
(86) PCT/US2009052657 04.08.2009.
(96) EP 09805421.6 04.08.2009. En
(87) WO2010017171 11.02.2010. 201006
(97) EP 2326438 01.06.2011. 201122 En
**(54) APPARATUS AND METHOD TO CRADLE AND HEM PANELS AT AN ASSEMBLY-LINE STATION**
(71) Modern Body Engineering Corporation, 32801 Dequindre Road, Madison Heights, MI 48071-1545, US
(72) CAMPIAN, Jonathon, R., 4413 Hycliffe, Troy, MI 48098, US
(74) Howson, Richard G.B., et al, Kilburn & Strode LLP, 20 Red Lion Street, London WC1R 4PJ, GB

**(51) (8)** **EP 2251116**
***B 21F 25/00***
***G 08B 13/12***
(96) EP 09159951.4 11.05.2009. En
(97) EP 2251116 17.11.2010. 201046 En
**(54) Barbed tape with sensor conductor and reinforcement wire**
(71) Kösedag Tel Örme Sanayi Ve, Ticaret Ithalat Ihracat A.S., Istanbul Tuzla Organize Sanayi Bölgesi (ITOSB), 2 Cadde, no: 1, Eski Ankara Yolu, Tepeören-Tuzla, 34940 Istanbul, TR
(72) Kösedag, Ali, KÖSEDAG Tel Örme Sanayi ve Ticaret Ithalat, Ihracat A.S., Istanbul Tuzla Organize Sanayi Bölgesi (ITOSB), 2. cadde No:1 Tepeören Tuzla, 34940 Istanbul, TR
(74) Sevinç, Erkan, Istanbul Patent & Trademark Consultancy Ltd., Plaza-33, Büyükdere cad. No: 33/16, Sisli, 34381 Istanbul, TR

**(51) (8)** **EP 2326442 ***
***B 22D 17/04***
***C 22C 18/00***
(30) US 17.09.2008. 97570 P
(86) PCT/US2009057230 17.09.2009.

(96) EP 09815157.4 17.09.2009. En
(87) WO2010033650 25.03.2010. 201012
(97) EP 2326442 01.06.2011. 201122 En
**(54) MULTI-COMPONENT METAL INJECTION MOLDING**
(71) Cool Polymers, Inc., 179 Mounstain Road Suite 3, Concord, NH 03301, US
(72) MCCULLOUGH, Kevin, A., 61 Candlewood Drive, North Kingstown, RI 02852, US;
MILLER, James, D., 5305 Davenport Place, Roswell, GA 02852, US
(74) Hofstetter, Alfons J., Hofstetter, Schurack & Skora, Balanstrasse 57, 81541 München, DE

**(51) (8)** **EP 2323813 ***
***B 24D 18/00***
***B 24D 3/32***
(30) IT 08.08.2008. VI20080194
(86) PCT/IB2009006479 07.08.2009.
(96) EP 09799132.7 07.08.2009. It
(87) WO2010015923 11.02.2010. 201006
(97) EP 2323813 25.05.2011. 201121 En
**(54) METHOD FOR PRODUCING A TOOL AND TOOL PRODUCED ACCORDING TO SAID METHOD**
(71) Fasolato, Lino, Viale Ferrarin 31, 36100 Vicenza, IT
(72) Fasolato, Lino, Viale Ferrarin 31, 36100 Vicenza, IT
(74) Bonini, Ercole, Studio Bonini Srl, Corso Fogazzaro, 8, 36100 Vicenza, IT

**(51) (8)** **EP 2266769**
***B 28B 11/24***
(96) EP 09425244.2 25.06.2009. It
(97) EP 2266769 29.12.2010. 201052 En
**(54) A process for manufacturing very slim ceramic tiles**
(71) Iniziativa Otto S.r.l., Via Riccoboni 31, 41124 Modena, IT
(72) Bonezzi, Massimo, Viale Bellini 96, 41049 Sassuolo, Modena, IT
(74) Colò, Chiara, Bugnion S.p.A., Via Vellani Marchi, 20, 41124 Modena, IT

**(51) (8)** **EP 2156937**
***B 29C 45/28***
(30) DE 22.08.2008. 102008039336
(96) EP 09009703.1 28.07.2009. De
(97) EP 2156937 24.02.2010. 201008 De
**(54) Injection moulding tool with closable heating channel nozzle**
(71) Otto Männer Innovation GmbH, Unter Gereuth 9-11, 79353 Bahlingen, DE
(72) Selak, Vincenc, 15 Rue du Cormoran, 67860 Rhinau, FR; Spuller, Swen, Hessenstrasse 4, 79362 Forchheim, DE
(74) Dimmerling & Huwer, Patentanwälte, Guntherstraße 3, 76185 Karlsruhe, DE

**(51) (8)** **EP 2335915**
***B 30B 11/02***
***A 61J 3/10***
(30) JP 08.09.2008. 2008229574
(86) PCT/JP2009065581 07.09.2009.
(96) EP 09811593.4 07.09.2009. Ja
(87) WO2010027069 11.03.2010. 201010
(97) EP 2335915 22.06.2011. 201125 En
**(54) TABLET COMPRESSION DIE**
(71) TAISHO PHARMACEUTICAL CO., LTD, 24-1 Takada 3-chome, Toshima-ku, Tokyo 170-8633, JP
(72) ANDO, Shinji, c/o TAISHO PHARMACEUTICAL CO. LTD., 24-1 Takada 3-chome, Toshima-ku, Tokyo 170-8633, JP;
YOSHIDA, Kenji, c/o TAISHO PHARMACEUTICAL CO. LTD., 24-1 Takada 3-chome, Toshima-ku, Tokyo 170-8633, JP
(74) Vossius & Partner, Siebertstrasse 4, 81675 München, DE

**(51) (8)** **EP 2323840 ***
***B 31F 1/20***
***B 30B 3/00***
***B 30B 11/18***
(30) NZ 25.06.2008. 56942508
(86) PCT/NZ2009000121 25.06.2009.
(96) EP 09770447.2 25.06.2009. En
(87) WO2009157785 30.12.2009. 200953
(97) EP 2323840 25.05.2011. 201121 En
**(54) IMPROVEMENTS IN CORRUGATING ROLLERS**
(71) Corcel IP Limited, James & Wells, Level 12 KPMG Centre, 85 Alexandra Street, Hamilton 3204, NZ
(72) VAN BERLO, Patrick, Petrus, Antonius, Maria, 22 Rangatira Street, Karapiro, Cambridge 3494, NZ
(74) Wilson Gunn, 5th Floor, Blackfriars House, The Parsonage, Manchester, M3 2JA, GB

**(51) (8)** **EP 2340161 ***
***B 32B 3/28***
***B 32B 29/08***
(30) NZ 01.10.2008. 57171608
(86) PCT/NZ2009000206 29.09.2009.
(96) EP 09818037.5 29.09.2009. En
(87) WO2010039047 08.04.2010. 201014
(97) EP 2340161 06.07.2011. 201127 En
**(54) MANUFACTURING PROCESS**
(71) Corcel IP Limited, Level 12, KPMG Centre, 85 Alexandra Street, Hamilton 3204, NZ
(72) VAN BERLO, Patrick, Petrus, Antonius, Maria, 22 Rangatira Street, Karapiro, Cambridge 3494, NZ
(74) Wilson Gunn, 5th Floor, Blackfriars House, The Parsonage, Manchester, M3 2JA, GB

**(51) (8)** **EP 2323842 ***
***B 32B 13/04***
(30) US 29.08.2008. 93167 P
US 08.06.2009. 480159
(86) PCT/US2009055113 27.08.2009.
(96) EP 09810552.1 27.08.2009. En
(87) WO2010025207 04.03.2010. 201009
(97) EP 2323842 25.05.2011. 201121 En
**(54) PLASTIC COATED COMPOSITE BUILDING BOARDS AND METHOD OF MAKING SAME**
(71) Certainteed Gypsum, Inc., 4300 W. Cypress Street, Suite 500, Tampa, FL 33607-4157, US
(72) BOYDSTON, Jerry, D., 124 Siddle Drive, Cody, WY 82414, US;
HAUBER, Robert, J., 10133 Queens Park Drive, Tampa, FL 33647, US
(74) Pugsley, Victoria Antonietta, Chapman Molony, Patent & Trademark Attorneys, 20 Staple Gardens, Winchester SO23 8SR, GB

**(51) (8)** **EP 2337681** *
***B 32B 15/10***
***B 32B 15/085***
***B 32B 21/08***
***B 27D 5/00***
(30) FI 23.09.2008. 20085899
(86) PCT/FI2009050664 17.08.2009.
(96) EP 09815721.7 17.08.2009. En
(87) WO2010034878 01.04.2010. 201013
(97) EP 2337681 29.06.2011. 201126 En
**(54) WOOD-METAL COMPOSITE STRUCTURE**
(71) UPM-Kymmene Wood Oy, Niemenkatu 16, 15140 Lahti, FI
(72) KILJUNEN, Samantha, Lietokatu 12, FI-53500 Lappeenranta, FI;
HINTIKKA, Milla, c/o UPM-Kymmene Wood Oy, Niemenkatu 16, FI-15140 Lahti, FI;
RAUTIAINEN, Raija, Parraspolku 5, FI-15150 Lahti, FI;
BULBUL, Mizanur, c/o UPM-Kymmene Wood Oy, Niemenkatu 16, FI-15140 Lahti, FI;
LIIMATAINEN, Juhana, Myllytie 3 as. 1, FI-54800 Savitaipale, FI
(74) Papula Oy, Mechelininkatu 1 a, 00180 Helsinki, FI

**(51) (8)** **EP 2342077** *
***B 32B 21/08***
***B 32B 21/06***
***B 32B 27/10***
***B 32B 27/32***
(30) FI 23.09.2008. 20085896
(86) PCT/FI2009050663 17.08.2009.
(96) EP 09815720.9 17.08.2009. En
(87) WO2010034877 01.04.2010. 201013
(97) EP 2342077 13.07.2011. 201128 En
**(54) COATING FOR WOOD BOARD AND WOOD BOARD**
(71) UPM-Kymmene Wood Oy, Niemenkatu 16, 15140 Lahti, FI
(72) KILJUNEN, Samantha, Lietokatu 12, FI-53500 Lappeenranta, FI;
HINTIKKA, Milla, c/o UPM-Kymmene Wood Oy, Niemenkatu 16, FI-15140 Lahti, FI;
RAUTIAINEN, Raija, Parraspolku 5, FI-15150 Lahti, FI;
BULBUL, Mizanur, c/o UPM-Kymmene Wood Oy, Niemenkatu 16, FI-15140 Lahti, FI;
HANNUKAINEN, Jouko, c/o UPM-Kymmene Wood Oy, Niemenkatu 16, FI-15140 Lahti, FI
(74) Papula Oy, Mechelininkatu 1 a, 00180 Helsinki, FI

**(51) (8)** **EP 2233292**
***B 41J 2/01***
(30) JP 01.10.2008. 2008255977
(86) PCT/JP2009005018 30.09.2009.
(96) EP 09817485.7 30.09.2009. Ja
(87) WO2010038443 08.04.2010. 201014
(97) EP 2233292 29.09.2010. 201039 En
**(54) INKJET PRINTER AND PRINTING METHOD USING SAME**
(71) Mimaki Engineering Co., Ltd., 2182-3, Sigenu-Otsu, Shigeno, Tomi-shi, Nagano 389-0512, JP
(72) TAKEZAWA, Satoshi, C/O MIMAKI ENGINEERING CO. LTD., 2182-3, Shigeno-Otsu, Tomi-shi, Nagano 389-0512, JP;
FURUHATA, Tomotaka, C/O MIMAKI ENGINEERING CO. LTD., 2182-3, Shigeno-Otsu, Tomi-shi, Nagano 389-0512, JP;
MITSUI, Takayuki, C/O MIMAKI ENGINEERING CO. LTD., 2182-3, Shigeno-Otsu, Tomi-shi, Nagano 389-0512, JP;
HISHIDA, Yuko, C/O MIMAKI ENGINEERING CO. LTD., 2182-3, Shigeno-Otsu, Tomi-shi, Nagano 389-0512, JP
(74) Gendron, Vincent Christian, et al, S.A. Fedit-Loriot, 38, avenue Hoche, 75008 Paris, FR

**(51) (8)** **EP 2216180**
***B 41J 2/175***
(30) DK 09.02.2009. 200900030 U
(96) EP 10388001.9 09.02.2010. Da
(97) EP 2216180 11.08.2010. 201032 En
**(54) A system for supplying ink to a printing machine**
(71) Masytec A/S, Vallensbaekvej 31, 2605 Broendby, DK
(72) Herloev, Jesper, c/o Masytec A/S, Vallensbaekvej 31, 2605 Broendby, DK
(74) Larsen, Hans Ole, et al, Larsen & Birkeholm A/S, Skandinavisk Patentbureau, Banegaardspladsen 1, 1570 Copenhagen V, DK

**(51) (8)** **EP 2233297**
***B 41J 2/175***
(30) JP 29.09.2008. 2008250652
(86) PCT/JP2009004947 28.09.2009.
(96) EP 09815922.1 28.09.2009. Ja
(87) WO2010035503 01.04.2010. 201013
(97) EP 2233297 29.09.2010. 201039 En
**(54) INK SUPPLY DEVICE FOR INKJET PRINTER, AND REVERSE FLOW BLOCKING DEVICE FOR SAME**
(71) Mimaki Engineering Co., Ltd., 2182-3, Sigenu-Otsu, Tomi-shi, Nagano 389-0512, JP
(72) TAMAKI, Kazutaka, C/O MIMAKI ENGINEERING CO. LTD., 2182-3, Shigeno-Otsu, Tomi-shi, Nagano 389-0512, JP
(74) Gendron, Vincent Christian, et al, S.A. Fedit-Loriot, 38, avenue Hoche, 75008 Paris, FR

**(51) (8)** **EP 2233305**
***B 41J 11/66***
***B 41J 2/01***
***B 41J 3/54***
(30) JP 25.09.2008. 2008246543
(86) PCT/JP2009066636 25.09.2009.
(96) EP 09816195.3 25.09.2009. Ja
(87) WO2010035780 01.04.2010. 201013
(97) EP 2233305 29.09.2010. 201039 En
**(54) PRINTER-PLOTTER**
(71) Mimaki Engineering Co., Ltd., 2182-3, Sigenu-Otsu, Shigeno, Tomi-shi, Nagano 389-0512, JP
(72) IKEDA Akira, c/o MIMAKI ENGINEERING Co. Ltd., 2182-3 Shigeno-Otsu, Tomi-shi, Nagano 389-0512, JP;
OHNISHI Masaru, c/o MIMAKI ENGINEERING Co. Ltd., 2182-3 Shigeno-Otsu, Tomi-shi, Nagano 389-0512, JP;
KOBAYASHI Akio, c/o MIMAKI ENGINEERING Co. Ltd., 2182-3 Shigeno-Otsu, Tomi-shi, Nagano 389-0512, JP
(74) Gendron, Vincent Christian, et al, S.A. Fedit-Loriot, 38, avenue Hoche, 75008 Paris, FR

**(51) (8)** **EP 2082895**
***B 42D 15/02***
(30) DE 23.01.2008. 202008001012 U

(96) EP 09150523.0 14.01.2009. En
(97) EP 2082895 29.07.2009. 200931 En
**(54) Massage card**
(71) Chen, Jen-Lin, 10180 Prado Vista Drive, Cupertino, CA 95014, US
(72) Chen, Jen-Lin, 10180 Prado Vista Drive, Cupertino, CA 95014, US
(74) Cohausz & Florack, Patent- und Rechtsanwälte, Partnerschaftsgesellschaft, Bleichstraße 14, 40211 Düsseldorf, DE

**(51) (8)** **EP 2329983**
***B 60K 7/00***
***B 60K 17/04***
(30) US 02.12.2009. 629204
(96) EP 10163630.6 21.05.2010. En
(97) EP 2329983 08.06.2011. 201123 En
**(54) Wheel drive assembly and a spindle carrier**
(71) Fairfield Manufacturing Company, Inc., US Route 52, South Lafayette IN 47903, US
(72) Schoon, Benjamin Warren, 8486 E100N, Lafayette, IN 47905, US
(74) Borchert, Uwe Rudolf, Puschmann Borchert Bardehle, Patentanwälte Partnerschaft, Bajuwarenring 21, 82041 Oberhaching, DE

**(51) (8)** **EP 2323886 ***
***B 61F 15/20***
***B 61L 25/02***
***B 61D 43/00***
(30) AT 15.09.2008. 14332008
(86) PCT/AT2009000333 27.08.2009.
(96) EP 09775615.9 27.08.2009. De
(87) WO2010028417 18.03.2010. 201011
(97) EP 2323886 25.05.2011. 201121 De
**(54) WHEELSET BEARING HOUSING HAVING A POSITION DETECTION DEVICE FOR A RAIL VEHICLE AND RAIL VEHICLE EQUIPPED THEREWITH**
(71) PJ Messtechnik GmbH, Waagner-Biro-Strasse 125, 8020 Graz, AT
(72) ZELLER, Reinhard, Leitersdorf 37, A-8504 Hengstberg, AT;
PETSCHNIG, Günter, Wastiangasse 9/1/5, A-8010 Graz, AT;
JOCH, Martin, Andritzerreichsstrasse 62a, A-8045 Graz, AT
(74) Margotti, Herwig Franz, Schwarz & Partner, Patentanwälte, Wipplingerstrasse 30, 1010 Wien, AT

**(51) (8)** **EP 2256014**
***B 62B 5/02***
(30) IT 30.05.2009. MC20090131
(96) EP 09173780.9 22.10.2009. It
(97) EP 2256014 01.12.2010. 201048 En
**(54) Mobile stairlift device**
(71) KSP Italia S.r.l., Via dell'Artigianato, 1, 06031 Bevagna (PG), IT
(72) Emanuelli, Claudio, Via Montepennino Loc. Vallo, 16, 06036, Montefalco (PG), IT;
Bertoldi, Giampiero, Via Monte Carpegna, 32, 06034, Foligno (PG), IT;
Morbidoni, Francesco, Via Monte Cerreto, 18, 06030, Giano Dell'Umbria (PG), IT
(74) Cutropia, Gianluigi, Ing. Claudio Baldi s.r.l., Viale Cavallotti, 13, 60035 Jesi (AN), IT

**(51) (8)** **EP 2331392 ***
***B 63B 19/00***
***B 63B 19/14***
***B 63B 19/24***
***B 63B 43/32***
(30) NL 19.09.2008. 2001996
(86) PCT/NL2009050561 18.09.2009.
(96) EP 09788326.8 18.09.2009. Nl
(87) WO2010033026 25.03.2010. 201012
(97) EP 2331392 15.06.2011. 201124 En
**(54) LOCKING ELEMENT AND LOCKING SYSTEM FOR A SHIP'S DOOR, SHIP'S WINDOW OR SHIP'S HATCH**
(71) Newthex Ned. B.v., Molenraai 11, 9611 TH Sappemeer, NL
(72) DE ROVER, Jan, Vechtlaan 13, NL-9606 RJ Kropswolde, NL
(74) Jansen, Cornelis Marinus, VEREENIGDE, Johan de Wittlaan 7, 2517 JR Den Haag, NL

**(51) (8)** **EP 2138402**
***B 64F 5/00***
***E 04G 1/36***
(30) HU 07.04.2008. 0800217
(96) EP 09462003.6 07.04.2009. Hu
(97) EP 2138402 30.12.2009. 200953 En
**(54) Variable modular docking system**
(71) Multiprojekt Kft., Komáromi út 22, 2040 Budaörs, HU; Aquaprojekt Kft., Bartók Béla u. 30, 1118 Budapest, HU
(72) Fazekas, Gábor, Pelikán u. 36, 2030 Érd, HU;
Pető, Lajos, Bereck u. 34, 1118 Budapest, HU;
Kollár, Lajos, Szerémi u. 12/A, IV/19, 1117 Budapest, HU
(74) Kacsuk, Zsófia, Üteg u. 11/a, 1139 Budapest, HU

**(51) (8)** **EP 2246261**
***B 65B 1/24***
***B 65B 61/24***
(96) EP 09159244.4 30.04.2009. De
(97) EP 2246261 03.11.2010. 201044 De
**(54) Method and device for levelling packages filled with bulk material or paste goods**
(71) Robert Bosch GmbH, Postfach 30 02 20, 70442 Stuttgart, DE
(72) Weis, Michael, Nelkenweg 14, 71686 Remseck, DE;
Zill, Tobias, Pliensbacher Weg 23, 73110 Hattenhofen, DE

**(51) (8)** **EP 2334561 ***
***B 65B 31/08***
***B 65B 55/02***
***B 65D 81/20***
(30) BE 29.08.2008. 200800481
(86) PCT/IB2009053794 31.08.2009.
(96) EP 09787057.0 31.08.2009. Nl
(87) WO2010023640 04.03.2010. 201009
(97) EP 2334561 22.06.2011. 201125 En
**(54) SYSTEM, METHOD AND DEVICE FOR STERILIZATION AND PACKAGING FOR USE THEREFOR**
(71) Ryckewaert, Jan Jozef, Eikhofstraat 47, 8600 Diksmuide, BE;

Wallays, Johan Daniël, Dikkebusseweg 29, 8900 Ieper, BE
(72) Ryckewaert, Jan Jozef, Eikhofstraat 47, 8600 Diksmuide, BE;
Wallays, Johan Daniël, Dikkebusseweg 29, 8900 Ieper, BE
(74) Duyver, Jurgen Martha Herman, et al, Gevers & Vander Haeghen, Intellectual Property House, Holidaystraat 5, 1831 Diegem, BE

**(51) (8)** **EP 2241507**
***B 65B 39/00***
***B 65B 39/04***
***B 65B 31/04***
***B 65B 55/02***
(30) IT 15.04.2009. BS20090071
(96) EP 10157982.9 26.03.2010. It
(97) EP 2241507 20.10.2010. 201042 En
**(54) Apparatus for filling flexible containers with a fluid, for example foodstuffs, such as cream, yoghurt, fruit juices and purées, vegetables and similar**
(71) Flextech S.r.l., Strada Alessandri acqui, 2/A, 15073 Castellazzo Bormida, IT
(72) Laguzzi, Fulvio, Strada Valmaggiore, 52, 14017 Valfenera ASTI, IT
(74) Pulieri, Gianluca Antonio, Jacobacci & Partners S.p.A., Piazza della Vittoria, 11, 25122 Brescia, IT

**(51) (8)** **EP 2342135 ***
***B 65B 57/02***
***B 65B 13/04***
***B 65B 57/08***
(30) US 29.05.2008. 57059
(86) PCT/US2009045691 29.05.2009.
(96) EP 09759126.7 29.05.2009. En
(87) WO2009148965 10.12.2009. 200950
(97) EP 2342135 13.07.2011. 201128 En
**(54) SYSTEMS FOR MONITORING AND CONTROLLING USAGE OF MATERIALS**
(71) Atlantic Corporation, 806 North 23rd Street, Wilmington, NC 28405, US
(72) CARTER, Russell, M., 1621 Country Club Road, Wilmington, NC 28403, US;
LAUGHTER, Bruce, 701 Circle Trace Road, Monroe, NC 28110, US;
WALKER, Robert, J., 2227 Talmage Drive, Leland, NC 28451, US
(74) Peckmann, Ralf, Reinhard, Skuhra, Weise & Partner GbR, Patent- und Rechtsanwälte, Friedrichstrasse 31, 80801 München, DE

**(51) (8)** **EP 2334565 ***
***B 65D 1/34***
***B 65D 21/02***
***G 01N 23/02***
***G 01N 23/04***
***G 01N 23/083***
***G 01N 23/10***
(30) US 05.09.2008. 94743 P
US 15.09.2008. 97060 P
(86) PCT/CA2008002025 17.11.2008.
(96) EP 08876865.0 17.11.2008. En
(87) WO2010025538 11.03.2010. 201010
(97) EP 2334565 22.06.2011. 201125 En
**(54) TRAY FOR USE IN PERFORMING X-RAY INSPECTION OF ARTICLES AT A SECURITY CHECKPOINT AND METHOD OF USING SAME**
(71) Optosecurity Inc., 505 Blvd. du Parc Technologique, Québec QC G1P 4S9, CA
(72) ROUX, Michel, 590 Avenue du Fleuve, Quebec, Quebec G1E 3N2, CA;
BOUCHARD, Michel, R., 4802 Rue des Grbes, Saint-Augustin-de-Desmaures, Quebec G3A 2B9, CA;
PERRON, Luc, 1127 De La Chatelaine, Charlesbourg, Quebec G2L 1A1, CA
(74) Kurtz, Laurent Charles Edmond, Santarelli, 14 avenue de la Grande Armée, 75017 Paris, FR

**(51) (8)** **EP 2331414 ***
***B 65D 5/38***
***B 65D 5/72***
(30) EP 30.09.2008. 08253191
(86) PCT/EP2009007012 29.09.2009.
(96) EP 09778773.3 29.09.2009. En
(87) WO2010037529 08.04.2010. 201014
(97) EP 2331414 15.06.2011. 201124 En
**(54) DUAL COMPARTMENT SLIDE AND SHELL CONTAINER**
(71) Philip Morris Products S.A., Quai Jeanrenaud 2, 2000 Neuch?tel, CH
(72) BOURGOIN, Philippe, Chemin du Crépon 12B, CH-1040 Echallens, CH;
BENKÖ, Peter, Hangstrasse 18a, CH-4654 Lostorf, CH;
NÜTZI, Roger, Länggasse 34, CH-4624 Härkingen, CH;
SAMULEWICZ, Aleksandra, Chemin de Montéclard 26, CH-1066 Epalinges, CH
(74) Millburn, Julie Elizabeth, Reddie & Grose, 16 Theobalds Road, London WC1X 8PL, GB

**(51) (8)** **EP 2246267**
***B 65D 23/02***
***B 05B 11/00***
***B 29C 49/18***
***B 29C 49/24***
***B 29C 49/16***
***B 29C 49/06***
(30) IT 30.04.2009. MI20090741
(96) EP 10160339.7 19.04.2010. It
(97) EP 2246267 03.11.2010. 201044 En
**(54) Container associable with airless pumps and method for its production**
(71) Patrini, Orsola, Via Robati 69, 26010 Capergnanica, IT
(72) Patrini, Orsola, Via Robati 69, 26010 Capergnanica, IT
(74) Vanosi, Adelio Valeriano, GIAMBROCONO & C. S.p.A., Via Rosolino Pilo, 19/B, 20129 Milano, IT

**(51) (8)** **EP 2202174**
***B 65D 43/02***
***B 65D 77/20***
(30) FI 23.12.2008. 20086238
(96) EP 09178465.2 09.12.2009. En
(97) EP 2202174 30.06.2010. 201026 En
**(54) Container lid**
(71) Arta Plast AB, Antennvägen 1, 135 48 Tyresö, SE
(72) Backman, Johan, Bangatan 5, 66900 Nykarleby, FI;
Elenius, Leif, Europa 14, 68600 Jakobstad, FI;
Björklund, Kjell, Bornholmsvägen 66, 68560 Eugmo, FI;

Jakobsson, Stefan, Kisorvägen 54, 68620 Jakobstad, FI
(74) Niedmers, Ole, et al, Patentanwälte, Niedmers Jaeger Köster, Van-der-Smissen-Strasse 3, 22767 Hamburg, DE

**(51) (8)** **EP 2326565** *
***B 65D 43/14***
(30) US 23.09.2008. 236217
(86) PCT/US2009030812 13.01.2009.
(96) EP 09816605.1 13.01.2009. En
(87) WO2010036382 01.04.2010. 201013
(97) EP 2326565 01.06.2011. 201122 En
**(54) TWO-PIECE CLOSURE DEVICE**
(71) TDW DELAWARE, INC., 1100 Market Street, Suite 780, Wilmington, Delaware 19801, US
(72) SMITH, Dennis R., 1712 West 63rd Street, Tulsa, Oklahoma 74132, US;
FREEMAN, Eric N., 15772 South 81st West Avenue, Kiefer, Oklahoma 74041, US;
STILWELL, Graham Christopher, 27 Bolingbroke Road, Moredon, Swindon, Wiltshire SN2 2JX, GB;
COOPER, Charles Culver Gidden, 6104 Holland Street, Arvada, Colorado 80004, US;
LANGLEY, Gregory Allen, 8232 Harlan Court, Arvada, Colorado 80003, US;
NELSON, Scott Douglas, 2640 Zenobia Street, Denver, Colorado 80212, US
(74) Wood, Graham, Bailey Walsh & Co LLP, 5 York Place, Leeds LS1 2SD, GB

**(51) (8)** **EP 2323920** *
***B 65D 75/58***
(30) ES 18.07.2008. 200802140
(86) PCT/EP2009058476 06.07.2009.
(96) EP 09780165.8 06.07.2009. En
(87) WO2010006943 21.01.2010. 201003
(97) EP 2323920 25.05.2011. 201121 En
**(54) DISCHARGE SPOUT FOR FLEXIBLE BAGS**
(71) Volpak, S.A.U., Poligon Industrial Can Vinyalets, 4 calle Can Vinyalets, 08130 Santa Perpetua De Mogoda, ES
(72) BONET PEDROL, Jaume, Av. Vents, 9 Esc. A 4º 2ª, (VEMSA), E-08917 Badalona, ES
(74) Sugrañes Patentes y Marcas, Calle Provenza 304, 08008 Barcelona, ES

**(51) (8)** **EP 2204340**
***B 65D 88/12***
***B 65D 88/06***
***B 01D 21/02***
***C 02F 1/00***
(30) US 07.02.2005. 52683
(96) EP 10158196.5 07.02.2006. En
(97) EP 2204340 07.07.2010. 201027 En
**(54) Portable tank apparatus and method of use**
(71) Clark, Glenn, 45 Horobin, Fallriver NS B2T 1E6, CA; Morrell, Colin, 2086 Maynard Street, Halifax NS B2K 3T4, CA
(72) Clark, Glenn, 45 Horobin, Fallriver NS B2T 1E6, CA; Morrell, Colin, 2086 Maynard Street, Halifax NS B2K 3T4, CA
(74) Fabris, Stefano, et al, Cantaluppi & Partners S.r.l., Piazzetta Cappellato Pedrocchi, 18, 35122 Padova, IT

**(51) (8)** **EP 2256066**
***B 65D 90/18***
***B 65G 7/04***
(30) FI 28.05.2009. 20095590
(96) EP 10163745.2 25.05.2010. Fi
(97) EP 2256066 01.12.2010. 201048 En
**(54) Method for attaching a transport wheel arrangement to a container and a transport wheel arrangment of a a container**
(71) Yski, Pasi, Prantinkatu 3 B 5, 32700 Huittinen, FI
(72) Yski, Pasi, Prantinkatu 3 B 5, 32700 Huittinen, FI
(74) Suominen, Kaisa Liisa, Turun Patenttitoimisto Oy, P.O.Box 99, 20521 Turku, FI

**(51) (8)** **EP 2334587** *
***B 66F 15/00***
***A 01B 1/02***
***B 65D 1/02***
(30) NZ 05.09.2008. 57102608
(86) PCT/NZ2009000185 04.09.2009.
(96) EP 09813289.7 04.09.2009. En
(87) WO2010030194 18.03.2010. 201011
(97) EP 2334587 22.06.2011. 201125 En
**(54) IMPROVEMENTS IN RELATION TO TOOLS**
(71) Belsey, Maxwell Derek, 21 Main Highway, Ellerslie, Auckland 1051, NZ;
Gray, Terry John, 21 Claude Rd, Epsom, Auckland 1023, NZ
(72) Belsey, Maxwell Derek, 21 Main Highway, Ellerslie, Auckland 1051, NZ;
Gray, Terry John, 21 Claude Rd, Epsom, Auckland 1023, NZ
(74) Goodwin, Mark, Wilson Gunn, 5th Floor, Blackfriars House, The Parsonage, Manchester M3 2JA, GB

**(51) (8)** **EP 2331450** *
***B 67D 1/07***
(30) EP 11.09.2008. 08388029
(86) PCT/EP2009061742 10.09.2009.
(96) EP 09782862.8 10.09.2009. En
(87) WO2010029122 18.03.2010. 201011
(97) EP 2331450 15.06.2011. 201124 En
**(54) METHOD FOR CLEANING AND FLUSHING A BEVERAGE DISPENSING SYSTEM**
(71) Carlsberg Breweries A/S, Ny Carlsberg Vej 100, 1760 Copenhagen V, DK
(72) RASMUSSEN, Jan Nørager, Rytterbakken 22, DK-3650 Ølstykke, DK;
VESBORG, Steen, Dronningemarken 4, DK-2820 Gentofte, DK
(74) Roerboel, Leif, et al, Budde Schou A/S, Vester Søgade 10, 1601 Copenhagen V, DK

**(51) (8)** **EP 2337762** *
***B 67D 7/84***
***B 67D 1/08***
(30) EP 19.08.2008. 08388026
(86) PCT/EP2009060677 18.08.2009.
(96) EP 09807937.9 18.08.2009. En
(87) WO2010020644 25.02.2010. 201008
(97) EP 2337762 29.06.2011. 201126 En
**(54) A METHOD FOR INSTALLING A COLLAPSIBLE BEVERAGE CONTAINER IN A BEVERAGE DISTRIBUTION UNIT**

(71) Carlsberg Breweries A/S, Ny Carlsberg Vej 100, 1760 Copenhagen V, DK
(72) RASMUSSEN, Jan Nørager, Rytterbakken 22, DK-3650 Ølstykke, DK;
VESBORG, Steen, Dronningemarken 4, DK-2820 Gentofte, DK
(74) Nielsen, Henrik Sten, et al, Budde Schou A/S, Vester Søgade 10, 1601 Copenhagen V, DK

**(51) (8)** **EP 2342164 ***
***C 02F 1/66***
***C 02F 1/72***
***C 02F 9/00***
***C 02F 11/06***
***C 02F 101/20***
***C 02F 101/30***
(30) IT 28.09.2009. RM20090494
(86) PCT/IB2010002418 27.09.2010.
(96) EP 10793292.3 27.09.2010. It
(87) WO2011036550 31.03.2011. 201113
(97) EP 2342164 13.07.2011. 201128 En
**(54) PROCESS FOR THE DISPOSAL OF WASTES, PARTICULARLY OF SLUDGES DERIVING FROM WASTE WATER DEPURATION**
(71) Biolase S.p.A., Via San Primo 4, 20123 Milano, IT
(72) MONTEMURRO, Michele, Via Leopardi 26, I-00034 Colleferro (Roma), IT
(74) Bottero, Carlo, Bugnion S.p.A., Viale Lancetti 17, 20158 Milano, IT

**(51) (8)** **EP 2253600**
***C 04B 7/02***
***C 04B 28/00***
(96) EP 09160271.4 14.05.2009. En
(97) EP 2253600 24.11.2010. 201047 En
**(54) Portland limestone calcined clay cement**
(71) AALBORG PORTLAND A/S, Rordalsvej 44, 9220 Aalborg Ost, DK
(72) Herfort, Duncan, Kornblomstvej 1, DK-9520, Skørping, DK;
Damtoft, Jesper Sand, Skovtoften 10, DK-9000, Aalborg, DK
(74) Kitchen, Steven Richard, Chas. Hude A/S, H.C. Andersens Boulevard 33, 1780 Copenhagen V, DK

**(51) (8)** **EP 2334614 ***
***C 04B 18/02***
***C 04B 28/04***
***C 04B 28/06***
***C 04B 28/14***
***C 04B 28/16***
(30) FR 17.10.2008. 0857052
(86) PCT/EP2009062593 29.09.2009.
(96) EP 09783532.6 29.09.2009. En
(87) WO2010043495 22.04.2010. 201016
(97) EP 2334614 22.06.2011. 201125 En
**(54) METHOD OF TREATING MARINE SEDIMENTS AND USE OF THE RESULTING SOLID PRODUCT IN MORTARS OR CONCRETES**
(71) Ciments Français, Tour Ariane, Quartier Villon, 5 place de la Pyramide, 92800 Puteaux, FR
(72) CASSAT, Pierre, 9 ruelle Cisey, F-28260 Le Mesnil Simon, FR;
MOUDILOU, Emmanuel, 17 allée Charles Meissonnier, F-78955 Carrieres Sous Poissy, FR;
LE ROLLAND, Bruno, 17 clos de Montcient, F-78250 Oinville Sur Montcient, FR
(74) Le Cloirec, Claudine, BREMA-LOYER, 9, Rue Edmé Mariotte, B.P. 70620, 44306 Nantes Cedex 3, FR

**(51) (8)** **EP 2334621 ***
***C 07B 59/00***
***C 07C 237/06***
(30) US 16.09.2008. 192218 P
(86) PCT/US2009057001 15.09.2009.
(96) EP 09792561.4 15.09.2009. En
(87) WO2010033511 25.03.2010. 201012
(97) EP 2334621 22.06.2011. 201125 En
**(54) DEUTERATED 2-AMINO-3-HYDROXYPROPANOIC ACID DERIVATIVES**
(71) CONCERT PHARMACEUTICALS, INC., 99 Hayden Street, Suite 500, Lexington MA 02421, US
(72) MASSE, Craig, 122 Hamilton Street, Apt. 2, Cambridge, Massachusetts 02139-4527, US
(74) Friede, Thomas, Bardehle Pagenberg, Galileiplatz 1, DE-81679 München, DE

**(51) (8)** **EP 2069284 ***
***C 07C 211/00***
***C 07D 413/04***
***C 07D 413/14***
(30) US 14.08.2006. 837567 P
US 10.07.2007. 959252 P
(86) PCT/US2007017796 10.08.2007.
(96) EP 07811251.3 10.08.2007. En
(87) WO2008021235 21.02.2008. 200808
(97) EP 2069284 17.06.2009. 200925 En
**(54) PROCESS AND INTERMEDIATES FOR THE SYNTHESIS OF 2-(QUINOLIN-5-YL)-4,5 DISUBSTITUTED-AZOLE DERIVATIVES**
(71) Schering Corporation, 2000 Galloping Hill Road, Kenilworth, NJ 07033, US
(72) CUTARELLI, Timothy, D., 23 Haver Farm Road, Clinton, NJ 08809, US;
FU, Xiaoyong, 18 Augusta Avenue, Edison, NJ 08820, US;
MCALLISTER, Timothy, L., 45 A2 Sandra Circle, Westfield, NJ 07090, US;
REEDER, Michael, R., 12 Seminole Road, Skillman, NJ 08558, US;
YIN, Jianguo, 11 Mahogany Court, Plainsboro, NJ 08536, US;
YONG, Kelvin, H., 601 Riverside Avenue, Unit 319, Lyndhurst, NJ 07071, US;
ZHANG, Shuyi, 1 Doric Avenue, Parsippany, NJ 07054, US
(74) Horgan, James Michael Frederic, et al, Merck & Co., Inc., European Patent Department, Hertford Road, Hoddesdon, EN11 9BU, GB

**(51) (8)** **EP 2331495 ***
***C 07C 231/08***
***C 07C 233/03***
(30) EP 08.08.2008. 08014215
US 08.08.2008. 188415 P
(86) PCT/EP2009005751 07.08.2009.
(96) EP 09777745.2 07.08.2009. En
(87) WO2010015415 11.02.2010. 201006
(97) EP 2331495 15.06.2011. 201124 En

**(54) PROCESS FOR MANUFACTURING ADAMANTANE DERIVATIVES WITH HIGH YIELD**
(71) Merz Pharma GmbH & Co. KGaA, Eckenheimer Landstrasse 100, 60318 Frankfurt am Main, DE
(72) GOLD, Markus-Rene, Hauptstrasse 13, 97753 Karlstadt, DE;
KOLLER, Herbert, Quellenstrasse 155A/65, A-1100 Wien, AT;
PYERIN, Michael, Enzersdorferstrasse 3/2/8, A-2345 Brunn am Gebirge, AT
(74) Ricker, Mathias, Wallinger Ricker Schlotter Foerstl, Patent- und Rechtsanwälte, Zweibrückenstrasse 5-7, 80331 München, DE

**(51) (8)** **EP 2323970 ***
***C 07C 233/79***
***C 07C 255/58***
***C 07C 311/39***
***C 07D 213/74***
***C 07D 213/75***
***C 07D 213/84***
***C 07D 277/42***
***A 61K 31/166***
***A 61K 31/427***
***A 61K 31/44***
***A 61P 1/00***
(30) EP 07.08.2008. 08162006
EP 14.01.2009. 09150543
US 14.01.2009. 205139 P
(86) PCT/EP2009060150 05.08.2009.
(96) EP 09804572.7 05.08.2009. En
(87) WO2010015655 11.02.2010. 201006
(97) EP 2323970 25.05.2011. 201121 En
**(54) CYCLOHEXYL AMIDE DERIVATIVES AND THEIR USE AS CRF-1 RECEPTOR ANTAGONISTS**
(71) Novartis AG, Lichtstrasse 35, 4056 Basel, CH
(72) BEATTIE, David, Novartis Horsham Research Centre, Wimblehurst Road, Horsham West Sussex RH12 5AB, GB;
COLSON, Anny-Odile, Novartis Horsham Research Centre, Wimblehurst Road, Horsham West Sussex RH12 5AB, GB;
CULSHAW, Andrew James, Novartis Horsham Research Centre, Wimblehurst Road, Horsham West Sussex RH12 5AB, GB;
ROONEY, Lisa, Novartis Horsham Research Centre, Wimblehurst Road, Horsham West Sussex RH12 5AB, GB;
STANLEY, Emily, Novartis Horsham Research Centre, Wimblehurst Road, Horsham West Sussex RH12 5AB, GB;
SVIRIDENKO, Lilya, Novartis Horsham Research Centre, Wimblehurst Road, Horsham West Sussex RH12 5AB, GB
(74) Mueller, Philippe, et al, Novartis Pharma AG, Patent Department, 4002 Basel, CH

**(51) (8)** **EP 2323972 ***
***C 07C 237/26***
***C 07C 239/20***
***C 07C 275/16***
***C 07C 275/42***
***C 07C 311/08***
***C 07C 311/21***
***C 07D 205/04***
***C 07D 207/08***
***C 07D 207/10***
***C 07D 207/12***
***C 07D 207/14***
***C 07D 207/16***
***C 07D 207/34***
***C 07D 209/44***
***C 07D 209/52***
(30) US 08.08.2008. 188307 P
(86) PCT/US2009053142 07.08.2009.
(96) EP 09791290.1 07.08.2009. En
(87) WO2010017470 11.02.2010. 201006
(97) EP 2323972 25.05.2011. 201121 En
**(54) C7-FLUORO SUBSTITUTED TETRACYCLINE COMPOUNDS**
(71) Tetraphase Pharmaceuticals, Inc., 480 Arsenal Street, Suite 110, Watertown, MA 02472, US
(72) ZHOU, Jingye, 14 Oxford Circle, Belmont, MA 02478, US;
XIAO, Xiao-Yi, 3851 Torrey Hill Lane, San Diego, CA 92130, US;
PLAMONDON, Louis, 65 Hamilton Road, Belmont, MA 02478, US;
HUNT, Diana, Katharine, 252 Pearl Street 2, Cambridge, MA 02139, US;
CLARK, Roger, B., 20 Richard Road, Lexington, MA 02421, US;
ZAHLER, Robert, B., 5 East Welling Avenue, Pennington, NJ 08534, US
(74) Snodin, Michael D., et al, Potter Clarkson LLP, Park View House, 58 The Ropewalk, Nottingham, NG1 5DD, GB

**(51) (8)** **EP 2251321**
***C 07C 245/08***
***C 07C 309/46***
(96) EP 09160233.4 14.05.2009. En
(97) EP 2251321 17.11.2010. 201046 En
**(54) Monoazo compounds**
(71) Clariant International Ltd., Rothausstrasse 61, 4132 Muttenz 1, CH
(72) Nusser, Rainer DR., Hoernle 1, 79395 Neuenburg, DE;
Geiger, Ulrich DR., Tullastrasse 5, 79395 Neuenburg/Rhein, DE;
Hasemann, Ludwig DR., Muehlenbachweg 4, 79379 Muellheim-Niederweiler, DE
(74) Jacobi, Carola, et al, Clariant Produkte (Deutschland) GmbH, Group Intellectual Property, Am Unisys-Park 1, 65843 Sulzbach, DE

**(51) (8)** **EP 2337777 ***
***C 07C 263/20***
***B 01D 3/00***
***C 07C 265/04***
***C 07C 265/14***
***B 01D 3/14***
(30) US 02.10.2008. 102128 P
US 02.10.2008. 102141 P
(86) PCT/US2009059241 01.10.2009.
(96) EP 09793249.5 01.10.2009. En
(87) WO2010039965 08.04.2010. 201014
(97) EP 2337777 29.06.2011. 201126 En
**(54) APPARATUS, SYSTEMS, AND METHODS FOR PURIFICATION OF ISOCYANATE MIXTURES**
(71) Dow Global Technologies LLC, 2040 Dow Center, Midland, MI 48674, US
(72) MERENOV, Andrei, S., 312 Huckleberry Drive, Lake Jackson, Texas 77566, US;
BALBO, Luca, 106 Majestic Oak Circle, Lake Jackson, Texas 77566, US;
STALLARD, Douglas, A., 120 Mistletoe Street, Lake Jackson, Texas 77566, US;
PENDERGAST, John, G., 60 Parsley Court, Lake Jackson, Texas 77566, US;
GEHRKE, Joerg-Peter, Ystadweg 7, 21682 Stade, DE;
COLLADO, Amilcar R., 102 Mallard Drive, Clute, Texas 77531, US;
HIBBITTS, David, D., 1010 Wertland Street, No.1A6, Charlottesville, Virginia 22903, US
(74) Chung, Hsu Min, Boult Wade Tennant, Verulam Gardens, 70 Gray's Inn Road, London WC1X 8BT, GB

**(51) (8)** **EP 2342176 ***
***C 07C 263/20***
***B 01D 3/00***
***C 07C 265/04***
***B 01D 3/14***
(30) US 02.10.2008. 102128 P
US 02.10.2008. 102141 P
(86) PCT/US2009059249 01.10.2009.
(96) EP 09793251.1 01.10.2009. En
(87) WO2010039972 08.04.2010. 201014
(97) EP 2342176 13.07.2011. 201128 En
**(54) APPARATUS, SYSTEMS, AND METHODS FOR PURIFICATION OF ISOCYANATE MIXTURES**
(71) Dow Global Technologies LLC, 2040 Dow Center, Midland, MI 48674, US
(72) MERENOV, Andrei, S., 312 Huckleberry Drive, Lake Jackson, Texas 77566, US;
BALBO, Luca, 106 Majestic Oak Circle, Lake Jackson, Texas 77566, US;
STALLARD, Douglas, A., 120 Mistletoe Street, Lake Jackson, Texas 77566, US;
PENDERGAST, John, G., 60 Parsley Court, Lake Jackson, Texas 77566, US;
GEHRKE, Joerg-Peter, Ystadweg 7, 21682 Stade, DE;
COLLADO, Amilcar, R., 102 Mallard Drive, Clute, Texas 77531, US;
HIBBITTS, David, D., 1010 Wertland Street, No.1A6, Charlottesville, Virginia 22903, US
(74) Chung, Hsu Min, Boult Wade Tennant, Verulam Gardens, 70 Gray's Inn Road, London WC1X 8BT, GB

**(51) (8)** **EP 2251324**
***C 07C 271/10***
***C 07D 215/04***
***C 07D 237/08***
***C 07D 233/54***
***C 07D 235/14***
***C 07D 263/32***
***C 07D 471/04***
***A 61P 29/00***
***A 61P 25/00***
(30) FR 26.02.2004. 0401949
EP 25.02.2005. 05732902
(96) EP 09172706.5 25.02.2005. Fr
(97) EP 2251324 17.11.2010. 201046 Fr
**(54) HETEROARYL-ALKYLCARBAMATE COMPOUNDS AND THEIR USE AS INHIBITORS OF THE FAAH ENZYME**
(71) Sanofi-Aventis, 174, Avenue de France, 75013 Paris, FR
(72) Abouabdellah, Ahmed, c/o sanofi-aventis, Département Brevets, 174 avenue de France, 75013, PARIS, FR;
Bartsch-Li, Régine, c/o sanofi-aventis, Département Brevets, 174 avenue de France, 75013, PARIS, FR;
Hoornaert, Christian, c/o sanofi-aventis, Département Brevets, 174 avenue de France, 75013, PARIS, FR;
Ravet, Antoine, c/o sanofi-aventis, Département Brevets, 174 avenue de France, 75013, PARIS, FR
(74) Tanty, François, et al, Nony & Associés, 3, rue de Penthivre, 75008 Paris, FR

**(51) (8)** **EP 2340242 ***
***C 07C 311/33***
***C 07C 311/08***
***C 07C 311/36***
***C 07C 237/20***
***A 61K 31/18***
***A 61K 31/167***
***A 61P 27/02***
(30) US 22.10.2008. 197081 P
US 22.10.2008. 197082 P
US 22.10.2008. 197083 P
US 22.10.2008. 197091 P
(86) PCT/US2009061545 21.10.2009.
(96) EP 09822658.2 21.10.2009. En
(87) WO2010048332 29.04.2010. 201017
(97) EP 2340242 06.07.2011. 201127 En
**(54) COMPOUNDS FOR TREATING OPHTHALMIC DISEASES AND DISORDERS**
(71) Acucela, Inc., 21720-23rd Drive SE, Suite 120, Bothell, WA 98021, US
(72) SCOTT, Ian L., 22906 111th Street Southeast, Monroe, Washington 98272, US;
KUKSA, Vladimir A., 16618 Juanita Drive NE, Apt. 201B, Kenmore, Washington 98028-6323, US;
HONG, Feng, 10042 Main Street, Apt 301, Bellevue, Washington 98004, US;
KUBOTA, Ryo, 5716 NE 56th Street, Seattle, Washington 98105, US;
GAGE, Jennifer, 15318 62nd Place NE, Kenmore, Washington 98028, US
(74) Sahans, Sarah Anne, et al, HLBBshaw, Merlin House, Falconry Court, Baker's Lane, Epping, Essex CM16 5DQ, GB

**(51) (8)** **EP 2253614**
***C 07D 207/06***
***C 07D 207/08***
***C 07D 207/09***
***C 07D 401/04***
***C 07D 401/12***
***C 07D 403/04***
***C 07D 403/12***
***C 07D 405/12***
***C 07D 409/12***
***C 07D 413/04***
***C 07D 413/14***
***C 07D 417/04***
***C 07D 471/04***
***C 07D 487/04***
***A 61K 31/40***
***A 61K 31/4025***
***A 61K 31/437***
***A 61K 31/55***
***A 61P 35/00***
(30) US 07.04.2004. 560186 P
(96) EP 10172398.9 06.04.2005. En
(97) EP 2253614 24.11.2010. 201047 En
**(54) Inhibitors of IAP**
(71) Novartis AG, Lichtstrasse 35, 4056 Basel, CH
(72) Palermo, Mark G., 45 Taggart Circle, Rindge, NH 03461, US;
Sharma, Sushil Kumar, 9 Bakley Terrace, West Orange, NJ 07052, US;
Straub, Christopher Sean, 16 Hertiage Lane, Stow, MA 01775, US;
Wang, Rung-Ming David, 167 Cherry Street, Cambridge, MA 02139, US;
Zawel, Leigh, Novartis Institutes for BioMedical Research, Inc., 250 Massachussetts Avenue, Cambridge, MA 02139, US;
Zhang, Yanlin, 36 Munroe Street, Apt. B1, Somerville, MA 02143, US;
Chen, Zhuoliang, Novartis Institutes for BioMedical Research, Inc., 250 Massachussetts Avenue, Cambridge, MA 02139, US;
Wang, Yaping, 96 Patch Hill, Boxborough, MA 01719, US;
Yang, Fan, 70 Peach Orchard Road, Burlington, MA 01803, US;
Wrona, Wojciech, Novartis Institutes for BioMedical Research, Inc., 250 Massachussetts Avenue, Cambridge, MA 02139, US;
Liu, Gang, Novartis Institutes for BioMedical Research, Inc., 250 Massachussetts Avenue, Cambridge, MA 02139, US;
Charest, Mark G., Great Point Partners LLC, 165 Mason Street, 3rd Floor, Greenwich, CT 06830, US;
He, Feng, Novartis Insts. for BioMedical Research Co., Ltd., No 8 Building, Lane 898 Halei Road, Zhangjiang Hi-Tech Park, Pudong New Area, 201203, Shanghai, CN
(74) Strang, Andrea Josephine, Novartis Pharma AG, Patent Department, Postfach, 4002 Basel, CH

**(51) (8)** **EP 2121604 ***
***C 07D 209/52***
(30) US 15.12.2006. 875195 P
(86) PCT/US2007025520 13.12.2007.
(96) EP 07862880.7 13.12.2007. En
(87) WO2008076316 26.06.2008. 200826
(97) EP 2121604 25.11.2009. 200948 En
**(54) BISULFITE PURIFICATION OF AN ALPHA-KETO AMIDE**
(71) Schering Corporation, 2000 Galloping Hill Road, Kenilworth, NJ 07033, US
(72) WONG, George S. K., 61 Hawthorne Place, Summit, New Jersey 07901, US;
PARK, Jeonghan, 138 Sunrise Drive, Whippany, New Jersey 07981, US;
IWAMA, Tetsuo, 545 School Place, Scotch Plains, New Jersey 07076, US;
SUDHAKAR, Anantha R., 42356 Troyer Avenue, Fremont, California 94539, US
(74) Horgan, James Michael Frederic, et al, Merck & Co., Inc., European Patent Department, Hertford Road, Hoddesdon, EN11 9BU, GB

**(51) (8)** **EP 2326621 ***
***C 07D 209/70***
***C 07D 209/88***
***C 07D 401/12***
***C 07D 403/12***
***C 07D 417/12***
***A 61P 37/00***
***A 61K 31/403***
(30) US 23.07.2008. 135672 P
US 06.03.2009. 209374 P
(86) PCT/US2009004265 22.07.2009.
(96) EP 09788983.6 22.07.2009. En
(87) WO2010011316 28.01.2010. 201004
(97) EP 2326621 01.06.2011. 201122 En
**(54) SUBSTITUTED 1,2,3,4-TETRAHYDROCYCLOPENTA[b]INDOL-3-YL) ACETIC ACID DERIVATIVES USEFUL IN THE TREATMENT OF AUTOIMMUNE AND INFLAMMATORY DISORDERS**
(71) Arena Pharmaceuticals, Inc., 6166 Nancy Ridge Drive, San Diego, CA 92121-3223, US
(72) JONES, Robert M., 10937 Corte luz del Sol, San Diego, California 92130, US;
BUZARD, Daniel J., 14494 Janal Way, San Diego, California 92129, US;
HAN, Sangdon, 9953 Fieldthorn Street, San Diego, California 92127, US;
KIM, Sun Hee, 8936 Revelstoke Way, San Diego, California 92126, US;
LEHMANN, Juerg, 9840 La Tortola Ct., San Diego, California 92129, US;
ULLMAN, Brett, 3046 40th Street, San Diego, California 92105, US;
MOODY, Jeanne V., 5264 Bloch Street, San Diego, California 92122, US;
ZHU, Xiuwen, 11367 Black Colt Lane, San Diego, California 92130, US;
STIRN, Scott, 14710 Carmel Ridge Road, San Diego, California 92128, US
(74) Wytenburg, Wilhelmus Johannes, et al, Mewburn Ellis LLP, 33 Gutter Lane, London, EC2V 8AS, GB

**(51) (8)** **EP 2328868 ***
***C 07D 211/46***
***A 61K 31/445***
***A 61P 13/00***
(30) US 15.07.2008. 80726 P

(86) PCT/IB2009052859 01.07.2009.
(96) EP 09786495.3 01.07.2009. En
(87) WO2010007552 21.01.2010. 201003
(97) EP 2328868 08.06.2011. 201123 En
**(54) NOVEL COMPOUNDS ACTIVE AS MUSCARINIC RECEPTOR ANTAGONISTS**
(71) Pfizer Limited, Pfizer Global Research and Development, Ramsgate Road, Sandwich, Kent CT13 9NJ, GB
(72) GLOSSOP, Paul Alan, Pfizer Global Research and Development, Ramsgate Road, Sandwich Kent CT13 9NJ, GB; LANE, Charlotte Alice Louise, Pfizer Global Research and Development, Ramsgate Road, Sandwich Kent CT13 9NJ, GB
(74) Laurent, Claire, Pfizer Limited, European Patent Department, Ramsgate Road, Sandwich, Kent CT13 9NJ, GB

**(51) (8)** **EP 2137152 ***
***C 07D 211/62***
***C 07D 401/06***
***C 07D 401/12***
***C 07D 417/12***
***A 61K 31/165***
***A 61K 31/445***
***A 61P 1/00***
***A 61P 1/06***
(30) KR 16.03.2007. 20070025952
(86) PCT/KR2008001465 14.03.2008.
(96) EP 08723502.4 14.03.2008. En
(87) WO2008114971 25.09.2008. 200839
(97) EP 2137152 30.12.2009. 200953 En
**(54) NOVEL BENZAMIDE DERIVATIVES AND PROCESS FOR THE PREPARATION THEREOF**
(71) Dong-A Pharm.Co., Ltd., 252 Yongdu-dong, Dongdaemun-gu, Seoul 130-823, KR
(72) YOO, Moo-Hi, 5-801 Woosung 3cha Apt., Gaepo1-dong, Gangnam-gu, Seoul 135-807, KR;
RHEE, Jae-Keol, 102-701, Hankook 1cha Apt., Maetan2-dong, Yeongtong-gu, Suwon-si, Gyeonggi-do 443-712, KR;
IM, Weon-Bin, 105-702, Hyundai I-Park, Jukjeon1-dong, Suji-gu, Yongin-si, Gyeonggi-do 448-161, KR;
CHOI, Sung-Hak, 524-203, Hanyang Apt., Yangjimaeul, Sunae-dong, Bundang-gu, Seongnam-si, Gyeonggi-do 463-922, KR;
KIM, Eun-Jung, 202 Dongwon Apt., 352-11 Yangjae-dong, Seocho-gu, Seoul 137-130, KR;
PARK, Jung-Sang, 523-1104 Shinsung Apt., 963-2 Yeongtong-dong, Yeongtong-gu, Suwon-si, Gyeonggi-do 443-811, KR;
CHOI, Sun-Ho, 301 Daehwa Jutaek, 199-29 Macheon2-dong, Songpa-gu, Seoul 138-819, KR;
SHON, Tae-Kyoung, 210-403, Doosan Apt., Bongcheonbon-dong, Gwanak-gu, Seoul 151-782, KR;
SUNG, Hyun-Jung, 136-2003, Hanil Town, Jowon-dong, Jangan-gu, Suwon-si, Gyeonggi-do 440-709, KR;
KIM, Ja-Young, 102, 1507-58, Seocho3-dong, Seocho-gu, Seoul 137-870, KR;
SHON, Ju-Hee, 181-92 Doksan-dong, Geumcheon-gu, Seoul 150-010, KR
(74) Pohlman, Sandra M., et al, df-mp, Fünf Höfe, Theatinerstrasse 16, 80333 München, DE

**(51) (8)** **EP 2328869 ***
***C 07D 211/80***
***C 07D 213/02***
***C 07D 401/12***
***A 61K 31/4418***
***A 61P 9/02***
***A 61P 11/00***
(30) US 29.09.2008. 101074 P
(86) PCT/US2009058655 28.09.2009.
(96) EP 09817014.5 28.09.2009. En
(87) WO2010037054 01.04.2010. 201013
(97) EP 2328869 08.06.2011. 201123 En
**(54) HETEROARYL ANTAGONISTS OF PROSTAGLANDIN D2 RECEPTORS**
(71) Amira Pharmaceuticals, Inc., 9535 Waples Street, Suite 100, San Diego, CA 92121, US
(72) HUTCHINSON, John, Howard, 3435 Richmond Street, San Diego, CA 92103, US;
STEARNS, Brian, Andrew, 157 Beechtree Drive, Encinitas, CA 92024, US;
STOCK, Nicholas, Simon, 7087 Camino De Grazia, No 150, San Diego, California 92111, US;
TRUONG, Yen, Pham, 12939 Calle De Las Rosas, San Diego, California 92129, US;
ROPPE, Jeffrey, Roger, 32182 Camino Guarda, Temecula, California 92592, US;
VOLKOTS, Deborah, 8860 Villa La Jolla DR. 111, La Jolla, CA 92037, US;
SCOTT, Jill, Melissa, 10961 Creekbridge Place, San Diego, CA 92128, US;
PARR, Timothy, 8504 Lemon Avenue, La Mesa, California 91941, US
(74) Sahans, Sarah Anne, et al, HLBBshaw, Merlin House, Falconry Court, Baker's Lane, Epping, Essex CM16 5DQ, GB

**(51) (8)** **EP 2272831**
***C 07D 213/46***
(96) EP 09163878.3 26.06.2009. En
(97) EP 2272831 12.01.2011. 201102 En
**(54) Process for the preparation of arylpyridinyl compounds**
(71) Prime European Therapeuticals S.p.A., Via Filippo Turati, 7, 20121 Milano, IT
(72) Scrocchi, Roberto, Via Madonnina, 35, 27100, PAVIA, IT;
Fedeli, Palma, Via F.J. Kennedy, 5/2, 26856, SENNA LODIGIANA (LODI), IT;
Argese, Maria, Via Raffaello Sanzio, 17, 20018, SEDRIANO (MI), IT;
Guazzi, Giuseppe, P.zza Leonardo da Vinci, 9, 20133, MILANO, IT
(74) Minoja, Fabrizio, Bianchetti Bracco Minoja S.r.l., Via Plinio, 63, 20129 Milano, IT

**(51) (8)** **EP 2099760** *
***C 07D 215/22***
***C 07D 401/06***
***C 07D 401/10***
***C 07D 405/06***
***C 07D 405/10***
***C 07D 409/10***
***A 61K 31/435***
***A 61P 31/00***
(30) EP 06.12.2006. 06125510
(86) PCT/EP2007063314 04.12.2007.
(96) EP 07847812.0 04.12.2007. En
(87) WO2008068268 12.06.2008. 200824
(97) EP 2099760 16.09.2009. 200938 En
**(54) ANTIBACTERIAL QUINOLINE DERIVATIVES**
(71) Janssen Pharmaceutica NV, Turnhoutseweg 30, 2340 Beerse, BE
(72) GUILLEMONT, Jérôme Emile Georges, Johnson & Johnson, Pharmaceutical Research and Development, A division of Janssen-Cilag, Campus de Maigremont BP615, 27106 Val De Reuil Cedex, FR;
DORANGE, Ismet, Sickla alle 21, 13165 Nacka, SE;
MOTTE, Magali Madeleine Simone, Johnson & Johnson, Pharmaceutical Research and Development, A division of Janssen-Cilag, Campus de Maigremont BP615, 27106 Val De Reuil Cedex, FR;
ANDRIES, Koenraad Jozef Lodewijk Marcel, Janssen Pharmaceutica N.V., Turnhoutseweg 30, 2340 Beerse, BE;
KOUL, Anil, Janssen Pharmaceutica N.V., Turnhoutseweg 30, 2340 Beerse, BE
(74) Vervoort, Liesbeth, et al, Janssen Pharmaceutica N.V., Turnhoutseweg 30, 2340 Beerse, BE

**(51) (8)** **EP 2137155** *
***C 07D 215/52***
***A 61K 31/47***
***A 61P 1/00***
***A 61P 11/00***
***A 61P 15/00***
***A 61P 25/00***
***A 61P 35/00***
(30) US 19.03.2007. 895581 P
(86) PCT/SE2008050299 18.03.2008.
(96) EP 08724246.7 18.03.2008. En
(87) WO2008115140 25.09.2008. 200839
(97) EP 2137155 30.12.2009. 200953 En
**(54) QUINOLINE DERIVATIVES, PHARMACEUTICAL COMPOSITIONS COMPRISING THEM, AND THEIR USE IN TREATING CENTRAL NERVOUS SYSTEM AND PERIPHERAL DISEASES**
(71) AstraZeneca AB, 151 85 Södertälje, SE
(72) KANG, James, AstraZeneca Wilmington, 1800 Concord Pike, P.O. Box 15437, Wilmington, Delaware 19850-5437, US;
MCCAULEY, John, P., AstraZeneca Wilmington, 1800 Concord Pike, P.O. Box 15437, Wilmington, Delaware 19850-5437, US;
SIMPSON, Thomas, R., AstraZeneca Wilmington, 1800 Concord Pike, P.O. Box 15437, Wilmington, Delaware 19850-5437, US

**(51) (8)** **EP 2337779** *
***C 07D 215/58***
***C 07D 215/227***
***A 61K 31/47***
***A 61K 31/198***
***A 61P 37/08***
(30) US 03.09.2008. 93943 P
(86) PCT/US2009055692 02.09.2009.
(96) EP 09812145.2 02.09.2009. En
(87) WO2010028015 11.03.2010. 201010
(97) EP 2337779 29.06.2011. 201126 En
**(54) 2-OXO-1,2-DIHYDRO-QUINOLINE MODULATORS OF IMMUNE FUNCTION**
(71) Teva Pharmaceutical Industries Ltd., 5 Basel Street, P.O. Box 3190, 49131 Petach-Tikva, IL
(72) GANT, Thomas, G., 1261 Liberty Way, Suite C, Vista, CA 92081, US;
SHAHBAZ, Manouchehr, M., 1261 Liberty Way, Suite C, Vista, CA 92081, US
(74) Nachshen, Neil Jacob, D Young & Co LLP, 120 Holborn, London EC1N 2DY, GB

**(51) (8)** **EP 2125743** *
***C 07D 217/20***
***C 07B 57/00***
(30) US 26.03.2007. 908088 P
(86) PCT/IL2008000291 05.03.2008.
(96) EP 08719916.2 05.03.2008. En
(87) WO2008117271 02.10.2008. 200840
(97) EP 2125743 02.12.2009. 200949 En
**(54) (1R,1'R)-ATRACURIUM SALTS SEPARATION PROCESS**
(71) Chemagis Ltd., 29 Lehi Street, 51200 Bnei Brak, IL
(72) OSTROVSKY, Elena, 9/12 Horovitz Street, 75233 Rishon Le-zion, IL;
ARAD, Oded, 49 Hanassi Harishon Street, 76303 Rehovot, IL
(74) Modiano, Micaela Nadia, et al, Modiano & Partners, Thierschstrasse 11, 80538 München, DE

**(51) (8)** **EP 2132181** *
***C 07D 217/20***
***C 07B 57/00***
(30) US 18.06.2007. 944597 P
(86) PCT/IL2008000290 05.03.2008.
(96) EP 08719915.4 05.03.2008. En
(87) WO2008155752 24.12.2008. 200852
(97) EP 2132181 16.12.2009. 200951 En
**(54) (1R,1'R)-ATRACURIUM SALTS SEPARATION PROCESS**
(71) Chemagis Ltd., 29 Lehi Street, 51200 Bnei Brak, IL
(72) ARAD, Oded, 49 Hanassi Harishon Street, 76303 Rehovot, IL;
OSTROVSKY, Elena, 9/12 Horovitz Street, 75233 Rishon Le-zion, IL
(74) Modiano, Micaela Nadia, et al, Modiano & Partners, Thierschstrasse 11, 80538 München, DE

**(51) (8)** **EP 2342182 ***
***C 07D 217/26***
***C 07D 401/06***
***C 07D 403/06***
***C 07D 407/04***
***A 61K 31/472***
***A 61P 25/18***
(30) DK 15.09.2008. 200801290
DK 06.01.2009. 200900010
(86) PCT/DK2009050237 11.09.2009.
(96) EP 09776285.0 11.09.2009. En
(87) WO2010028655 18.03.2010. 201011
(97) EP 2342182 13.07.2011. 201128 En
**(54) ISOQUINOLINONE DERIVATIVES AS NK3 ANTAGONISTS**
(71) H. Lundbeck A/S, Ottiliavej 9, 2500 Valby, DK
(72) KHANZHIN, Nikolay, Teglgårdsvej 545 2. tv, DK-3050 Humlebæk, DK;
JUHL, Karsten, Brydeholm 56, DK-2670 Greve, DK;
NIELSEN, Søren, Møller, Zmosevej 15, DK-3400 Hillerød, DK;
SIMONSEN, Klaus, Bæk, Læssøegade 75, DK-5230 Odense M, DK
(74) Conrad, Lars Sparre, et al, H. Lundbeck A/S, Corporate Patents and Trademarks, Ottiliavej 9, 2500 Valby-Copenhagen, DK

**(51) (8)** **EP 2326625 ***
***C 07D 223/16***
***C 07D 401/06***
***C 07D 401/12***
***C 07D 401/14***
***C 07D 403/12***
***C 07D 405/12***
***C 07D 405/14***
***C 07D 409/12***
***C 07D 409/14***
***C 07D 413/12***
***C 07D 417/12***
***A 61K 31/55***
***A 61P 25/18***
(30) GB 18.07.2008. 0813254
GB 26.03.2009. 0905231
(86) PCT/GB2009001774 17.07.2009.
(96) EP 09784728.9 17.07.2009. En
(87) WO2010007382 21.01.2010. 201003
(97) EP 2326625 01.06.2011. 201122 En
**(54) BENZAZEPINE DERIVATIVES AND THEIR USE AS HSTAMINE H3 ANTAGONISTS**
(71) Takeda Pharmaceutical Company Limited, 1-1 Doshomachi 4-chome, Chuo-ku, Osaka-shi, Osaka 541-0045, JP
(72) POONI, Parminder, Kaur, Takeda Cambridge Ltd, 418 Cambridge Science Park, Cambridge CB4 0PA, GB;
MERCHANT, Kevin, John, Takeda Cambridge Ltd, 418 Cambridge Science Park, Cambridge CB4 0PA, GB;
KERR, Catrina, Morvern, Takeda Cambridge Ltd, 418 Cambridge Science Park, Cambridge CB4 0PA, GB;
CROSBY, Stuart, Richard, Takeda Cambridge Ltd, 418 Cambridge Science Park, Cambridge CB4 0PA, GB;
OKAWA, Tomohiro, Takeda Pharmaceutical Company Limited, 17-85 Jusohonmachi 2-chome, Yodogawa-ku, Osaka-shi, Osaka 532-8686, JP;
SASAKI, Mitsuru, Takeda Pharmaceutical Company Limited, 17-85 Jusohonmachi 2-chome, Yodogawa-ku, Osaka-shi, Osaka 532-8686, JP;
GOTOU, Mika, Takeda Pharmaceutical Company Limited, 17-85 Jusohonmachi 2-chome, Yodogawa-ku, Osaka-shi, Osaka 532-8686, JP;
SHOWELL, Graham, Andrew, Takeda Cambridge Ltd, 418 Cambridge Science Park, Cambridge CB4 0PA, GB;
TEALL, Martin, Richard, Takeda Cambridge Ltd, 418 Cambridge Science Park, Cambridge CB4 0PA, GB
(74) Jones, Nicholas Andrew, Withers & Rogers LLP, Goldings House, 2 Hays Lane, London, SE1 2HW, GB

**(51) (8)** **EP 2328872 ***
***C 07D 231/14***
***A 61K 31/496***
***A 61P 35/00***
(30) US 19.06.2008. 73883 P
(86) PCT/GB2009050684 17.06.2009.
(96) EP 09766153.2 17.06.2009. En
(87) WO2009153592 23.12.2009. 200952
(97) EP 2328872 08.06.2011. 201123 En
**(54) PYRAZOLE COMPOUNDS 436**
(71) AstraZeneca AB, 151 85 Södertälje, SE
(72) BUTTAR, David, AstraZeneca R&D Alderley, Alderley Park, Macclesfield Cheshire SK10 4TG, GB;
THEOCLITOU, Maria-Elena, AstraZeneca R&D Alderley, Alderley Park, Macclesfield Cheshire SK10 4TG, GB;
THOMAS, Andrew, Peter, AstraZeneca R&D Alderley, Alderley Park, Macclesfield Cheshire SK10 4TG, GB

**(51) (8)** **EP 2334646 ***
***C 07D 231/40***
***C 07D 403/12***
***C 07D 405/12***
***C 07D 405/14***
***C 07D 409/14***
***C 07D 413/12***
***C 07D 413/14***
(30) US 16.09.2008. 97378 P
US 09.07.2009. 224200 P
(86) PCT/US2009057088 16.09.2009.
(96) EP 09792591.1 16.09.2009. En
(87) WO2010033543 25.03.2010. 201012
(97) EP 2334646 22.06.2011. 201125 En
**(54) SUBSTITUTED BENZAMIDES AS CANNABINOID RECEPTOR LIGANDS**
(71) Abbott Laboratories, 100 Abbott Park Road, Abbott Park, Illinois 60064, US
(72) CARROLL, William, 2325 Ridgeway Avenue, Evanston, Illinois 60201, US;
DART, Michael J., 844 Yale Lane, Highland Park, Illinois 60035, US;
FROST, Jennifer M., 343 Stevens Court, Grayslake, Illinois 60030, US;
LATSHAW, Steven P., 2237 Quaker Hollow Lane, Round Lake Beach, Illinois 60073, US;
KOLASA, Teodozyj, 118 Walden Lane, Lake Villa, Illinois 60046, US;
LI, Tongmei, 12877 Sanctuary Lane, Lake Bluff, Illinois 60044, US;
PEDDI, Sridhar, 1041 Manchester Circle, Grayslake, Illinois 60030, US;

LIU, Bo, 4529 West Tucker Lane, Waukegan, Illinois 60085, US;
PEREZ-MEDRANO, Arturo, 7 Windjammer Court, Grayslake, Illinois 60030, US;
PATEL, Meena, 31183 Prairie Road, Green Oaks, Illinois 60048, US;
WANG, Xueqing, 811 Chicago Avenue, Evanston, Illinois 60202, US;
NELSON, Derek W., 640 Broadview Avenue, Highland Park, Illinois 60035, US
(74) Modiano, Micaela Nadia, et al, Modiano & Partners, Thierschstrasse 11, 80538 München, DE

**(51) (8)** **EP 2114895 ***
***C 07D 233/00***
***C 07D 403/00***
(30) US 17.10.2006. 851989 P
(86) PCT/US2007081685 17.10.2007.
(96) EP 07854136.4 17.10.2007. En
(87) WO2008049027 24.04.2008. 200817
(97) EP 2114895 11.11.2009. 200946 En
**(54) TALARAZOLE METABOLITES**
(71) STIEFEL LABORATORIES, INC., 255 Alhambra Circle, Coral Gables, FL 33134, US
(72) BARRETT, Debra, 600 College Road East, Suite 3200, Princeton, NJ 08540, US
(74) Zeuthen-Aagaard, Henrik, Chas. Hude A/S, 33 H.C. Andersens Boulevard, 1780 Copenhagen V, DK

**(51) (8)** **EP 2328874 ***
***C 07D 233/42***
***C 07D 233/30***
***A 61K 31/44***
***A 61P 3/00***
(30) US 04.09.2008. 94388 P
US 20.05.2009. 180110 P
(86) PCT/US2009055947 03.09.2009.
(96) EP 09812245.0 03.09.2009. En
(87) WO2010028189 11.03.2010. 201010
(97) EP 2328874 08.06.2011. 201123 En
**(54) COMPOUNDS, COMPOSITIONS AND METHODS OF USING SAME FOR MODULATING URIC ACID LEVELS**
(71) Ardea Biosciences, Inc., 4939 Directors Place, San Diego, CA 92121, US
(72) GUNIC, Esmir, 8952 Capcano Rd., San Diego, California 92129, US;
GIRARDET, Jean-Luc, 16763 Santa Corina Court, San Diego, California 92127, US;
PAISNER, David A., 118 Jupiter St 1, Encinitas, California 92024, US
(74) Sahans, Sarah Anne, et al, HLBBshaw, HLBBshaw Ltd, Merlin House, Falconry Court, Baker's Lane, Epping, Essex CM16 5DQ, GB

**(51) (8)** **EP 2323992 ***
***C 07D 239/48***
***C 07D 401/04***
***C 07D 401/06***
***C 07D 403/06***
***C 07D 403/14***
***C 07D 409/06***
***C 07D 413/14***
***A 61K 31/495***
(30) EP 29.07.2008. 08161369
(86) PCT/EP2009059763 28.07.2009.
(96) EP 09781207.7 28.07.2009. En
(87) WO2010012740 04.02.2010. 201005
(97) EP 2323992 25.05.2011. 201121 En
**(54) 5-ALKYNYL-PYRIMIDINES**
(71) Boehringer Ingelheim International GmbH, Binger Strasse 173, 55216 Ingelheim am Rhein, DE
(72) WUNBERG, Tobias, Boehringer Ingelheim GmbH, CD Patents, Binger Strasse 173, 55216 Ingelheim am Rhein, DE;
BRUECKNER, Ralph, Boehringer Ingelheim GmbH, CD Patents, Binger Strasse 173, 55216 Ingelheim am Rhein, DE;
KESSLER, Dirk, Boehringer Ingelheim GmbH, CD Patents, Binger Strasse 173, 55216 Ingelheim am Rhein, DE;
KRAEMER, Oliver, Boehringer Ingelheim GmbH, CD Patents, Binger Strasse 173, 55216 Ingelheim am Rhein, DE;
McCONNELL, Darryl, Boehringer Ingelheim GmbH, CD Patents, Binger Strasse 173, 55216 Ingelheim am Rhein, DE;
SCHNEIDER, Siegfried, Boehringer Ingelheim GmbH, CD Patents, Binger Strasse 173, 55216 Ingelheim am Rhein, DE;
van der VEEN, Lars, Boehringer Ingelheim GmbH, CD Patents, Binger Strasse 173, 55216 Ingelheim am Rhein, DE
(74) Hammann, Heinz, et al, Boehringer Ingelheim GmbH, CD-Patents, Binger Straße 173, 55216 Ingelheim am Rhein, DE

**(51) (8)** **EP 2343283**
***C 07D 239/52***
***A 01N 43/54***
***A 01P 13/02***
(30) JP 17.10.2008. 2008268311
(86) PCT/JP2009005174 06.10.2009.
(96) EP 09820394.6 06.10.2009. Ja
(87) WO2010044215 22.04.2010. 201016
(97) EP 2343283 13.07.2011. 201128 En
**(54) OPTICALLY ACTIVE DIFLUOROMETHANESULFONANILIDE DERIVATIVE AND HERBICIDE**
(71) Kumiai Chemical Industry CO., LTD., 4-26, Ikenohata 1-chome, Taito-ku, Tokyo 110-0008, JP;
IHARA CHEMICAL INDUSTRY CO., LTD., 4-26, Ikenohata 1-chome, Taito-ku, Tokyo 110-0008, JP
(72) INOUE, Jun, c/o K.I CHEMICAL RESEACH INSTITUTE CO. LTD., 408-1, Shioshinden, Iwata-shi, Shizuoka 437-1213, JP;
KAWASAKI, Hiroshi, c/o KUMIAI CHEMICAL INDUSTRY CO. LTD., 4-26, Ikenohata 1-chome, Taito-ku, Tokyo 110-0008, JP;
ASAKURA, Sohei, c/o KUMIAI CHEMICAL INDUSTRY CO. LTD., 4-26, Ikenohata 1-chome, Taito-ku, Tokyo 110-0008, JP
(74) Vossius & Partner, Siebertstrasse 4, 81675 München, DE

**(51) (8)** **EP 2331513** *
***C 07D 239/69***
***C 07D 239/38***
***C 07D 239/54***
(30) IN 12.08.2008. MU17052008
IN 12.03.2009. MU05372009
(86) PCT/IN2009000443 07.08.2009.
(96) EP 09764309.2 07.08.2009. En
(87) WO2010032261 25.03.2010. 201012
(97) EP 2331513 15.06.2011. 201124 En
**(54) PROCESS FOR PREPARATION OF BOSENTAN**
(71) Cadila Healthcare Limited, Zydus Tower, Satellite Cross Roads, Ahmedabad 380 015 Gujarat, IN
(72) SATA, Kaushilk, Cadila Healthcare Limited, Zydus Tower, Satellite Cross Roads, Ahmedabad 380 015 Gujarat, IN;
PANDEY, Bipin, Cadila Healthcare Limited, ZydusTower, Satellite Cross Roads, Ahmedabad 380 015 Gujarat, IN
(74) Srinivasan, Ravi Chandran, J.A. Kemp & Co., 14 South Square, Gray's Inn, London WC1R 5JJ, GB

**(51) (8)** **EP 2123641**
***C 07D 239/84***
(30) TW 16.02.2007. 96105966
PK 19.02.2007. 1652007
TH 19.02.2007. 75607
US 20.02.2007. 707904
WO 20.02.2007. PCT/JP2007/053066
JP 17.08.2007. 2007212910
US 17.08.2007. 956598 P
(86) PCT/JP2008052448 14.02.2008.
(96) EP 08711290.0 14.02.2008. Ja
(87) WO2008099887 21.08.2008. 200834
(97) EP 2123641 25.11.2009. 200948 En
**(54) CRYSTAL, AMORPHOUS FORM AND SALT OF METHYL N-[3-(6,7-DIMETHOXY- 2-METHYLAMINOQUINAZOLIN-4-YL)PHENYL]TEREPHTHALAMIC ACID**
(71) Eisai R&D Management Co., Ltd., 6-10, Koishikawa 4-chome, Bunkyo-ku, Tokyo 112-8088, JP
(72) YAMAMOTO, Eiichi, c/o EISAI CO. LTD., Tsukuba Research Laboratories, 1-3 Tokodai 5-chome, Tsukuba-shi, Ibaraki 300-2635, JP;
ASANO, Osamu, c/o EISAI CO. LTD., Tsukuba Research Laboratories, 1-3 Tokodai 5-chome, Tsukuba-shi, Ibaraki 300-2635, JP;
NIIJIMA, Jun, c/o EISAI CO. LTD., Tsukuba Research Laboratories, 1-3 Tokodai 5-chome, Tsukuba-shi, Ibaraki 300-2635, JP;
NARA, Kazumasa, c/o EISAI CO. LTD., Tsukuba Research Laboratories, 1-3 Tokodai 5-chome, Tsukuba-shi, Ibaraki 300-2635, JP;
MIYAZAKI, Kazuki, c/o Eisai R&D Management Co. Ltd., 6-10 Koishikawa 4-chome, Bunkyo-ku, Tokyo 112-8088, JP
(74) HOFFMANN EITLE, Patent- und Rechtsanwälte, Arabellastraße 4, 81925 München, DE

**(51) (8)** **EP 2094672** *
***C 07D 239/94***
***A 61K 31/517***
***A 61P 43/00***
(30) US 15.11.2006. 859315 P
(86) PCT/US2007084873 15.11.2007.
(96) EP 07864478.8 15.11.2007. En
(87) WO2008061208 22.05.2008. 200821
(97) EP 2094672 02.09.2009. 200936 En
**(54) ARYLSULFONAMIDE COMPOUNDS**
(71) Genentech, Inc., 1 DNA Way, South San Francisco, CA 94080, US;
THE WALTER AND ELIZA HALL INSTITUTE OF MEDICAL, RESEARCH, 1G Royal Parade, Parkville, VIC 3050, AU
(72) BAELL, Jonathan Bayldon, 77 Hawker Street, Ivanhoe, Victoria 3079, AU;
LESSENE, Guillaume Laurent, 87 The Grove, Coburg, Victoria 3058, AU;
SLEEBS, Brad Edmund, 1/18G Purinuan Road, Reservoir, Victoria 3086, AU;
FAIRBROTHER, Wayne J., 1008 Toyon Drive, Burlingame, California 94010, US;
FLYGARE, John A., 1419 Vancouver Avenue, Burlingame, California 94010, US;
KOEHLER, Michael F.T., 516 Georgia Avenue, Palo Alto,California 94306, US
(74) Kiddle, Simon John, et al, Mewburn Ellis LLP, 33 Gutter Lane, London, EC2V 8AS, GB

**(51) (8)** **EP 2328877** *
***C 07D 241/40***
***C 07D 319/18***
***C 07D 335/04***
***C 07D 265/36***
***C 07D 279/16***
***A 61K 31/535***
***A 61P 21/00***
(30) US 13.05.2009. 177866 P
US 15.08.2008. 89443 P
(86) PCT/US2009053932 14.08.2009.
(96) EP 09807384.4 14.08.2009. En
(87) WO2010019911 18.02.2010. 201007
(97) EP 2328877 08.06.2011. 201123 En
**(54) 1,4-BENZOXAZINE COMPOUNDS AND DERIVATIVES THEREOF AS THERAPEUTIC DRUGS FOR THE TREATMENT OF NEURODEGENERATIVE CONDITIONS**
(71) Board of Regents, The University of Texas System, 201 West 7th Street, Austin, TX 78701, US;
SOUTHERN METHODIST UNIVERSITY, P.O. Box 750132, Dallas, TX 75275-0132, US
(72) D'MELLO, Santosh, R., 9218 Bill Browne Ln., Dallas, TX 75243, US;
BIEHL, Edward, A., 2925 Rosedale Ave., Dallas, TX 75205, US
(74) Chaillot, Genevive, et al, Cabinet Chaillot, 16-20 Avenue de l'Agent Sarre, B.P. 74, 92703 Colombes Cedex, FR

**(51) (8)** **EP 2328879** *
***C 07D 249/08***
***C 07D 249/12***
***C 07D 249/10***
***A 61K 31/4196***
***A 61P 9/10***
***A 61P 19/02***
(30) US 04.09.2008. 94388 P
US 26.11.2008. 324764
US 20.05.2009. 180110 P

(86) PCT/US2009055948 03.09.2009.
(96) EP 09812246.8 03.09.2009. En
(87) WO2010028190 11.03.2010. 201010
(97) EP 2328879 08.06.2011. 201123 En
**(54) COMPOUNDS, COMPOSITIONS AND METHODS OF USING SAME FOR MODULATING URIC ACID LEVELS**
(71) Ardea Biosciences, Inc., 4939 Directors Place, San Diego, CA 92121, US
(72) GUNIC, Esmir, 8952 Capcano Rd., San Diego, California 92129, US;
GIRARDET, Jean-Luc, 16763 Santa Corina Court, San Diego, California 92127, US;
VERNIER, Jean-Michel, 5150 Sea Mist Ct., San Diego, California 92121, US;
TEDDER, Martina E., 34392 Camino El Molino, Capistrano Beach, California 92624, US;
PAISNER, David A., 118 Jupiter St 1, Encinitas, California 92024, US
(74) Sahans, Sarah Anne, et al, HLBBshaw, HLBBshaw Ltd, Merlin House, Falconry Court, Baker's Lane, Epping, Essex CM16 5DQ, GB

**(51) (8)** **EP 2331515** *
***C 07D 261/02***
***C 07D 413/12***
***A 01N 43/80***
***A 61P 29/00***
(30) GB 22.08.2008. 0815437
GB 14.01.2009. 0900561
GB 20.03.2009. 0904868
GB 22.06.2009. 0910771
(86) PCT/EP2009059562 24.07.2009.
(96) EP 09781036.0 24.07.2009. En
(87) WO2010020521 25.02.2010. 201008
(97) EP 2331515 15.06.2011. 201124 En
**(54) INSCETICIDAL COMPOUNDS**
(71) Syngenta Participations AG, Schwarzwaldallee 215, 4058 Basel, CH;
Syngenta Limited, European Regional Centre, Priestley Road Surrey Research Park, Guildford, Surrey GU2 7YH, GB
(72) PITTERNA, Thomas, Syngenta Crop Protection Münchwilen AG, Schaffhauser Strasse, CH-4332 Stein, CH;
EL QACEMI, Myriem, Syngenta Crop Protection Münchwilen AG, Schaffhauser Strasse, CH-4332 Stein, CH;
BOBOSIK, Vladimir, Synkola Mlynska dolina (areal PvF UK), 84215 Bratislava, SK;
RENOLD, Peter, Syngenta Crop Protection Münchwilen AG, Schaffhauser Strasse, CH-4332 Stein, CH;
CASSAYRE, Jérôme, Yves, Syngenta Crop Protection Münchwilen AG, Schaffhauser Strasse, CH-4332 Stein, CH;
JUNG, Pierre, Joseph, Marcel., Syngenta Crop Protection Münchwilen AG, Schaffhauser Strasse, CH-4332 Stein, CH
(74) Thwaite, Jonathan Simon, Syngenta Crop Protection, Münchwilen AG, Intellectual Property Department, Schaffhauserstrasse, CH-4332 Stein, CH

**(51) (8)** **EP 2332927**
***C 07D 261/04***
***A 01N 43/80***
***A 01P 7/02***
***A 01P 7/04***
***C 07D 413/04***
***C 07D 413/06***
***C 07D 413/10***
(30) JP 18.09.2008. 2008239724
(86) PCT/JP2009004601 15.09.2009.
(96) EP 09814282.1 15.09.2009. Ja
(87) WO2010032437 25.03.2010. 201012
(97) EP 2332927 15.06.2011. 201124 En
**(54) NITROGEN-CONTAINING HETEROCYCLIC COMPOUND AND PEST CONTROL AGENT**
(71) Nippon Soda Co., Ltd., 2-1, Ohtemachi 2-chome, Chiyoda-ku, Tokyo 100-8165, JP
(72) IWATA, Jyun, c/o Odawara Research Center, Nippon Soda Co. Ltd., 345 Takada, Odawara-shi, Kanagawa 250-0280, JP;
KAWAGUCHI, Masahiro, c/o Odawara Research Center, Nippon Soda Co. Ltd., 345 Takada, Odawara-shi, Kanagawa 250-0280, JP
(74) Cabinet Plasseraud, 52, rue de la Victoire, 75440 Paris Cedex 09, FR

**(51) (8)** **EP 2330099**
***C 07D 265/30***
(30) JP 11.09.2008. 2008234066
(86) PCT/JP2009065792 10.09.2009.
(96) EP 09813105.5 10.09.2009. Ja
(87) WO2010029959 18.03.2010. 201011
(97) EP 2330099 08.06.2011. 201123 En
**(54) NOVEL SALT OF MORPHOLINE DERIVATIVE**
(71) Astellas Pharma Inc., 3-11, Nihonbashi-Honcho 2-chome, Chuo-ku, Tokyo 103-8411, JP
(72) KIKUCHI, Kazumi, c/o Astellas Pharma Inc., 3-11 Nihonbashi-Honcho 2-chome, Chuo-ku, Tokyo 103-8411, JP;
KURODA, Akio, c/o Astellas Pharma Inc., 3-11 Nihonbashi-Honcho 2-chome, Chuo-ku, Tokyo 103-8411, JP;
MIZOGUCHI, Ryo, c/o Astellas Pharma Inc., 3-11 Nihonbashi-Honcho 2-chome, Chuo-ku, Tokyo 103-8411, JP;
SAKAMOTO, Kenichirou, c/o Astellas Pharma Inc., 3-11 Nihonbashi-Honcho 2-chome, Chuo-ku, Tokyo 103-8411, JP;
TAKEGUCHI, Kazuhiro, c/o Astellas Pharma Inc., 3-11 Nihonbashi-Honcho 2-chome, Chuo-ku, Tokyo 103-8411, JP
(74) Albrecht, Thomas, Kraus & Weisert, Patent- und Rechtsanwälte, Thomas-Wimmer-Ring 15, 80539 München, DE

**(51) (8)** **EP 2326631** *
***C 07D 273/02***
***C 07D 209/04***
***C 07D 263/56***
***C 07D 249/18***
***A 61P 35/00***
(30) US 18.08.2008. 189327 P
(86) PCT/US2009004704 18.08.2009.
(96) EP 09808499.9 18.08.2009. En
(87) WO2010021693 25.02.2010. 201008
(97) EP 2326631 01.06.2011. 201122 En
**(54) MIF MODULATORS**

(71) Yale University, Two Whitney Avenue, New Haven, CT 06511, US
(72) JORGENSEN, William, 349 River Road, Deep River, CT 06417, US;
BUCALA, Richard, J., 22 Benenson Drive, Cos Cob, CT 06807, US
(74) Smyth, Gyles Darren, Marks & Clerk LLP, 90 Long Acre, London, WC2E 9RA, GB

**(51) (8)** **EP 2324002 ***
***C 07D 309/10***
***C 07D 309/08***
***A 61K 31/353***
***A 61P 3/10***
***A 61P 3/00***
(30) US 22.08.2008. 91248 P
(86) PCT/US2009054585 21.08.2009.
(96) EP 09808859.4 21.08.2009. En
(87) WO2010022313 25.02.2010. 201008
(97) EP 2324002 25.05.2011. 201121 En
**(54) PROCESSES FOR THE PREPARATION OF SGLT2 INHIBITORS**
(71) Theracos, Inc., 550 Del Rey Avenue, Sunnyvale, CA 94085-3528, US
(72) LIOU, Jason, 11836 Caneridge Road, San Diego, CA 92128, US;
WU, Yuelin, Room 502, No. 2169, Pudong South Road, Shanghai 201203, CN;
LI, Shengbin, Room 303, No. 28, 2000 Nong, Lingshan Road, Pudong District, Shanghai 200136, CN;
XU, Ge, Room 301, Building 36, No. 1155, Guang Lan Road, Zhang jiang Town, Pudong New District, Shanghai 201203, CN
(74) Campbell, Patrick John Henry, et al, J.A. Kemp & Co., 14 South Square, Gray's Inn, London WC1R 5JJ, GB

**(51) (8)** **EP 2342188 ***
***C 07D 311/22***
***A 61K 31/353***
***A 61P 3/10***
(30) US 29.09.2008. 194576 P
(86) PCT/US2009058862 29.09.2009.
(96) EP 09817054.1 29.09.2009. En
(87) WO2010037127 01.04.2010. 201013
(97) EP 2342188 13.07.2011. 201128 En
**(54) CHROMENONE ANALOGS AS SIRTUIN MODULATORS**
(71) Sirtris Pharmaceuticals, Inc., 200 Technology Square, Suite 300, Cambridge, MA 02139, US
(72) OALMANN, Christopher, C/o Sirtris Phamaceuticals Inc., 200 Technology Square, Suite 300, Cambridge, MA 02139, US;
PERNI, Robert, B., C/o Sirtris Phamaceuticals Inc., 200 Technology Square, Suite 300, Cambridge, MA 02139, US;
VU, Chi, B., C/o Sirtris Phamaceuticals Inc., 200 Technology Square, Suite 300, Cambridge, MA 02139, US
(74) Chapman, Paul Gilmour, et al, Marks & Clerk LLP, Aurora, 120 Bothwell Street, Glasgow G2 7JS, GB

**(51) (8)** **EP 2326635 ***
***C 07D 319/20***
***A 61K 31/357***
***A 61P 25/18***
***A 61P 25/24***
(30) US 22.07.2008. 82654 P
(86) PCT/US2009050745 15.07.2009.
(96) EP 09790493.2 15.07.2009. En
(87) WO2010011548 28.01.2010. 201004
(97) EP 2326635 01.06.2011. 201122 En
**(54) NOVEL SUBSTITUTED SULFAMIDE DERIVATIVES**
(71) Janssen Pharmaceutica, N.V., Turnhoutseweg 30, 2340 Beerse, BE
(72) MCCOMSEY, David, F., 1125 Victoria Road, Warminster, PA 18974, US;
PARKER, Michael, H., 3587 Gray Fox Drive, Chalfont, PA 18914, US
(74) Warner, James Alexander, Carpmaels & Ransford, One Southampton Row, GB-London WC1B 5HA, GB

**(51) (8)** **EP 2340246 ***
***C 07D 319/20***
(30) US 23.06.2008. 74783 P
(86) PCT/US2009048026 19.06.2009.
(96) EP 09798447.0 19.06.2009. En
(87) WO2010008776 21.01.2010. 201003
(97) EP 2340246 06.07.2011. 201127 En
**(54) CRYSTALLINE FORM OF (2S)-(-)-N-(6-CHLORO-2,3-DIHYDRO-BENZO[1,4]DIOXIN-2-YLMETHYL)-SULFAMIDE**
(71) Janssen Pharmaceutica, N.V., Turnhoutseweg 30, 2340 Beerse, BE
(72) MEHRMAN, Steven, J., 1468 Sunflower Court, Quakertown, PA 18951, US;
WU, Wenju, 922 Merritt Drive Apt. H, Hillsborough, NJ 08844, US
(74) Warner, James Alexander, Carpmaels & Ransford, One Southampton Row, London, WC1B 5HA, GB

**(51) (8)** **EP 2125777 ***
***C 07D 401/02***
***A 61K 31/47***
***C 07D 403/02***
***A 61K 31/517***
(30) US 14.03.2007. 894693 P
US 04.06.2007. 941699 P
US 23.02.2008. 36245
(86) PCT/US2008054817 24.02.2008.
(96) EP 08730590.0 24.02.2008. En
(87) WO2008112408 18.09.2008. 200838
(97) EP 2125777 02.12.2009. 200949 En
**(54) SPIRO SUBSTITUTED COMPOUNDS AS ANGIOGENESIS INHIBITORS**
(71) Advenchen Laboratories, LLC, 9135 Reseda Blvd, Ste 238, Northridge, CA 91324, US
(72) CHEN, Guoqing, Paul, 13687 Blue Ridge Way, Moorpark, CA 93021, US
(74) Minoja, Fabrizio, Bianchetti Bracco Minoja S.r.l., Via Plinio, 63, 20129 Milano, IT

**(51) (8)** **EP 2331522 ***
***C 07D 401/04***
***C 07D 413/14***
***C 07D 409/14***
***C 07D 401/14***
***C 07D 413/04***
***C 07D 451/02***
***A 61K 31/44***
***A 61P 25/28***
***A 61P 25/04***
(30) US 01.08.2008. 129956 P
(86) PCT/US2009004437 03.08.2009.
(96) EP 09802045.6 03.08.2009. En
(87) WO2010014257 04.02.2010. 201005
(97) EP 2331522 15.06.2011. 201124 En
**(54) TETRAHYDROPYRIDINYL AND DIHYDROPYRROLYL COMPOUNDS AND THE USE THEREOF**
(71) Purdue Pharma LP, One Stamford Forum, 201 Tresser Boulevard, Stamford, CT 06901-3431, US;
Shionogi Co., Ltd., 1-8, Doshomachi 3-chome, Chuo-ku, Osaka-shi, Osaka 541-0045, JP
(72) MIKAMIYAMA, Hidenori, 12-4, Sagisu 5-chome, Fukushima-ku, Osaka 553-0002, JP;
NI, Chiyou, 17 Harvard Circle, Princeton, NJ 08540, US;
SHAO, Bin, 23 Shelbourne Road, Richboro, PA 18954, US;
TAFESSE, Laykea, 11 Abbington Lane, Robbinsville, NJ 08691, US
(74) Vos, Derk, Maiwald Patentanwalts GmbH, Elisenhof, Elisenstraße 3, D-80335 München, DE

**(51) (8)** **EP 2331523 ***
***C 07D 401/04***
***C 07D 401/14***
***C 07D 409/14***
***C 07D 413/14***
***C 07D 417/14***
***C 07D 471/10***
***A 61K 31/4545***
***A 61K 31/5377***
***A 61K 31/454***
***A 61K 31/506***
***A 61K 31/438***
***A 61P 35/00***
(30) GB 06.10.2008. 0818241
(86) PCT/GB2009051319 06.10.2009.
(96) EP 09740521.1 06.10.2009. En
(87) WO2010041054 15.04.2010. 201015
(97) EP 2331523 15.06.2011. 201124 En
**(54) PYRIDINE AND PYRIMIDINE BASED COMPOUNDS AS WNT SIGNALING PATHWAY INHIBITORS FOR THE TREATMENT OF CANCER**
(71) Cancer Research Technology Limited, Angel Building, 407 St John Street, London, EC1V 4AD, GB
(72) McDONALD, Edward, Institute of Cancer Research, Cancer Therapeutics, Haddow Building, 15 Cotswold Road, Sutton SM2 5NG, GB;
BLAGG, Julian, Institute of Cancer Research, Cancer Therapeutics, Haddow Building, 15 Cotswold Road, Sutton SM2 5NG, GB;
PICHOWICZ, Mark, Institute of Cancer Research, Cancer Therapeutics, Haddow Building, 15 Cotswold Road, Sutton SM2 5NG, GB;
CRUMPLER, Simon Ross, Institute of Cancer Research, Cancer Therapeutics, Haddow Building, 15 Cotswold Street, Sutton SM2 5NG, GB
(74) Harrison Goddard Foote, 4th Floor, Merchant Exchange, 17-19 Whitworth Street West, Manchester, M1 5WG, GB

**(51) (8)** **EP 2342194 ***
***C 07D 401/12***
***C 07D 403/12***
***A 61K 31/4178***
(30) US 04.11.2008. 111130 P
FR 04.11.2008. 0857496
(86) PCT/EP2009064646 04.11.2009.
(96) EP 09744417.8 04.11.2009. En
(87) WO2010052253 14.05.2010. 201019
(97) EP 2342194 13.07.2011. 201128 En
**(54) OXOAZETIDINE DERIVATIVES, PROCESS FOR THE PREPARATION THEREOF AND USE THEREOF IN HUMAN MEDICINE AND IN COSMETICS**
(71) Galderma Research & Development, 2400 Route des Colles, Les Templiers, 06410 Biot, FR
(72) BOUIX-PETER, Claire, 7 avenue du Général de Gaulle, F-06110 Le Cannet, FR;
SUZUKI, Itaru, 11 Avenue des Cades, Domaine Clair-Bois, F-83440 Fayence, FR;
RODEVILLE, Nicolas, 85 rue Henri Poincaré, Résidence Oxford App A311, F-06410 Biot, FR;
MAUVAIS, Pascale, 7 allée des Fées, Corniche des Cougoulins, F-06600 Antibes, FR;
PASCAL, Jean-Claude, 170 avenue de Gairaut, F-06100 Nice, FR
(74) Allab, Myriam, L'OREAL D.I.P.I., 25-29 Quai Aulagnier, 92665 Asnires-sur-Seine, FR

**(51) (8)** **EP 2324012 ***
***C 07D 403/00***
***C 07D 209/34***
***C 07D 401/04***
***C 07D 403/04***
***A 61K 31/506***
***A 61P 35/00***
(30) EP 29.07.2008. 08161381
(86) PCT/EP2009059770 28.07.2009.
(96) EP 09802511.7 28.07.2009. En
(87) WO2010012747 04.02.2010. 201005
(97) EP 2324012 25.05.2011. 201121 En
**(54) NEW COMPOUNDS**
(71) Boehringer Ingelheim International GmbH, Binger Strasse 173, 55216 Ingelheim am Rhein, DE
(72) TREU, Matthias, Boehringer Ingelheim GmbH, CD Patents, Binger Strasse 173, 55216 Ingelheim am Rhein, DE;
KARNER, Thomas, Boehringer Ingelheim GmbH, CD Patents, Binger Strasse 173, 55216 Ingelheim am Rhein, DE;
REISER, Ulrich, Boehringer Ingelheim GmbH, CD Patents, Binger Strasse 173, 55216 Ingelheim am Rhein, DE
(74) Hammann, Heinz, et al, Boehringer Ingelheim GmbH, Corporate Patents, Binger Strasse 173, 55216 Ingelheim am Rhein, DE

**(51) (8)** **EP 2324013** *
***C 07D 403/04***
***A 61K 31/498***
***A 61P 25/04***
(30) US 21.07.2008. 82482
(86) PCT/IB2009006356 20.07.2009.
(96) EP 09786064.7 20.07.2009. En
(87) WO2010010458 28.01.2010. 201004
(97) EP 2324013 25.05.2011. 201121 En
**(54) SUBSTITUTED-QUINOXALINE-TYPE BRIDGED-PIPERIDINE COMPOUNDS AND THE USES THEREOF**
(71) Purdue Pharma LP, One Stamford Forum, 201 Tresser Boulevard, Stamford, CT 06901-3431, US;
Shionogi & Co., Ltd., 1-8 Doshomachi 3-chome, Chuo-ku, Osaka-shi, Osaka 541-0045, JP
(72) YAO, Jiangchao, 10 Bellflower CT, Princeton, NJ 08540, US;
WHITEHEAD, John, W., F., 155 North State Street, Newtown, PA 18940, US;
TSUNO, Naoki, c/o Shionogi & Co., Ltd., 12-4, Sagisu 5-chome, Fukushima-ku, Osaka-shi, Osaka 553-0002, JP;
FUCHINO, Kouki, 12-4 Sagisu 5-chome, Fukushima-ku, Osaka 553-0002, JP
(74) Vos, Derk, Maiwald Patentanwalts GmbH, Elisenhof, Elisenstraße 3, DE-80335 München, DE

**(51) (8)** **EP 2337781** *
***C 07D 403/14***
***C 07D 401/14***
***C 07D 417/14***
***A 61K 31/4025***
***A 61K 31/4178***
***A 61K 31/4184***
***A 61K 31/4196***
***A 61K 31/4439***
***A 61P 31/14***
(30) US 11.06.2009. 186291 P
US 16.09.2009. 242836 P
US 18.09.2009. 243596 P
(86) PCT/US2010038077 10.06.2010.
(96) EP 10724656.3 10.06.2010. En
(87) WO2010144646 16.12.2010. 201050
(97) EP 2337781 29.06.2011. 201126 En
**(54) ANTI-VIRAL COMPOUNDS TO TREAT HCV INFECTION**
(71) Abbott Laboratories, Department D377/AP6A-1, 100 Abbott Park Road, Abbott Park, Illinois 60064, US
(72) RANDOLPH, John T., 304 Broadway Avenue, Libertyville, Illinois 60048, US;
DEGOEY, David A., 8649 226th avenue, Salem, Wisconsin 53168, US;
KATI, Warren M., 152 Knobb Hill Lane, Gurnee, Illinois 60031, US;
HUTCHINS, Charles W., 31005 Prairie Ridge Road, Green Oaks, Illinois 60048, US;
DONNER, Pamela L., 1901 Mcrae Lane, Mundelein, Illinois 60060, US;
KRUEGER, Allan C., 7260 Presidential Drive, Gurnee, Illinois 60031, US;
MOTTER, Christopher E., 10135 South Warwick, Oak Creek, Wisconsin 53154, US;
NELSON, Lissa T., 640 Broadview, Highland Park, Illinois 60035, US;
PATEL, Sachin V., 1259 S. Wild Meadow Road, Round Lake, Illinois 60073, US;
MATULENKO, Mark A., 1875 Countryside Lane, Libertyville, Illinois 60048, US;
KEDDY, Ryan G., 10046 West Hendee Road, Beach Park, Illinois 60087, US;
JINKERSON, Tammie K., 11129 10th Avenue, Pleasant Prairie, Wisconsin 53158, US;
SOLTWEDEL, Todd N., 5968 N. Landers Avenue, Chicago, Illinois 60646, US;
HUTCHINSON, Douglas K., 160 E. Depot Street, Antioch, Illinois 60002, US;
FLENTGE, Charles A., 8628 225th Avenue, Salem, Wisconsin 53168, US;
WAGNER, Rolf, 42530 Sheridan Oaks Drive, Antioch, Illinois 60002, US;
MARING, Clarence J., 1228 W. Borders Drive, Palatine, Illinois 60067, US;
TUFANO, Michael D., 6539 N. Washtensaw, Chicago, Illinois 60645, US;
BETEBENNER, David A., 220 Appley Avenue, Libertyville, Illinois 60048, US;
ROCKWAY, Todd W., 34136 N. Lavender Circle, Grayslake, Illinois 60030, US;
LIU, Dachun, 504 Lakehurst Road, Apt. 1r, Waukegan, Illinois 60085, US;
PRATT, John K., 8210 61st Avenue, Kenosha, Wisconsin 53142, US;
LAVIN, Michael J., 8650 W. Golf Road, Apt. 7, Des Plaines, Illinois 60016, US;
SARRIS, Kathy, 1309 Andover Drive, Mundelein, Illinois 60060, US;
WOLLER, Kevin R., 1072 Joy Court, Antioch, Illinois 60002, US;
WAGAW, Seble H., 2311 Ridgeway, Evanston, Illinois 60201, US;
CALIFANO, Jean C., 6167 N. Bay Ridge, Whitefish Bay, Wisconsin 53217, US;
LI, Wenke, 7203 Buchanan Drive, Gurnee, Illinois 60031, US;
CASPI, Daniel.D., 807 Davis, Unit 912, Evanston, IL 60201, US;
BELLIZZI, Mary, E., 771 N. McKinley Road, Lake Forest, IL 60045, US
(74) Modiano, Micaela Nadia, Modiano & Partners, Thierschstrasse 11, 80538 München, DE

**(51) (8)** **EP 2328891** *
***C 07D 405/04***
***A 61K 31/443***
***A 61K 51/04***
***A 61P 25/28***
***C 07D 307/78***
(30) US 29.08.2008. 92851 P
(86) PCT/SE2009050972 28.08.2009.
(96) EP 09810319.5 28.08.2009. En
(87) WO2010024769 04.03.2010. 201009
(97) EP 2328891 08.06.2011. 201123 En
**(54) NEW BENZOFURANS SUITABLE AS PRECURSORS TO COMPOUNDS THAT ARE USEFUL FOR IMAGING AMYLOID DEPOSITS**
(71) AstraZeneca AB, 151 85 Södertälje, SE
(72) BJÖRK, Seth, AstraZeneca R&D Södertälje, S-151 85 Södertälje, SE;

DELISSER, Vern, AstraZeneca R&D Södertälje, S-151 85 Södertälje, SE;
JOHNSTRÖM, Peter, AstraZeneca R&D Södertälje, S-151 85 Södertälje, SE;
NILSSON, Nils Anders, AstraZeneca R&D Södertälje, S-151 85 Södertälje, SE;
RUDA, Katinka, AstraZeneca R&D Södertälje, S-151 85 Södertälje, SE;
SCHOU, Per Magnus, AstraZeneca R&D Södertälje, S-151 85 Södertälje, SE;
SWAHN, Britt-Marie, AstraZeneca R&D Södertälje, S-151 85 Södertälje, SE
(74) Wahlström, Stig Christer Gunnar, et al, AstraZeneca AB, AstraZeneca Intellectual Property, 151 85 Södertälje, SE

**(51) (8)** **EP 2334668 ***
***C 07D 405/14***
***A 61K 31/41***
***A 61P 9/12***
(30) SI 05.09.2008. 200800208
(86) PCT/EP2009061583 07.09.2009.
(96) EP 09782721.6 07.09.2009. En
(87) WO2010026255 11.03.2010. 201010
(97) EP 2334668 22.06.2011. 201125 En
**(54) PROCESS FOR PREPARING OLMESARTAN MEDOXOMIL INTERMEDIATE**
(71) Krka Tovarna Zdravil, D.D., Novo Mesto, Smarjeska cesta 6, 8501 Novo Mesto, SI
(72) ZUPANCIC, Silvo, Zupnca 4-b, 8000 Novo mesto, SI
(74) HOFFMANN EITLE, Patent- und Rechtsanwälte, Arabellastraße 4, 81925 München, DE

**(51) (8)** **EP 2099791 ***
***C 07D 409/06***
***A 61K 31/381***
***A 61P 3/00***
(30) US 04.12.2006. 868368 P
(86) PCT/US2007086247 03.12.2007.
(96) EP 07854902.9 03.12.2007. En
(87) WO2008070609 12.06.2008. 200824
(97) EP 2099791 16.09.2009. 200938 En
**(54) THIENYL-CONTAINING GLYCOPYRANOSYL DERIVATIVES AS ANTIDIABETICS**
(71) Janssen Pharmaceutica, N.V., Turnhoutseweg 30, 2340 Beerse, BE;
Mitsubishi Tanabe Pharma Corporation, 2-10, Dosho-machi 3-chome, Chuo-ku, Osaka-shi, Osaka 541-8505, JP
(72) COOK, Kevin L., 69 Wentworth Road, Bedminster, NJ 07921, US;
LIM, Heng-keang, 9 Dustin Drive, Lawrenceville, NJ 08648, US;
VILLANI, Frank J., 2 Pinewood Lane, Perkasie, Pennsylvania 18944, US;
SCOTT, Lorraine, 135 Red Haven Drive, North Wales, Pennsylvania 19454, US;
BAUMANN, Christian Andrew, 231 Biddle Drive, Exton, Pennsylvania 19341, US
(74) Warner, James Alexander, et al, Carpmaels & Ransford, One Southampton Row, London, WC1B 5HA, GB

**(51) (8)** **EP 2324015 ***
***C 07D 409/06***
***C 07D 409/14***
***A 61K 31/445***
***A 61P 29/00***
***A 61P 25/00***
***A 61P 3/00***
***C 07D 417/06***
***C 07D 417/14***
***C 07D 333/38***
***C 07D 211/64***
***C 07D 205/04***
***C 07D 211/38***
***C 07D 211/62***
***A 61K 31/381***
***A 61K 31/397***
***A 61K 31/4535***
***A 61K 31/4545***
***A 61P 1/00***
***A 61P 19/00***
(30) FR 01.08.2008. 0804384
(86) PCT/FR2009051540 30.07.2009.
(96) EP 09740422.2 30.07.2009. Fr
(87) WO2010012964 04.02.2010. 201005
(97) EP 2324015 25.05.2011. 201121 Fr
**(54) THIOPHENE-2-CARBOXAMIDE DERIVATIVES, PREPARATION THEREOF AND THERAPEUTIC USE THEREOF**
(71) Sanofi-Aventis, 174 avenue de France, 75013 Paris, FR
(72) BARTH, Francis, c/o Sanofi-Aventis, Département Brevets, 174 avenue de France, F-75013 Paris, FR;
DUCOUX, Jean-Philippe, c/o Sanofi-Aventis, Département Brevets, 174 avenue de France, F-75013 Paris, FR;
GUEULE, Patrick, c/o Sanofi-Aventis, Département Brevets, 174 avenue de France, F-75013 Paris, FR;
RINALDI-CARMONA, Murielle, c/o Sanofi-Aventis, Département Brevets, 174 avenue de France, F-75013 Paris, FR;
ROUQUETTE, Arnaud, c/o Sanofi-Aventis, Département Brevets, 174 avenue de France, F-75013 Paris, FR
(74) Werner, Alain Henri, et al, Sanofi-Aventis, Département Brevets, 174, avenue de France, 75013 Paris, FR

**(51) (8)** **EP 2324017 ***
***C 07D 413/10***
***C 07D 413/14***
***A 61K 31/5355***
***A 61P 3/00***
***A 61P 19/10***
***A 61P 25/00***
(30) US 25.07.2008. 135933 P
US 04.02.2009. 206767 P
(86) PCT/EP2009059509 23.07.2009.
(96) EP 09780992.5 23.07.2009. En
(87) WO2010010157 28.01.2010. 201004
(97) EP 2324017 25.05.2011. 201121 En
**(54) INHIBITORS OF 11beta-HYDROXYSTEROID DEHYDROGENASE 1**
(71) Boehringer Ingelheim International GmbH, Binger Strasse 173, 55216 Ingelheim am Rhein, DE;
Vitae Pharmaceuticals, Inc., 502 West Office Center Drive, Fort Washington, PA 19034, US
(72) HIMMELSBACH, Frank, Boehringer Ingelheim GmbH, CD Patents, Binger Str. 173, 55216 Ingelheim am Rhein, DE;

ECKHARDT, Matthias, Boehringer Ingelheim GmbH, CD Patents, Binger Str. 173, 55216 Ingelheim am Rhein, DE;
HAMILTON, Bradford, S., Boehringer Ingelheim GmbH, CD Patents, Binger Str. 173, 55216 Ingelheim am Rhein, DE;
SCHULER-METZ, Annette, Boehringer Ingelheim GmbH, CD Patents, Binger Str. 173, 55216 Ingelheim am Rhein, DE;
ZHUANG, Linghang, 3135 Fox Drive, Chalfont, Pennsylvania 18914, US
(74) Hammann, Heinz, et al, Boehringer Ingelheim GmbH, Corporate Patents, Binger Strasse 173, 55216 Ingelheim am Rhein, DE

**(51) (8)** **EP 2324018 ***
***C 07D 413/10***
***C 07D 413/14***
***A 61K 31/5355***
***A 61P 19/10***
(30) WO 30.04.2009. PCT/US2009/002653
WO 25.07.2008. PCT/US2008/009017
US 04.02.2009. 206785 P
US 25.07.2008. 137148 P
(86) PCT/US2009004261 23.07.2009.
(96) EP 09788981.0 23.07.2009. En
(87) WO2010011314 28.01.2010. 201004
(97) EP 2324018 25.05.2011. 201121 En
**(54) CYCLIC INHIBITORS OF 11 BETA-HYDROXYSTEROID DEHYDROGENASE 1**
(71) Boehringer Ingelheim International GmbH, Binger Strasse 173, 55216 Ingelheim am Rhein, DE;
Vitae Pharmaceuticals, Inc., 502 West Office Center Drive, Fort Washington, PA 19034, US
(72) HIMMELSBACH, Frank, c/o Boehringer Ingelheim GmbH, CD Patents, 173 Binger Strasse, 55216 Ingelheim am Rhein, DE;
CLAREMON, David, A., 1508 Aidenn Lair Road, Maple Glen, PA 19002, US;
ZHUANG, Linghang, 3135 Fox Drive, Chalfont, PA 18914, US;
LEFTHERIS, Katerina, 92 Richmond Drive, Skillman, NJ 08558, US;
XU, Zhenrong, 3855 Blair Mill Road Apt. 235-B, Horsham, PA 19002, US;
TICE, Colin, M., 1325 Pinebrook Court, Amber, PA 19002, US
(74) Simpson, Mark Geoffrey, Potter Clarkson LLP, Park View House, 58 The Ropewalk, Nottingham, NG1 5DD, GB

**(51) (8)** **EP 2328893 ***
***C 07D 413/10***
***C 07D 405/14***
***C 07D 249/10***
***A 61K 31/343***
***A 61K 31/4196***
(30) US 08.08.2008. 188397 P
(86) PCT/US2009053157 07.08.2009.
(96) EP 09791292.7 07.08.2009. En
(87) WO2010017479 11.02.2010. 201006
(97) EP 2328893 08.06.2011. 201123 En
**(54) TRIAZOLE COMPOUNDS THAT MODULATE HSP90 ACTIVITY**
(71) Synta Pharmaceuticals Corp., 45 Hartwell Avenue, Lexington, MA 02421, US
(72) YING, Weiwen, 31 Bayberry Road, Groton, MA 01450, US;
CHIMMANAMADA, Dinesh, U., 26-B Liberty Street, Waltham, MA 02452, US;
BURLISON, Joseph, A., 6 Littles Brook Court, No. 133, Burlington, MA 01803, US;
ZHANG, Shijie, 27 Lojko Drive, Nashua, New Hampshire 03062, US;
SONG, Minghu, 801 Melrose CT, Chester Springs, Pennsylvania 19425, US;
CHAE, Junghyun, Woosung 4-cha, Apartment 402-203, Shingil-2Dong, 102-8, Youngdengpo-gu, Seoul 150-774, KR
(74) Snodin, Michael D., Potter Clarkson LLP, Park View House, 58 The Ropewalk, Nottingham, NG1 5DD, GB

**(51) (8)** **EP 2331534 ***
***C 07D 413/12***
***C 07D 417/12***
***C 07D 263/57***
***A 61P 3/00***
***A 61K 31/42***
***A 61P 3/10***
***A 61K 31/423***
***C 07D 277/66***
(30) US 12.08.2008. 188688 P
(86) PCT/US2009053459 11.08.2009.
(96) EP 09807188.9 11.08.2009. En
(87) WO2010019606 18.02.2010. 201007
(97) EP 2331534 15.06.2011. 201124 En
**(54) BENZOXAZOLES, BENZTHIAZOLES AND RELATED ANALOGS AS SIRTUIN MODULATORS**
(71) Sirtris Pharmaceuticals, Inc., 200 Technology Square, Suite 300, Cambridge, MA 02139, US
(72) VU, Chi, B., 79 Bay State Road, Arlington, MA 02474, US
(74) McNab, Donald C., Marks & Clerk LLP, Aurora, 120 Bothwell Street, Glasgow, G2 7JS, GB

**(51) (8)** **EP 2331535 ***
***C 07D 413/12***
***A 01N 43/80***
(30) GB 04.09.2008. 0816133
GB 24.04.2009. 0907122
(86) PCT/EP2009059560 24.07.2009.
(96) EP 09781034.5 24.07.2009. En
(87) WO2010025998 11.03.2010. 201010
(97) EP 2331535 15.06.2011. 201124 En
**(54) INSECTICIDAL COMPOUNDS**
(71) Syngenta Participations AG, Schwarzwaldallee 215, 4058 Basel, CH;
Syngenta Limited, European Regional Centre, Priestley Road Surrey Research Park, Guildford, Surrey GU2 7YH, GB
(72) RENOLD, Peter, Syngenta Crop Protection Münchwilen AG, Schaffhauser Strasse, CH-4332 Stein, CH;
CASSAYRE, Jérôme Yves, Syngenta Crop Protection Münchwilen AG, Schaffhauser Strasse, CH-4332 Stein, CH;
EL QACEMI, Myriem, Syngenta Crop Protection, Münchwilen AG, Schaffhauser Strasse, CH-4332 Stein, CH;
PITTERNA, Thomas, Syngenta Crop Protection Münchwilen AG, Schaffhauser Strasse, CH-4332 Stein, CH
(74) Thwaite, Jonathan Simon, Syngenta Crop Protection, Münchwilen AG, Intellectual Property Department, Schaffhauserstrasse, CH-4332 Stein, CH

**(51) (8)** **EP 2342200** *
***C 07D 413/12***
***C 07D 261/14***
***C 07D 413/14***
***C 07D 249/14***
***C 07D 413/04***
***C 07D 405/12***
***A 61K 31/42***
***A 61P 29/00***
***A 61P 37/00***
***A 61P 35/00***
***A 61P 1/00***
***A 61K 31/4196***
(30) US 25.09.2008. 100077 P
(86) PCT/US2009057776 22.09.2009.
(96) EP 09792816.2 22.09.2009. En
(87) WO2010036630 01.04.2010. 201013
(97) EP 2342200 13.07.2011. 201128 En
**(54) COMPOUNDS WHICH SELECTIVELY MODULATE THE CB2 RECEPTOR**
(71) Boehringer Ingelheim International GmbH, Binger Strasse 173, 55216 Ingelheim, DE
(72) BARTOLOZZI, Alessandra, Boehringer Ingelheim Pharmaceuticals Inc., 900 Ridgebury Road, P.O. Box 368, Ridgefield, Connecticut 06877-0368, US;
BERRY, Angela, Boehringer Ingelheim Pharmaceuticals Inc., 900 RidgeburyRoad, P.O. Box 368, Ridgefield, Connecticut 06877-0368, US;
HICKEY, Eugene, Richard, Boehringer Ingelheim Pharmaceuticals Inc., 900 Ridgebury Road, P.O. Box 368, Ridgefield, Connecticut 06877-0368, US;
OSTERMEIER, Markus, Boehringer Ingelheim GmbH, CD Patents, Binger Strasse 173, 55216 Ingelheim am Rhein, DE;
RIETHER, Doris, Boehringer Ingelheim Pharmaceuticals Inc., 900 Ridgebury Road, P.O. Box 368, Ridgefield, Connecticut 06877-0368, US;
SAUER, Achim, Boehringer Ingelheim GmbH, CD Patents, Binger Strasse 173, 55216 Ingelheim am Rhein, DE;
THOMSON, David Smith, Boehringer Ingelheim Pharmaceuticals Inc., 900 Ridgebury Road, P.O. Box 368, Ridgefield, Connecticut 06877-0368, US;
WU, Lifen, Boehringer Ingelheim Pharmaceuticals Inc., 900 Ridgebury Road, P.O. Box 368, Ridgefield, Connecticut 06877-0368, US;
ZINDELL, Renee M., Boehringer Ingelheim Pharmaceuticals Inc., 900 Ridgebury Road, P.O. Box 368, Ridgefield, Connecticut 06877-0368, US;
AMOUZEGH, Patricia, 114 Milton Park, Abingdon Oxfordshire OX14 4SA, GB;
BLUMIRE, Nigel James, 114 Milton Park, Abingdon Oxfordshire OX14 4SA, GB;
EAST, Stephen Peter, 114 Milton Park, Abingdon Oxfordshire OX14 4SA, GB;
ERMANN, Monika, 114 Milton Park, Abingdon Oxfordshire OX14 4SA, GB;
KHOR, Someina, 114 Milton Park, Abingdon Oxfordshire OX14 4SA, GB;
MUSHI, Innocent, 114 Milton Park, Abingdon Oxfordshire OX14 4SA, GB
(74) Hammann, Heinz, Boehringer Ingelheim, Pharma GmbH & Co. KG, CD Patents, Binger Strasse 173, DE-55216 Ingelheim Am Rhein, DE

**(51) (8)** **EP 2334670** *
***C 07D 417/04***
***C 07D 285/135***
***A 61K 31/433***
***A 61P 29/00***
(30) EP 14.10.2008. 08382042
(86) PCT/EP2009007348 13.10.2009.
(96) EP 09820269.0 13.10.2009. En
(87) WO2010043377 22.04.2010. 201016
(97) EP 2334670 22.06.2011. 201125 En
**(54) NEW 2-AMIDOTHIADIAZOLE DERIVATIVES**
(71) Almirall S.A., Ronda del General Mitre, 151, 08022 Barcelona, ES
(72) GRIMA POVEDA, Pedro Manuel, Laureà Mir 408-410, 08980 Sant Feliu de Llobregat, Barcelona, ES;
AGUILAR IZQUIERDO, Nuria, Laureà Mir 408-410, 08980 Sant Feliu de Llobregat, Barcelona, ES;
MIR CEPEDA, Marta, Laureà Mir 408-410, 08980 Sant Feliu de Llobregat, Barcelona, ES;
LOPEZ MARTINEZ, Manuel, Laureà Mir 408-410, 08980 Sant Feliu de Llobregat, Barcelona, ES
(74) Srinivasan, Ravi Chandran, J.A. Kemp & Co., 14 South Square, Gray's Inn, GB-London WC1R 5JJ, GB

**(51) (8)** **EP 2331538** *
***C 07D 417/14***
***A 61K 31/4709***
***A 61P 31/12***
(30) US 16.09.2008. 97291 P
US 09.03.2009. 150826 P
(86) PCT/US2009056772 14.09.2009.
(96) EP 09792493.0 14.09.2009. En
(87) WO2010033444 25.03.2010. 201012
(97) EP 2331538 15.06.2011. 201124 En
**(54) CRYSTALLINE FORMS OF A 2-THIAZOLYL- 4-QUINOLINYL-OXY DERIVATIVE, A POTENT HCV INHIBITOR**
(71) Boehringer Ingelheim International GmbH, Binger Strasse 173, 55216 Ingelheim, DE
(72) BERKENBUSCH, Thilo, Boehringer Ingelheim GmbH, CD Patent, Binger Strasse 173, 55216 Ingelheim, DE;
BUSACCA, Carl Alan, Boehringer Ingelheim Pharmaceuticals Inc., 900 Ridgebury Road, P.O. Box 368, Ridgefield, Connecticut 06877-0368, US;
JAEGER, Burkhard, Boehringer Ingelheim GmbH, CD Patent, Binger Strasse 173, 55216 Ingelheim, DE;
VARSOLONA, Richard J., Boehringer Ingelheim Pharmaceuticals Inc., 900 Ridgebury Road, P.O. Box 368, Ridgefield, Connecticut 06877-0368, US
(74) Zwickl, Markus, Boehringer Ingelheim GmbH, CD Patents, Binger Strasse 173, 55216 Ingelheim am Rhein, DE

**(51) (8)** **EP 2121687** *
***C 07D 471/04***
***C 07D 487/04***
***A 61K 31/437***
***A 61P 35/00***
(30) GB 22.12.2006. 0625827
US 22.12.2006. 871538 P
GB 12.10.2007. 0719998
US 12.10.2007. 979582 P
(86) PCT/GB2007004960 21.12.2007.
(96) EP 07848681.8 21.12.2007. En

(87) WO2008078100 03.07.2008. 200827
(97) EP 2121687 25.11.2009. 200948 En
**(54) TRICYCLIC AMINE DERIVATIVES AS PROTEIN TYROSINE KINASE INHIBITORS**
(71) Astex Therapeutics Limited, 436 Cambridge Science Park, Milton Road, Cambridge, CB4 0QA, GB
(72) BERDINI, Valerio, c/o Astex Therapeutics Limited, 436 Cambridge Science Park, Milton Road, Cambridge CB4 0QA, GB;
BESONG, Gilbert Ebai, c/o Astex Therapeutics Limited, 436 Cambridge Science Park, Milton Road, Cambridge CB4 0QA, GB;
CALLAGHAN, Owen, Aawall 11, NL-5211 PS Den Bosch, NL;
CARR, Maria Grazia, c/o Astex Therapeutics Limited, 436 Cambridge Science Park, Milton Road, Cambridge CB4 0QA, GB;
CONGREVE, Miles Stuart, c/o Heptares Therapeutics Limited, Broadwater Road, Welwyn Garden City, Hertfordshire AL7 3AX, GB;
GILL, Adrian Liam, c/o LG DECS, 52G28 Mereside, Alderley Park, Macclesfield, Cheshire SK10 4TG, GB;
GRIFFITHS-JONES, Charlotte Mary, c/o Astex Therapeutics Limited, 436 Cambridge Science Park, Milton Road, Cambridge CB4 0QA, GB;
MADIN, Andrew, c/o Astex Therapeutics Limited, 436 Cambridge Science Park, Milton Road, Cambridge CB4 0QA, GB;
MURRAY, Christopher William, c/o Astex Therapeutics Limited, 436 Cambridge Science Park, Milton Road, Cambridge CB4 0QA, GB;
NIJJAR, Rajdeep Kaur, 15 Fairlight Drive, Uxbridge, Middlesex UB8 1XP, GB;
O'BRIEN, Michael Alistair, c/o Astex Therapeutics Limited, 436 Cambridge Science Park, Milton Road, Cambridge CB4 0QA, GB;
PIKE, Andrew, 10 Priory Court, Apton Road, Bishops Stortford, Cambridge CM23 3SF, GB;
SAXTY, Gordon, c/o Astex Therapeutics Limited, 436 Cambridge Science Park, Milton Road, Cambridge CB4 0QA, GB;
TAYLOR, Richard David, 208 Bath Road, Slough SL1 3WE, GB;
VICKERSTAFFE, Emma, 11 Lucas Lane, Ashwell, Baldock SG7 5LN, GB
(74) Trueman, Lucy Petra, Barker Brettell LLP, 100 Hagley Road, Edgbaston, Birmingham, B16 8QQ, GB

---

**(51) (8)** **EP 2334673 ***
***C 07D 471/04***
***A 61K 31/444***
***A 61P 29/00***
(30) US 29.08.2008. 93112 P
(86) PCT/US2009055095 26.08.2009.
(96) EP 09791961.7 26.08.2009. En
(87) WO2010025202 04.03.2010. 201009
(97) EP 2334673 22.06.2011. 201125 En
**(54) PYRIDO[3,2-d]PYRIDAZINE-2(1H)-ONE COMPOUNDS AS P38 MODULATORS AND METHODS OF USE THEREOF**
(71) Amgen Inc., One Amgen Center Drive, Thousand Oaks, CA 91320-1799, US;
Pettus, Liping H., 3309 Big Cloud Circle, Thousand Oaks, CA 91360, US;
Tasker, Andrew, 561 Granite Hills Street, Simi Valley, CA 93065, US
(72) PETTUS, Liping, H., 3309 Big Cloud Circle, Thousand Oaks, CA 91360, US;
TASKER, Andrew, 561 Granite Hills Street, Simi Valley, CA 93065, US;
WU, Bin, 1820 Via Petirrojo Apt. J, Thousand Oaks, CA 91320, US
(74) Grünecker, Kinkeldey, Stockmair & Schwanhäusser, Anwaltssozietät, Leopoldstrasse 4, 80802 München, DE

---

**(51) (8)** **EP 2334674 ***
***C 07D 471/04***
***A 61K 31/5025***
***A 61P 29/00***
***A 61P 31/00***
***A 61P 17/00***
(30) US 29.08.2008. 92930 P
US 21.01.2009. 146139 P
(86) PCT/US2009055093 26.08.2009.
(96) EP 09791960.9 26.08.2009. En
(87) WO2010025201 04.03.2010. 201009
(97) EP 2334674 22.06.2011. 201125 En
**(54) PYRIDAZINO- PYRIDINONE COMPOUNDS FOR THE TREATMENT OF PROTEIN KINASE MEDIATED DISEASES.**
(71) Amgen, Inc, One Amgen Center Drive, Thousand Oaks, CA 91320-1799, US
(72) PETTUS, Liping H., 3309 Big Cloud Circle, Thousand Oaks, California 91360, US;
TASKER, Andrew, 561 Granite Hills Street, Simi Valley, California 93065, US;
WANG, Hui-Ling, 822 Lynnmere Drive, Thousand Oaks, California 91360, US;
WU, Bin, 1820 Via Petirrojo Apt. J, Thousand Oaks, California 91320, US;
WURZ, Ryan, 53 Ocatillo Avenue, Newbury Park, California 91320, US
(74) Grünecker, Kinkeldey, Stockmair & Schwanhäusser, Anwaltssozietät, Leopoldstrasse 4, 80802 München, DE

---

**(51) (8)** **EP 2334677 ***
***C 07D 471/04***
***A 61K 31/47***
(30) US 19.08.2008. 89952 P
US 04.05.2009. 175277 P
(86) PCT/US2009054193 18.08.2009.
(96) EP 09791625.8 18.08.2009. En
(87) WO2010022076 25.02.2010. 201008
(97) EP 2334677 22.06.2011. 201125 En
**(54) TRIAZOLOPYRIDINE COMPOUNDS AS PIM KINASE INHIBITORS**
(71) Array Biopharma, Inc., 3200 Walnut Street, Boulder, CO 80301, US
(72) ALLEN, Shelley, c/o Array BioPharma Inc., 3200 Walnut Street, Boulder, CO 80301, US;
CELESTE, Laura L., c/o Array BioPharma Inc., 3200 Walnut Street, Boulder, CO 80301, US;
DAVIS, T. Gregg, c/o Array BioPharma Inc., 3200 Walnut Street, Boulder, CO 80301, US;

DELISLE, Robert Kirk, c/o Array BioPharma Inc., 3200 Walnut Street, Boulder, CO 80301, US;
GRESCHUK, Julie Marie, c/o Array BioPharma Inc., 3200 Walnut Street, Boulder, CO 80301, US;
GROSS, Stefan, D., c/o Array BioPharma Inc., 3200 Walnut Street, Boulder, CO 80301, US;
HICKEN, Erik, James, c/o Array BioPharma Inc., 3200 Walnut Street, Boulder, CO 80301, US;
JACKSON, Leila, J., c/o Array BioPharma Inc., 3200 Walnut Street, Boulder, CO 80301, US;
LYSSIKATOS, Joseph, P., c/o Array BioPharma Inc., 3200 Walnut Street, Boulder, CO 80301, US;
KALLAN, Nicholas C., c/o Array BioPharma Inc., 3200 Walnut Street, Boulder, CO 80301, US;
MARMSATER, Fredrik, P., c/o Array BioPharma Inc., 3200 Walnut Street, Boulder, CO 80301, US;
MUNSON, Mark, C., c/o Array BioPharma Inc., 3200 Walnut Street, Boulder, CO 80301, US;
PHENEGER, Jed, c/o Array BioPharma Inc., 3200 Walnut Street, Boulder, CO 80301, US;
RAST, Bryson, c/o Array BioPharma Inc., 3200 Walnut Street, Boulder, CO 80301, US;
ROBINSON, John, E., c/o Array BioPharma Inc., 3200 Walnut Street, Boulder, CO 80301, US;
SCHLACHTER, Stephen T., c/o Array BioPharma Inc., 3200 Walnut Street, Boulder, CO 80301, US;
TOPALOV, George T., c/o Array BioPharma Inc., 3200 Walnut Street, Boulder, CO 80301, US;
WRIGHT, A. Dale, c/o Array BioPharma Inc., 3200 Walnut Street, Boulder, CO 80301, US;
ZHAO, Qian, c/o Array BioPharma Inc., 3200 Walnut Street, Boulder, CO 80301, US
(74) Office Freylinger, P.O. Box 48, 8001 Strassen, LU

**(51) (8)** **EP 2342203 ***
***C 07D 471/04***
***A 61K 31/444***
***A 61K 31/437***
***A 61P 3/00***
***A 61P 9/00***
***A 61P 11/00***
***A 61P 17/00***
***A 61P 19/08***
***A 61P 25/28***
***A 61P 27/02***
***A 61P 27/16***
(30) EP 23.09.2008. 08164849
(86) PCT/IB2009054155 22.09.2009.
(96) EP 09815761.3 22.09.2009. En
(87) WO2010035220 01.04.2010. 201013
(97) EP 2342203 13.07.2011. 201128 En
**(54) PYRAZOLO PYRIDINE DERIVATIVES AS NADPH OXIDASE INHIBITORS**
(71) GenKyoTex SA, Chemin des Aulx 14, 1228 Plan-les-Ouates, CH
(72) PAGE, Patrick, Naxos, les Cyclades 1 Avenue de Genve, F-74160 Saint-Julien-en-Genevois, FR;
ORCHARD, Mike, 34 Spring Lane Watlington, Oxon, Oxfordshire OX49 5QN, GB;
LALEU, BenoSt, 519 route du poirier à l'?ne, F-74160 Collonges-sous-Salve, FR;
GAGGINI, Francesca, Rue des Pecheries 14, CH-1205 Geneva, CH
(74) reuteler & cie SA, Chemin de la Vuarpillire 29, 1260 Nyon, CH

**(51) (8)** **EP 2324024 ***
***C 07D 471/14***
***A 61K 31/519***
***A 61P 35/00***
(30) US 11.06.2008. 60750 P
US 28.01.2009. 148004 P
(86) PCT/US2009003481 10.06.2009.
(96) EP 09762885.3 10.06.2009. En
(87) WO2009151589 17.12.2009. 200951
(97) EP 2324024 25.05.2011. 201121 En
**(54) DIAZACARBAZOLES AND METHODS OF USE**
(71) Genentech, Inc., 1 DNA Way, South San Francisco, CA 94080, US
(72) DYKE, Hazel, Joan, Argenta Discovery Ltd., 8/9 Spire Green Centre, Flex Meadow, Harlow, Essex CM195TR, GB;
GANCIA, Emanuela, Argenta Discovery Ltd., 8/9 Spire Green Centre, Flex Meadow, Harlow, Essex CM195TR, GB;
GAZZARD, Lewis, J., 2552 Belmont Canyon Road, Belmont, CA 94002, US;
GOODACRE, Simon, Charles, Argenta Discovery Ltd., 8/9 Spire Green Centre, Flex Meadow, Harlow, Essex CM195TR, GB;
LYSSIKATOS, Joseph, P., 42 Alta Ave., Piedmont, CA 94611, US;
MACLEOD, Calum, Argenta Discovery Ltd., 8/9 Spire Green Centre, Flex Meadow, Harlow, Essex CM195TR, GB;
WILLIAMS, Karen, Argenta Discovry Ltd., 8/9 Spire Green Centre, Flex Meadow, Harlow, Essex CM195TR, GB;
CHEN, Huifen, 482 Cumberland Road, Burlingame, CA 94010, US
(74) Kiddle, Simon John, et al, Mewburn Ellis LLP, 33 Gutter Lane, London, EC2V 8AS, GB

**(51) (8)** **EP 2069346 ***
***C 07D 471/18***
***A 61K 31/439***
***A 61P 25/00***
(30) US 23.03.2007. 896749 P
(86) PCT/US2008057643 20.03.2008.
(96) EP 08732554.4 20.03.2008. En
(87) WO2008118743 02.10.2008. 200840
(97) EP 2069346 17.06.2009. 200925 En
**(54) ACETAMIDE AND CARBOXAMIDE DERIVATIVES OF AZAADAMANTANE AND METHODS OF USE THEREOF**
(71) ABBOTT LABORATORIES, 100 Abbott Park Road, Abbott Park, IL 60064, US
(72) SCANIO, Marc J., C., 2907 Harvest Lane, Lindenhurst, Illinois 60046, US;
SHI, Lei, 700 Creekside Circle, Gurnee, Illinois 60031, US;
BUNNELLE, William, H., 1826 Victoria Road, Mundelein, Illinois 60060, US;
SCHRIMPF, Michael, R., 327 Cambridge Drive, Grayslake, Illinois 60030, US
(74) Modiano, Micaela Nadia, et al, Modiano Josif Pisanty & Staub Ltd, Thierschstrasse 11, 80538 München, DE

**(51) (8)** **EP 2324025** *
***C 07D 473/16***
***C 07D 473/18***
***A 61K 31/522***
***A 61P 37/00***
***A 61P 35/00***
(30) US 11.08.2008. 87790 P
(86) PCT/EP2009060263 07.08.2009.
(96) EP 09781604.5 07.08.2009. En
(87) WO2010018131 18.02.2010. 201007
(97) EP 2324025 25.05.2011. 201121 En
**(54) PURINE DERIVATIVES FOR USE IN THE TREATMENT OF ALLERGIC, INFLAMMATORY AND INFECTIOUS DISEASES**
(71) Smithkline Beecham Corporation, One Franklin Plaza, PO Box 7929, Philadelphia, PA 19101, US
(72) BAZIN-LEE, Helene, GlaxoSmithKline, Old Corvallis Road, Hamilton, Montana 59840, US;
BIGGADIKE, Keith, GlaxoSmithKline, Gunnels Wood Road, Stevenage Hertfordshire SG1 2NY, GB;
COE, Diane, Mary, GlaxoSmithKline, Gunnels Wood Road, Stevenage Hertfordshire SG1 2NY, GB;
LEWELL, Xiao, Qing, GlaxoSmithKline, Gunnels Wood Road, Stevenage Hertfordshire SG1 2NY, GB;
MITCHELL, Charlotte, Jane, GlaxoSmithKline, Gunnels Wood Road, Stevenage Hertfordshire SG1 2NY, GB;
TRIVEDI, Naimisha, C/o GlaxoSmithKline, Gunnels Wood Road, Stevenage Hertfordshire SG1 2NY, GB
(74) Povey, Alexander W.G., GlaxoSmithKline, Corporate Intellectual Property, (CN9.25.1), 980 Great West Road, Brentford, Middlesex TW8 9GS, GB

**(51) (8)** **EP 2324026** *
***C 07D 473/18***
***C 07D 473/16***
***A 61K 31/522***
***A 61P 37/00***
***A 61P 35/00***
(30) US 11.08.2008. 87777 P
(86) PCT/EP2009060265 07.08.2009.
(96) EP 09781606.0 07.08.2009. En
(87) WO2010018133 18.02.2010. 201007
(97) EP 2324026 25.05.2011. 201121 En
**(54) PURINE DERIVATIVES FOR USE IN THE TREATMENT OF ALLERGIC, INFLAMMATORY AND INFECTIOUS DISEASES**
(71) Smithkline Beecham Corporation, One Franklin Plaza, PO Box 7929, Philadelphia, PA 19101, US
(72) BIGGADIKE, Keith, GlaxoSmithKline, Gunnels Wood Road, Stevenage Hertfordshire SG1 2NY, GB;
COE, Diane, Mary, GlaxoSmithKline, Gunnels Wood Road, Stevenage Hertfordshire SG1 2NY, GB;
LEWELL, Xiao, Qing, GlaxoSmithKline, Gunnels Wood Road, Stevenage Hertfordshire SG1 2NY, GB;
MITCHELL, Charlotte, Jane, GlaxoSmithKline, Gunnels Wood Road, Stevenage Hertfordshire SG1 2NY, GB;
SMITH, Stephen, Allan, GlaxoSmithKline, Gunnels Wood Road, Stevenage Hertfordshire SG1 2NY, GB;
TRIVEDI, Naimisha, GlaxoSmithKline, Gunnels Wood Road, Stevenage Hertfordshire SG1 2NY, GB
(74) Povey, Alexander W.G., GlaxoSmithKline, Corporate Intellectual Property, (CN9.25.1), 980 Great West Road, Brentford, Middlesex TW8 9GS, GB

**(51) (8)** **EP 2081937** *
***C 07D 487/04***
***A 61K 31/5025***
***A 61K 31/53***
***A 61P 35/00***
***C 07D 519/00***
(30) US 23.10.2006. 862552 P
US 21.12.2006. 871384 P
US 24.04.2007. 913752 P
US 30.07.2007. 952833 P
(86) PCT/US2007081832 18.10.2007.
(96) EP 07854193.5 18.10.2007. En
(87) WO2008051805 02.05.2008. 200818
(97) EP 2081937 29.07.2009. 200931 En
**(54) TRIAZOLOPYRIDAZINE PROTEIN KINASE MODULATORS**
(71) SGX Pharmaceuticals, Inc., 10505 Roselle Street, San Diego, CA 92121, US
(72) SMITH, Christopher Ronald, SGX Pharmaceuticals, Inc., 10505 Roselle Street, San Diego, California 92121, US;
BOUNAUD, Pierre-Yves, SGX Pharmaceuticals, Inc., 10505 Roselle Street, San Diego, California 92121, US;
JEFFERSON, Elizabeth Anne, SGX Pharmaceuticals, Inc., 10505 Roselle Street, San Diego, California 92121, US;
LEE, Patrick S., SGX Pharmaceuticals, Inc., 10505 Roselle Street, San Diego, California 92121, US;
TORRES, Eduardo, SGX Pharmaceuticals, Inc., 10505 Roselle Street, San Diego, California 92121, US
(74) Burnside, Ivan John, Eli Lilly and Company Limited, Lilly Research Centre, Erl Wood Manor, Sunninghill Road, Windlesham, Surrey GU20 6PH, GB

**(51) (8)** **EP 2086981** *
***C 07D 487/04***
***A 61K 31/55***
***A 61P 35/00***
(30) US 16.11.2006. 859340 P
(86) PCT/US2007023948 14.11.2007.
(96) EP 07867449.6 14.11.2007. En
(87) WO2008063525 29.05.2008. 200822
(97) EP 2086981 12.08.2009. 200933 En
**(54) COMPOUNDS FOR INHIBITING MITOTIC PROGRESSION**
(71) Millennium Pharmaceuticals, Inc., 40 Landsdowne Street, Cambridge, MA 02139, US
(72) CLAIBORNE, Christopher F., 23 Sparks Street, Cambridge, MA 02138, US;
SELLS, Todd B., 32 Ray Avenue, Bellingham, MA 02019, US;
STROUD, Stephen G., 53 Tesla Avenue, Medford, MA 02155, US
(74) Harris, Jennifer Lucy, et al, Kilburn & Strode LLP, 20 Red Lion Street, London WC1R 4PJ, GB

**(51) (8)** **EP 2324028** *
***C 07D 487/04***
***A 61K 31/519***
***A 61P 3/04***
***A 61P 3/10***
(30) US 04.08.2008. 85919 P
US 09.04.2009. 168048 P
(86) PCT/GB2009050970 03.08.2009.
(96) EP 09785441.8 03.08.2009. En

(87) WO2010015849 11.02.2010. 201006
(97) EP 2324028 25.05.2011. 201121 En
**(54) THERAPEUTIC AGENTS 414**
(71) AstraZeneca AB, 151 85 Södertälje, SE
(72) BENNETT, Stuart, Norman, Lile, AstraZeneca R&D Alderley, Alderley Park, Macclesfield, Cheshire SK10 4TG, GB;
BONN, Peter, Gustaf, AstraZeneca R&D Mölndal, S-431 83 Mölndal, SE;
BRINK, Mikael, Dan, AstraZeneca R&D Mölndal, S-431 83 Mölndal, SE;
BUTLIN, Roger, John, AstraZeneca R&D Alderley, Alderley Park, Macclesfield, Cheshire SK10 4TG, GB;
CAMPBELL, Leonie, AstraZeneca R&D Alderley, Alderley Park, Macclesfield, Cheshire SK10 4TG, GB;
DAVIES, Robert, Darren, Morse, AstraZeneca R&D Alderley, Alderley Park, Macclesfield, Cheshire SK10 4TG, GB;
FÄGERHAG, Jonas, Rickard, AstraZeneca R&D Mölndal, S-431 83 Mölndal, SE;
JURVA, Ulrik, AstraZeneca R&D Mölndal, S-431 83 Mölndal, SE;
POINTON, Helen, Claire, AstraZeneca R&D Alderley, Alderley Park, Macclesfield, Cheshire SK10 4TG, GB;
ROBB, Graeme, Richard, AstraZeneca R&D Alderley, Alderley Park, Macclesfield, Cheshire SK10 4TG, GB;
SCHNECKE, Volker, AstraZeneca R&D Mölndal, S-431 83 Mölndal, SE;
SVENSSON HENRIKSSON, Anette Marie, AstraZeneca R&D Mölndal, S-431 83 Mölndal, SE;
WALKER, Rolf, Peter, AstraZeneca R&D Alderley, Alderley Park, Macclesfield, Cheshire SK10 4TG, GB;
WARING, Michael, James, AstraZeneca R&D Alderley, Alderley Park, Macclesfield, Cheshire SK10 4TG, GB;
WESTERLUND, Christer, Ralf, AstraZeneca R&D Mölndal, S-431 83 Mölndal, SE
(74) Miller, Thomas Kerr, et al, AstraZeneca AB, Global Intellectual Property, 151 85 Sodertalje, SE

**(51) (8)** **EP 2331545 ***
***C 07D 487/04***
(30) IN 27.08.2008. MU17982008
IN 02.02.2009. MU01882009
IN 30.03.2009. MU07852009
(86) PCT/IN2009000470 26.08.2009.
(96) EP 09765169.9 26.08.2009. En
(87) WO2010032264 25.03.2010. 201012
(97) EP 2331545 15.06.2011. 201124 En
**(54) IMPROVED PROCESS FOR PREPARATION OF (2R)-4-OXO-4-[3- (TRIFLUOROMETHYL)-5,6-DIHYDRO [1,2,4]-TRIAZOLO[4,3-A]PYRAZIN- 7(8H)-YL]-L-(2,4,5-TRIFLUOROPHENYL)BUTAN-2-AMINE&NEW IMPURITIES IN PREPARATION THEREOF**
(71) Cadila Healthcare Limited, Zydus Tower, Satellite Cross Roads, Ahmedabad 380 015 Gujarat, IN
(72) KOTHARI, Himanshu, Madhusudan, Cadila Healthcare Limited, Zydus Tower, Satellite Cross Roads, Ahmedabad 380 015, IN;
DAVE, Mayank, Ghanshyambhai, Cadila Healthcare Limited, Zydus Tower, Satellite Cross Roads, Ahmedabad 380 015, IN;
PANDEY, Bipin, Cadila Healthcare Limited, Zydus Tower, Satellite Cross Roads, Ahmedabad 380 015, IN;
SHUKLA, Bhavin, Shriprasad, Cadila Healthcare Limited, Zydus Tower, Satellite Cross Roads, Ahmedabad 380 015, IN
(74) Jones, Helen M.M., Gill Jennings & Every LLP, The Broadgate Tower, 20 Primrose Street, London EC2A 2ES, GB

**(51) (8)** **EP 2331546 ***
***C 07D 487/04***
***A 61K 31/5025***
***A 61P 25/00***
***A 61P 35/00***
(30) FR 12.08.2008. 0804573
US 12.08.2008. 88126 P
(86) PCT/FR2009001001 12.08.2009.
(96) EP 09737011.8 12.08.2009. Fr
(87) WO2010018327 18.02.2010. 201007
(97) EP 2331546 15.06.2011. 201124 Fr
**(54) 2-ALKYL-6-CYCLOAMINO-3-(PYRIDIN-4-YL)IMIDAZO[1,2-IB]-PYRIDAZINE DERIVATIVES, PREPARATION THEREOF, AND THERAPEUTIC APPLICATION THEREOF**
(71) Sanofi-Aventis, 174 avenue de France, 75013 Paris, FR
(72) ALMARIO GARCIA, Antonio, c/o sanofi-aventis, Département Brevets, 174 avenue de France, F-75013 Paris, FR;
BURNIER, Philippe, c/o sanofi-aventis, Département Brevets, 174 avenue de France, F-75013 Paris, FR;
COTE-DES COMBES, Sylvain, c/o sanofi-aventis, Département Brevets, 174 avenue de France, F-75013 Paris, FR;
GILBERT, Jean-François, c/o sanofi-aventis, Département Brevets, 174 avenue de France, F-75013 Paris, FR;
PACAUD, Christophe, c/o sanofi-aventis, Patent Départment, 174 avenue de France, F-75013 Paris, FR;
PUECH, Frédéric, c/o sanofi-aventis, Patent Départment, 174 avenue de France, F-75013 Paris, FR;
CHIANG, Yulin, c/o sanofi-aventis US. Inc., 1041 Routes 202-206, Mail Code: D-303A, Bridgewater, NJ 08807, US;
DAVIS, Larry, c/o sanofi-aventis US. Inc., 1041 Routes 202-206, Mail Code: D-303A, Bridgewater, NJ 08807, US;
GAO, Zhongli, c/o sanofi-aventis US. Inc., 1041 Routes 202-206, Mail Code: D-303A, Bridgewater, NJ 08807, US;
ZHAO, Qiuxia, c/o sanofi-aventis US. Inc., 1041 Routes 202-206, Mail Code: D-303A, Bridgewater, NJ 08807, US
(74) Tinel, Marie-Line, et al, Sanofi-Aventis, Département Brevets, 174, avenue de France, 75013 Paris, FR

**(51) (8)** **EP 2331547 ***
***C 07D 487/04***
***A 61K 31/519***
***A 61P 35/00***
(30) US 22.08.2008. 91037 P
(86) PCT/EP2009060793 20.08.2009.
(96) EP 09782051.8 20.08.2009. En
(87) WO2010020675 25.02.2010. 201008
(97) EP 2331547 15.06.2011. 201124 En
**(54) PYRROLOPYRIMIDINE COMPOUNDS AS CDK INHIBITORS**
(71) Novartis AG, Lichtstrasse 35, 4056 Basel, CH;
Astex Therapeutics Ltd., 436 Cambridge Science Park, Milton Road, Cambridge CB4 0QA, GB
(72) BESONG, Gilbert, Astex Therapeutics Ltd., 436 Cambridge Science Park, Milton Road, Cambridge CB4 0QA, GB;

BRAIN, Christopher Thomas, Novartis Institutes for BioMedical Research Inc., 250 Massachusetts Avenue, Cambridge, Massachusetts 02139, US;
BROOKS, Clinton A., 3274 Ridgecrest Rd., Smyrna, Georgia 30080, US;
CONGREVE, Miles Stuart, 11A Orchard Road, Melbourn, Royston SG8 6HL, GB;
DAGOSTIN, Claudio, 1 Hillfield Road, Comberton CB23 7DB, GB;
HE, Guo, Novartis Institutes for BioMedical Research Inc., 250 Massachusetts Avenue, Cambridge, Massachusetts 02139, US;
HOU, Ying, Novartis Institutes for BioMedical Research Inc., 250 Massachusetts Avenue, Cambridge, Massachusetts 02139, US;
HOWARD, Steven, Astex Therapeutics Ltd., 436 Cambridge Science Park, Milton Road, Cambridge CB4 0QA, GB;
LI, Yue, China Novartis Institutes for, BioMedical Research Co. Ltd., No. 8 Building, Lane 898 Halei Road, Zhangjiang Hi-Tech Park, Pudong New Area Shanghai 201203, CN;
LU, Yipin, Novartis Institutes for BioMedical Research Inc., 400 Technology Square, Cambridge, Massachusetts 02139, US;
MORTENSON, Paul, Astex Therapeutics Ltd., 436 Cambridge Science Park, Milton Road, Cambridge CB4 0QA, GB;
SMITH, Troy, Novartis Institutes for BioMedical Research Inc., 250 Massachusetts Avenue, Cambridge, Massachusetts 02139, US;
SUNG, Moo, Novartis Institutes for BioMedical Research Inc., 250 Massachusetts Avenue, Cambridge, Massachusetts 02139, US;
WOODHEAD, Steven, Astex Therapeutics Ltd., 436 Cambridge Science Park, Milton Road, Cambridge CB4 0QA, GB;
WRONA, Wojciech, Novartis Institutes for BioMedical Research Inc., 250 Massachusetts Avenue, Cambridge, Massachusetts 02139, US
(74) Dyer, James, et al, Novartis AG, Patent Department, 4002 Basel, CH

---

**(51) (8)** **EP 2334684 ***
***C 07D 487/04***
***A 61K 31/519***
***A 61P 25/00***
***A 61P 3/00***
(30) EP 08.09.2008. 08163879
EP 12.08.2009. 09167675
(86) PCT/EP2009061455 04.09.2009.
(96) EP 09782607.7 04.09.2009. En
(87) WO2010026214 11.03.2010. 201010
(97) EP 2334684 22.06.2011. 201125 En
**(54) PYRAZOLOPYRIMIDINES AND THEIR USE FOR THE TREATMENT OF CNS DISORDERS**
(71) Boehringer Ingelheim International GmbH, Binger Strasse 173, 55216 Ingelheim am Rhein, DE
(72) FUCHS, Klaus, Boehringer Ingelheim GmbH, CD Patents, Binger Strasse 173, 55216 Ingelheim Am Rhein, DE;
DORNER-CIOSSEK, Cornelia, Boehringer Ingelheim GmbH, CD Patents, Binger Strasse 173, 55216 Ingelheim Am Rhein, DE;
EICKMEIER, Christian, Boehringer Ingelheim GmbH, CD Patents, Binger Strasse 173, 55216 Ingelheim Am Rhein, DE;
FIEGEN, Dennis, Boehringer Ingelheim GmbH, CD Patents, Binger Strasse 173, 55216 Ingelheim Am Rhein, DE;
FOX, Thomas, Boehringer Ingelheim GmbH, CD Patents, Binger Strasse 173, 55216 Ingelheim Am Rhein, DE;
GIOVANNINI, Riccardo, Boehringer Ingelheim GmbH, CD Patents, Binger Strasse 173, 55216 Ingelheim Am Rhein, DE;
HEINE, Niklas, Boehringer Ingelheim GmbH, CD Patents, Binger Strasse 173, 55216 Ingelheim Am Rhein, DE;
HENDRIX, Martin, Bayer HealthCare Pharmaceuticals, 340 Changebridge Road, Pine Brook, New Jersey 07058-9714, US;
ROSENBROCK, Holger, Boehringer Ingelheim GmbH, CD Patents, Binger Strasse 173, 55216 Ingelheim Am Rhein, DE;
SCHAENZLE, Gerhard, Boehringer Ingelheim GmbH, CD Patents, Binger Strasse 173, 55216 Ingelheim Am Rhein, DE
(74) Hammann, Heinz, et al, Boehringer Ingelheim GmbH, CD-Patents, Binger Straße 173, 55216 Ingelheim am Rhein, DE

---

**(51) (8)** **EP 2342205 ***
***C 07D 487/04***
***A 61K 31/407***
***A 61K 31/437***
***A 61P 29/00***
***A 61P 31/12***
***A 61P 37/00***
(30) US 27.08.2008. 190311 P
US 24.06.2009. 269519 P
(86) PCT/US2009004851 26.08.2009.
(96) EP 09789210.3 26.08.2009. En
(87) WO2010027431 11.03.2010. 201010
(97) EP 2342205 13.07.2011. 201128 En
**(54) SUBSTITUTED TRICYCLIC ACID DERIVATIVES AS S1P1 RECEPTOR AGONISTS USEFUL IN THE TREATMENT OF AUTOIMMUNE AND INFLAMMATORY DISORDERS**
(71) Arena Pharmaceuticals, Inc., 6166 Nancy Ridge Drive, San Diego, CA 92121-3223, US
(72) JONES, Robert, M., 10937 Corte luz del Sol, San Diego, California 92130, US;
BUZARD, Daniel, J., 14494 Janal Way, San Diego, California 92129, US;
KAWASAKI, Andrew, M., 10554 Abalone Landing Terrace, San Diego, California 92130, US;
KIM, Sun Hee, 8936 Revelstoke Way, San Diego, California 92126, US;
THORESEN, Lars, 7130 Shoreline Drive, No. 1110, San Diego, California 92122, US;
LEHMANN, Juerg, 9840 La Tortola Ct., San Diego, California 92129, US;
ZHU, Xiuwen, 11367 Black Colt Lane, San Diego, California 92130, US
(74) Wytenburg, Wilhelmus Johannes, et al, Mewburn Ellis LLP, 33 Gutter Lane, London, EC2V 8AS, GB

---

**(51) (8)** **EP 2328900 ***
***C 07D 489/08***
***C 07D 489/02***
***B 01J 23/42***
(30) US 11.08.2008. 188574 P
(86) PCT/AU2009000925 21.07.2009.
(96) EP 09806216.9 21.07.2009. En
(87) WO2010017573 18.02.2010. 201007
(97) EP 2328900 08.06.2011. 201123 En

**(54) PROCESS FOR MAKING MORPHINAN-6 alpha-OLS**
(71) Tasmanian Alkaloids Pty. Ltd., 160 Birralee Road, Westbury, TAS 7303, AU
(72) BAILEY, Timothy S., 5 Canopus Drive, Blackstone Heights, Tasmania 7259, AU;
REZAIE, Robert, 83 Bayview Drive, Blackstone Heights, Tasmania 7250, AU
(74) Almond-Martin, Carol, et al, Ernest Gutmann - Yves Plasseraud S.A.S., 88, Boulevard des Belges, 69452 Lyon Cedex 06, FR

**(51) (8)** **EP 2326651 ***
***C 07D 489/12***
***A 61K 31/485***
***A 61P 25/04***
(30) US 16.07.2009. 226119 P
US 30.07.2008. 84764 P
(86) PCT/US2009004391 30.07.2009.
(96) EP 09789036.2 30.07.2009. En
(87) WO2010014229 04.02.2010. 201005
(97) EP 2326651 01.06.2011. 201122 En
**(54) BUPRENORPHINE ANALOGS**
(71) Purdue Pharma LP, One Stamford Forum, 201 Tresser Boulevard, Stamford, CT 06901, US
(72) KYLE, Donald, J., 29 Weatherfield Drive, Newtown, PA 18940, US;
GOEHRING, R., Richard, 315 Manor Drive, Dublin, PA 18917, US;
FUNDYTUS, Marian, E., 52 Fawn Hollow Road, Burlington, NJ 08016, US
(74) Vos, Derk, Maiwald Patentanwalts GmbH, Elisenhof, Elisenstraße 3, D-80335 München, DE

**(51) (8)** **EP 2324031 ***
***C 07D 491/04***
***A 61K 31/473***
***A 61K 31/4525***
(30) FR 28.07.2008. 0855161
(86) PCT/EP2009059715 28.07.2009.
(96) EP 09781165.7 28.07.2009. En
(87) WO2010012714 04.02.2010. 201005
(97) EP 2324031 25.05.2011. 201121 En
**(54) NITROGENATED DERIVATIVES OF PANCRATISTATIN**
(71) Pierre Fabre Medicament, 45, Place Abel Gance, 92100 Boulogne-Billancourt, FR
(72) MARION, Frédéric, 9 rue des Vases, F-31000 Toulouse, FR;
ANNEREAU, Jean-Philippe, 11 place Raspail, F-31400 Toulouse, FR;
FAHY, Jacques, 41 avenue du Général de Gaulle, F-81290 Labruguire, FR
(74) Ahner, Francis, et al, Cabinet Régimbeau, 20, rue de Chazelles, F-75847 Paris Cedex 17, FR

**(51) (8)** **EP 2069354 ***
***C 07D 491/048***
***A 61K 31/4355***
***A 61K 31/5025***
***A 61K 31/519***
***A 61P 35/00***
***A 61P 29/00***
(30) US 21.08.2006. 839161 P
US 22.12.2006. 871591 P
US 11.05.2007. 917623 P
US 18.06.2007. 944741 P
(86) PCT/US2007076344 20.08.2007.
(96) EP 07814272.6 20.08.2007. En
(87) WO2008024725 28.02.2008. 200809
(97) EP 2069354 17.06.2009. 200925 En
**(54) Aza-benzofuranyl compounds and methods of use**
(71) Genentech, Inc., 1 DNA Way, South San Francisco CA 94080-4990, US
(72) PRICE, Stephen, c/o Argenta Discovery Ltd., 8/9 Spire Green Centre, Flex Meadow, Harlow Essex CM19 5TR, GB;
WILLIAMS, Karen, c/o Argenta Discovery Ltd., 8/9 Spire Green Centre, Flex Meadow, Harlow Essex CM19 5TR, GB;
SAVY, Pascal Pierre, c/o Argenta Discovery Ltd., 8/9 Spire Green Centre, Flex Meadow, Harlow Essex CM19 5TR, GB;
DYKE, Hazel Joan, c/o Argenta Discovery Ltd., 8/9 Spire Green Centre, Flex Meadow, Harlow Essex CM19 5TR, GB;
MONTANA, John Gary, c/o Argenta Discovery Ltd., 8/9 Spire Green Centre, Flex Meadow, Harlow Essex CM19 5TR, GB;
STANLEY, Mark S., 284 Lauren Avenue, Pacifica, California 94044, US;
BAO, Liang, PO Box 4263, Foster City, California 94404, US
(74) Kiddle, Simon John, et al, Mewburn Ellis LLP, 33 Gutter Lane, London, EC2V 8AS, GB

**(51) (8)** **EP 2331548 ***
***C 07D 491/048***
***A 61K 31/496***
***A 61P 19/00***
(30) GB 24.09.2008. 0817424
(86) PCT/EP2009062406 24.09.2009.
(96) EP 09783391.7 24.09.2009. En
(87) WO2010034788 01.04.2010. 201013
(97) EP 2331548 15.06.2011. 201124 En
**(54) PROTEASE INHIBITORS**
(71) Medivir AB, P.O. Box 1086, 141 22 Huddinge, SE
(72) ODÉN, Lourdes Salvadore, Medivir AB, PO Box 1086, S-141 22 Huddinge, SE;
NILSSON, Magnus, Medivir AB, PO Box 1086, S-141 22 Huddinge, SE;
KAHNBERG, Pia, Medivir AB, PO Box 1086, S-141 22 Huddinge, SE;
SAMUELSSON, Bertil, Medivir AB, PO Box 1086, S-141 22 Huddinge, SE;
GRABOWSKA, Urszula, Medivir UK Ltd, Chesterford Research Park, Little Chesterford, Essex CB10 1XL, GB
(74) Goodall, Scott, Sagittarius IP, Taylor House, 39 High Street, Marlow, Buckinghamshire SL7 1AF, GB

**(51) (8)** **EP 2326653 ***
***C 07D 493/04***
***A 61K 31/36***
***A 61P 35/00***
(30) FR 19.08.2008. 0855629
(86) PCT/EP2009060739 19.08.2009.
(96) EP 09782006.2 19.08.2009. En
(87) WO2010020663 25.02.2010. 201008
(97) EP 2326653 01.06.2011. 201122 En
**(54) NEW (POLY)AMINOALKYLAMINOALKYLAMIDE, ALKYL-UREA, OR ALKYL-SULFONAMIDE DERIVATIVES OF EPIPODOPHYLLOTOXIN, A PROCESS FOR**

**PREPARING THEM, AND APPLICATION THEREOF IN THERAPY AS ANTICANCER AGENTS**
(71) Pierre Fabre Medicament, 45, Place Abel Gance, 92100 Boulogne-Billancourt, FR
(72) IMBERT, Thierry, 16 route de Saïx, F-81290 Viviers les Montagnes, FR;
GUMINSKI, Yves, 17 rue Jacques Prévert, F-81090 Lagarrigue, FR;
BARRET, Jean-Marc, 5 rue du Trésor, F-81100 Castres, FR;
KRUCZYNSKI, Anna, 7 résidence Castel Trompette, F-31450 Pompertuzat, FR
(74) Ahner, Francis, et al, Cabinet Régimbeau, 20, rue de Chazelles, 75847 Paris Cedex 17, FR

**(51) (8)** **EP 2334687 ***
***C 07D 493/10***
***C 07H 15/18***
***A 61K 31/357***
***A 61P 3/10***
(30) US 28.08.2008. 92470 P
US 21.07.2009. 227212 P
(86) PCT/IB2009053626 17.08.2009.
(96) EP 09786960.6 17.08.2009. En
(87) WO2010023594 04.03.2010. 201009
(97) EP 2334687 22.06.2011. 201125 En
**(54) DIOXA-BICYCLO[3.2.1.]OCTANE-2,3,4-TRIOL DERIVATIVES**
(71) Pfizer Inc., 235 East 42nd Street, New York, NY 10017, US
(72) MASCITTI, Vincent, Pfizer Global Research and Development, Eastern Point Road, Groton, Connecticut 06340, US;
COLLMAN, Benjamin, Micah, Pfizer Global Research and Development, Eastern Point Road, Groton, Connecticut 06340, US
(74) Rudge, Andrew John, Pfizer Limited, European Patent Department, Ramsgate Road, Sandwich CT13 9NJ, GB

**(51) (8)** **EP 2331549 ***
***C 07D 493/18***
***C 07H 19/01***
(30) FR 16.09.2008. 0805062
(86) PCT/FR2009051729 15.09.2009.
(96) EP 09748389.5 15.09.2009. Fr
(87) WO2010031953 25.03.2010. 201012
(97) EP 2331549 15.06.2011. 201124 Fr
**(54) METHOD FOR PREPARING 1,6:2,3-DIANHYDRO-BETA-D-MANNOPYRANOSE**
(71) Sanofi-Aventis, 174 Avenue de France, 75013 Paris, FR
(72) GROSSI, Pierre, Jean, c/o Sanofi-Aventis, Département Brevets, 174 Avenue de France, F-75013 Paris, FR;
HOFF, Christian, c/o Sanofi-Aventis, Département Brevets, 174 Avenue de France, F-75013 Paris, FR;
ROVERA, Jean-Claude, c/o Sanofi-Aventis, Département Brevets, 174 Avenue de France, F-75013 Paris, FR;
SOLE, Raphaël, c/o Sanofi-Aventis, Département Brevets, 174 Avenue de France, F-75013 Paris, FR
(74) Tanguy, Yannick, et al, Cabinet Lavoix, 2, place d'Estienne d'Orves, FR-75441 Paris Cedex 09, FR

**(51) (8)** **EP 2331550 ***
***C 07D 493/18***
***C 07H 19/01***
(30) FR 16.09.2008. 0805063
(86) PCT/FR2009051730 15.09.2009.
(96) EP 09748390.3 15.09.2009. Fr
(87) WO2010031954 25.03.2010. 201012
(97) EP 2331550 15.06.2011. 201124 Fr
**(54) SHORT SYNTHETIC PATHWAY FOR 1,6:2,3-DIANHYDRO-BETA-D-MANNOPYRANOSE**
(71) Sanofi-Aventis, 174 Avenue de France, 75013 Paris, FR
(72) BOUVENOT, Laurent, c/o Sanofi-Aventis, Département Brevets, 174 avenue de France, F-75013 Paris, FR;
CRUCIANI, Paul, c/o Sanofi-Aventis, Département Brevets, 174 avenue de France, F-75013 Paris, FR;
LARGEAU, Denis, c/o Sanofi-Aventis, Département Brevets, 174 avenue de France, F-75013 Paris, FR;
ROVERA, Jean-Claude, c/o Sanofi-Aventis, Département Brevets, 174 avenue de France, F-75013 Paris, FR
(74) Tanguy, Yannick, et al, Cabinet Lavoix, 2, place d'Estienne d'Orves, FR-75441 Paris Cedex 09, FR

**(51) (8)** **EP 2328902 ***
***C 07D 498/04***
***A 61K 31/424***
***A 61P 43/00***
(30) EP 06.08.2008. 08161930
EP 14.01.2009. 09150553
US 14.01.2009. 205096 P
(86) PCT/EP2009060094 04.08.2009.
(96) EP 09804561.0 04.08.2009. En
(87) WO2010015628 11.02.2010. 201006
(97) EP 2328902 08.06.2011. 201123 En
**(54) PYRAZOLO [5,1-B]OXAZOLE DERIVATIVES AS CRF1 ANTAGONISTS**
(71) Novartis AG, Lichtstrasse 35, 4056 Basel, CH
(72) BRUCE, Ian, Novartis Horsham Research Centre, Wimblehurst Road, Horsham, West Sussex Sussex RH12 5AB, GB;
CULSHAW, Andrew James, Novartis Horsham Research Centre, Wimblehurst Road, Horsham, West Sussex Sussex RH12 5AB, GB;
DEVEREUX, Nicholas James, Novartis Horsham Research Centre, Wimblehurst Road, Horsham, West Sussex Sussex RH12 5AB, GB;
GESSIER, François, Novartis Pharma AG, Postfach, CH-4002 Basel, CH;
MCKENNA, Jeffrey, Novartis Horsham Research Centre, Wimblehurst Road, Horsham, West Sussex Sussex RH12 5AB, GB;
NEEF, James, Novartis Horsham Research Centre, Wimblehurst Road, Horsham, West Sussex Sussex RH12 5AB, GB;
OAKMAN, Helen Elizabeth, Novartis Horsham Research Centre, Wimblehurst Road, Horsham, West Sussex Sussex RH12 5AB, GB
(74) Mueller, Philippe, Novartis Pharma AG, Patent Department, 4002 Basel, CH

**(51) (8)** **EP 2328903** *
***C 07D 498/10***
***C 07D 513/10***
***A 61K 31/424***
***A 61K 31/429***
***A 61P 25/28***
(30) US 11.09.2008. 96082 P
(86) PCT/US2009056748 11.09.2009.
(96) EP 09737222.1 11.09.2009. En
(87) WO2010030954 18.03.2010. 201011
(97) EP 2328903 08.06.2011. 201123 En
**(54) SPIRO-TETRACYCLIC RING COMPOUNDS AS BETASECRETASE MODULATORS AND METHODS OF USE**
(71) Amgen Inc., One Amgen Center Dr., Thousand Oaks, California 93012, US
(72) WHITE, Ryan, 34 Willow Avenue Unit 1, Somerville, Massachusetts 02144, US;
AMEGADZIE, Albert, 13198 Westcott Court, Moorpark, California 93021, US;
BRYAN, Marian C., 24001 Victory Blvd., West Hills, California 91307, US;
CHEN, Jian J., 5448 Castillo De Rosa, Newbury Park, California 93012, US;
CHENG, Alan C., 1484 16th Avenue, San Francisco, CA 94122, US;
DINEEN, Thomas, 36 Waterhouse Street, Somerville, Massachusetts 02144, US;
EPSTEIN, Oleg, 44 Trowbridge St., Belmont, Massachusetts 02478, US;
GORE, Vijay Keshav, 255 Via Mirabella, Apt 214, Thousand Oaks, California 91320, US;
HUA, Zihao, 11 Old Boston Road 311, Tewksbury, Massachusetts 01876, US;
HUMAN, Jason B., 901 Beacon Street Apt. 5, Boston, Massachusetts 02215, US;
HUANG, Hongbing, 11 Rockville Avenue, Lexington, Massachusetts 02421, US;
KREIMAN, Charles, 49 Boyston Street, Watertown, Massachusetts 02472, US;
LA, Daniel, 124 Park St. 3, Brookline, Massachusetts 02446, US;
LIU, Qingyian, 4631 Paseo Girasol, Camarillo, California 93012, US;
MA, Vu Van, 1739 Sunbeam Lane, Simi Valley, California 93065, US;
MARX, Isaac, 12 Evergreen Square Apt. 1, Somerville, Massachusetts 02143, US;
PATEL, Vinod F., 3 Mossy Lane, Acton, Massachusetts 01720, US;
QIAN, Wenyuan, 3872 Fountain Street, Camarillo, California 93012, US;
WEISS, Matthew, 171 Malborough Street 1, Boston, Massachusetts 02116, US;
YUAN, Chester C., 1416 Geyser Ct., Newbury Park, California 91320, US
(74) Grünecker, Kinkeldey, Stockmair & Schwanhäusser, Anwaltssozietät, Leopoldstrasse 4, 80802 München, DE

**(51) (8)** **EP 2327706**
***C 07D 498/22***
(96) EP 09177490.1 30.11.2009. En
(97) EP 2327706 01.06.2011. 201122 En
**(54) Polymorphous forms III and IV of N-benzoyl-staurosporine**
(71) Novartis AG, Lichtstrasse 35, 4056 Basel, CH
(72) The designation of the inventor has not yet been filed
(74) Gruber, Markus, Novartis Pharma AG, Patent Department, 4002 Basel, CH

**(51) (8)** **EP 2341053**
***C 07D 505/24***
***A 61K 31/5365***
***A 61K 31/546***
***A 61K 31/55***
***A 61P 31/04***
***C 07D 501/46***
***C 07D 519/06***
(30) JP 31.10.2008. 2008280828
(86) PCT/JP2009068400 27.10.2009.
(96) EP 09823578.1 27.10.2009. Ja
(87) WO2010050468 06.05.2010. 201018
(97) EP 2341053 06.07.2011. 201127 En
**(54) CEPHALOSPORIN HAVING CATECHOL GROUP**
(71) Shionogi&Co., Ltd., 1-8, Doshomachi 3-chome, Chuo-ku, Osaka-shi, Osaka-shi, Osaka 5410045, JP
(72) NISHITANI, Yasuhiro, c/o Shionogi&Co. Ltd., 12-4, Sagisu 5-chome, Fukushima-ku, Osaka-shi, Osaka 553-0002, JP;
YAMAWAKI, Kenji, c/o Shionogi&Co. Ltd., 12-4, Sagisu 5-chome, Fukushima-ku, Osaka-shi, Osaka 553-0002, JP;
TAKEOKA, Yusuke, c/o Shionogi&Co. Ltd., Shionogi Innovation Center for Drug Discovery, North 21, West 11, Kita-ku, Sapporo-shi, Hokkaido 001-0021, JP;
SUGIMOTO, Hideki, c/o Shionogi&Co. Ltd., 12-4, Sagisu 5-chome, Fukushima-ku, Osaka-shi, Osaka 553-0002, JP;
HISAKAWA, Shinya, c/o Shionogi&Co. Ltd., 12-4, Sagisu 5-chome, Fukushima-ku, Osaka-shi, Osaka 553-0002, JP;
AOKI, Toshiaki, c/o Shionogi&Co. Ltd., 12-4, Sagisu 5-chome, Fukushima-ku, Osaka-shi, Osaka 553-0002, JP
(74) Webster, Jeremy Mark, Mewburn Ellis LLP, 33 Gutter Lane, London, EC2V 8AS, GB

**(51) (8)** **EP 2332943**
***C 07D 513/04***
***A 61K 31/542***
***A 61P 25/00***
***A 61P 25/28***
***A 61P 43/00***
(30) JP 30.09.2008. 2008252062
US 30.09.2008. 101359 P
JP 17.04.2009. 2009100457
US 17.04.2009. 170179 P
JP 17.07.2009. 2009168490
US 17.07.2009. 226365 P
(86) PCT/JP2009066728 28.09.2009.
(96) EP 09817719.9 28.09.2009. Ja
(87) WO2010038686 08.04.2010. 201014
(97) EP 2332943 15.06.2011. 201124 En
**(54) NOVEL FUSED AMINODIHYDROTHIAZINE DERIVATIVE**
(71) Eisai R&D Management Co., Ltd., 6-10, Koishikawa 4-chome, Bunkyo-ku, Tokyo 112-8088, JP
(72) MOTOKI Takafumi, c/o Tsukuba Research Laboratories, Eisai Co. Ltd., 1-3 Tokodai 5-chome, Tsukuba-shi, Ibaraki 300-2635, JP;

TAKEDA Kunitoshi, c/o Tsukuba Research Laboratories, Eisai Co. Ltd., 1-3 Tokodai 5-chome, Tsukuba-shi, Ibaraki 300-2635, JP;
KITA Yoichi, c/o Tsukuba Research Laboratories, Eisai Co. Ltd., 1-3 Tokodai 5-chome, Tsukuba-shi, Ibaraki 300-2635, JP;
TAKAISHI Mamoru, c/o Tsukuba Research Laboratories, Eisai Co. Ltd., 1-3 Tokodai 5-chome, Tsukuba-shi, Ibaraki 300-2635, JP;
SUZUKI Yuichi, c/o Tsukuba Research Laboratories, Eisai Co. Ltd., 1-3 Tokodai 5-chome, Tsukuba-shi, Ibaraki 300-2635, JP;
ISHIDA Tasuku, c/o Tsukuba Research Laboratories, Eisai Co. Ltd., 1-3 Tokodai 5-chome, Tsukuba-shi, Ibaraki 300-2635, JP
(74) HOFFMANN EITLE, Patent- und Rechtsanwälte, Arabellastraße 4, 81925 München, DE

**(51) (8)** **EP 2058317**
***C 07F 9/09***
***A 61K 31/661***
***A 61P 1/04***
***A 61P 1/16***
***A 61P 3/10***
***A 61P 7/02***
***A 61P 9/04***
***A 61P 9/10***
***A 61P 11/00***
***A 61P 11/02***
***A 61P 11/06***
***A 61P 13/12***
***A 61P 17/00***
***A 61P 17/02***
***A 61P 21/04***
***A 61P 25/00***
***A 61P 27/14***
***A 61P 29/00***
***A 61P 31/04***
***A 61P 35/00***
***A 61P 37/02***
(30) JP 08.08.2006. 2006215280
(86) PCT/JP2007065397 07.08.2007.
(96) EP 07792066.8 07.08.2007. Ja
(87) WO2008018427 14.02.2008. 200807
(97) EP 2058317 13.05.2009. 200920 En
**(54) AMINOPHOSPHORIC ACID ESTER DERIVATIVE AND S1P RECEPTOR MODULATOR CONTAINING THE SAME AS ACTIVE INGREDIENT**
(71) Kyorin Pharmaceutical Co., Ltd., 5, Kanda Surugadai 2-chome, Chiyoda-ku, Tokyo 101-8311, JP
(72) KOHNO, Yasushi, c/o Discovery Research Laboratories, Kyorin Pharmaceutical Co., Ltd., 2399-1, Nogi, Nogi-machi, Shimotsuga-gun, Tochigi 329-0114, JP;
FUJII, Kiyoshi, c/o Discovery Research Laboratories, Kyorin Pharmaceutical Co., Ltd., 2399-1, Nogi, Nogi-machi, Shimotsuga-gun, Tochigi 329-0114, JP;
SAITO, Tatsuhiro, c/o Discovery Research Laboratories, Kyorin Pharmaceutical Co., Ltd., 2399-1, Nogi, Nogi-machi, Shimotsuga-gun, Tochigi 329-0114, JP
(74) Vossius & Partner, Siebertstrasse 4, 81675 München, DE

**(51) (8)** **EP 2256124**
***C 07F 9/6561***
***A 61K 31/675***
(30) US 17.09.2004. 611061 P
US 25.08.2005. 711445 P
US 26.08.2005. 711565 P
(96) EP 10174740.0 16.09.2005. En
(97) EP 2256124 01.12.2010. 201048 En
**(54) Phospho-indoles as HIV inhibitors**
(71) IDENIX Pharmaceuticals, Inc., One Kendall Square, Building 1400, Cambridge, MA 02139, US
(72) Storer, Richard, Sandgate Point, The Leas, Folkestone, kent CT20 2JE, GB;
Dousson, Cyril, 15, Lotissement La Source 1, F-34800, Canet, FR;
Alexandre, Francois-René, Résidence Occitanie Bat. 4 200 avenue du Major, Flandre, F-34090, Montpellier, FR;
Roland, Arlne, 10 rue des Berberis, F-34590, Marsillargues, FR
(74) Howard, Paul Nicholas, Carpmaels & Ransford, One Southampton Row, London, WC1B 5HA, GB

**(51) (8)** **WO 2010043682**
***C 07H 7/04***
***C 07H 13/04***
***C 07C 1/00***
(30) US 17.10.2008. 106231 P
US 17.10.2008. 106260 P
US 14.10.2009. 578934
(86) PCT/EP2009063503 15.10.2009.
(96) WO 09736928.4 15.10.2009. En
(87) WO2010043682 22.04.2010. 201016
(97) WO 2010043682 22.04.2010. 201016 En
**(54) PROCESS FOR THE PREPARATION OF COMPOUNDS USEFUL AS INHIBITORS OF SGLT**
(71) Janssen Pharmaceutica, N.V., Turnhoutseweg 30, 2340 Beerse, BE;
Mitsubishi Tanabe Pharma Corporation, 2-6-18 Kitahama, Chuo-Ku, Osaka-shi, Osaka 541-8505, JP
(72) FILLIERS, Walter Ferdinand Maria, c/o Janssen Pharmaceutica NV, Turnhoutseweg 30, B-2340 Beerse, BE;
BROECKX, Rudy Laurent Maria, c/o Janssen Pharmaceutica NV, Turnhoutseweg 30, B-2340 Beerse, BE;
NIESTE, Patrick Hubert J., c/o Janssen Pharmaceutica NV, Turnhoutseweg 30, B-2340 Beerse, BE;
HATSUDA, Masanori, c/o MITSUBISHI TANABE PHARMA CORPORATION, 2-6-18, Kitahama Chuo-ku, Osaka 541-8505, JP;
YOSHINAGA, Masahiko, c/o MITSUBISHI TANABE PHARMA CORPORATION, 2-6-18, Kitahama Chuo-ku, Osaka 541-8505, JP;
YADA, Mitsuhiro, c/o MITSUBISHI TANABE PHARMA CORPORATION, 2-6-18, Kitahama Chuo-ku, osaka 541-8505, JP;
TELEHA, Christopher, c/o Johnson and Johnson Pharmaceutical R&D, Welsh and McKean Roads, Spring House, PA 19477-0776, US
(74) Warner, James Alexander, Carpmaels & Ransford, One Southampton Row, London, WC1B 5HA, GB

**(51) (8)** **EP 2340256 ***
***C 07H 21/00***
***C 40B 40/08***
(30) US 30.09.2008. 101483 P
(86) PCT/US2009059059 30.09.2009.
(96) EP 09818451.8 30.09.2009. En
(87) WO2010039852 08.04.2010. 201014
(97) EP 2340256 06.07.2011. 201127 En

**(54) IMPROVED ANTIBODY LIBRARIES**
(71) Abbott Laboratories, 100 Abbott Park Road, Abbott Park, Illinois 60064-3500, US
(72) HSIEH, Chung-Ming, 22 Olde Field Road, Newton, MA 02459-2733, US;
KUTSKOVA, Yuliya, A., 183 Whitney Street, Northborough, MA 01532, US;
MEMMOTT, John, E., 10 Cody Road, Framingham, MA 01701, US
(74) Modiano, Micaela Nadia, et al, Modiano & Partners, Thierschstrasse 11, 80538 München, DE

**(51) (8)** **EP 2125869 ***
***C 07K 5/00***
***A 61K 38/16***
(30) US 18.01.2007. 885562 P
US 14.08.2007. 955712 P
US 01.05.2007. 915358 P
(86) PCT/US2008000621 17.01.2008.
(96) EP 08724582.5 17.01.2008. En
(87) WO2008088846 24.07.2008. 200830
(97) EP 2125869 02.12.2009. 200949 En
**(54) SUBSTANCE P AND ANALOGS THEREOF AS AN IMMUNOGENIC COMPOSITION ADJUVANT**
(71) Immuneregen Biosciences, Inc., 8767 Via De Ventura, Suite 190, Scottsdale, AZ 85258, US
(72) SIEGEL, Hal, 7111 E. McDonald Drive, Paradise Valley, AZ 85253-5406, US

**(51) (8)** **EP 2331564 ***
***C 07K 7/08***
***C 07K 14/00***
***A 61K 38/10***
***A 61K 38/16***
***A 61P 31/00***
(30) US 06.10.2008. 103182 P
US 12.11.2008. 113979 P
US 17.11.2008. 115450 P
US 01.12.2008. 118938 P
US 11.12.2008. 121779 P
(86) PCT/US2009059739 06.10.2009.
(96) EP 09819777.5 06.10.2009. En
(87) WO2010042548 15.04.2010. 201015
(97) EP 2331564 15.06.2011. 201124 En
**(54) METHODS OF TREATING INFLAMMATION**
(71) Carolus Therapeutics, Inc., 888 Prospect Street, Suite 320, La Jolla, CA 92037, US
(72) SCHULTZ, Joshua Robert, 5 Brook Hollow Road, Ballston Lake, New York 12019, US;
VOLLRATH, Benedikt, 4704 Niagara Avenue, San Diego, California 92107, US;
TURNER, Court, 7379 Rancho Ventana Trail, San Diego, California 92127, US
(74) Cole, William Gwyn, et al, HLBBshaw, Merlin House, Falconry Court, Baker's Lane, Epping, Essex CM16 5DQ, GB

**(51) (8)** **EP 2338902**
***C 07K 14/26***
***C 07K 16/12***
***A 61K 39/395***
***A 61P 31/04***
(30) EP 02.05.2007. 07107344
(96) EP 10010873.7 29.04.2008. En
(97) EP 2338902 29.06.2011. 201126 En
**(54) Klebsiella antigens**
(71) Intercell AG, Campus Vienna Biocenter 3, 1030 Vienna, AT
(72) Bakshi, Sharmila, 23 Ebrington Rd., Kenton, Harrow, HA3 0LR Middlesex, GB;
Cipps, Thomas, Hüttergasse 2/5, 1140 Vienna, AT;
Hanner, Markus, Terrassengasse 12, 3013 Pressbaum, AT;
Pikalo, Jutta, Weizelsdorf 112, 9162 Strau, AT;
Satke, Christina, Marchettigasse 7/23, 1060 Vienna, AT;
Nagy, Eszter, Westbahnstrasse 32/34, 1070 Vienna, AT;
Lundberg, Urban, Badgasse 1a/1/02, 3013 Pressbaum, AT;
Wakefield, Dagmar, Byron Bay, Lennox Head, NSW 2483 Ocean Shores, AU;
Meinke, Andreas, Piettegasse 26/1, 3013 Pressbaum, AT;
Noiges, Birgit, Schönbrunnerstrasse 100/20, 1050 Vienna, AT;
Stierschneider, Ulrike, Kaiserstrasse 66/2/14, 1070 Vienna, AT;
VON Gabain, Alexander, Hockegasse 72, 1180 Vienna, AT
(74) Bösl, Raphael Konrad, Isenbruck Bösl Hörschler LLP, Patentanwälte, Prinzregentenstrasse 68, 81675 München, DE

**(51) (8)** **EP 2337790 ***
***C 07K 14/33***
(30) EP 29.08.2008. 08015287
US 29.08.2008. 190558 P
(86) PCT/EP2009006272 28.08.2009.
(96) EP 09778201.5 28.08.2009. En
(87) WO2010022979 04.03.2010. 201009
(97) EP 2337790 29.06.2011. 201126 En
**(54) CLOSTRIDIAL NEUROTOXINS WITH ALTERED PERSISTENCY**
(71) Merz Pharma GmbH & Co. KGaA, Eckenheimer Landstrasse 100, 60318 Frankfurt Main, DE
(72) FREVERT, Juergen, Weimarerstrasse 6, 10625 Berlin, DE
(74) Ricker, Mathias, Wallinger Ricker Schlotter Foerstl, Patent- und Rechtsanwälte, Zweibrückenstraße 5-7, 80331 München, DE

**(51) (8)** **EP 2334695 ***
***C 07K 14/435***
***C 07H 21/00***
***A 61K 38/00***
(30) US 01.10.2008. 101905 P
(86) PCT/US2009059268 01.10.2009.
(96) EP 09818521.8 01.10.2009. En
(87) WO2010039985 08.04.2010. 201014
(97) EP 2334695 22.06.2011. 201125 En
**(54) THERAPEUTIC RIBONUCLEASES**
(71) Quintessence Biosciences, Inc., 505 South Rosa Road, Madison, WI 53719, US
(72) KLINK, Tony, 314 Westmorland Blvd., Madison, Wisconsin 53705, US;
KINK, John, 110 Wolf Street, Madison, Wisconsin 53717, US;
STRONG, Laura, 1285 Woodsview Circle, Stoughton, Wisconsin 53589, US
(74) Glawe, Delfs, Moll, Patent- und Rechtsanwälte, Rothenbaumchaussee 58, 20148 Hamburg, DE

**(51) (8)** **EP 2113513**
***C 07K 14/47***
(30) JP 25.06.2004. 2004187671

JP 15.12.2004. 2004363311
(96) EP 09075257.7 23.06.2005. En
(97) EP 2113513 04.11.2009. 200945 En
**(54) Metastin derivatives and use thereof**
(71) Takeda Pharmaceutical Company Limited, 1-1, Doshomachi 4-chome, Chuo-ku, Osaka 541, JP
(72) Kitada, Chieko, 2-8, Minamikoyo-cho 1-cho, Sakai-ku, Sakai-shi, Osaka 590-0073, JP;
Asami, Taiji, c/o Takeda Pharmaceutical Company Ltd., 10, Wadai, Tsukuba-shi, Ibaraki 300-4293, JP;
Nishizawa, Naoki, c/o Takeda Pharmaceutical Company Ltd., 10, Wadai, Tsukuba-shi, Ibaraki 300-4293, JP
(74) Wright, Robert Gordon McRae, Elkington and Fife LLP, Prospect House, 8 Pembroke Road, Sevenoaks, Kent TN13 1XR, GB

**(51) (8)** **EP 2138509**
***C 07K 14/47***
***A 61K 39/00***
(30) EP 05.09.2005. 05019254
(96) EP 09011317.6 05.09.2006. En
(97) EP 2138509 30.12.2009. 200953 En
**(54) Tumor-associated peptide binding promiscuously to human leukocyte antigen (HLA) class II molecules**
(71) Immatics Biotechnologies GmbH, Paul-Ehrlich-Strasse 15, 72076 Tübingen, DE
(72) Dengjel, Jörn, Fengersvej 27, 5230 Odense, DK
(74) Krauss, Jan, Forrester & Boehmert, Pettenkoferstrasse 20-22, 80336 München, DE

**(51) (8)** **EP 2324055** *
***C 07K 14/47***
(30) US 25.08.2008. 91705 P
US 01.04.2009. 165652 P
US 25.08.2008. 91694 P
US 25.08.2008. 91709 P
US 05.01.2009. 142548 P
US 25.08.2008. 91502 P
(86) PCT/US2009054971 25.08.2009.
(96) EP 09791915.3 25.08.2009. En
(87) WO2010027828 11.03.2010. 201010
(97) EP 2324055 25.05.2011. 201121 En
**(54) PD-1 ANTAGONISTS AND METHODS OF USE THEREOF**
(71) Amplimmune, Inc., 9800 Medical Center Drive, Suite C-120, Rockville, MD 20850, US
(72) LANGERMANN, Solomon, 6606 Cross Country Blvd., Baltimore, MD 21215, US;
LIU, Linda, 6512 Tipperary Court, Clarksville, MD 21029, US
(74) Chiappinelli, Susan Ann, GlaxoSmithKline, Corporate Intellectual Property, 980 Great West Road (CN925.1), Brentford, Middlesex TW8 9GS, GB

**(51) (8)** **EP 2338907**
***C 07K 14/47***
***A 61K 39/00***
(30) EP 27.07.2007. 07014797
US 31.07.2007. 953161 P
(96) EP 10014673.7 25.07.2008. En
(97) EP 2338907 29.06.2011. 201126 En
**(54) Novel immunogenic epitopes for immunotherapy**
(71) Immatics Biotechnologies GmbH, Paul-Ehrlich-Strasse 15, 72076 Tübingen, DE
(72) Singh, Harpreet, Bei den Pferdeställen 9, 72072 Tübingen, DE;
Schoor, Oliver, Charlottenstrasse 21, 72070 Tübingen, DE;
Trautwein, Claudia, Nelkenweg 2, 42489 Wülfrath, DE;
Hilf, Norbert, Im Wengertacker 17, 72138 Kirchentellinsfurt, DE;
Weinschenk, Toni, Im Morgenrain 15, 73773 Aichenwald, DE;
Walter, Steffen, Steinenbergstrasse 2, 72764 Reutlingen, DE;
Lewandrowski, Peter, Burgstr. 14, 7270 Tübingen-Hirschau, DE
(74) Krauss, Jan, Forrester & Boehmert, Pettenkoferstrasse 20-22, 80336 München, DE

**(51) (8)** **EP 2342220** *
***C 07K 14/47***
***A 61K 39/00***
***A 61K 39/395***
***A 61P 37/04***
***C 07K 14/00***
***C 07K 16/00***
***C 07K 16/18***
***C 07K 7/06***
***G 01N 33/53***
***G 06F 19/00***
***C 04B 30/02***
***G 01N 33/68***
(30) US 06.10.2008. 136815 P
US 02.03.2009. 156807 P
(86) PCT/CA2009001413 06.10.2009.
(96) EP 09818707.3 06.10.2009. En
(87) WO2010040209 15.04.2010. 201015
(97) EP 2342220 13.07.2011. 201128 En
**(54) METHODS AND SYSTEMS FOR PREDICTING MISFOLDED PROTEIN EPITOPES**
(71) THE UNIVERSITY OF BRITISH COLUMBIA, No. 103-6190 Agronomy Road, Vancouver, British Columbia V6T 1Z3, CA
(72) CASHMAN, Neil R., 3793 West King Edward Avenue, Vancouver, British Columbia V6S 1M8, CA;
PLOTKIN, Steven S., 408 - 908 West 7th Avenue, Vancouver, British Columbia V5Z 1C3, CA;
GUEST, William C., 304 - 2680 Arbutus Street, Vancouver, British Columbia V6J 5L8, CA
(74) Atkinson, Jennifer, Barker Brettell LLP, 100 Hagley Road, Edgbaston, Birmingham, B16 8QQ, GB

**(51) (8)** **EP 2342223** *
***C 07K 14/505***
***C 12N 15/11***
***C 12N 15/16***
***C 12N 5/10***
***C 12P 21/02***
***A 61P 7/06***
(30) US 26.09.2008. 100679 P
US 26.09.2008. 100692 P
(86) PCT/US2009058482 25.09.2009.
(96) EP 09816953.5 25.09.2009. En
(87) WO2010036964 01.04.2010. 201013
(97) EP 2342223 13.07.2011. 201128 En
**(54) MODIFIED ANIMAL ERYTHROPOIETIN POLYPEPTIDES AND THEIR USES**
(71) Ambrx, Inc., 10975 North Torrey Pines Road, Suite 100, La Jolla, CA 92037, US;

ELI LILLY AND COMPANY, Lilly Corporate Center, Indianapolis, IN 46285, US
(72) TIAN, Feng, 9003 Buckwheat Street, San Diego, CA 92129, US;
HAYS PUTNAM, Anna-Maria, A., 11522 Cesped Drive, San Diego, CA 92124, US;
SONG, Frank, 12016 Caminito Campana, San Diego, CA 92128, US;
CHU, Stephanie, 4220 Porte De Palmas 34, San Diego, CA 92122, US;
SHEFFER, Joseph, 2549 Montgomery Avenue, Cardiff, CA 92007, US;
BARNETT, Richard, S., 306 Belmont Court, San Marcos, CA 92069, US;
SILADI, Marc, 4077 Illinois Street 1, San Diego, CA 92104, US;
ATKINSON, Kyle, 12580 Caminito Mira Del Mar, San Diego, CA 92130, US;
LEE, Darin, 3187 Cowley Way Unit 263, San Diego, CA 92117, US;
CANNING, Peter, C., 6652 Braemar Avenue, Noblesville, IN 46062, US
(74) Hallybone, Huw George, Carpmaels & Ransford, One Southampton Row, London, WC1B 5HA, GB

**(51) (8)** **EP 2331568 ***
***C 07K 14/52***
***A 61M 1/36***
***B 01J 20/32***
(30) SE 10.09.2008. 0801938
(86) PCT/GB2009002196 10.09.2009.
(96) EP 09785106.7 10.09.2009. En
(87) WO2010029317 18.03.2010. 201011
(97) EP 2331568 15.06.2011. 201124 En
**(54) TREATING INFLAMMATORY CONDITIONS**
(71) Ibd Column Therapies International AB, Unit L2:04, Karolinska University Hospital Solna, 171 76 Stockholm, SE
(72) WINQVIST, Ola, Svankärrsvägen 32 F, S-75 653 Uppsala, SE;
COTTON, Graham, 18 Dreghorn Park, Edinburgh EH13 9PH, GB
(74) Spencer, Matthew Peter, Boult Wade Tennant, Verulam Gardens, 70 Gray's Inn Road, London WC1X 8BT, GB

**(51) (8)** **EP 2325201**
***C 07K 14/54***
(30) US 26.11.2003. 525279 P
(96) EP 10177394.3 26.11.2004. En
(97) EP 2325201 25.05.2011. 201121 En
**(54) Use of il-6-type Cytokines for maturation of Oocytes**
(71) Merck Serono SA, Centre Industriel, 1267 Coinsins, Vaud, CH
(72) Clark, Ann M., 587 Broad Street, Weymouth, MA 02189, US;
De Matos, Daniel Gustavo, 68 Chappel Street, Pembroke, MA 02359, US;
Jackson, Jennifer A., 137 Gorham Street, Chelmsford, MA 01824, US;
Palmer, Stephen S., 81 Boston Road, Groton, MA 01450, US;
Tran, Cam Anh T., 186 Summit Ave, Apt. 4, Quincy, MA 02170, US
(74) Sutcliffe, Nicholas Robert, Mewburn Ellis LLP, 33 Gutter Lane, London, EC2V 8AS, GB

**(51) (8)** **EP 2328922 ***
***C 07K 14/62***
***C 07K 14/46***
(30) US 07.08.2008. 188191 P
US 02.12.2008. 200629 P
(86) PCT/US2009004552 07.08.2009.
(96) EP 09805293.9 07.08.2009. En
(87) WO2010016940 11.02.2010. 201006
(97) EP 2328922 08.06.2011. 201123 En
**(54) ANALOGUES OF GLUCOSE-DEPENDENT INSULINOTROPIC POLYPEPTIDE**
(71) IPSEN PHARMA S.A.S., 65, Quai Georges Gorse, 92100 Boulogne-Billancourt, FR
(72) DONG, Zheng, Xin, 66 Fairview Street, Holliston, MA 01746, US
(74) Wells, Andrew, Harrison Goddard Foote, 4th Floor, Merchant Exchange, 17-19 Whitworth Street West, Manchester M1 5WG, GB

**(51) (8)** **EP 2294083 ***
***C 07K 14/715***
(30) GB 23.04.2008. 0807413
(86) PCT/GB2009001026 22.04.2009.
(96) EP 09735498.9 22.04.2009. En
(87) WO2009130459 29.10.2009. 200944
(97) EP 2294083 16.03.2011. 201111 En
**(54) EPITOPES OF IL-17A AND IL-17F AND ANTIBODIES SPECIFIC THERETO**
(71) UCB Pharma S.A., Allée de la Recherche 60, 1070 Brussels, BE
(72) CESKA, Thomas, Allen, UCB Celltech, 208 Bath Road, Slough, Berkshire SL1 3WE, GB;
HENRY, Alistair, James, UCB Celltech, 208 Bath Road, Slough, Berkshire SL1 3WE, GB;
SHI, Jijye, 755 Jefferson Road, Rochester, NY 14623, GB
(74) Blanchard, Amanda Jane, UCB Celltech, IPD, 208 Bath Road, Slough, Berkshire SL1 3WE, GB

**(51) (8)** **EP 2331569 ***
***C 07K 14/755***
***C 07K 14/745***
***A 61K 38/00***
(30) US 21.08.2008. 136250 P
EP 21.08.2008. 08162765
(86) PCT/EP2009060829 21.08.2009.
(96) EP 09782080.7 21.08.2009. En
(87) WO2010020690 25.02.2010. 201008
(97) EP 2331569 15.06.2011. 201124 En
**(54) RECOMBINANTLY PRODUCED HUMAN FACTOR VIII AND IX**
(71) Octapharma AG, Seidenstrasse 2, 8853 Lachen, CH
(72) SANDBERG, Helena, Igelkottsvägen 21, S-167 56 Bromma, SE;
STENLUND, Peter, Björkvägen 24, S-167 56 Bromma, SE;
SCHRÖDER, Carola, Ettaler Strasse 45, 82061 Neuried, DE;
CASADEMUNT, Elisabeth, Planegger Strasse 140, 81241 München, DE;
TIEMEYER, Maya, Lilly-Reich-Strasse 6, 80807 München, DE
(74) von Kreisler Selting Werner, Patentanwälte, Deichmannhaus am Dom, Bahnhofsvorplatz 1, 50667 Köln, DE

**(51) (8)** **EP 2331571** *
***C 07K 16/00***
(30) US 18.09.2008. 98088 P
(86) PCT/US2009057401 18.09.2009.
(96) EP 09815233.3 18.09.2009. En
(87) WO2010033757 25.03.2010. 201012
(97) EP 2331571 15.06.2011. 201124 En
**(54) NMDA RECEPTOR MODULATORS AND USES THEREOF**
(71) Naurex, Inc., 6636 Antelope CR, Indianapolis, IN 46278, US
(72) KHAN, Amin, 2 East Oak Street Apt 2201, Chicago, IL 60611, US;
MOSKAL, Joseph, 801 Central Ave, Evanston, IL 60201, US;
WOOD, Paul, 174 Lakeshore Cres, Saskatoon, S7J 3T3, CA
(74) Harris, Jennifer Lucy, et al, Kilburn & Strode LLP, 20 Red Lion Street, London WC1R 4PJ, GB

**(51) (8)** **EP 2331573** *
***C 07K 16/10***
***A 61K 39/395***
(86) PCT/US2008078884 05.10.2008.
(96) EP 08824626.9 05.10.2008. En
(87) WO2010039154 08.04.2010. 201014
(97) EP 2331573 15.06.2011. 201124 En
**(54) HEPATITIS C ANTIBODIES AND USES THEREOF**
(71) The Board of Trustees of, The Leland Stanford Junior University, 1705 El Camino Real, Palo Alto, CA 94306-1106, US
(72) FOUNG, Steven, 588 Mayfield Avenue, Stanford, CA 94305, US;
KECK, Zhen-yong, 617 Harbor County Court, Redwood City, CA 94065, US
(74) Verhage, Richard Abraham, Crucell Holland B.V., IP Department, Archimedesweg 4-6, 2333 CN Leiden, NL

**(51) (8)** **EP 2325208**
***C 07K 16/18***
***C 12N 15/13***
(30) US 15.12.2005. 751081 P
US 21.04.2006. 793980 P
(96) EP 10188648.9 14.12.2006. En
(97) EP 2325208 25.05.2011. 201121 En
**(54) Polyubiquitin antibodies**
(71) Genentech, Inc., 1 DNA Way, South San Francisco CA 94080-4990, US
(72) Gordon, Nathaniel C., c/o Amunix, Inc., 500 Ellis Street, Suite B, Mountain View, CA 94043, US;
Kelley, Robert F., 1029 San Felipe Avenue, San Bruno, CA 94066, US;
Pham, Anh, 400 North Chapel Avenue No. 102, Alhambra, CA 91801, US;
Hymowitz, Sarah, 1050 Francisco Street, San Francisco, CA 94109, US
(74) Kiddle, Simon John, Mewburn Ellis LLP, 33 Gutter Lane, London, EC2V 8AS, GB

**(51) (8)** **EP 2328931** *
***C 07K 16/26***
***G 01N 33/577***
***A 61K 39/395***
***A 61P 7/06***
(30) US 06.08.2008. 86557 P
(86) PCT/US2009052044 29.07.2009.
(96) EP 09790908.9 29.07.2009. En
(87) WO2010017070 11.02.2010. 201006
(97) EP 2328931 08.06.2011. 201123 En
**(54) ANTI-HEPCIDIN-25 SELECTIVE ANTIBODIES AND USES THEREOF**
(71) ELI LILLY AND COMPANY, Lilly Corporate Center, Indianapolis, IN 46285, US
(72) LEUNG, Donmienne, Doen, Mun, Eli Lilly And Company, Lilly Corporate Center, Indianapolis, IN 46285, US;
LUAN, Peng, Eli Lilly And Company, Lilly Corporate Center, Indianapolis, IN 46285, US;
TANG, Ying, Eli Lilly And Company, Lilly Corporate Center, Indianapolis, IN 46285, US;
WITCHER, Derrick, Ryan, Eli Lilly And Company, Lilly Corporate Center, Indianapolis, IN 46285, US;
YACHI, Pia, Pauliina, Eli Lilly And Company, Lilly Corporate Center, Indianapolis, IN 46285, US
(74) Commander, Paul Martin Brial, Eli Lilly and Company Limited, Lilly Research Centre, Erl Wood Manor, Sunninghill Road, GB-Windlesham, Surrey GU20 6PH, GB

**(51) (8)** **EP 2241577**
***C 07K 16/28***
***A 61P 35/02***
***A 61K 39/395***
***C 12N 5/00***
(30) EP 09.08.2007. 07114128
(96) EP 10168244.1 08.08.2008. En
(97) EP 2241577 20.10.2010. 201042 En
**(54) Anti-CD37 antibodies**
(71) Boehringer Ingelheim International GmbH, Binger Strasse 173, 55216 Ingelheim am Rhein, DE
(72) Heider, Karl-Heinz, Boehringer Ingelheim GmbH, Corporate Patents, Binger Strasse 173, 55216 Ingelheim am Rhein, DE;
Borges, Eric, Boehringer Ingelheim GmbH, Corporate Patents, Binger Strasse 173, 55216 Ingelheim am Rhein, DE;
Ostermann, Eilinborg, Boehringer Ingelheim GmbH, Corporate Patents, Binger Strasse 173, 55216 Ingelheim am Rhein, DE
(74) Hammann, Heinz, et al, Boehringer Ingelheim GmbH, Corporate Patents, Binger Strasse 173, 55216 Ingelheim am Rhein, DE

**(51) (8)** **EP 2342227** *
***C 07K 16/28***
***C 07K 16/46***
(30) US 07.11.2008. 112323 P
US 02.06.2009. 183291 P
(86) PCT/EP2009007970 06.11.2009.
(96) EP 09760483.9 06.11.2009. En
(87) WO2010052014 14.05.2010. 201019
(97) EP 2342227 13.07.2011. 201128 En
**(54) TREATMENT OF ACUTE LYMPHOBLASTIC LEUKEMIA**
(71) Micromet AG, Staffelseestrasse 2, 81477 München, DE
(72) ZUGMAIER, Gerhard, Bavariastrasse 9a, 80336 Muenchen, DE;
DEGENHARD, Evelyn, Lenzfriederstr. 14, 80637 M nchen, DE
(74) Vossius & Partner, Siebertstrasse 4, 81675 München, DE

**(51) (8)** **EP 2342228 ***
***C 07K 16/28***
***A 61K 39/395***
***A 61P 37/06***
(30) US 12.09.2008. 96447 P
(86) PCT/IB2009006940 14.09.2009.
(96) EP 09786276.7 14.09.2009. En
(87) WO2010029434 18.03.2010. 201011
(97) EP 2342228 13.07.2011. 201128 En
**(54) PD-1 SPECIFIC ANTIBODIES AND USES THEREOF**
(71) ISIS Innovation Limited, Ewert Place, Ewert House, Summertown, Oxford OX2 7SG, GB
(72) DAVIS, Simon, Nuffield Department Of Medicine, University Of Oxford, Oxford OX3 9DU, GB
(74) Gallois, Valérie, Cabinet BECKER & ASSOCIES, 25, rue Louis Le Grand, 75002 Paris, FR

**(51) (8)** **EP 2342231 ***
***C 07K 16/28***
***C 07K 16/46***
(30) EP 26.09.2008. 08016952
EP 02.04.2009. 09004908
(86) PCT/EP2009006782 21.09.2009.
(96) EP 09815644.1 21.09.2009. En
(87) WO2010034441 01.04.2010. 201013
(97) EP 2342231 13.07.2011. 201128 En
**(54) BISPECIFIC ANTI-EGFR/ANTI-IGF-1R ANTIBODIES**
(71) Roche Glycart AG, Wagistrasse 18, 8952 Schlieren-Zuerich, CH
(72) BRINKMANN, Ulrich, Feichtlstrasse 12, 82362 Weilheim, DE;
CROASDALE, Rebecca, Im Seefeld 39, 82387 Antdorf, DE;
LAU, Wilma, Rothbuchenstrasse 25, 81547 München, DE;
GERDES, Christian, Sandfelsenstrasse 4, CH-8703 Erlenbach, CH;
HOFFMANN, Eike, Kienbachstrasse 1B, 82211 Herrsching a. Ammersee, DE;
KLEIN, Christian, Chruezacherweg 41, 8906 Bonstetten, CH;
KUENKELE, Klaus-Peter, Karwendelstrasse 9, 83671 Benediktbeuern, DE;
SCHAEFER, Wolfgang, Tannhaeuserring 190, 68199 Mannheim, DE;
STRACKE, Jan Olaf, Bruneckerstrasse 7, 81373 München, DE;
UMANA, Pablo, Fuhrstrasse 24a, CH-8820 Waedenswil, CH
(74) Burger, Alexander, et al, Roche Diagnostics GmbH, Patent Department (TR-E), Postfach 11 52, 82372 Penzberg, DE

**(51) (8)** **EP 2342233 ***
***C 07K 16/28***
(30) EP 01.10.2008. 08305631
US 01.10.2008. 136772 P
US 29.04.2009. 173743 P
(86) PCT/EP2009062787 01.10.2009.
(96) EP 09744645.4 01.10.2009. En
(87) WO2010037831 08.04.2010. 201014
(97) EP 2342233 13.07.2011. 201128 En
**(54) ANTI CXCR4 ANTIBODIES AND THEIR USE FOR THE TREATMENT OF CANCER**
(71) Pierre Fabre Medicament, 45, Place Abel Gance, 92100 Boulogne-Billancourt, FR
(72) KLINGUER-HAMOUR, Christine, 73 route de chez Diossaz, Les Gottalles, F-74570 Groisy, FR;
GRENIR-CAUSSANEL, Véronique, 1 rue de la Vie de l'Orme, 01430 Saint Martin du Fresne, FR
(74) Warcoin, Jacques, Cabinet Régimbeau, 20, rue de Chazelles, 75847 Paris Cedex 17, FR

**(51) (8)** **EP 2342234 ***
***C 07K 16/30***
(30) EP 16.09.2008. 08016277
US 16.09.2008. 97453 P
(86) PCT/EP2009006704 16.09.2009.
(96) EP 09778564.6 16.09.2009. En
(87) WO2010031551 25.03.2010. 201012
(97) EP 2342234 13.07.2011. 201128 En
**(54) MONOCLONAL ANTIBODIES FOR TREATMENT OF CANCER**
(71) Ganymed Pharmaceuticals AG, Freiligrathstrasse 12, 55131 Mainz, DE;
Johannes Gutenberg-Universität Mainz, Saarstrasse 21, 55122 Mainz, DE
(72) SAHIN, Ugur, Philipp-VON-Zabern-Platz 1, 55116 Mainz, DE;
TÜRECI, Özlem, Philipp-VON-Zabern-Platz 1, 55116 Mainz, DE;
KOSLOWSKI, Michael, Autogenstraße 50, 65933 Frankfurt, DE;
MITNACHT-KRAUS, Rita, Bahnhofstrasse 51a, 61118 Bad Vilbel, DE
(74) Schnappauf, Georg, Dr. Volker Vossius, Patent- und Rechtsanwaltskanzlei, Geibelstrasse 6, 81679 München, DE

**(51) (8)** **EP 2334705 ***
***C 07K 16/46***
***C 07K 16/18***
***C 07K 16/28***
***C 07K 16/24***
(30) GB 26.09.2008. 0817704
GB 26.03.2009. 0905314
(86) PCT/GB2009002310 25.09.2009.
(96) EP 09736624.9 25.09.2009. En
(87) WO2010035012 01.04.2010. 201013
(97) EP 2334705 22.06.2011. 201125 En
**(54) BIOLOGICAL PRODUCTS**
(71) UCB Pharma, S.A., 60, allée de la Recherche, 1070 Brussels, BE
(72) ADAMS, Ralph, UCB Celltech, 208 Bath Road, Slough, Berkshire SL1 3WE, GB;
HANCOCK, Laura, UCB Celltech, 208 Bath Road, Slough, Berkshire SL1 3WE, GB;
HEYWOOD, Sam, Philip, UCB Celltech, 208 Bath Road, Slough, Berkshire SL1 3WE, GB
(74) Blanchard, Amanda Jane, et al, UCB Celltech, 208 Bath Road, Slough, Berkshire SL1 3WE, GB

**(51) (8)** **EP 2324062** *
***C 07K 19/00***
***A 61K 39/155***
***A 61K 39/385***
***A 61P 31/14***
***A 61P 37/04***
***C 07K 14/135***
***C 12N 15/44***
***C 12N 15/62***
(30) US 18.07.2008. 81888 P
(86) PCT/CA2009001021 17.07.2009.
(96) EP 09797331.7 17.07.2009. En
(87) WO2010006447 21.01.2010. 201003
(97) EP 2324062 25.05.2011. 201121 En
**(54) CHIMERIC RESPIRATORY SYNCYTIAL VIRUS POLYPEPTIDE ANTIGENS**
(71) ID Biomedical Corporation of Quebec, 525 Cartier Boulevard West, Laval, QC H7V 3S8, CA
(72) BLAIS, Normand, 525 Cartier Quest, Laval, Québec H7V 3S8, CA;
RHEAULT, Patrick, 525 Cartier Quest, Laval, Québec H7V 3S8, CA
(74) Dalton, Marcus Jonathan William, et al, GlaxoSmithKline, Corporate Intellectual Property (CN9.25.1), 980 Great West Road, Brentford, Middlesex TW8 9GS, GB

**(51) (8)** **EP 2331587** *
***C 08F 8/12***
***C 08F 218/08***
***A 61K 9/00***
(30) US 15.09.2008. 96976 P
(86) PCT/IB2009054012 14.09.2009.
(96) EP 09787192.5 14.09.2009. En
(87) WO2010029517 18.03.2010. 201011
(97) EP 2331587 15.06.2011. 201124 En
**(54) VINYL ALCOHOL CO-POLYMER CRYOGELS, VINYL ALCOHOL CO-POLYMERS, AND METHODS AND PRODUCTS THEREOF**
(71) Strömme, Maria, Gärdesvägen 25B, 75-651 Uppsala, SE; Mihranyan, Albert, Geijersgatan 40B, 75226 Uppsala, SE
(72) Strömme, Maria, Gärdesvägen 25B, 75-651 Uppsala, SE; Mihranyan, Albert, Geijersgatan 40B, 75226 Uppsala, SE
(74) McNeeney, Stephen Phillip, Potter Clarkson LLP, Park View House, 58 The Ropewalk, Nottingham, NG1 5DD, GB

**(51) (8)** **EP 2338919**
***C 08F 8/42***
***C 08F 4/48***
***C 08F 36/04***
***C 08K 3/04***
***C 08K 3/36***
***C 08L 15/00***
(30) JP 14.10.2008. 2008265434
JP 11.08.2009. 2009186603
(86) PCT/JP2009005331 13.10.2009.
(96) EP 09820430.8 13.10.2009. Ja
(87) WO2010044252 22.04.2010. 201016
(97) EP 2338919 29.06.2011. 201126 En
**(54) MODIFIED CONJUGATED DIENE POLYMER, METHOD FOR PRODUCING THE SAME, MODIFIED CONJUGATED DIENE POLYMER COMPOSITION, AND TIRE**
(71) Asahi Kasei Chemicals Corporation, 1-105, Kanda Jinbocho, Chiyoda-ku, Tokyo 101-8101, JP
(72) YOSHIDA, Junichi, 1-105, Kanda Jinbocho, Chiyoda-ku, Tokyo 101-8101, JP;
SEKIKAWA, Shinichi, 1-105, Kanda Jinbocho, Chiyoda-ku, Tokyo 101-8101, JP;
FUKUOKA, Ryoko, 1-105, Kanda Jinbocho, Chiyoda-ku, Tokyo 101-8101, JP
(74) Bradley, Josephine Mary, D Young & Co LLP, 120 Holborn, London EC1N 2DY, GB

**(51) (8)** **EP 2331629** *
***C 08L 3/02***
***A 61K 47/36***
***A 61K 9/14***
***C 08J 3/12***
***C 08J 3/20***
***C 12N 11/10***
***C 12N 1/20***
(30) US 15.09.2008. 97160 P
(86) PCT/CA2009001260 15.09.2009.
(96) EP 09812572.7 15.09.2009. En
(87) WO2010028489 18.03.2010. 201011
(97) EP 2331629 15.06.2011. 201124 En
**(54) STARCH-BASED MICROPARTICLES FOR THE RELEASE OF AGENTS DISPOSED THEREIN**
(71) Labopharm Inc., 480, Boul. Armand-Frappier, Laval, Quebec H7V 4B4, CA;
Labopharm Europe Limited, 5, The Seapoint Building, 44 Clontarf Road, Dublin 3, IE;
Labopharm (Barbados) Limited, Seaston House, Hastings, Christ Church, BB
(72) RAHMOUNI, Miloud, 17739 Meloche Street, Montréal Québec H9J 3P9, CA;
KHALID, Mohamed, Nabil, 848 Saint-André, Montréal, Québec H2L 5B9, CA;
SANT, Vinayak, 7825 Ave. Querbes, Apt 01, Montréal, Québec H3N 2B9, CA;
TAFER, Abdelaziz, 971 Ave Du Terroir, Lachenale, Québec J6W 6K5, CA;
SMITH, Damon, 2857 des Harfangs, Saint-Laurent Québec H4R 3A5, CA
(74) Jansen, Cornelis Marinus, et al, VEREENIGDE, Johan de Wittlaan 7, 2517 JR Den Haag, NL

**(51) (8)** **EP 2334732** *
***C 08L 23/00***
***C 08L 23/04***
(30) US 01.10.2008. 286834
US 01.10.2008. 286774
US 01.10.2008. 286773
(86) PCT/US2009058798 29.09.2009.
(96) EP 09818376.7 29.09.2009. En
(87) WO2010039715 08.04.2010. 201014
(97) EP 2334732 22.06.2011. 201125 En
**(54) RANDOM COPOLYMER WITH ENHANCED ETHYLENE CONTENT**
(71) Sunoco Chemicals, Inc., 1735 Market Street, Philadelphia, PA 19103, US
(72) RHEE, Aaron, Seung-joon, 30 Davenport Way, Hillsborough, NJ 08844, US;
MCLOUGHLIN, Kimberly, Miller, 1529 Mountain View Drive, Gibsonia, PA 15044, US;

MAJEWSKI, Rita, 233 Broadway Drive, Pittsburgh, PA 15236, US;
MIGONE, Ruben, A., 228 Kittanning Pike, Pittsburgh, PA 15215, US;
KIM, Sehyun, 20565 Westpark Place, Deer Park, IL 60010, US
(74) Olgemöller, Luitgard Maria, Patentanwältin, Lindenstraße 12a, 81545 München, DE

**(51) (8)** **EP 2341106**
***C 08L 101/10***
***C 08K 5/09***
***C 08K 5/17***
***C 08K 5/521***
***C 09J 201/10***
***C 09K 3/10***
(30) JP 29.09.2008. 2008250556
JP 12.03.2009. 2009059761
(86) PCT/JP2009066734 28.09.2009.
(96) EP 09816235.7 28.09.2009. Ja
(87) WO2010035821 01.04.2010. 201013
(97) EP 2341106 06.07.2011. 201127 En
**(54) CURABLE COMPOSITION AND CURED PRODUCT THEREOF**
(71) Kaneka Corporation, 2-4, Nakanoshima 3-chome, Kita-ku, Osaka-shi, Osaka 530-8288, JP
(72) YANO, Ayako, c/o KANEKA CORPORATION, 1-8, Takasagocho Miyamaecho, Takasago-shi, Hyogo 651-2137, JP
(74) Vossius & Partner, Siebertstrasse 4, 81675 München, DE

**(51) (8)** **EP 2251387**
***C 09B 35/031***
***C 09D 11/00***
***D 06P 3/14***
***D 06P 3/24***
***C 09B 29/36***
(96) EP 09160247.4 14.05.2009. En
(97) EP 2251387 17.11.2010. 201046 En
**(54) Acidic azo dyes**
(71) Clariant International Ltd., Rothausstrasse 61, 4132 Muttenz 1, CH
(72) Nusser, Rainer DR., Hoernle 1, 79395 Neuenburg, DE;
Geiger, Ulrich DR., Tullastrasse 5, 79395 Neuenburg/Rhein, DE;
Hasemann, Ludwig DR., Muehlenbachweg 4, 79379 Muellheim-Niederweiler, DE
(74) Jacobi, Carola, et al, Clariant Produkte (Deutschland) GmbH, Group Intellectual Property, Am Unisys-Park 1, 65843 Sulzbach, DE

**(51) (8)** **EP 2342292 ***
***C 09D 5/33***
***C 09D 7/12***
***B 05D 5/06***
***E 01F 9/04***
(30) US 31.10.2008. 262641
(86) PCT/US2009062729 30.10.2009.
(96) EP 09824160.7 30.10.2009. En
(87) WO2010051432 06.05.2010. 201018
(97) EP 2342292 13.07.2011. 201128 En
**(54) RETROREFLECTIVE COATING AND METHOD FOR APPLYING A RETROREFLECTIVE COATING ON A STRUCTURE**
(71) Potters Industries, Inc., 300 Lindenwood Drive, Valleybrooke Corporate Center, Malvern, Pennsylvania 19355-1740, US
(72) BELL, Thomas Reuben, 106 Crimmons Circle, Cary, North Carolina 27511, US;
HALL, Kevin, 7134 Balfour, Allen Park, Michigan 48101, US;
STILL, Thomas, 1467 County Road 3128, Campbell, Texas 75422, US
(74) Instone, Terry, et al, Marks & Clerk LLP, Sussex House, 83-85 Mosley Street, Manchester, M2 3LG, GB

**(51) (8)** **EP 2334744 ***
***C 09J 7/00***
***C 09J 151/06***
***C 09J 123/26***
***B 32B 21/08***
(30) FI 23.09.2008. 20085897
FI 23.09.2008. 20085898
(86) PCT/FI2009050662 17.08.2009.
(96) EP 09815719.1 17.08.2009. En
(87) WO2010034876 01.04.2010. 201013
(97) EP 2334744 22.06.2011. 201125 En
**(54) GLUE LINE MATERIAL FOR WOOD BOARD AND WOOD BOARD**
(71) UPM-Kymmene Wood Oy, Niemenkatu 16, 15140 Lahti, FI
(72) KILJUNEN, Samantha, Lietokatu 12, FI-53500 Lappeenranta, FI;
RAUTIAINEN, Raija, c/o UPM-KYMMENE WOOD OY, Niemenkatu 16, FI-15140 Lahti, FI;
BULBUL, Mizanur, c/o UPM-Kymmene Wood Oy, Niemenkatu 16, FI-15140 Lahti, FI;
HINTIKKA, Milla, c/o UPM-Kymmene Wood Oy, Niemenkatu 16, FI-15140 Lahti, FI;
KOPONEN, Simo, c/o UPM-Kymmene Wood Oy, Niemenkatu 16, FI-15140 Lahti, FI
(74) Papula Oy, Mechelininkatu 1 a, 00180 Helsinki, FI

**(51) (8)** **EP 2324099 ***
***C 10G 1/02***
***C 10G 3/00***
***C 10G 9/00***
(30) EP 17.09.2008. 08450140
(86) PCT/EP2009062037 17.09.2009.
(96) EP 09814118.7 17.09.2009. De
(87) WO2010031803 25.03.2010. 201012
(97) EP 2324099 25.05.2011. 201121 De
**(54) METHOD FOR EXTRACTING FUELS AND PROPELLANTS**
(71) BDI-BIOENERGY INTERNATIONAL AG, Parkring 18, 8074 Grambach/Graz, AT
(72) GOESSLER, Helmut, Hohenrainstrasse 4, A-8042 Graz, AT;
HAMMER, Wilhelm, BDI-BioDiesel International AG, Parkring 18, A-8074 Grambach/Graz, AT
(74) Schwarz, Albin, Schwarz & Partner, Patentanwälte, Wipplingerstraße 30, 1010 Wien, AT

**(51) (8)** **EP 2336269**
***C 10G 2/00***
(30) JP 30.09.2008. 2008254816
(86) PCT/JP2009004896 25.09.2009.
(96) EP 09817443.6 25.09.2009. Ja

(87) WO2010038400 08.04.2010. 201014
(97) EP 2336269 22.06.2011. 201125 En
**(54) SYSTEM FOR SEPARATING CATALYST**
(71) Japan Oil, Gas and Metals National Corporation, 1310, Omiya-cho, Saiwai-ku, Kawasaki-shi, Kanagawa 212-8554, JP;
INPEX Corporation, 5-3-1 Akasaka, Minato-ku, Tokyo 107-6332, JP;
JX Nippon Oil & Energy Corporation, 6-3, Otemachi 2-chome, Chiyoda-ku, Tokyo 100-8162, JP;
Japan Petroleum Exploration Co., Ltd., 7-12, Marunouchi 1-chome, Chiyoda-ku, Tokyo 100-0005, JP;
Cosmo Oil Co., Ltd., 1-1, Shibaura 1-chome, Minato-ku, Tokyo 105-8528, JP;
Nippon Steel Engineering Co., Ltd, 5-1, Osaki 1-chome, Shinagawa-ku, Tokyo 141-8604, JP
(72) ONISHI, Yasuhiro, c/o NIPPON STEEL ENGINEERING CO. LTD., 5-1, Osaki 1-chome, Shinagawa-ku, Tokyo 141-8604, JP;
KATO, Yuzuru, c/o NIPPON STEEL ENGINEERING CO. LTD., 5-1, Osaki 1-chome, Shinagawa-ku, Tokyo 141-8604, JP;
YAMADA, Eiichi, c/o NIPPON STEEL ENGINEERING CO. LTD., 5-1, Osaki 1-chome, Shinagawa-ku, Tokyo 141-8604, JP;
MORITA, Kentarou, c/o NIPPON STEEL ENGINEERING CO. LTD., 5-1, Osaki 1-chome, Shinagawa-ku, Tokyo 141-8604, JP
(74) Vossius & Partner, Siebertstrasse 4, 81675 München, DE

**(51) (8)** **EP 2336270**
***C 10G 2/00***
(30) JP 30.09.2008. 2008253213
(86) PCT/JP2009004883 25.09.2009.
(96) EP 09817438.6 25.09.2009. Ja
(87) WO2010038395 08.04.2010. 201014
(97) EP 2336270 22.06.2011. 201125 En
**(54) METHOD FOR SYNTHESIZING LIQUID FUEL AND APPARATUS FOR SYNTHESIZING LIQUID FUEL**
(71) Japan Oil, Gas and Metals National Corporation, 1310, Omiya-cho, Saiwai-ku, Kawasaki-shi, Kanagawa-ken 212-8554, JP;
INPEX Corporation, 5-3-1 Akasaka, Minato-ku, Tokyo 107-6332, JP;
JX Nippon Oil & Energy Corporation, 6-3, Otemachi 2-chome, Chiyoda-ku, Tokyo 100-8162, JP;
Japan Petroleum Exploration Co., Ltd., 7-12, Marunouchi 1-chome, Chiyoda-ku, Tokyo 100-0005, JP;
Cosmo Oil Co., Ltd., 1-1, Shibaura 1-chome, Minato-ku, Tokyo 105-8528, JP;
Nippon Steel Engineering Co., Ltd, 5-1, Osaki 1-chome, Shinagawa-ku, Tokyo 141-8604, JP
(72) ONISHI, Yasuhiro, c/o NIPPON STEEL ENGINEERING CO. LTD., 5-1, Osaki 1-chome, Shinagawa-ku, Tokyo 141-8604, JP;
HIRAMA, Akihiko, 1-27-5, Minamimaioka, Totsuka-ku, Yokohama-shi, Kanagawa 244-0814, JP
(74) Vossius & Partner, Siebertstrasse 4, 81675 München, DE

**(51) (8)** **EP 2336271**
***C 10G 2/00***
(30) JP 30.09.2008. 2008254815
(86) PCT/JP2009004890 25.09.2009.
(96) EP 09817439.4 25.09.2009. Ja
(87) WO2010038396 08.04.2010. 201014
(97) EP 2336271 22.06.2011. 201125 En
**(54) UNIT FOR HYDROCARBON COMPOUND SYNTHESIS REACTION AND METHOD OF OPERATING SAME**
(71) Japan Oil, Gas and Metals National Corporation, 1310, Omiya-cho, Saiwai-ku, Kawasaki-shi, Kanagawa 212-8554, JP;
INPEX Corporation, 5-3-1 Akasaka, Minato-ku, Tokyo 107-6332, JP;
JX Nippon Oil & Energy Corporation, 6-3, Otemachi 2-chome, Chiyoda-ku, Tokyo 100-8162, JP;
Japan Petroleum Exploration Co., Ltd., 7-12, Marunouchi 1-chome, Chiyoda-ku, Tokyo 100-0005, JP;
Cosmo Oil Co., Ltd., 1-1, Shibaura 1-chome, Minato-ku, Tokyo 105-8528, JP;
Nippon Steel Engineering Co., Ltd, 5-1, Osaki 1-chome, Shinagawa-ku, Tokyo 141-8604, JP
(72) ONISHI, Yasuhiro, c/o NIPPON STEEL ENGINEERING CO. LTD., 5-1, Osaki 1-chome, Shinagawa-ku, Tokyo 141-8604, JP;
KATO, Yuzuru, c/o NIPPON STEEL ENGINEERING CO. LTD., 5-1, Osaki 1-chome, Shinagawa-ku, Tokyo 141-8604, JP;
YAMADA, Eiichi, c/o NIPPON STEEL ENGINEERING CO. LTD., 5-1, Osaki 1-chome, Shinagawa-ku, Tokyo 141-8604, JP;
MURATA, Atsushi, c/o NIPPON STEEL ENGINEERING CO. LTD., 5-1, Osaki 1-chome, Shinagawa-ku, Tokyo 141-8604, JP;
WAKAMURA, Osamu, c/o NIPPON STEEL ENGINEERING CO. LTD., 5-1, Osaki 1-chome, Shinagawa-ku, Tokyo 141-8604, JP;
MORITA, Kentarou, c/o NIPPON STEEL ENGINEERING CO. LTD., 5-1, Osaki 1-chome, Shinagawa-ku, Tokyo 141-8604, JP
(74) Vossius & Partner, Siebertstrasse 4, 81675 München, DE

**(51) (8)** **EP 2334762 ***
***C 10J 3/22***
***F 23G 5/24***
(30) DK 30.08.2008. 200801206
(86) PCT/DK2009050222 28.08.2009.
(96) EP 09776275.1 28.08.2009. En
(87) WO2010022741 04.03.2010. 201009
(97) EP 2334762 22.06.2011. 201125 En
**(54) METHOD AND SYSTEM FOR PRODUCTION OF A CLEAN HOT GAS BASED ON SOLID FUELS**
(71) Dall Energy Holding ApS, Sjaelsøvej 53, 3460 Birkerød, DK
(72) BENTZEN, Jens Dall, Sjælsøvej 53, DK-3460 Birkerød, DK
(74) Plougmann & Vingtoft A/S, Sundkrogsgade 9, P.O. Box 831, 2100 CopenhagenØ, DK

**(51) (8)** **EP 2084249 ***
***C 10L 1/10***
***C 10L 1/16***
(30) US 10.10.2006. 850881 P
US 21.11.2006. 860854 P
(86) PCT/US2007021890 10.10.2007.
(96) EP 07839526.6 10.10.2007. En

(87) WO2008045555 17.04.2008. 200816
(97) EP 2084249 05.08.2009. 200932 En
**(54) FUEL COMPOSITIONS COMPRISING FARNESANE AND FARNESANE DERIVATIVES AND METHOD OF MAKING AND USING SAME**
(71) Amyris, Inc., 5885 Hollis Street Suite 100, Emeryville CA 94608, US
(72) RENNINGER, Neil, Stephen, 4058 Lyman Road, Oakland, CA 94602, US;
MCPHEE, Derek, J., 658 Peridot Pl., Fairfield, CA 94534, US
(74) Weber, Martin, Jones Day, Rechtsanwälte Attorneys-at-Law Patentanwälte, Prinzregentenstrasse 11, 80538 München, DE

---

**(51) (8)** **EP 2099883 ***
***C 10L 1/18***
(30) US 21.11.2006. 860853 P
US 23.07.2007. 951235 P
(86) PCT/US2007024266 20.11.2007.
(96) EP 07874138.6 20.11.2007. En
(87) WO2008140492 20.11.2008. 200847
(97) EP 2099883 16.09.2009. 200938 En
**(54) JET FUEL COMPOSITIONS AND METHODS OF MAKING AND USING SAME**
(71) Amyris, Inc., 5885 Hollis Street Suite 100, Emeryville CA 94608, US
(72) RENNINGER, Neil Stephen, 4058 Lyman Road, Oakland, CA 94602, US;
RYDER, Jason A., 5312 Locksley Avenue, Oakland, CA 94618, US;
FISHER, Karl J., 1116 S. McDowell Boulevard, Petaluma, CA 94954, US
(74) Weber, Martin, et al, Jones Day, Rechtsanwälte Attorneys-at-Law Patentanwälte, Prinzregentenstrasse 11, 80538 München, DE

---

**(51) (8)** **EP 2099884 ***
***C 10L 1/18***
(30) US 21.11.2006. 860853 P
US 23.07.2007. 951236 P
(86) PCT/US2007024270 20.11.2007.
(96) EP 07874140.2 20.11.2007. En
(87) WO2008133658 06.11.2008. 200845
(97) EP 2099884 16.09.2009. 200938 En
**(54) JET FUEL COMPOSITIONS AND METHODS OF MAKING AND USING SAME**
(71) Amyris, Inc., 5885 Hollis Street Suite 100, Emeryville CA 94608, US
(72) RENNINGER, Neil, Stephen, 4058 Lyman Road, Oakland, CA 94602, US;
RYDER, Jason, A., 5312 Locksley Avenue, Oakland, CA 94618, US;
FISHER, Karl, J., 1116 S. McDowell Boulevard, Petaluma, CA 94954, US
(74) Weber, Martin, et al, Jones Day, Rechtsanwälte Attorneys-at-Law Patentanwälte, Prinzregentenstrasse 11, 80538 München, DE

---

**(51) (8)** **EP 2275521**
***C 10L 5/08***
(30) DE 15.12.2005. 102005060426
(96) EP 10013346.1 28.11.2006. De
(97) EP 2275521 19.01.2011. 201103 De
**(54) Moulded body comprising brown coal**
(71) RWE Power Aktiengesellschaft, Huyssenallee 2, 45128 Essen, DE
(72) Lange, Raimund, Auf dem Acker 23, 50259 Pulheim, DE; Menge, Franz-Josef, Am Angelsdorn 6a, 50259 Pulheim, DE; Ritter, Hans-Günter, Goethestr. 29, 50321 Brühl, DE
(74) Polypatent, An den Gärten 7, 51491 Overath, DE

---

**(51) (8)** **EP 2337840 ***
***C 11D 17/06***
***C 11D 3/37***
(30) US 28.08.2008. 92500 P
(86) PCT/US2009054649 21.08.2009.
(96) EP 09810482.1 21.08.2009. En
(87) WO2010025092 04.03.2010. 201009
(97) EP 2337840 29.06.2011. 201126 En
**(54) LAUNDRY STAIN AND SOIL PRETREATMENT SHEET**
(71) Dirty Laundry, Llc, P.O. Box 22033, Cleveland, OH 44122, US
(72) PELTZ, Jamie, B., 4009 Orangewood Drive, Orange Village, OH 44122, US;
GOLOWNIA, Robert, F., 7750 Hudson Park Drive, Hudson, OH 44236, US
(74) Bottero, Carlo, et al, Bugnion S.p.A., Viale Lancetti 17, 20158 Milano, IT

---

**(51) (8)** **EP 2325293**
***C 12M 1/00***
(30) EP 20.11.2009. 09014525
EP 01.12.2009. 09014875
(96) EP 10000900.0 29.01.2010. De
(97) EP 2325293 25.05.2011. 201121 De
**(54) Assembly and method for three-dimensional distribution of electromagnetic radiation in a fluid medium**
(71) Universität Duisburg-Essen, Universitätsstrasse 2, 45141 Essen, DE;
SEE-O-TWO Patentgesellschaft mbH, Hietzinger Kai 13/8, 1130 Wien, AT
(72) Franke, Hilmar, Rossinistrasse 11, 49565 Bramsche, DE; Niederl-Schmidinger, Anneliese, Endresstrasse 102/5/4, 1230 Wien, AT;
Stagl, Karl, Karl-Millöckergasse 1-9, 2353 Guntramsdorf, AT
(74) Gesthuysen, von Rohr & Eggert, Patentanwälte, Huyssenallee 100, 45128 Essen, DE

---

**(51) (8)** **EP 2326707 ***
***C 12N 1/00***
***C 12N 1/19***
(30) US 12.08.2008. 88288 P
(86) PCT/US2009053589 12.08.2009.
(96) EP 09807243.2 12.08.2009. En
(87) WO2010019696 18.02.2010. 201007
(97) EP 2326707 01.06.2011. 201122 En
**(54) METHOD FOR PRODUCTION OF ISOPRENOIDS**
(71) Allylix, Inc., 6020 Cornerstone Court, Suite 260, San Diego, CA 92121, US
(72) JULIEN, Bryan, 3016 Blackmoor Park Circle, Lexington, KY 40509, US;
BURLINGAME, Richard, 3901 Rapid Run Drive 828, Lexington, KY 40515, US
(74) Baldock, Sharon Claire, Boult Wade Tennant, Verulam Gardens, 70 Gray's Inn Road, London WC1X 8BT, GB

**(51) (8)** **EP 2337843** *
***C 12N 1/12***
***C 12M 1/24***
(30) US 11.09.2009. 241520 P
US 06.05.2009. 175950 P
US 24.10.2008. 108183 P
(86) PCT/US2009061878 23.10.2009.
(96) EP 09822783.8 23.10.2009. En
(87) WO2010048525 29.04.2010. 201017
(97) EP 2337843 29.06.2011. 201126 En
**(54) SYSTEMS, APPARATUSES AND METHODS FOR CULTIVATING MICROORGANISMS AND MITIGATION OF GASES**
(71) BioprocessH20 LLC, 45 Highpoint Avenue, Portsmouth Technology Park, Portsmouth, RI 02871, US
(72) HALEY, John, W., III, 276 Angell Street, Providence, RI 02906, US
(74) Every, David Aidan, et al, Marks & Clerk LLP, Sussex House, 83-85 Mosley Street, Manchester, M2 3LG, GB

**(51) (8)** **EP 2329008** *
***C 12N 1/18***
***C 12R 1/865***
(30) FR 16.09.2008. 0805056
(86) PCT/FR2009001080 10.09.2009.
(96) EP 09740346.3 10.09.2009. Fr
(87) WO2010031916 25.03.2010. 201012
(97) EP 2329008 08.06.2011. 201123 Fr
**(54) NOVEL YEAST STRAINS FOR PRODUCING ALCOHOL**
(71) Lesaffre et Compagnie, 41, rue Etienne Marcel, 75001 Paris, FR
(72) COLAVIZZA, Didier, 2 allée des Ormes, Parc de Beaumont, F-59100 Roubaix, FR;
TOUSSAINT, Renaud, 11 rue Cornelle, F-59147 Gondecourt, FR
(74) Cabinet Plasseraud, 52, rue de la Victoire, 75440 Paris Cedex 09, FR

**(51) (8)** **EP 2333046**
***C 12N 1/20***
***C 05F 17/00***
***C 05G 5/00***
(30) JP 09.10.2008. 2008262390
(86) PCT/JP2009062870 16.07.2009.
(96) EP 09819040.8 16.07.2009. Ja
(87) WO2010041503 15.04.2010. 201015
(97) EP 2333046 15.06.2011. 201124 En
**(54) METHOD FOR PRODUCTION OF SEED MATERIAL FOR MICROORGANISMS OPTIMIZED AS CATALYST FOR PARALLEL COMPLEX MINERALIZATION REACTION**
(71) Incorporated Administrative Agency National, Agriculture and Food Research Organization, 1-1, Kannondai 3-chome, Tsukuba-shi, Ibaraki 305-8517, JP
(72) SHINOHARA Makoto, c/o National Institute of Vegetable and Tea Science, Incorporated Administrative Agency, National Agriculture and Food Research Organization, 360 Kusawa, Ano-cho, Tsu-shi, Mie 514-2392, JP
(74) Gille Hrabal Struck Neidlein Prop Roos, Patentanwälte, Brucknerstrasse 20, 40593 Düsseldorf, DE

**(51) (8)** **EP 2337846** *
***C 12N 1/36***
***C 12P 21/00***
(30) US 26.09.2008. 100688 P
(86) PCT/US2009058668 28.09.2009.
(96) EP 09817017.8 28.09.2009. En
(87) WO2010037062 01.04.2010. 201013
(97) EP 2337846 29.06.2011. 201126 En
**(54) NON-NATURAL AMINO ACID REPLICATION-DEPENDENT MICROORGANISMS AND VACCINES**
(71) Ambrx, Inc., 10975 North Torrey Pines Road, Suite 100, La Jolla, CA 92037, US
(72) TIAN, Feng, 9003 Buckwheat Street, San Diego, CA 92129, US;
HEHLI, Brad, 5012 ½ Field Street, San Diego, CA 92110, US
(74) Hallybone, Huw George, Carpmaels & Ransford, One Southampton Row, London, WC1B 5HA, GB

**(51) (8)** **EP 2331678** *
***C 12N 5/06***
***C 12N 5/10***
(30) US 13.06.2008. 61233 P
(86) PCT/US2009047178 12.06.2009.
(96) EP 09763701.1 12.06.2009. En
(87) WO2009152413 17.12.2009. 200951
(97) EP 2331678 15.06.2011. 201124 En
**(54) METHODS FOR OBTAINING HIGH VIABLE CELL DENSITY IN MAMMALIAN CELL CULTURE**
(71) Centocor Ortho Biotech Inc., 800/850 Ridgeview Drive, Horsham, PA 19044, US
(72) DORAI, Haimanti, 145 King Of Prussia Road, Radnor, PA 19087, US;
KYUNG, Yun, Seung, 145 King Of Prussia Road, Radnor, PA 19087, US
(74) Carpmaels & Ransford, One Southampton Row, London, WC1B 5HA, GB

**(51) (8)** **EP 2251418**
***C 12N 5/0784***
***A 61K 39/00***
(30) US 07.10.2004. 522512 P
(96) EP 10174970.3 07.10.2005. En
(97) EP 2251418 17.11.2010. 201046 En
**(54) Mature dendritic cell compositions and methods for culturing same**
(71) Argos Therapeutics, Inc., 4233 Technology Drive, Durham, NC 27704, US
(72) Healey, Don, 402 Lookout Point, Rougemont, NC 27572, US;
Tcherepanova, Irina, 168 Kingston Drive, Chapel Hill, NC 27514, US;
Adams, Melissa, 1909 White Plains Road, Chapel Hill, NC 27517, US;
Hinohara, Atsushi, 115 Glade Crest Way Apt. 201, Durham, NC 27704, US
(74) Harrison Goddard Foote, 106 Micklegate, York, North Yorkshire YO1 6JX, GB

**(51) (8)** **EP 2343370**
***C 12N 9/64***
***A 61K 38/43***
***A 61K 9/19***
***A 61K 9/12***
***A 61K 9/70***
***A 61P 7/04***
(30) CN 27.09.2008. 200810223433
(86) PCT/CN2009000230 04.03.2009.
(96) EP 09815546.8 04.03.2009. Zh
(87) WO2010034176 01.04.2010. 201013
(97) EP 2343370 13.07.2011. 201128 En
**(54) A THROBIN-LIKE ENZYME OF AGKISTRODON ACUTUS**
(71) Konruns Pharmaceutical Co., Ltd., 712, Building A, Jiahua Building, No. 9, Street 3, Shang Di, Haidian District, Beijing 100085, CN
(72) SUN, Di, 712 Building, Jiahua Building, No. 9, Street 3, Shang Di, Haidian District, Beijing 100085, CN;
WANG, Xijuan, 712 Building, Jiahua Building, No. 9, Street 3, Shang Di, Haidian District, Beijing 100085, CN
(74) Sundien, Thomas, Nordic Patent Service A/S, Pilestræde 58, DK-1112 Copenhagen K, DK

**(51) (8)** **EP 2342331 ***
***C 12N 9/88***
***C 12N 15/60***
***C 12N 15/82***
***A 01H 5/00***
***A 01H 5/10***
(30) US 26.09.2008. 100541 P
(86) PCT/US2009058169 24.09.2009.
(96) EP 09792933.5 24.09.2009. En
(87) WO2010036771 01.04.2010. 201013
(97) EP 2342331 13.07.2011. 201128 En
**(54) HERBICIDE-RESISTANT AHAS-MUTANTS AND METHODS OF USE**
(71) BASF Agrochemical Products, B.V., Groningensingel 1, 6035 EA Arnhem, NL
(72) BEETHAM, Peter, 7128 Tanager Drive, Carlsbad, CA 92011, US;
CARLSON, Dale, 600 Sawcut Lane, Apex, NC 27502, US;
GOCAL, Greg, 13737 Bassmore Drive, San Diego, CA 92129, US;
MC ELVER, John, 5112 Gatewood Drive, Durham, NC 27712, US;
PEARCE, James, 4977 Lamant Street, San Diego, CA 92109, US;
SCHOPKE, Christian, 11266 Caminito Aclara, San Diego, CA 92126, US;
SINGH, Bijay, 301 Connemara Drive, Cary, NC 27519, US;
WALKER, Keith, 13315 Roxton Circle, San Diego, CA 92130, US
(74) Williams, Richard Andrew Norman, Harrison Goddard Foote, 40- 43 Chancery Lane, London WC2A 1JA, GB

**(51) (8)** **EP 2333056**
***C 12N 9/96***
***A 23C 19/032***
***C 12N 9/52***
***C 12N 9/58***
***C 12N 9/64***
(30) EP 13.04.2006. 06112649
US 13.04.2006. 791447 P
(96) EP 11156545.3 12.04.2007. En
(97) EP 2333056 15.06.2011. 201124 En
**(54) Liquid composition comprising an aspartic protease**
(71) DSM IP Assets B.V., Het Overloon 1, 6411 TE Heerlen, NL
(72) Haan, De, André, Pauwmolen 75, 2645 GC, DELFGAUW, NL;
Caussette, Mylene, 10 Rue de Cambrai, 59000, LILLE, FR;
Schooneveld-Bergmans, Margot, Elisabeth, Francoise, Wilhelminalaan 196, 2625 KK, DELFT, NL
(74) van Grieken-Plooster, Izabella Johanna, et al, DSM Intellectual Property, P.O. Box 130, 6100 AC Echt, NL

**(51) (8)** **EP 2333057**
***C 12N 11/00***
***A 01G 1/00***
***A 01G 31/00***
***B 09B 3/00***
***C 05F 1/00***
***C 05F 3/00***
***C 05F 5/00***
***C 05F 7/00***
***C 05F 9/00***
***C 05F 17/00***
(30) JP 09.10.2008. 2008262385
(86) PCT/JP2009062868 16.07.2009.
(96) EP 09819039.0 16.07.2009. Ja
(87) WO2010041502 15.04.2010. 201015
(97) EP 2333057 15.06.2011. 201124 En
**(54) SOLID SUPPORT COMPRISING MICROORGANISMS CAPABLE OF CONDUCTING PARALLEL MULTIPLE MINERALIZATION IMMOBILIZED THEREON, CATALYST COLUMN AND METHOD FOR PRODUCING SOLID MEDIUM FOR CULTIVATING PLANTS**
(71) Incorporated Administrative Agency National, Agriculture and Food Research Organization, 1-1, Kannondai 3-chome, Tsukuba-shi, Ibaraki 305-8517, JP
(72) SHINOHARA, Makoto, c/o National Institute of Vegetable and Tea Science, Incorporated Administrative Agency, National Agriculture and Food Research Organization, 360 Kusawa, Ano-cho, Tsu-shi, Mie 514-2392, JP
(74) Gille Hrabal Struck Neidlein Prop Roos, Patentanwälte, Brucknerstrasse 20, 40593 Düsseldorf, DE

**(51) (8)** **EP 2084279 ***
***C 12N 15/09***
***C 12N 15/32***
(30) US 04.10.2006. 849451 P
US 23.08.2007. 957543 P
(86) PCT/US2007021267 03.10.2007.
(96) EP 07873439.9 03.10.2007. En
(87) WO2008127281 23.10.2008. 200843
(97) EP 2084279 05.08.2009. 200932 En
**(54) DNA-GUIDED NANOPARTICLE ASSEMBLIES**
(71) Brookhaven Science Associates, 40 Brookhaven Avenue, Upton, NY 11973, US
(72) GANG, Oleg, 23 Arbor Ridge Lane, South Setauket, NY 11720, US;
NYKYPANCHUK, Dmytro, 16 Tennyson Avenue, Westbury, NY 11590, US;

MAYE, Mathew, 85 Artist Lake Boulevard, Middle Island, NY 11953, US;
VAN DER LELIE, Daniel, 11 Ashley Lane, Shoreham, NY 11786, US
(74) Gustad, Trond, et al, Oslo Patentkontor AS, P.O. Box 7007 M, 0306 Oslo, NO

**(51) (8)** **EP 2119777**
***C 12N 15/09***
***C 07K 16/18***
***C 12N 5/06***
***C 12Q 1/02***
***C 12Q 1/68***
***G 01N 33/53***
***C 12P 21/08***
(30) JP 09.02.2007. 2007031075
(86) PCT/JP2008052039 07.02.2008.
(96) EP 08710918.7 07.02.2008. Ja
(87) WO2008096817 14.08.2008. 200833
(97) EP 2119777 18.11.2009. 200947 En
**(54) GABA NEURON PROGENITOR CELL MARKER 65B13**
(71) Eisai R&D Management Co., Ltd., 6-10, Koishikawa 4-chome, Bunkyo-ku, Tokyo 112-8088, JP
(72) ONO, Yuichi, c/o KAN RESEARCH INSTITUTE INC., 3F Kobe MIR&D Center, 6-7-3 Minatojima-minamimachi, Chuo-ku, Kobe-shi, Hyogo 650-0047, JP;
NAKAGAWA, Yasuko, c/o KAN RESEARCH INSTITUTE INC., 3F Kobe MIR&D Center, 6-7-3 Minatojima-minamimachi, Chuo-ku, Kobe-shi, Hyogo 650-0047, JP;
MIZUHARA, Eri, c/o KAN RESEARCH INSTITUTE INC., 3F Kobe MIR&D Center, 6-7-3 Minatojima-minamimachi, Chuo-ku, Kobe-shi, Hyogo 650-0047, JP
(74) Grünecker, Kinkeldey, Stockmair & Schwanhäusser, Anwaltssozietät, Leopoldstrasse 4, 80802 München, DE

**(51) (8)** **EP 2330193**
***C 12N 15/09***
***A 61K 39/395***
***A 61P 1/04***
***A 61P 1/16***
***A 61P 3/10***
***A 61P 7/06***
***A 61P 9/00***
***A 61P 9/10***
***A 61P 11/00***
***A 61P 11/06***
***A 61P 13/12***
***A 61P 15/08***
***A 61P 17/00***
***A 61P 17/06***
***A 61P 19/02***
***A 61P 19/10***
***A 61P 21/00***
***A 61P 25/00***
***A 61P 27/02***
***A 61P 29/00***
(30) JP 26.09.2008. 2008248213
JP 13.03.2009. 2009060806
JP 19.03.2009. 2009067925
(86) PCT/JP2009066590 25.09.2009.
(96) EP 09816184.7 25.09.2009. Ja
(87) WO2010035769 01.04.2010. 201013
(97) EP 2330193 08.06.2011. 201123 En
**(54) IMPROVED ANTIBODY MOLECULE**
(71) Chugai Seiyaku Kabushiki Kaisha, 5-1, Ukima 5-chome, Kita-ku, Tokyo 115-8543, JP
(72) IGAWA, Tomoyuki, c/o CHUGAI SEIYAKU KABUSHIKI KAISHA, 135 Komakado 1-chome, Gotenba-shi, Shizuoka 412-8513, JP;
ISHII, Shinya, c/o CHUGAI SEIYAKU KABUSHIKI KAISHA, 135 Komakado 1-chome, Gotenba-shi, Shizuoka 412-8513, JP;
MAEDA, Atsuhiko, c/o CHUGAI SEIYAKU KABUSHIKI KAISHA, 135 Komakado 1-chome, Gotenba-shi, Shizuoka 412-8513, JP;
SAKURAI, Mika, c/o CHUGAI SEIYAKU KABUSHIKI KAISHA, 135 Komakado 1-chome, Gotenba-shi, Shizuoka 412-8513, JP;
KOJIMA, Tetsuo, c/o CHUGAI SEIYAKU KABUSHIKI KAISHA, 135 Komakado 1-chome, Gotenba-shi, Shizuoka 412-8513, JP;
TACHIBANA, Tatsuhiko, c/o CHUGAI SEIYAKU KABUSHIKI KAISHA, 135 Komakado 1-chome, Gotenba-shi, Shizuoka 412-8513, JP;
SHIRAIWA, Hirotake, c/o CHUGAI SEIYAKU KABUSHIKI KAISHA, 135 Komakado 1-chome, Gotenba-shi, Shizuoka 412-8513, JP;
TSUNODA, Hiroyuki, c/o CHUGAI SEIYAKU KABUSHIKI KAISHA, 135 Komakado 1-chome, Gotenba-shi, Shizuoka 412-8513, JP;
HIGUCHI, Yoshinobu, c/o CHUGAI SEIYAKU KABUSHIKI KAISHA, 135 Komakado 1-chome, Gotenba-shi, Shizuoka 412-8513, JP
(74) Vossius & Partner, Siebertstrasse 4, 81675 München, DE

**(51) (8)** **EP 2342334 ***
***C 12N 15/09***
(30) US 29.09.2008. 101083 P
US 27.05.2009. 181659 P
(86) PCT/US2009058852 29.09.2009.
(96) EP 09817051.7 29.09.2009. En
(87) WO2010037124 01.04.2010. 201013
(97) EP 2342334 13.07.2011. 201128 En
**(54) TUMOR VASCULAR MARKER-TARGETED VACCINES**
(71) The Trustees Of The University Of Pennsylvania, 3160 Chestnut Street, Suite 200, Philadelphia, PA 19104-6283, US
(72) COUKOS, George, 465 Clothier Road, Wynnewood, PA 19096, US;
FACCIABENE, Andrea, 1705 Wallace Street, Philadelphia, PA 19130, US
(74) Rigby, Barbara Nicole, Dehns, St Bride's House, 10 Salisbury Square, London EC4Y 8JD, GB

**(51) (8)** **EP 2331690 ***
***C 12N 15/11***
(30) US 09.09.2008. 95487 P
US 03.04.2009. 166488 P
US 27.01.2009. 147668 P
US 27.01.2009. 147680 P
US 02.09.2008. 93620 P
(86) PCT/US2009055745 02.09.2009.
(96) EP 09792177.9 02.09.2009. En
(87) WO2010028054 11.03.2010. 201010
(97) EP 2331690 15.06.2011. 201124 En

**(54) COMPOSITIONS AND METHODS FOR INHIBITING EXPRESSION OF MUTANT EGFR GENE**
(71) Alnylam Pharmaceuticals Inc., 300 Third Street, Cambridge, MA 02142, US;
Alnylam Europe AG., 300 Third Street, Cambridge, MA 02142, US;
The Regents Of The University Of California, 1111 Franklin Street, Oakland, CA 94607-5200, US
(72) SAH, Dinah, Alnylam Pharmaceuticals Inc., 300 Third Street, Cambridge, MA 02142, US;
TAN, Pamela, Alnylam Pharmaceuticals Inc., 300 Third Street, Cambridge, MA 02142, US;
PEREZ, Maria Del Mar Inda, 9500 Gilman Drive, Cellular and Molecular Medicine - East 3041, La Jolla, CA 92093-0660, US;
FURNARI, Frank, 9500 Gilman Drive, Cellular and Molecular Medicine - East 3041, La Jolla, CA 92093-0660, US;
CAVENEE, Webster, 9500 Gilman Drive, Cellular and Molecular Medicine - East 3041, La Jolla, CA 92093-0660, US;
BONAVIA, Rudy, 9500 Gilman Drive, Cellular and Molecular Medicine - East 3041, La Jolla, CA 92093-0660, US
(74) Vossius & Partner, Siebertstrasse 4, 81675 München, DE

**(51) (8)** **EP 2256203**
***C 12N 15/12***
***C 07K 14/715***
***C 12N 15/24***
***C 07K 14/54***
***A 61K 38/20***
***A 61K 39/00***
***A 61K 31/7088***
***C 12Q 1/68***
***G 01N 33/53***
***A 61K 48/00***
***A 61P 37/00***
(30) US 21.11.2003. 720026
(96) EP 10176963.6 18.11.2004. En
(97) EP 2256203 01.12.2010. 201048 En
**(54) IL-23 and its receptor; related reagents and methods**
(71) Schering Corporation, 2000 Galloping Hill Road, Kenilworth, NJ 07033-0530, US
(72) Chirica, Madaline, 11 Eleanor Street, Dedham, MA 02026, US;
Kastelein, Robert A., 463 Summit Drive, Redwood City, CA 94062, US;
Moore, Kevin W., 251 Carolina Lane, Palo Alto, CA 94306, US;
Parham, Christi L., 844 Fremont Street, No. 4, Menlo Park, CA 94025, US
(74) Miller, David James, Mathys & Squire LLP, 120 Holborn, London EC1N 2SQ, GB

**(51) (8)** **EP 2342344 ***
***C 12N 15/63***
***C 12N 15/82***
***A 01H 1/00***
***C 12Q 1/68***
(30) US 06.10.2008. 287230
(86) PCT/US2009002237 08.04.2009.
(96) EP 09819530.8 08.04.2009. En
(87) WO2010042138 15.04.2010. 201015
(97) EP 2342344 13.07.2011. 201128 En

**(54) SYSTEM FOR CAPTURING&MODIFYING LARGE PIECES OF GENOMIC DNA AND CONSTRUCTING ORGANISMS WITH SYNTHETIC CHLOROPLASTS**
(71) Sapphire Energy, Inc., 3115 Merryfield Row, San Diego, CA 92121, US
(72) MENDEZ, Michael, 3554 Seahom Circle, San Diego, CA 92130, US;
O'NEILL, Bryan, 12123 Caminito Mira Del Mar, San Diego, CA 92130, US;
MIKKELSON, Kari, 2844 Keats Street, San Diego, CA 92109, US
(74) Leoni, Richard Pietro, HLBBshaw, Merlin House, Falconry Court, Baker's Lane, Epping, Essex CM16 5DQ, GB

**(51) (8)** **EP 2329028 ***
***C 12N 15/82***
(30) EP 02.09.2008. 08163495
(86) PCT/EP2009006319 01.09.2009.
(96) EP 09778245.2 01.09.2009. En
(87) WO2010025888 11.03.2010. 201010
(97) EP 2329028 08.06.2011. 201123 En
**(54) ENGINEERING OF BOLTING RESISTANCE IN SUGAR BEET BY MEANS OF THE TRANSGENIC EXPRESSION OF THE BEET HOMOLOGUE OF FLOWERING TIME CONTROL GENE FT**
(71) Syngenta Participations AG, Schwarzwaldallee 215, 4058 Basel, CH
(72) VAN ROGGEN, Petronella Maria, Duvstigen 21, S-26141 Landskrona, SE;
GIELEN, Johannes Jacobus Ludgerus, 211C, route de Vacquiers, F-31620 Bouloc, FR;
PIN, Pierre, Krutmeijersgatan 8 b, S-217 41 Malmö, SE;
WREMERTH WEICH, Signe Irene Elisabeth, Erikstorpsvägen 41C, S-26161 Landskrona, SE
(74) Scharrenberg, Christian, Syngenta International AG, Seeds IP Department, WRO1004.8.11, Schwarzwaldallee 215, 4058 Basel, CH

**(51) (8)** **EP 2331694 ***
***C 12N 15/82***
***C 12N 15/55***
***C 12N 9/10***
***A 01H 5/00***
***A 01H 5/10***
(30) US 31.07.2008. 85224 P
(86) PCT/NL2009050468 30.07.2009.
(96) EP 09788255.9 30.07.2009. En
(87) WO2010014007 04.02.2010. 201005
(97) EP 2331694 15.06.2011. 201124 En
**(54) HERBICIDE RESISTANT SUNFLOWER PLANTS**
(71) Anglo Netherlands Grain BV, Willemsplein 492, 3016 DR Rotterdam, NL
(72) SALA, Carlos, Garibaldi 166, Venado Tuerto, province Santa Fe, AR;
BULOS, Mariano, 25 de Mayo 457, Venado Tuerto, Province: Santa Fe, AR
(74) Swinkels, Bart Willem, Nederlandsch Octrooibureau, J. W. Frisolaan 13, 2517 JS Den Haag, NL

**(51) (8)** **EP 2334795 ***
***C 12N 15/82***
(30) US 08.09.2008. 95134 P
(86) PCT/US2009056165 08.09.2009.

(96) EP 09792298.3 08.09.2009. En
(87) WO2010028331 11.03.2010. 201010
(97) EP 2334795 22.06.2011. 201125 En
**(54) COMPOSITIONS AND METHODS FOR EXPRESSION OF A HETEROLOGOUS NUCLEOTIDE SEQUENCE IN PLANTS**
(71) Athenix Corporation, 2500 Paramount Parkway, Morrisville, NC 27560, US
(72) HAMMER, Philip, E., 215 Covington Square Drive, Cary, NC 27513, US;
BEILINSON, Vadim, 4029 Remington Oak Circle, Cary, NC 27519, US;
HINSON, Todd, K., 3510 Moriah Road, Rougemont, NC 27572, US
(74) Power, David, J.A. Kemp & Co., 14 South Square, Gray's Inn, London WC1R 5JJ, GB

**(51) (8)** **EP 2334797 ***
***C 12N 15/82***
***A 01H 5/00***
(30) US 24.09.2008. 99629 P
EP 24.09.2008. 08165001
EP 07.10.2008. 08166008
US 07.10.2008. 103301 P
EP 23.10.2008. 08167390
US 23.10.2008. 107695 P
US 23.10.2008. 107680 P
EP 23.10.2008. 08167387
EP 29.04.2009. 09100261
US 26.05.2009. 180953 P
(86) PCT/EP2009062174 21.09.2009.
(96) EP 09783222.4 21.09.2009. En
(87) WO2010034681 01.04.2010. 201013
(97) EP 2334797 22.06.2011. 201125 En
**(54) PLANTS HAVING ENHANCED YIELD-RELATED TRAITS AND A METHOD FOR MAKING THE SAME**
(71) BASF Plant Science GmbH, 67056 Ludwigshafen, DE
(72) HATZFELD, Yves, rue des Dondaines 18C, F-59000 Lille, FR;
FRANKARD, Valerie, Avenue des Croix du Feu 84, B-1410 Waterloo, BE;
REUZEAU, Christophe, Rue de Cimetire, F-24350 La Chapelle Gonaguet, FR
(74) Popp, Andreas, BASF SE, Global Intellectual Property, GVX - C6, 67056 Ludwigshafen, DE

**(51) (8)** **EP 2342346 ***
***C 12P 3/00***
***C 12P 5/02***
***C 12P 7/06***
***C 12P 7/54***
(30) US 13.08.2009. 233644 P
US 24.09.2008. 99750 P
US 15.12.2008. 122573 P
(86) PCT/IB2009007268 24.09.2009.
(96) EP 09771409.1 24.09.2009. En
(87) WO2010035142 01.04.2010. 201013
(97) EP 2342346 13.07.2011. 201128 En
**(54) ENERGY PRODUCTION WITH HYPERTHERMOPHILIC ORGANISMS**
(71) Hyperthermics Holding AS, Industrivegen 42, 6160 Hovdebygda, NO
(72) REMMEREIT, Jan, Halkjelsgata 7, N-6100 Volda, NO;
THOMM, Michael, Obermunsterstr. 12, 93047 Regensburg, DE
(74) Glawe, Delfs, Moll, Patent- und Rechtsanwälte, Rothenbaumchaussee 58, 20148 Hamburg, DE

**(51) (8)** **EP 2115159 ***
***C 12Q 1/25***
***G 01N 33/50***
(30) US 31.01.2007. 898947 P
(86) PCT/US2008052700 31.01.2008.
(96) EP 08728753.8 31.01.2008. En
(87) WO2008095126 07.08.2008. 200832
(97) EP 2115159 11.11.2009. 200946 En
**(54) ASSAYS FOR MODULATORS OF PARKIN ACTIVITY USING NOVEL SUBSTRATES**
(71) Elan Pharma International Limited, 800 Gateway Boulevard, South San Francisco, CA 94080, US
(72) JOHNSTON, Jennifer, A., 889 Marin Drive, Mill Valley, CA 94941, US;
GOLDBERG, Alfred, 171 Crafts Road, Chestnut Hill, MA 02467, US
(74) Bullett, Rachel Margaret, et al, Carpmaels & Ransford, One Southampton Row, London, WC1B 5HA, GB

**(51) (8)** **EP 2239340**
***C 12Q 1/68***
(30) DE 11.05.2004. 102004023187
(96) EP 10005074.9 11.05.2005. De
(97) EP 2239340 13.10.2010. 201041 De
**(54) Identification of surface-oriented antigens for tumour diagnosis and treatment**
(71) Ganymed Pharmaceuticals AG, Freiligrathstrasse 12, 55131 Mainz, DE
(72) Türeci, Özlem, Philipp-VON-Zabern-Platz 1, 55116 Mainz, DE;
Sahin, Ugur, Philipp-VON-Zabern-Platz 1, 55116 Mainz, DE;
Schneider, Sandra, Lutherstrasse 4, 76297 Stutensee, DE;
Helftenbein, Gerd, Nieder-Ohmener Strasse 16, 35329 Gemünden, DE;
Schlüter, Volker, Zacherlweg 18, 82061 Neuried, DE;
Usener, Dirk, Richard-Wagner-Strasse 87b, 65193 Wiesbaden, DE;
Thiel, Philippe, Käthe-Kollwitz-Strasse 4, 82152 Planegg, DE;
Koslowski, Michael, Autogenstrasse 50, 65933 Frankfurt, DE
(74) Schnappauf, Georg, et al, Dr. Volker Vossius, Patent- und Rechtsanwaltskanzlei, Geibelstrasse 6, 81679 München, DE

**(51) (8)** **EP 2324126 ***
***C 12Q 1/68***
(30) US 12.08.2008. 88203 P
US 12.06.2009. 186673 P
US 10.07.2009. 224647 P
(86) PCT/US2009053373 11.08.2009.
(96) EP 09807152.5 11.08.2009. En
(87) WO2010019550 18.02.2010. 201007
(97) EP 2324126 25.05.2011. 201121 En
**(54) METHOD OF IDENTIFYING DISEASE RISK FACTORS**
(71) Zinfandel Pharmaceuticals, Inc., One Science Drive, Durham, NC 27708, US
(72) ROSES, Allen D., 53525 Bickett, Chapel Hill, North Carolina 27517, US

(74) Weiss, Wolfgang, et al, Weickmann & Weickmann, Patentanwälte, Postfach 86 08 20, 81635 München, DE

**(51) (8)** **EP 2326730** *
***C 12Q 1/68***
***C 12P 19/34***
***C 07H 21/00***
(30) US 19.08.2008. 90155 P
(86) PCT/US2009054336 19.08.2009.
(96) EP 09808780.2 19.08.2009. En
(87) WO2010022166 25.02.2010. 201008
(97) EP 2326730 01.06.2011. 201122 En
**(54) MICRO RNA (MIRNA) AND NEUROFIBROMATOSIS TYPE 1 : A ROLE IN DIAGNOSIS AND THERAPY**
(71) Maine Institute For Human Genetics And Health, 43 Whiting Hill Road, Suite 150, Brewer, ME 04412, US
(72) YU, Xijie, 46 West Street Ext.,Unit 7, Bar Harbor, ME 04609, US;
HOCK, Janet, M., 181 Norfolk Street, Bangor, ME 04401, US
(74) Nash, David Allan, Haseltine Lake LLP, Redcliff Quay, 120 Redcliff Street, Bristol, BS1 6HU, GB

**(51) (8)** **EP 2326738** *
***C 22C 1/05***
***B 02C 2/00***
(30) BE 19.09.2008. 200800519
(86) PCT/EP2009060979 26.08.2009.
(96) EP 09782200.1 26.08.2009. Fr
(87) WO2010031661 25.03.2010. 201012
(97) EP 2326738 01.06.2011. 201122 Fr
**(54) MILLING CONE FOR A COMPRESSION CRUSHER**
(71) Magotteaux International SA, Rue Adolphe Dumont, 4051 Vaux-sous-Chevremont, BE
(72) BERTON, Guy, Thier de l'Eglise 5, B-4210 Oteppe, BE
(74) pronovem, Office Van Malderen, Boulevard de la Sauvenire 85/043, 4000 Lige, BE

**(51) (8)** **EP 2329052** *
***C 22C 1/05***
***E 02F 9/28***
(30) BE 19.09.2008. 200800518
(86) PCT/EP2009060978 26.08.2009.
(96) EP 09782199.5 26.08.2009. Fr
(87) WO2010031660 25.03.2010. 201012
(97) EP 2329052 08.06.2011. 201123 Fr
**(54) COMPOSITE TOOTH FOR WORKING THE GROUND OR ROCK**
(71) Magotteaux International SA, Rue Adolphe Dumont, 4051 Vaux-sous-Chevremont, BE
(72) BERTON, Guy, Thier de l'Eglise 5, B-4210 Oteppe, BE
(74) pronovem, Office Van Malderen, Boulevard de la Sauvenire 85/043, 4000 Lige, BE

**(51) (8)** **EP 2334836** *
***C 22C 1/05***
(30) BE 19.09.2008. 200800521
(86) PCT/EP2009060980 26.08.2009.
(96) EP 09782201.9 26.08.2009. Fr
(87) WO2010031662 25.03.2010. 201012
(97) EP 2334836 22.06.2011. 201125 Fr
**(54) HIERARCHICAL COMPOSITE MATERIAL**
(71) Magotteaux International SA, Rue Adolphe Dumont, 4051 Vaux-sous-Chevremont, BE
(72) VESCERA, Francesco, Rue Vaux-Toultia 8, B-4530 Vaux-Borset, BE
(74) pronovem, Office Van Malderen, Boulevard de la Sauvenire 85/043, 4000 Lige, BE

**(51) (8)** **EP 2251452**
***C 23C 16/505***
***G 01N 15/08***
***A 61B 5/15***
(30) US 13.05.2009. 177984 P
US 24.07.2009. 213904 P
US 17.08.2009. 234505 P
US 14.11.2009. 261321 P
US 20.11.2009. 263289 P
US 11.12.2009. 285813 P
US 25.01.2010. 298159 P
US 29.01.2010. 299888 P
US 26.03.2010. 318197 P
US 02.07.2009. 222727 P
US 11.05.2010. 333625 P
(96) EP 10162756.0 12.05.2010. En
(97) EP 2251452 17.11.2010. 201046 En
**(54) Vessel processing**
(71) CV Holdings, LLC., 1030 Riverfront Center, P.O.Box 710, Amsterdam, New York 12010, US
(72) Abrams, Robert S., 21 Marian Avenue, Albany, NY 12203, US;
Felts, John T., 2624 Calhoun Street, Alameda, CA 94501, US;
Fisk, Thomas E., 955 North Night Heron Drive, Green Valley, AZ 85614, US;
Sagona, Peter J., 161 Ridgeview Drive, Pottstown, PA 19465, US
(74) Maiwald, Walter, Maiwald Patentanwalts GmbH, Elisenhof, Elisenstrasse 3, 80335 München, DE

**(51) (8)** **EP 2251454**
***C 23C 16/505***
***C 23C 16/52***
***C 23C 16/54***
***G 01N 15/08***
***A 61B 5/15***
(30) US 13.05.2009. 177984 P
US 24.07.2009. 213904 P
US 17.08.2009. 234505 P
US 14.11.2009. 261321 P
US 20.11.2009. 263289 P
US 11.12.2009. 285813 P
US 25.01.2010. 298159 P
US 29.01.2010. 299888 P
US 26.03.2010. 318197 P
US 02.07.2009. 222727 P
US 11.05.2010. 333625 P
(96) EP 10162760.2 12.05.2010. En
(97) EP 2251454 17.11.2010. 201046 En
**(54) Vessel coating and inspection**
(71) CV Holdings, LLC., 1030 Riverfront Center, P.O.Box 710, Amsterdam, New York 12010, US
(72) Abrams, Robert S., 21 Marian Avenue, Albany, NY 12203, US;
Felts, John T., 2624 Calhoun Street, Alameda, CA 94501, US;

Fisk, Thomas E., 955 North Night Heron Drive, Green Valley, AZ 85614, US
(74) Maiwald, Walter, Maiwald Patentanwalts GmbH, Elisenhof, Elisenstrasse 3, 80335 München, DE

**(51) (8)** **EP 2253735**
***C 23C 16/505***
***C 23C 16/54***
***G 01N 15/08***
***A 61B 5/15***
***C 23C 16/04***
***C 23C 16/52***
(30) US 13.05.2009. 177984 P
US 24.07.2009. 213904 P
US 17.08.2009. 234505 P
US 14.11.2009. 261321 P
US 20.11.2009. 263289 P
US 11.12.2009. 285813 P
US 25.01.2010. 298159 P
US 29.01.2010. 299888 P
US 26.03.2010. 318197 P
US 02.07.2009. 222727 P
US 11.05.2010. 333625 P
(96) EP 10162755.2 12.05.2010. En
(97) EP 2253735 24.11.2010. 201047 En
**(54) Vessel processing**
(71) CV Holdings, LLC., 1030 Riverfront Center, P.O.Box 710, Amsterdam, New York 12010, US
(72) Abrams, Robert S., 21 Marian Avenue, Albany, NY 12203, US;
Felts, John T., 2624 Calhoun Street, Alameda, CA 94501, US;
Fisk, Thomas E., 955 North Night Heron Drive, Green Valley, AZ 85614, US
(74) Maiwald, Walter, Maiwald Patentanwalts GmbH, Elisenhof, Elisenstrasse 3, 80335 München, DE

**(51) (8)** **EP 2253736**
***C 23C 18/44***
(30) KR 15.05.2009. 20090042676
KR 28.09.2009. 20090091500
(96) EP 10150085.8 05.01.2010. En
(97) EP 2253736 24.11.2010. 201047 En
**(54) Method for electroless deposition of nano metallic silver and reflector of high reflectance deposited by nano metallic silver using the same**
(71) Nano CMS Co., Ltd., 8-5 block, Cheonan 4 Regional Industrial Areas, 281 Mosi-ri, Jiksan-eup, Seobuk-gu, Cheonan-si, Chungcheongnam-do 331-814, KR
(72) Kim, Si Doo, 1010-1304 Samsung Apt., 101 Imae-dong, Bundang-gu, Seongnam-si, Gyeonggi-do 463-829, KR;
Lee, Seong Uk, 106-1002, Cheonggu Apt., 824-60 Oksan-dong, Gyeongsan-si, Gyeongsangbuk-do 712-765, KR;
Hwang, Jea Youn, 303-109, Jugong Apt., Yeonsu-dong, Chungju-si, Chungcheongbuk-do 380-766, KR;
Kim, Shi Surk, 107-501 Thesharplakeside Apt., Doekji-ri, Tancheonmyeon, Gongju-si, Chungcheongnam-do 336-719, KR
(74) Melin Granberg, Linda, Groth & Co KB, P.O. Box 6107, 102 32 Stockholm, SE

**(51) (8)** **EP 2129823 ***
***D 06F 37/26***
(30) IT 21.02.2007. AN20070008
IT 21.02.2007. AN20070009
(86) PCT/IT2008000098 15.02.2008.
(96) EP 08720243.8 15.02.2008. En
(87) WO2008102396 28.08.2008. 200835
(97) EP 2129823 09.12.2009. 200950 En
**(54) WASHING MACHINE TANK PROVIDED WITH EXTERNAL REINFORCING CAP ON BOTTOM WALL**
(71) Meccanica Generale S.R.L., Via San Giuseppe 6, 60038 San Paolo Di Jesi (AN), IT
(72) BACELLI, Gianfranco, 1, Via Bacigalupo, I-60035 Jesi (AN), IT;
MANCINI, Stefano, 75/B, Via Raffaello Sanzio, I-60035 Jesi (AN), IT;
PARDINI, Simone, 36, Via Risorgimento, I-60030 Santa Maria Nuova (AN), IT;
PERTICARA, Giuseppe, 33, Via Sforza, I-62100 Macerata, IT
(74) Baldi, Claudio, Viale Cavallotti, 13, 60035 Jesi (AN), IT

**(51) (8)** **EP 2243877**
***D 06F 75/12***
***D 06F 75/38***
(96) EP 09158511.7 22.04.2009. En
(97) EP 2243877 27.10.2010. 201043 En
**(54) Iron with external water reservoir**
(71) Eksen Makine Sanayi ve Ticaret A.S., Gebze Organize Sanayi Bölgesi No. 602, Gebze, 41480 Kocaeli, TR
(72) Tahincioglu, Besim, EKSEN Makine Sanayi ve Ticaret A.S., Gebze Organize Sanayi Bölgesi No:602 Gebze, 41480 Kocaeli, TR
(74) Sevinç, Erkan, Istanbul Patent & Trademark Consultancy Ltd., Plaza-33, Büyükdere cad. No: 33/16, Sisli, 34381 Istanbul, TR

**(51) (8)** **EP 2331744 ***
***D 06N 7/00***
***A 47G 27/04***
(30) US 02.09.2008. 93640 P
US 27.03.2009. 163907 P
(86) PCT/US2009055739 02.09.2009.
(96) EP 09792175.3 02.09.2009. En
(87) WO2010028049 11.03.2010. 201010
(97) EP 2331744 15.06.2011. 201124 En
**(54) LOW WEIGHT CARPET AND CARPET TILE AND METHODS OF MANUFACTURE, SIZING AND INSTALLATION**
(71) Interface, Inc., 2859 Paces Ferry Road, Suite 2000, Atlanta, Georgia 30339, US
(72) JONES, Stuart, 103 Prestwick Drive, LaGrange, Georgia 30241, US;
HOBBS, James, LaGrange, Georgia, US;
SHEPPARD, Joel, LaGrange, Georgia, US;
WOODS, James, LaGrange, Georgia, US;
BRADFORD, John, P., LaGrange, Georgia, US;
JONES, William, N., LaGrange, Georgia, US
(74) Phillips & Leigh, 5 Pemberton Row, London EC4A 3BA, GB

**(51) (8)** **EP 2236664**
***D 21B 1/16***
***D 21C 9/00***
***D 21D 1/00***
***D 21H 11/00***
***D 21H 11/18***
(96) EP 09156683.6 30.03.2009. En

(97) EP 2236664 06.10.2010. 201040 En
**(54) Process for the production of nano-fibrillar cellulose suspensions**
(71) Omya Development AG, Baslerstrasse 42, 4665 Oftringen, CH
(72) Gane, Patrick A. C., Studenweg 8, 4852 Rothrist, CH; Schoelkopf, Joachim, Buechbühlstrasse 3, 8956 Killwangen, CH;
Gantenbein, Daniel, Hauptstrasse 39, 4145 Gempen, CH; Schenker, Michel, Baslerstrasse 9, 4665 Oftringen, CH; Pohl, Michael, H.-v. Tuerlin Strasse 11, 9500 Villach, AT; Kübler, Beat, Sperberweg 36, 4104 Oberwil, CH
(74) Tiefbrunner, Vera, Maiwald Patentanwalts GmbH, Elisenhof, Elisenstrasse 3, 80335 München, DE

**(51) (8)** **EP 2329079 ***
***E 01B 1/00***
***E 01B 21/02***
(30) AT 19.09.2008. 51108 U
(86) PCT/AT2009000362 18.09.2009.
(96) EP 09775636.5 18.09.2009. De
(87) WO2010031099 25.03.2010. 201012
(97) EP 2329079 08.06.2011. 201123 De
**(54) TRACK SUPPORTING LAYER**
(71) Gmundner Fertigteile Gesellschaft m.b.H. & Co. KG., Kuferzeile 30, 4810 Gmunden, AT
(72) NEUMANN, Bernhard, Feursteinstrasse 16, A-4810 Gmunden, AT
(74) Sonn & Partner Patentanwälte, Riemergasse 14, 1010 Wien, AT

**(51) (8)** **EP 2334873 ***
***E 01C 11/22***
***E 01C 7/18***
***E 01C 7/26***
***C 08L 95/00***
(30) FR 02.10.2008. 0856683
(86) PCT/EP2009062834 02.10.2009.
(96) EP 09783695.1 02.10.2009. Fr
(87) WO2010037853 08.04.2010. 201014
(97) EP 2334873 22.06.2011. 201125 Fr
**(54) BITUMINOUS COATING WITH GREAT ACOUSTIC PERFORMANCE**
(71) Eurovia, 18 Place de l'Europe, 92500 Rueil-Malmaison, FR
(72) MAZE, Michel, 18 rue Moulis, F-33000 Bordeaux, FR; FAUCON-DUMONT, Stéphane, 3 avenue du Maréchal Leclerc, F-33127 Martignas, FR;
FER, Sébastien, 1 rue du Chanoine Montfort, F-33160 Saint Médard en Jalles, FR
(74) Ahner, Francis, et al, Cabinet Régimbeau, 20, rue de Chazelles, 75847 Paris Cedex 17, FR

**(51) (8)** **EP 2337898 ***
***E 01C 13/08***
(30) US 19.09.2008. 98543 P
US 11.05.2009. 177073 P
(86) PCT/US2009057534 18.09.2009.
(96) EP 09792727.1 18.09.2009. En
(87) WO2010033840 25.03.2010. 201012
(97) EP 2337898 29.06.2011. 201126 En
**(54) SYSTEM AND METHOD FOR STORAGE AND TEMPORARY INSTALLATION OF SECONDARY FLOORING SURFACE**
(71) Textile Management Associates, Inc., 1906 S. Hamilton, Dalton, GA 30720, US
(72) GORDON, Steve, 330 Golf View Drive, Cohutta, Georgia 30710, US;
PARIS, Ryan, 667 Blue Bird Lane, Ringgold, Georgia 30736, US;
BROCK, Gary, 3946 Brock Road, Dalton, Georgia 30721, US; BELLES, Andy, 1820 Tibbs Bridge Road, Chatsworth, Georgia 30705, US
(74) Phillips & Leigh, 5 Pemberton Row, London EC4A 3BA, GB

**(51) (8)** **EP 2324157 ***
***E 01C 19/10***
(30) TR 27.09.2007. 200706652
TR 03.12.2007. 200708336
(86) PCT/TR2008000007 21.01.2008.
(96) EP 08712910.2 21.01.2008. En
(87) WO2009058103 07.05.2009. 200919
(97) EP 2324157 25.05.2011. 201121 En
**(54) A METHOD AND SYSTEM FOR HOT ASPHALT RECYCLING**
(71) E-Mak Makina Insaat Ticaret Ve San. LTD. STI., Yunuseli Mh. M. Fuat Kuscuoglu Cd., No. 63 Simge Tesisleri, Yunuseli / Osmangazi, 16180 Bursa, TR
(72) GENCER, Mehmet Nezir, Yunuseli M.Fuat Kuscuoglu Cad., No:63 Simge Tesisleri Yunuseli, Osmangazi, 16180 Bursa, TR
(74) Kaya, Erdem, et al, Bilen Patent Inc., Hüdavendigar Mh. Biltekin Cd., Akkonak Villalari No. 31/A, Osmangazi, 16090 Bursa, TR

**(51) (8)** **EP 2331753 ***
***E 02B 3/16***
***E 02B 5/02***
(30) IT 11.09.2008. MI20081624
(86) PCT/EP2009006344 02.09.2009.
(96) EP 09778270.0 02.09.2009. En
(87) WO2010028766 18.03.2010. 201011
(97) EP 2331753 15.06.2011. 201124 En
**(54) METHOD AND SYSTEM FOR PUNCTUAL FASTENING A WATERPROOFING MEMBRANE TO HYDRAULIC WORKS**
(71) Carpi Tech B.V. Amsterdam, Balerna Branch, Via Passeggiata 1, 6828 Balerna, CH
(72) SCUERO, Alberto, Carpi Tech BV Amsterdam, Chiasso Branch, Corso San Gottardo 86, 6830 Chiasso 3, CH
(74) Coloberti, Luigi, Ing. Luigi Coloberti, Patents department, Via E. De Amicis 25, 20123 Milan, IT

**(51) (8)** **EP 2331760 ***
***E 04B 1/68***
***F 16J 15/02***
***E 06B 3/62***
(30) SE 30.09.2008. 0802064
(86) PCT/SE2009000420 23.09.2009.
(96) EP 09818049.0 23.09.2009. En
(87) WO2010039077 08.04.2010. 201014
(97) EP 2331760 15.06.2011. 201124 En

**(54) ASSEMBLING OF SEAL AND PLATES TO WALL ELEMENT**
(71) Fläkt Woods AB, Fläktgatan 1, 55184 Jönköping, SE
(72) AXELSSON, Claes-Göran, Södergatan 13, S-553 38 Jönköping, SE
(74) Pitkänen, Hannu Alpo Antero, Patenttitoimisto Pitkänen Oy, P.O. Box 1188, 70211 Kuopio, FI

---

**(51) (8)** **EP 1826330**
***E 04B 2/70***
***B 28B 19/00***
(30) AT 28.02.2006. 3362006
(96) EP 07450035.6 26.02.2007. De
(97) EP 1826330 29.08.2007. 200735 De
**(54) Method for manufacturing a prefabricated wall element**
(71) Innovative Bau GmbH, Innstrasse 2, 6130 Pill, AT
(72) Partoll, Martin, St. Margarethen 185, 6200, AT
(74) Sonn & Partner Patentanwälte, Riemergasse 14, 1010 Wien, AT

---

**(51) (8)** **EP 1959068**
***E 04B 7/02***
***E 04B 7/14***
***E 04D 11/00***
(96) EP 07003415.2 19.02.2007. De
(97) EP 1959068 20.08.2008. 200834 De
**(54) Device for renovating flat roofs**
(71) Terra Consulting GmbH, Berliner Strasse 40, 35415 Pohlheim, DE
(72) Weinberg, Michael, Rebgasse 12, 79618 Rheinfelden, DE
(74) Paul, Dieter-Alfred, et al, Paul & Albrecht, Patentanwaltssozietät, Hellersbergstrasse 18, 41460 Neuss, DE

---

**(51) (8)** **EP 2342394** *
***E 04C 2/04***
(30) IT 07.11.2008. MI20081971
(86) PCT/IB2009007202 20.10.2009.
(96) EP 09759992.2 20.10.2009. En
(87) WO2010052535 14.05.2010. 201019
(97) EP 2342394 13.07.2011. 201128 En
**(54) CONNECTION SYSTEM FOR PREFABRICATED THERMAL BREAK PANELS**
(71) Calisse, Carlo, Via L. Meraviglia 1, 20052 Monza (MB), IT
(72) Calisse, Carlo, Via L. Meraviglia 1, 20052 Monza (MB), IT
(74) Cosenza, Simona, et al, Barzanò & Zanardo Milano S.p.A., Via Borgonuovo, 10, 20121 Milano, IT

---

**(51) (8)** **EP 2326775** *
***E 04C 2/288***
***E 04C 2/04***
(30) SE 28.08.2008. 0801856
(86) PCT/SE2009050969 28.08.2009.
(96) EP 09810316.1 28.08.2009. En
(87) WO2010024766 04.03.2010. 201009
(97) EP 2326775 01.06.2011. 201122 En
**(54) BUILDING ELEMENTS AND METHOD OF ERECTING BUILDINGS WITH SAID BUILDING ELEMENTS**
(71) Epscement International Ab, 13481 Gustavsberg, SE
(72) DACKEFJORD, Håkan, c/o EPSCement International AB, S-13482 Gustavsberg, SE;
ALSTERMO, Hans, c/o EPSCement International AB, S-13482 Gustavsberg, SE;
LANDVIK, Dag, c/o EPSCement International AB, S-13482 Gustavsberg, SE
(74) Strandin, Heléne, Bergenstrahle & Lindvall AB, P.O. Box 17704, 118 93 Stockholm, SE

---

**(51) (8)** **EP 2253772**
***E 04D 13/17***
***E 04D 13/14***
(96) EP 09160024.7 12.05.2009. En
(97) EP 2253772 24.11.2010. 201047 En
**(54) A venting device**
(71) ICOPAL A/S, Mileparken 38, 2730 Herlev, DK
(72) Jensen, Eirik Sandberg, Naturparken 1, Vindinge, 4000 Roskilde, DK;
Andersen, Kenneth, Stadion Allé 3 st. tv, 9530 Støvring, DK
(74) Plougmann & Vingtoft A/S, Sundkrogsgade 9, P.O. Box 831, 2100 Copenhagen, DK

---

**(51) (8)** **EP 2343419**
***E 04F 13/08***
***E 04F 21/18***
***E 04F 21/22***
(30) US 22.02.2005. 906478
US 16.02.2006. 307678
(96) EP 11000098.1 21.02.2006. En
(97) EP 2343419 13.07.2011. 201128 En
**(54) Tile alignment and leveling device and method for using same**
(71) Davinci Italia/USA Group, LLC, 100 W. Burlington, Fairfield, IA 52556, US
(72) Kufner, Edward A., P.O. Box 108, Fairfield, IA 52556, US;
Volponi, Michele, 3550 270th Ave., Keokuk, Iowa 52632, US
(74) Richards, John, et al, Ladas & Parry LLP, Dachauerstrasse 37, 80335 München, DE

---

**(51) (8)** **EP 2122171** *
***E 04H 4/12***
***F 04B 49/06***
***F 04B 49/20***
***F 04D 15/00***
***G 05D 7/06***
(30) US 11.12.2006. 609101
(86) PCT/US2007025250 11.12.2007.
(96) EP 07862719.7 11.12.2007. En
(87) WO2008073386 19.06.2008. 200825
(97) EP 2122171 25.11.2009. 200948 En
**(54) FLOW CONTROL**
(71) Pentair Water Pool and Spa, Inc., 1620 Hawkins Avenue, Sanford, NC 27330, US;
Danfoss Low Power Drives, a Division of Danfoss Drives A/S, Ulsnaes 1, 6300 Graasten, DK
(72) STILES, Robert W., 217 Arbordale Court, Cary, NC 27511, US;
BERTHELSEN, Lars Hoffmann, Harevaenget 28, 6000 Kolding, DK;
WESTERMANN-RASMUSSEN, Peter, Ahlmannsvej 45 (1), 6400 Soenderborg, DK;
KJAER, Gert, Falkevej 4, 6400 Soenderborg, DK;

LUNGEANU, Florin, Reefslagervaenget 8, 6320 Egernsund, DK
(74) Lawrence, John, Barker Brettell LLP, 100 Hagley Road, Edgbaston, Birmingham, B16 8QQ, GB

**(51) (8)** **EP 2331779** *
***E 05B 27/04***
***E 05B 15/12***
***E 05B 19/02***
***E 05B 27/10***
(30) SE 30.09.2008. 0802056
(86) PCT/SE2009000430 30.09.2009.
(96) EP 09818050.8 30.09.2009. En
(87) WO2010039078 08.04.2010. 201014
(97) EP 2331779 15.06.2011. 201124 En
**(54) A LOCK AND KEY COMBINATION WITH A LARGE NUMBER OF CODES**
(71) Winloc AG, P.O. Box 4233, Baarerstrasse 43, 6304 Zug, CH
(72) WIDEN, Bo, Björkvägen 16 B, S-644 36 Torshälla, SE
(74) Modin, Jan, Noréns Patentbyrå AB, Box 10198, 100 55 Stockholm, SE

**(51) (8)** **EP 2253788**
***E 05D 11/10***
***E 05F 1/00***
(30) FR 18.05.2009. 0953298
(96) EP 10163091.1 18.05.2010. Fr
(97) EP 2253788 24.11.2010. 201047 Fr
**(54) Device for blocking the rotation of a door and door comprising such a device**
(71) SAINT-GOBAIN SEVA, 43, rue du Pont de Fer, B.P. 176, 71105 Chalon-sur-Saône, FR
(72) Piponniau, Nicolas, 6 rue des Tonneliers, 71100, Chalon-sur-Saône, FR;
L'Huillier, Philippe, Le Bourg, 71390, Sassangy, FR
(74) Jamet, Vincent, Saint-Gobain Recherche, Département Propriété Industrielle, 39 Quai Lucien Lefranc, 93300 Aubervilliers, FR

**(51) (8)** **EP 2256275**
***E 05D 11/10***
***E 05F 1/00***
***E 05F 3/22***
(30) FR 18.05.2009. 0953297
(96) EP 10163089.5 18.05.2010. Fr
(97) EP 2256275 01.12.2010. 201048 Fr
**(54) Rotation blocking device of a door and door equipped with such device**
(71) SAINT-GOBAIN SEVA, 43, rue du Pont de Fer, B.P. 176, 71105 Chalon-sur-Saône, FR
(72) Piponniau, Nicolas, 6 rue des Tonneliers, 71100 Chalon sue Saône, FR;
L'Huillier, Philippe, Le Bourg, 71390 Sassangy, FR
(74) Jamet, Vincent, Saint-Gobain Recherche, Département Propriété Industrielle, 39 Quai Lucien Lefranc, 93300 Aubervilliers, FR

**(51) (8)** **EP 2324179** *
***E 05F 15/16***
***E 05F 15/14***
***E 05F 15/00***
(30) DE 10.09.2008. 102008046538
(86) PCT/EP2009006337 02.09.2009.
(96) EP 09778263.5 02.09.2009. De
(87) WO2010028765 18.03.2010. 201011
(97) EP 2324179 25.05.2011. 201121 De
**(54) DRIVE SYSTEM FOR A DOOR**
(71) Sommer Antriebs- und Funktechnik GmbH, Hans-Böckler-Strasse 21-27, 73230 Kirchheim/Teck, DE
(72) SCHAAF, Gerd, Birkhahnweg 53, 73230 Kirchheim/Teck, DE
(74) Ruckh, Rainer Gerhard, Fabrikstrasse 18, D-73277 Owen/Teck, DE

**(51) (8)** **EP 2093368**
***E 06B 1/62***
(30) AT 22.02.2008. 1102008 U
(96) EP 09153104.6 18.02.2009. De
(97) EP 2093368 26.08.2009. 200935 De
**(54) Reveal connection profile for components bordering plaster**
(71) Kassmannhuber, Peter, Olsach 47, 9701 Rothenthurn, AT; Mick, Stefan, Landstrasse 13, 9545 Radenthein, AT
(72) Kassmannhuber, Peter, Olsach 47, 9701 Rothenthurn, AT; Mick, Stefan, Landstrasse 13, 9545 Radenthein, AT
(74) Babeluk, Michael, Patentanwalt, Mariahilfer Gürtel 39/17, 1150 Wien, AT

**(51) (8)** **EP 2334898** *
***E 21B 43/00***
***E 21B 43/24***
***E 21B 43/243***
***E 21B 41/00***
***C 09K 8/00***
***C 10G 47/00***
(30) GB 08.09.2008. 0816432
GB 16.10.2008. 0819008
(86) PCT/GB2009002155 08.09.2009.
(96) EP 09785075.4 08.09.2009. En
(87) WO2010026400 11.03.2010. 201010
(97) EP 2334898 22.06.2011. 201125 En
**(54) PROCESS FOR GENERATING HYDROGEN**
(71) Iris-Forskningsinvest AS, Prof Olav Hanssonsvei 15, 4020 Stavanger, NO;
Cockbain, Julian, 42 Southmoor Road, Oxford OX2 6RD, GB
(72) SURGUCHEV, Leonid, IRIS-Forskningsinvest AS, Prof Olav Hanssonsvei 15, N-4020 Stavanger, NO;
BERENBLYM, Roman, IRIS-Forskningsinvest AS, Prof Olav Hanssonsvei 15, N-4020 Stavanger, NO;
DMITRIEVSKY, Anatoly, IRIS-Forskningsinvest AS, Prof Olav Hanssonsvei 15, N-4020 Stavanger, NO
(74) Cockbain, Julian, Dehns, St Bride's House, 10 Salisbury Square, London, EC4Y 8JD, GB

**(51) (8)** **EP 2246543**
***F 02B 37/007***
***F 02B 37/02***
***F 02B 37/18***
***F 01N 13/10***
***F 02F 1/24***
(96) EP 09157069.7 01.04.2009. De
(97) EP 2246543 03.11.2010. 201044 De
**(54) Cylinder head with two exhaust manifolds and method to operate an internal combustion engine with such a cylinder head**

(71) Ford Global Technologies, LLC, Fairlane Plaza South, 330 Town Center Drive, Suite 800, Dearborn, MI 48126, US
(72) Schorn, Norbert, Auenrathweg 12, 52080, Aachen, DE; Kindl, Helmut, Zevensterweg 8, 6291 CD Vaals, NL; Smiljanovski, Vanco, Am Muehlenkreuz 11, 50181, Bedburg, DE;
Spaeder, Uwe, Am alten Bahndamm 15, 52072, Aachen, DE; Stalman, Rob, Im Heidfeld 13, 52538, Selfkant, DE
(74) Drömer, Hans-Carsten, Ford-Werke Aktiengesellschaft, Patentabteilung NH/DRP, Henry-Ford-Strasse 1, 50725 Köln, DE

---

**(51) (8)** **EP 2249021**
***F 02M 47/02***
***F 02M 55/00***
***F 02M 69/54***
***F 02M 63/02***
(96) EP 09159577.7 06.05.2009. En
(97) EP 2249021 10.11.2010. 201045 En
**(54) Fuel Delivery System**
(71) Delphi Technologies Holding S.à.r.l., Avenue de Luxembourg, 4940 Bascharage, LU
(72) Daniel, Patrick, 40 bis, rue Albert 1er, 41000, Blois, FR; Pagoto, Marcos, 11 rue Franciade, 41000, Blois, FR
(74) Gregory, John David Charles, Delphi Diesel Systems, Patent Department, Courteney Road, Gillingham, Kent ME8 0RU, GB

---

**(51) (8)** **EP 2243950**
***F 02M 55/00***
(96) EP 09158131.4 17.04.2009. En
(97) EP 2243950 27.10.2010. 201043 En
**(54) A connector arrangement for a fluid system**
(71) Delphi Technologies Holding S.à.r.l., Avenue de Luxembourg, 4940 Bascharage, LU
(72) Legrand, Philippe, 39 Rue de Sully, 41350 St Gervais la Foret, FR;
Hausmann, Pascal, 146 Avenue des Noels, 41350 Vineuil, FR
(74) Gregory, John David Charles, Delphi Diesel Systems, Patent Department, Courteney Road, Gillingham, Kent ME8 0RU, GB

---

**(51) (8)** **EP 2324242** *
***F 03D 3/04***
***F 03D 11/00***
(30) CA 05.06.2008. 2633876
(86) PCT/CA2009000797 05.06.2009.
(96) EP 09757019.6 05.06.2009. En
(87) WO2009146557 10.12.2009. 200950
(97) EP 2324242 25.05.2011. 201121 En
**(54) TURBINE APPARATUS**
(71) Organoworld Inc., 560 McEachran, Montreal, QC H2V 3C4, CA
(72) CHURCHILL, Frederick, 560 McEachran, Montreal (Quebec) H2V 3C4, CA;
PERRON, Jean, 90 rue De La Cote-D'Azur, Chicoutimi Quebec G7J 4V6, CA;
FORTIN, Guy, 2217 rue de Regina, Jonquiere (Quebec) G7S 3C7, CA
(74) Kling, Simone, Lavoix Munich, Bayerstrasse 85a, 80335 München, DE

---

**(51) (8)** **EP 2071185**
***F 04B 15/04***
***F 04B 1/00***
(30) RU 11.09.2006. 2006132559
(86) PCT/RU2007000468 30.08.2007.
(96) EP 07834982.6 30.08.2007. Ru
(87) WO2008033055 20.03.2008. 200812
(97) EP 2071185 17.06.2009. 200925 En
**(54) MULTIPLUNGER HORIZONTAL SINGLE-ACTING PUMP**
(71) Otkrytoe Aktsionernoe Obschestvo, 'Bulanashskii Mashzavod', Bulanash, Artemovskii Raion, Sverdlovskaya obl. 623794, RU
(72) GAZAROV, Rudolf Ervandovich, ul. Dnepropetrovskaya, 3-1-16, Moscow, 117525, RU;
SIDORENKO, Oleg Yakovlevich, d. 10, korp. 1, kv. 21, ul. 2-ya Pugachevskaya, Moscow, 107061, RU
(74) Sloboshanin, Sergej, et al, V. Füner, Ebbinghaus, Finck, Hano, Mariahilfplatz 3, 81541 München, DE

---

**(51) (8)** **EP 2339202**
***F 16F 7/14***
(96) EP 09016013.6 24.12.2009. De
(97) EP 2339202 29.06.2011. 201126 De
**(54) Dampening and spring arrangement and method for its production**
(71) Sebert Schwingungstechnik GmbH, Hans-Böckler-Strasse 35, 73230 Kirchheim/Teck, DE
(72) Sebert, Karl, Hans-Böckler-Straße 35, 73230 Kirchheim/Teck, DE
(74) Kocher, Mark Werner, et al, Magenbauer & Kollegen, Patentanwälte, Plochinger Strasse 109, 73730 Esslingen, DE

---

**(51) (8)** **EP 2337971** *
***F 16H 3/72***
***F 16H 3/64***
(30) AU 16.09.2008. 2008904685
(86) PCT/AU2009001187 10.09.2009.
(96) EP 09813875.3 10.09.2009. En
(87) WO2010031108 25.03.2010. 201012
(97) EP 2337971 29.06.2011. 201126 En
**(54) AN EPICYCLIC TRANSMISSION**
(71) Dean, Malcolm Leonard Stephen, 18 Menkira Street, Mansfield, Brisbane QLD 4122, AU
(72) Dean, Malcolm Leonard Stephen, 18 Menkira Street, Mansfield, Brisbane QLD 4122, AU
(74) Ruhrmann, Andrea Elizabeth, Kilburn & Strode LLP, 20 Red Lion Street, London WC1R 4PJ, GB

---

**(51) (8)** **EP 2336601**
***F 16H 37/06***
***F 16H 48/10***
(30) SK 16.12.2009. 500592009
(96) EP 10475501.2 19.01.2010. Sk
(97) EP 2336601 22.06.2011. 201125 En
**(54) Transmission with one input and two output opposed shafts**
(71) Transmisie engineering a.s., Pavla Mudrona 10, 03601 Martin, SK
(72) Peroncík, Miroslav, Nezvalova 5234/3, 03601, Martin, SK;
Peroncík, Milos, Nezvalova 5234/3, 03601, Martin, SK;
Sirán, Stanislav, P.V. Rovnianka 5194/1, 03601, Martin, SK;

Jurkovic, Viliam, Kernerova 6, 03601, Martin, SK;
Baricák, Milan, Socovce 12, 03843, Klástor pod Znievom, SK;
Hrcek, Stanislav, Trencianska 1589/2, 01008, Zilina, SK
(74) Belicka, Ivan, Markoffice, Svermova 21, SK-974 04 Banska Bystrica, SK

**(51) (8)** **EP 2261542**
***F 16L 11/08***
(30) ES 03.06.2009. 200930257
(96) EP 10380076.9 02.06.2010. Es
(97) EP 2261542 15.12.2010. 201050 En
**(54) Pipe for water-supply systems**
(71) ABN Pipe Systems, S.L.U., Ctra. Baños de Arteixo, 48, 15008 A Coruña, ES
(72) Vázquez Sánchez, Javier Antonio, Ctra. Baños de Arteixo, Nº 48, 15008 -, Coruña, ES
(74) Carvajal y Urquijo, Isabel, et al, Clarke, Modet & Co., c/ Goya, 11, 28001 Madrid, ES

**(51) (8)** **EP 2216582**
***F 16M 13/02***
(30) US 06.02.2009. 367376
(96) EP 09157597.7 08.04.2009. En
(97) EP 2216582 11.08.2010. 201032 En
**(54) System for mounting an object to a surface**
(71) Omnimount Systems, INC., 8201 South 48th Street, Phoenix AZ Arizona 85044, US
(72) Townsend, Michael, 3414 East Virgil Drive, Gilbert, AZ 85298, US;
Plehn, Patrick, 3381 West Gary Drive, Chandler, AZ 85226, US;
CharVONia, Keith, 2018 East Cornell Drive, Tempe, AZ 85283, US
(74) Viering, Jentschura & Partner, Postfach 22 14 43, 80504 München, DE

**(51) (8)** **EP 2331872 ***
***F 21V 19/04***
***F 21V 17/06***
(30) AU 09.09.2008. 2008904670
AU 20.07.2009. 2009903376
(86) PCT/AU2009001121 31.08.2009.
(96) EP 09812516.4 31.08.2009. En
(87) WO2010028423 18.03.2010. 201011
(97) EP 2331872 15.06.2011. 201124 En
**(54) COUPLING AND METHOD FOR USE WITH A LAMP FITTING**
(71) 300K Enterprises Pty Ltd, 22 Park Street, Wynyard, Tasmania 7325, AU
(72) TREWIN, Christopher, Scott, 22 Park Street, Wynyard, Tasmania 7325, AU
(74) Marles, Alan David, Stevens Hewlett & Perkins, 1 St Augustine's Place, Bristol BS1 4UD, GB

**(51) (8)** **EP 2326875 ***
***F 23C 10/00***
(30) IT 08.09.2008. RM20080481
(86) PCT/EP2009061636 08.09.2009.
(96) EP 09782769.5 08.09.2009. En
(87) WO2010026259 11.03.2010. 201010
(97) EP 2326875 01.06.2011. 201122 En
**(54) PLANT AND PROCESS FOR THE LOOPING-TYPE COMBUSTION OF SOLID CARBON- CONTAINING FUELS**
(71) Consiglio Nazionale delle Ricerche, Piazzale Aldo Moro 7, 00185 Roma, IT
(72) SALATINO, Piero, Via Torre Cervati 1, I-80123 Naples, IT;
SENNECA, Osvalda, Via Manzoni 38, I-80123 Naples, IT
(74) Raimondi, Adriana, et al, Cavattoni - Raimondi, Viale dei Parioli, 160, 00197 Roma, IT

**(51) (8)** **EP 2331875 ***
***F 23J 15/04***
***F 23J 15/06***
***B 01D 47/06***
***B 01D 53/78***
(30) DK 07.09.2008. 200801253
(86) PCT/DK2009050228 07.09.2009.
(96) EP 09776278.5 07.09.2009. En
(87) WO2010025739 11.03.2010. 201010
(97) EP 2331875 15.06.2011. 201124 En
**(54) METHOD AND SYSTEM FOR COOLING HOT GASES BY WATER INJECTION**
(71) Dall Energy Holding ApS, Sjaelsøvej 53, 3460 Birkerød, DK
(72) BENTZEN, Jens Dall, Sjælsøvej 53, DK-3460 Birkerød, DK
(74) Plougmann & Vingtoft A/S, Sundkrogsgade 9, P.O. Box 831, 2100 CopenhagenØ, DK

**(51) (8)** **EP 2249088**
***F 24C 15/20***
(96) EP 09425162.6 28.04.2009. It
(97) EP 2249088 10.11.2010. 201045 En
**(54) Extractor hood, in particular for domestic environments**
(71) Elica S.p.A., Via Dante 288, 60044 Fabriano (Ancona), IT
(72) Casoli, Francesco, Località Colle Paganello, 42, 60044 Fabriano (Ancona), IT
(74) Baroni, Matteo, Bugnion S.p.A., Viale Lancetti, 17, 20158 Milano, IT

**(51) (8)** **EP 2338005 ***
***F 24D 13/02***
***E 04C 2/52***
***F 28F 21/04***
(30) IN 25.06.2008. CH15402008
IN 01.09.2008. CH21402008
WO 22.09.2008. PCT/IN2008/000601
IN 14.05.2009. CH11222009
(86) PCT/EP2009057971 25.06.2009.
(96) EP 09769320.4 25.06.2009. En
(87) WO2009156472 30.12.2009. 200953
(97) EP 2338005 29.06.2011. 201126 En
**(54) A STONE PANEL**
(71) Jacob, George, No 249, 3rd Cross 1st Main, Domalur, Bangalore 650 071, IN;
English, Anne, No 249, 3rd Cross 1st Main, Domalur, Bangalore 650 071, IN
(72) The designation of the inventor has not yet been filed
(74) McBride, Peter Hill, Murgitroyd & Company, Scotland House, 165-169 Scotland Street, Glasgow, G5 8PL, GB

**(51) (8)** **EP 2187144**
***F 24H 3/00***
(96) EP 08019898.9 14.11.2008. De
(97) EP 2187144 19.05.2010. 201020 De
**(54) Electric plate radiator**
(71) H.M. Heizkörper GmbH + Co. KG, Wachstedter Strasse, 37351 Dingelstädt, DE
(72) Muhr, Christian, Bei der neuen Kirche, 37351 Kefferhausen, DE
(74) Dörner, Martin, Dörner, Kötter & Kollegen, Patentanwälte, Körnerstraße 27, 58095 Hagen, DE

**(51) (8)** **EP 2129973 ***
***F 24J 1/00***
(30) GB 23.02.2007. 0703612
(86) PCT/GB2008000630 25.02.2008.
(96) EP 08718578.1 25.02.2008. En
(87) WO2008102164 28.08.2008. 200835
(97) EP 2129973 09.12.2009. 200950 En
**(54) A METHOD OF GENERATING HEAT**
(71) Collins, Mark, P.O. Box 133, Etchingham, East Sussex TN19 7ZJ, GB
(72) Collins, Mark, P.O. Box 133, Etchingham, East Sussex TN19 7ZJ, GB
(74) Hutchins, Michael Richard, et al, M.R. Hutchins & Co, The Warehouse, 1 Draper Street, Southborough, Tunbridge Wells, Kent TN4 0PG, GB

**(51) (8)** **EP 2334993 ***
***F 24J 3/08***
***E 21B 10/00***
***F 03G 4/00***
***F 16L 1/028***
***F 16L 1/032***
***F 25B 27/00***
***F 25B 41/00***
(30) CA 12.09.2008. 2639648
(86) PCT/CA2009001267 11.09.2009.
(96) EP 09812579.2 11.09.2009. En
(87) WO2010028496 18.03.2010. 201011
(97) EP 2334993 22.06.2011. 201125 En
**(54) SYSTEM AND METHOD FOR GEOTHERMAL CONDUIT LOOP IN-GROUND INSTALLATION AND SOIL PENETRATING HEAD THEREFOR**
(71) Desmeules, Alain, Bureau 103, 4800 St-Ambroise, Montreal, Québec H4C 3N8, CA
(72) Desmeules, Alain, Bureau 103, 4800 St-Ambroise, Montreal, Québec H4C 3N8, CA
(74) Fleck, Hermann-Josef, Patentanwälte Jeck-Fleck-Herrmann, Klingengasse 2, 71665 Vaihingen/Enz, DE

**(51) (8)** **EP 2338016 ***
***F 26B 5/06***
(30) US 16.09.2008. 283885
(86) PCT/US2009005132 15.09.2009.
(96) EP 09814875.2 15.09.2009. En
(87) WO2010033169 25.03.2010. 201012
(97) EP 2338016 29.06.2011. 201126 En
**(54) APPARATUS AND METHODS FOR MAKING, STORING, AND ADMINISTERING FREEZE-DRIED MATERIALS SUCH AS FREEZE-DRIED PLASMA**
(71) Hemcon Medical Technologies, Inc., 10575 SW Cascade Avenue, Portland, OR 97223, US
(72) McCARTHY, Simon, J., 3715 NW Gordon Street, Portland, OR 97210, US
(74) Dee, Ian Mark, Potter Clarkson LLP, Park View House, 58 The Ropewalk, Nottingham, NG1 5DD, GB

**(51) (8)** **EP 2335020 ***
***G 01B 13/12***
***G 01B 21/14***
***G 01B 21/30***
(30) FR 06.10.2008. 0856766
(86) PCT/FR2009051896 06.10.2009.
(96) EP 09755968.6 06.10.2009. Fr
(87) WO2010040943 15.04.2010. 201015
(97) EP 2335020 22.06.2011. 201125 Fr
**(54) INSTALLATION FOR CHECKING THE QUALITY OF A SUCCESSION OF ARTICLES, IN PARTICULAR BOTTLES**
(71) Ermi 77, 6 impasse Léon Blum, 77370 Nangis, FR
(72) CLOAREC, Didier, 21 rue Jame, F-77870 Vulaines sur Seine, FR;
CAZADE, Frédéric, 12 rue des Faienciers, Résidence de Ravannes, F-77250 Ecuelles, FR;
ROCCHETTI, Xavier, 6 rue Montesquiou, F-77120 Mauperthuis, FR
(74) Legrand, Olivier, et al, Pontet Allano & Associés, 25, rue Jean Rostand, Parc Orsay Université, FR-91893 Orsay Cedex, FR

**(51) (8)** **EP 2146184**
***G 01C 21/34***
(30) DE 16.07.2008. 102008040470
(96) EP 09100292.3 26.05.2009. De
(97) EP 2146184 20.01.2010. 201003 De
**(54) Method for inputting and presenting information in a navigation system**
(71) Robert Bosch GmbH, Postfach 30 02 20, 70469 Stuttgart, DE
(72) Mueller, Guido, Kaethe-Kollwitz-Str. 23, 06484, Quedlinburg, DE;
Stuebner, Guido, Hagenbleckstr. 8, 30455, Hannover, DE

**(51) (8)** **EP 2095082 ***
***G 01K 5/00***
***G 01K 5/48***
***G 01K 15/00***
***G 01K 5/54***
***G 01D 5/26***
***G 01K 5/52***
(30) US 19.12.2006. 875719 P
US 29.10.2007. 978538
(86) PCT/IB2007004148 19.12.2007.
(96) EP 07859217.7 19.12.2007. En
(87) WO2008075197 26.06.2008. 200826
(97) EP 2095082 02.09.2009. 200936 En
**(54) FIBER OPTIC TEMPERATURE SENSOR**
(71) Vibrosystm Inc., 2727, East Jacques-Cartier Boulevard, Longueuil, Québec J4N 1L7, CA
(72) CLOUTIER, Mathieu, 57, rue Theberge, Richelieu, Quebec J3L 6S1, CA;
PRONOVOST, Jean, 40, des Jacinthes, St-Mathieu de Beloeil, Quebec J3G 4S5, CA;
CLOUTIER, Marius, 2727, Boul. Jacques-Cartier Est, Longueuil, Quebec J4N 1L7, CA

(74) Patentanwälte Freischem, Salierring 47-53, 50677 Köln, DE

**(51) (8)** **EP 2249141**
***G 01N 11/04***
(30) US 06.05.2009. 176019 P
EP 06.05.2009. 09159545
(96) EP 10162196.9 06.05.2010. En
(97) EP 2249141 10.11.2010. 201045 En
**(54) A viscometer and a method for operating the same**
(71) Poulten Selfe & Lee Ltd., Russell House, Burnham Business Park, Burnham-on-Crouch, Essex CM0 8TE, GB
(72) Gosling, Stephen J., Bækgade 10, Blans, 6400, Sønderborg, DK;
Mylrea, Ian, Finchley House, 51 High Road, Rayleigh, Essex, SS6 7SE, GB
(74) Inspicos A/S, Kogle Allé 2, P.O. Box 45, 2970 Hørsholm, DK

**(51) (8)** **EP 2064535 ***
***G 01N 23/04***
***G 01N 23/10***
(30) US 18.09.2006. 825993 P
US 25.09.2006. 826752 P
US 07.03.2007. 893516 P
US 10.05.2007. 917235 P
(86) PCT/CA2007001658 17.09.2007.
(96) EP 07815851.6 17.09.2007. En
(87) WO2008034232 27.03.2008. 200813
(97) EP 2064535 03.06.2009. 200923 En
**(54) METHOD AND APPARATUS FOR ASSESSING CHARACTERISTICS OF LIQUIDS**
(71) Optosecurity Inc., 505 Blvd. du Parc Technologique, Québec QC G1P 4S9, CA
(72) GUDMUNDSON, Dan, 7 Jardin de Merici, 1002, Quebec, Quebec G1S 4N8, CA;
DOYLE, Aidan, Zwergerstrasse 7b, Unterbiberg, D-85579 Bavaria, DE;
GEORGIEV, Stephan, 3359 rue des Quatre Saisons, St-Hubert, Quebec J3Y 8P3, CA;
PHAM, Vinh Phuc, 860, Rue Bord-de-l'eau, Donnacona, Québec G3M 1M9, CA
(74) Callon de Lamarck, Jean-Robert, et al, Cabinet Regimbeau, 20 rue de Chazelles, 75847 Paris cedex 17, FR

**(51) (8)** **EP 2331944 ***
***G 01N 23/04***
***G 01F 23/288***
***G 01N 23/10***
(30) US 05.09.2008. 94743 P
US 15.09.2008. 97060 P
US 10.02.2009. 151242 P
WO 17.11.2008. PCT/CA2008/002025
(86) PCT/CA2009000395 27.03.2009.
(96) EP 09810945.7 27.03.2009. En
(87) WO2010025539 11.03.2010. 201010
(97) EP 2331944 15.06.2011. 201124 En
**(54) METHOD AND SYSTEM FOR PERFORMING X-RAY INSPECTION OF A LIQUID PRODUCT AT A SECURITY CHECKPOINT**
(71) Optosecurity Inc., 505 Blvd. du Parc Technologique, Québec, QC G1P 4S9, CA
(72) BOUCHARD, Michel, 4802 Rue des Grbes, Saint-Augustin-de-Desmaures, Québec G3A 2B9, CA;
GUDMUNDSON, Dan, 7 Jardin de Mérici 1002, Québec, Québec G1S 4N8, CA;
BOURBEAU, Eric, 656 de Norvge, app. 5, Québec, Québec G1X 3E8, CA
(74) Kurtz, Laurent Charles Edmond, Santarelli, 14 avenue de la Grande Armée, 75017 Paris, FR

**(51) (8)** **EP 2126556 ***
***G 01N 27/26***
***G 06K 7/10***
***G 01N 35/00***
***A 61B 5/145***
***B 01L 3/00***
(30) KR 02.03.2007. 20070021086
(86) PCT/KR2008001105 26.02.2008.
(96) EP 08723143.7 26.02.2008. En
(87) WO2008108548 12.09.2008. 200837
(97) EP 2126556 02.12.2009. 200949 En
**(54) ELECTROCHEMICAL BIOSENSOR MEASURING SYSTEM**
(71) i-Sens, Inc., 465-14 Wolgye-4-dong, Nowon-gu, Seoul 139-845, KR
(72) KIM, Keun Ki, 306-404 Jugong 3danji Apt., 347 Chang-1dong, Dobong-gu, Seoul 132-781, KR;
KIM, Moon Hwan, 302 134-19 Jegi-2dong, Dongdaemun-gu, Seoul 130-062, KR;
YOO, Jae Hyun, 258-188 Mia-9dong, Gangbuk-gu, Seoul 142-808, KR;
CUI, Gang, 201-508 Hanil2cha Apt., Wolgye-dong, Nowon-gu, Seoul 139-050, KR;
NAM, Hakhyun, 101-206 Hanyang Apt., 133-1 Beon-3dong, Gangbuk-gu, Seoul 142-063, KR;
CHA, Geun Sig, 9-78 Hongeun-dong, Seodaemun-gu, Seoul 120-841, KR
(74) Office Freylinger, P.O. Box 48, 8001 Strassen, LU

**(51) (8)** **EP 2331955 ***
***G 01N 33/48***
***G 01N 24/08***
***G 01N 33/483***
***G 01R 33/465***
(30) US 18.08.2008. 136198 P
CA 15.10.2008. 2641131
(86) PCT/CA2009001314 18.08.2009.
(96) EP 09807801.7 18.08.2009. En
(87) WO2010020058 25.02.2010. 201008
(97) EP 2331955 15.06.2011. 201124 En
**(54) A METHOD OF DIAGNOSING A RESPIRATORY DISEASE**
(71) The Governors of the University of Alberta, Suite 4000, 10230 Jasper Avenue, Edmonton, Alberta T5J 4P6, CA
(72) ADAMKO, Darryl J., c/o Medical Research Diagnostics Centre, 101 NANUC, University of Alberta, Edmonton, Alberta T6G 2E1, CA;
SAUDE, Erik, c/o Medical Research Diagnostics Centre, 101 NANUC, University of Alberta, Edmonton, Alberta T6G 2E1, CA;
ROWE, Brian, c/o Medical Research Diagnostics Centre, 101 NANUC, University of Alberta, Edmonton, Alberta T6G 2E1, CA;

SYKES, Brian, c/o Medical Research Diagnostics Centre, 101 NANUC, University of Alberta, Edmonton, Alberta T6G 2E1, CA;
MOQBEL, Redwan, 603 Basic Medical Sciences Bldg., 730 William Avenue, Winnipeg, Manitoba R3E 0W3, CA
(74) Swinkels, Bart Willem, Nederlandsch Octrooibureau, J. W. Frisolaan 13, 2517 JS Den Haag, NL

**(51) (8)** **EP 2342562** *
***G 01N 33/53***
(30) US 30.09.2008. 101471 P
(86) PCT/US2009059057 30.09.2009.
(96) EP 09818450.0 30.09.2009. En
(87) WO2010039850 08.04.2010. 201014
(97) EP 2342562 13.07.2011. 201128 En
**(54) IMPROVED METHOD OF RNA DISPLAY**
(71) Abbott Laboratories, 100 Abbott Park Road, Abbott Park, Illinois 60064-3500, US
(72) HSIEH, Chung-ming, 22 Olde Field Road, Newton, MA 02459-2733, US;
KUTSKOVA, Yuliya, A., 183 Whitney Street, Northborough, MA 01532, US;
MEMMOTT, John, E., 10 Cody Road, Framingham, MA 01701, US
(74) Modiano, Micaela Nadia, et al, Modiano & Partners, Thierschstrasse 11, 80538 München, DE

**(51) (8)** **EP 2326955** *
***G 01N 33/533***
***G 01N 33/58***
***C 07K 1/13***
***C 09K 11/77***
***G 01N 21/64***
(30) EP 19.09.2008. 08016549
DE 22.09.2008. 102008048353
DE 23.09.2008. 102008048605
(86) PCT/EP2009005846 12.08.2009.
(96) EP 09777830.2 12.08.2009. De
(87) WO2010031471 25.03.2010. 201012
(97) EP 2326955 01.06.2011. 201122 De
**(54) METHOD FOR MARKING AND/OR IDENTIFYING BIOMOLECULES**
(71) Inbio Prof. Jürgen Büddefeld Dr. Peter Klauth, Prof. Manfred Rietz Gbr, Ringstrasse 3, 47239 Duisburg, DE
(72) KLAUTH, Peter, Alter Sportplatz 17, 41189 Mönchengladbach, DE
(74) Strehlke, Ingo Kurt, Patentanwälte, Gesthuysen, von Rohr & Eggert, Huyssenallee 100, 45128 Essen, DE

**(51) (8)** **EP 2239580**
***G 01N 33/574***
(96) EP 09425136.0 09.04.2009. En
(97) EP 2239580 13.10.2010. 201041 En
**(54) Determination of 5-ASA efficacy in CRC prevention and/or treatment by gene expression analysis**
(71) Sofar SPA, Via Firenze 40, 20060 Trezzano Rosa (MI), IT
(72) Grande, Alexis, Via dei Glicini, 61/4, 41100 Modena, IT;
Parenti, Sandra, Via Firenze, 198, 41100 Modena, IT;
Ferrarini, Fabrizio, Via Ventimiglia, 121, 41100 Modena, IT
(74) Pistolesi, Roberto, et al, Dragotti & Associati Srl, Via Marina 6, 20121 Milano, IT

**(51) (8)** **EP 2336779**
***G 01N 33/574***
(30) US 19.02.2004. 545581 P
US 20.02.2004. 545900 P
(96) EP 10181573.6 18.01.2005. En
(97) EP 2336779 22.06.2011. 201125 En
**(54) Identification of cancer protein biomarkers using proteomic techniques**
(71) Yale University, Two Whitney Avenue, New Haven, CT 06511, US
(72) Mor, Gil G., 817 Wallingford Road, Cheshire, CT 06410, US;
Ward, David C., 216 Royal Ascot Drive, Las Vegas, NV 89144, US;
Bray-Ward, Patricia, 216 Royal Ascot Drive, Las Vegas, NV 89144, US
(74) HOFFMANN EITLE, Patent- und Rechtsanwälte, Arabellastraße 4, 81925 München, DE

**(51) (8)** **EP 2330424**
***G 01N 33/68***
(30) EP 02.07.2008. 08450098
(96) EP 11159730.8 02.07.2009. En
(97) EP 2330424 08.06.2011. 201123 En
**(54) COPD diagnosis**
(71) Aposcience AG, Rauhensteingasse 4/3, 1010 Wien, AT
(72) Ankersmit, Jan Hendrik, Waaggasse 17/19/26, 1040, Vienna, AT
(74) Sonn & Partner Patentanwälte, Riemergasse 14, 1010 Wien, AT

**(51) (8)** **EP 2331965** *
***G 01N 33/68***
(30) GB 28.08.2008. 0815576
(86) PCT/GB2009051047 21.08.2009.
(96) EP 09785512.6 21.08.2009. En
(87) WO2010023471 04.03.2010. 201009
(97) EP 2331965 15.06.2011. 201124 En
**(54) ANALYSIS OF GLYCATED PROTEINS**
(71) Universite De Geneve, Rue du Général Dufour 24, 1211 Genve 4, CH
(72) SANCHEZ, Jean-Charles, 6 chemin des Cottenets, CH-1233 Bernex, CH;
PRIEGO-CAPOTE, Feliciano, 2 Delineantes Street, E-14007 Cordoba, ES
(74) reuteler & cie SA, Chemin de la Vuarpillire 29, 1260 Nyon, CH

**(51) (8)** **EP 2233932**
***G 01P 3/68***
***G 01P 3/36***
***A 63B 69/36***
(96) EP 09462002.8 26.03.2009. Hu
(97) EP 2233932 29.09.2010. 201039 En
**(54) Optical system and method for determining direction, velocity and position of a ball traversing a plane**
(71) Ental Kutatási, Fejlesztési és Tanácsadó Kft., Babits Mihály utca 34, 9024 Györ, HU
(72) Bozi, István, Arany János utca 42, 2640 Szendehely, HU;
Molnárka, Gyözö, Babits Mihály utca 34, 9024 Györ, HU;
Mórocz, Tamás, Erzsébet királyné utca 30, 9300 Csorna, HU;
Nagy, Attila, Kossuth Lajos utca 75, 9025 Györ, HU;
Sütö, István, Rákóczi u. 38, 9444 Fertöszentmiklós, HU;

Varjasi, Norbert, Zöld u. 3/A, 9028 Györ, HU
(74) Harangozo, Gabor, Danubia, Patent & Law Office LLC, Bajcsy-Zsilinszky út 16, 1051 Budapest, HU

**(51) (8)** **EP 2340440** *
***G 01R 21/133***
***G 01R 22/06***
***H 02J 13/00***
(86) PCT/EP2008064669 29.10.2008.
(96) EP 08875245.6 29.10.2008. En
(87) WO2010048993 06.05.2010. 201018
(97) EP 2340440 06.07.2011. 201127 En
**(54) ELECTRICITY METER, REMOTE CONTROLLABLE DISCONNECTOR MODULE AND ELECTRICAL INSTALLATION COMPRISING THE ELECTRICITY METER**
(71) Enel Distribuzione S.p.A., Via Ombrone 2, 00198 Roma, IT
(72) VERONI, Fabio, Via Aldo Motta n.24/A, I-20059 Vimercate - Milano, IT
(74) HOFFMANN EITLE, Patent- und Rechtsanwälte, Arabellastraße 4, 81925 München, DE

**(51) (8)** **EP 2341353**
***G 01R 31/28***
(96) EP 10150156.7 05.01.2010. En
(97) EP 2341353 06.07.2011. 201127 En
**(54) Self-aligning test fixture for printed circuit board**
(71) RESEARCH IN MOTION LIMITED, 295 Phillip Street, Waterloo, Ontario N2L 3W8, CA
(72) Jiang, Hongjun, 72959 - 295 Phillip Street, Waterloo Ontario N2L 3W8, CA;
Reksnis Marek, 73323 - 295 Phillip Street, Waterloo Ontario N2L 3W8, CA;
Ivannikov, Arkady, 73689 - 295 Phillip Street, Waterloo Ontario N2L 3W8, CA
(74) MERH-IP, Matias Erny Reichl Hoffmann, Paul-Heyse-Strasse 29, 80336 München, DE

**(51) (8)** **EP 2329284** *
***G 01S 1/00***
***G 06K 19/077***
***G 01C 21/20***
(30) GB 19.08.2008. 0815142
GB 09.04.2009. 0906423
(86) PCT/GB2009002021 19.08.2009.
(96) EP 09784959.0 19.08.2009. En
(87) WO2010020774 25.02.2010. 201008
(97) EP 2329284 08.06.2011. 201123 En
**(54) BEARING INFORMATION ON A CARD**
(71) Samba Financial Group, P.O. Box 833, Riyadh 11421, SA
(72) ALOTHAIMEEN, Ahmad, Abdullah, Samba Financial Group, King Abdulaziz Road, P.O. Box 833, Riyadh 11421, SA
(74) Hale, Peter, et al, Kilburn & Strode LLP, 20 Red Lion Street, GB-London WC1R 4PJ, GB

**(51) (8)** **EP 2335107** *
***G 02B 6/38***
***H 01R 13/66***
***G 06F 1/26***
***G 06F 1/16***
(30) US 30.09.2008. 241036
(86) PCT/US2009058619 28.09.2009.
(96) EP 09793068.9 28.09.2009. En
(87) WO2010039656 08.04.2010. 201014
(97) EP 2335107 22.06.2011. 201125 En
**(54) MAGNETIC CONNECTOR WITH OPTICAL SIGNAL PATH**
(71) Apple Inc., 1 Infinite Loop, Cupertino, CA 95014, US
(72) DIFONZO, John, C., 1 Infinite Loop, MS 40-Pat, Cupertino, California 95014, US;
LIGTENBERG, Chris, 1 Infinite Loop, MS 40-Pat, Cupertino, California 95014, US;
CULBERT, Michael, 1 Infinite Loop, MS 40-Pat, Cupertino, California 95014, US
(74) Lang, Johannes, Bardehle Pagenberg, Galileiplatz 1, DE-81679 München, DE

**(51) (8)** **EP 2324387** *
***G 02B 26/08***
***G 02B 26/06***
(30) FR 14.08.2008. 0855579
(86) PCT/FR2009001000 12.08.2009.
(96) EP 09736248.7 12.08.2009. Fr
(87) WO2010018326 18.02.2010. 201007
(97) EP 2324387 25.05.2011. 201121 Fr
**(54) DEFORMABLE MIRROR WITH FORCE ACTUATORS AND DISTRIBUTED STIFFNESS**
(71) Alpao, 2217 route de Meylan, 38330 Biviers, FR
(72) CAMET, Sébastien, 51 A, rue des Aiguinards, F-38240 Meylan, FR;
CURIS, Jean-François, 6 rue Maurice Savin, F-38420 Domene, FR;
ROOMS, Frédéric, 2217 route de Meylan, F-38330 Biviers, FR
(74) Martin, Didier Roland Valéry, Cabinet Didier Martin, 50, chemin des Verrires, 69260 Charbonnires-les Bains, FR

**(51) (8)** **EP 2333609**
***G 03F 7/037***
***C 09J 7/00***
***C 09J 179/08***
***G 03F 7/004***
(30) JP 05.07.2005. 2005196328
JP 17.11.2005. 2005332955
(96) EP 11154533.1 30.06.2006. En
(97) EP 2333609 15.06.2011. 201124 En
**(54) Photosensitive adhesive composition, and obtained using the same, adhesive film, adhesive sheet, semiconductor wafer with adhesive layer, semiconductor device and electronic part**
(71) Hitachi Chemical Company, Ltd., 1-1, 2-chome, Nishishinjuku, Shinjuku-ku, Tokyo 163-0449, JP
(72) Kawamori, Takashi, Electronic Materials R&D Center Hitachi, Chemical Company, Ltd, 48 Wadai, Tsukuba-shi, Ibaraki 3004247, JP;
Masuko, Takashi, Electronic Materials R&D Center Hitachi, Chemical Company, Ltd, 48 Wadai, Tsukuba.shi, Ibaraki 3004247, JP;
Katogi, Shigeki, Electronic Materials R&D Center Hitachi, Chemical Company. Ltd, 48 Wadai. Tsukuba-shi, Ibaraki 3004247, JP;
Yasuda, Masaaki, Electronic Materials R&D Center Hitachi, Chemical Company. Ltd, 48 Wadai, Tsukuba-shi, Ibaraki 3004247, JP

(74) von Kreisler Selting Werner, Deichmannhaus am Dom, Bahnhofsvorplatz 1, 50667 Köln, DE

**(51) (8)** **EP 2115550 ***
***G 06F 1/32***
(30) US 07.01.2007. 620703
(86) PCT/US2007025848 18.12.2007.
(96) EP 07863051.4 18.12.2007. En
(87) WO2008085341 17.07.2008. 200829
(97) EP 2115550 11.11.2009. 200946 En
**(54) METHODS AND SYSTEMS FOR POWER MANAGEMENT IN A DATA PROCESSING SYSTEM**
(71) APPLE INC., 1 Infinite Loop, M/S:3-Pat, Cupertino, CA 95014, US
(72) DE CESARE, Joshua, 678 Regas Drive, Campbell, CA 95008, US;
SEMERIA, Bernard, 674 Florales Drive, Palo Alto, CA 96306, US;
SMITH, Michael, 475 E. McKinley Avenue, Sunnyvale, CA 94086, US
(74) Barton, Russell Glen, et al, Withers & Rogers LLP, Goldings House, 2 Hays Lane, London, SE1 2HW, GB

**(51) (8)** **EP 2328063**
***G 06F 3/01***
(96) EP 09177543.7 30.11.2009. En
(97) EP 2328063 01.06.2011. 201122 En
**(54) Portable electronic device and method of controlling same to provide tactile feedback**
(71) RESEARCH IN MOTION LIMITED, 295 Phillip Street, Waterloo, Ontario N2L 3W8, CA
(72) Theimer, Wolfgang, Michael, 42306 - Universitätsstraße 140, 44799, Bochum, DE
(74) MERH-IP, Matias Erny Reichl Hoffmann, Paul-Heyse-Strasse 29, 80336 München, DE

**(51) (8)** **EP 2329339 ***
***G 06F 3/01***
***G 06F 3/048***
***H 04M 1/725***
(30) US 15.07.2008. 80978 P
US 15.07.2008. 80981 P
US 15.07.2008. 80985 P
US 15.07.2008. 80987 P
US 29.01.2009. 148312 P
US 26.05.2009. 181280 P
(86) PCT/US2009050574 14.07.2009.
(96) EP 09790406.4 14.07.2009. En
(87) WO2010009152 21.01.2010. 201003
(97) EP 2329339 08.06.2011. 201123 En
**(54) SYSTEMS AND METHODS FOR SHIFTING HAPTIC FEEDBACK FUNCTION BETWEEN PASSIVE AND ACTIVE MODES**
(71) Immersion Corporation, 801 Fox Lane, San Jose, CA 95131, US
(72) BIRNBAUM, David, 311 Oak Street, 327, Oakland, CA 94607, US;
ULLRICH, Christopher, J., 227 Palomares Avenue, Ventura, CA 93003, US
(74) Phillips & Leigh, 5 Pemberton Row, London EC4A 3BA, GB

**(51) (8)** **EP 2342615 ***
***G 06F 3/01***
***G 06F 3/041***
(30) US 24.09.2008. 237334
(86) PCT/US2009057808 22.09.2009.
(96) EP 09792834.5 22.09.2009. En
(87) WO2010036641 01.04.2010. 201013
(97) EP 2342615 13.07.2011. 201128 En
**(54) MULTIPLE ACTUATION HANDHELD DEVICE**
(71) Immersion Corporation, 801 Fox Lane, San Jose, CA 95131, US
(72) GRANT, Danny, A., 1784 DeLunebourg, Laval, Québec H7M 2A1, CA;
HEUBEL, Robert, W., 652 Begier Avenue, San Leandro, California 94577, US
(74) Phillips & Leigh, 5 Pemberton Row, London EC4A 3BA, GB

**(51) (8)** **EP 2328065**
***G 06F 3/041***
***G 06F 3/01***
***G 06F 3/048***
(96) EP 09177523.9 30.11.2009. En
(97) EP 2328065 01.06.2011. 201122 En
**(54) Electronic device and method of controlling same**
(71) RESEARCH IN MOTION LIMITED, 295 Phillip Street, Waterloo, Ontario N2L 3W8, CA
(72) Faubert, Perry, Allan, 305 Edgewater Crescent, Kitchener Ontario N2A 4M1, CA
(74) Reichl, Wolfgang, MERH-IP, Matias Erny Reichl Hoffmann, Paul-Heyse-Straße 29, 80336 München, DE

**(51) (8)** **EP 2328068**
***G 06F 3/048***
(96) EP 09177536.1 30.11.2009. En
(97) EP 2328068 01.06.2011. 201122 En
**(54) Portable electronic device and method of controlling same**
(71) RESEARCH IN MOTION LIMITED, 295 Phillip Street, Waterloo, Ontario N2L 3W8, CA
(72) Griffin, Jason, Tyler, 72251 - 305 Phillip Street, Waterloo Ontario N2L 3W8, CA
(74) MERH-IP, Matias Erny Reichl Hoffmann, Paul-Heyse-Strasse 29, 80336 München, DE

**(51) (8)** **EP 2062140 ***
***G 06F 11/30***
(30) US 09.04.2007. 922637 P
(86) PCT/US2008004643 07.04.2008.
(96) EP 08747879.8 07.04.2008. En
(87) WO2008124185 16.10.2008. 200842
(97) EP 2062140 27.05.2009. 200922 En
**(54) SYSTEM AND METHOD FOR MONITORING AND MANAGING ENERGY PERFORMANCE**
(71) Live Data Systems, Inc., 31 Tannery Road, Branchburg, NJ 08876, US
(72) BRZEZOWSKI, Edward, H., 487 Route 24, Chester, NJ 07930, US;
GRABOWSKI, Joseph, G., 31 Tannery Road, Branchburg, NJ 08876, US
(74) Schäflein, Christian Georg, Maiwald Patentanwalts GmbH, Elisenstraße 3, 80335 München, DE

**(51) (8)** **EP 2115627** *
***G 06F 17/00***
***G 06F 3/00***
***G 06F 13/00***
***G 06F 9/00***
(30) US 07.01.2007. 650729
US 07.01.2007. 650624
US 07.01.2007. 650728
US 07.01.2007. 650730
US 07.01.2007. 650726
US 07.01.2007. 650721
(86) PCT/US2008000087 04.01.2008.
(96) EP 08712962.3 04.01.2008. En
(87) WO2008085869 17.07.2008. 200829
(97) EP 2115627 11.11.2009. 200946 En
**(54) SYNCHRONIZATION METHODS AND SYSTEMS**
(71) APPLE INC., 1 Infinite Loop, Cupertino, CA 95014, US
(72) FREEDMAN, Gordon, J., 2154 Staunton Court, Palo Alto, CA 94306, US;
FARKAS, Jacob, 169 Charles Avenue, Sunnyvale, CA 94086, US
(74) Barton, Russell Glen, et al, Withers & Rogers LLP, Goldings House, 2 Hays Lane, London, SE1 2HW, GB

**(51) (8)** **EP 2342663** *
***G 06F 17/30***
(30) SE 24.10.2008. 0802277
(86) PCT/EP2009063796 21.10.2009.
(96) EP 09740675.5 21.10.2009. En
(87) WO2010046393 29.04.2010. 201017
(97) EP 2342663 13.07.2011. 201128 En
**(54) DISTRIBUTED DATA STORAGE**
(71) ILT Productions AB, Box 177, 371 22 Karlskrona, SE
(72) MELANDER, Christian, Selenvägen 3, S-SE-370 30 Rödeby, SE;
BERNBO, Stefan, Arklimästaregatan 46, S-SE-371 36 Karlskrona, SE;
PETERSSON, Gustav, Östra Köpmansgatan 29, S-SE-371 32 Karlskrona, SE;
PERSSON, Roger, Nyhemsvägen 1 C, S-SE-371 43 Karlskrona, SE
(74) Hjalmarsson, Magnus Axel, Awapatent AB, P.O. Box 99, 351 04 Växjö, SE

**(51) (8)** **EP 2254068**
***G 06F 19/00***
(96) EP 09006665.5 18.05.2009. En
(97) EP 2254068 24.11.2010. 201047 En
**(54) Method and system providing improved data matching for virtual planning**
(71) Nobel Biocare Services AG, Postfach, 8058 Zürich-Flughafen, CH
(72) Pettersson, Andreas, Lemansgatan 6, 412 60 Göteborg, SE;
Nilsson, Urban, Veneröd 570, 442 95 Hålta, SE
(74) Byström, Kurt Linus, Nobel Biocare AB, Box 5190, 402 26 Göteborg, SE

**(51) (8)** **EP 2332082** *
***G 06F 19/00***
(30) US 23.07.2008. 82912 P
(86) PCT/US2009051441 22.07.2009.
(96) EP 09790738.0 22.07.2009. En
(87) WO2010011776 28.01.2010. 201004
(97) EP 2332082 15.06.2011. 201124 En
**(54) METHOD OF CHARACTERIZING SEQUENCES FROM GENETIC MATERIAL SAMPLES**
(71) Translational Genomics Research Institute, 445 N. Fifth Street, Phoenix, AZ 85004, US;
The Regents Of The University Of California, 1111 Franklin Street, Oakland, CA 94607-5200, US
(72) CRAIG, David, 2820 S. Camellia Drive, Chandler, AZ 85248, US;
HOMER, Nils, 10507 National Blvd. Apt. 3, Los Angeles, CA 90034, US
(74) Ilgart, Jean-Christophe, et al, BREVALEX, 95 rue d'Amsterdam, 75378 Paris Cedex 8, FR

**(51) (8)** **EP 2284750**
***G 06F 21/00***
(30) US 10.07.2009. 500630
(96) EP 10168401.7 05.07.2010. En
(97) EP 2284750 16.02.2011. 201107 En
**(54) System and method for detecting obfuscated malware using code normalization**
(71) Kaspersky Lab, ZAO, 10 Geroyev Panfilovtsev Street, Moscow 125363, RU
(72) Golovkin, Maxim Y., c/o KASPERSKY LAB ZAO, 10/1 1st Volokolamsky Proezd, 123060, Moscow, RU
(74) Sloboshanin, Sergej, et al, V. Füner, Ebbinghaus, Finck, Hano, Mariahilfplatz 3, 81541 München, DE

**(51) (8)** **EP 2309408**
***G 06F 21/00***
(30) RU 01.10.2009. 2009136234
US 06.12.2009. 631830
(96) EP 10176518.8 14.09.2010. En
(97) EP 2309408 13.04.2011. 201115 En
**(54) Method and system for detection and prediction of computer virus-related epidemics**
(71) Kaspersky Lab, ZAO, 10 Geroyev Panfilovtsev Street, Moscow 125363, RU
(72) Mashevsky, Yuri V., c/o KASPERSKY LAB ZAO, 10/1 1st Volokolamsky Proezd, 123060, Moscow, RU;
Namestnikov, Yuri V., c/o KASPERSKY LAB ZAO, 10/1 1st Volokolamsky Proezd, 123060, Moscow, RU;
Denishchenko, Nikolay V., c/o KASPERSKY LAB ZAO, 10/1 1st Volokolamsky Proezd, 123060, Moscow, RU;
Zelensky, Pavel, c/o KASPERSKY LAB ZAO, 10/1 1st Volokolamsky Proezd, 123060, Moscow, RU
(74) Sloboshanin, Sergej, et al, V. Füner, Ebbinghaus, Finck, Hano, Mariahilfplatz 3, 81541 München, DE

**(51) (8)** **EP 2339507**
***G 06K 9/00***
(96) EP 09180783.4 28.12.2009. En
(97) EP 2339507 29.06.2011. 201126 En
**(54) Head detection and localisation method**
(71) Softkinetic, Av. L. Mommaerts 24, 1140 Evere, BE
(72) Baele, Xavier, rue de la Rive 70/5, 1200 Bruxelles, BE;
Thollot, Julien, J.B. De Keyzerstraat 24, 1970 Wezembeek-Oppem, BE;
Martinez Gonzalez, Javier, Boulevard Général Jacques 203, 1050 Bruxelles, BE;
Simons, Kevin, place Meiser 11, 1040 Bruxelles, BE

(74) Luys, Marie-José A.H., et al, Gevers, Intellectual Property House, Holidaystraat 5, 1831 Diegem, BE

**(51) (8)** **EP 2082358 ***
***G 06K 15/12***
(30) US 04.10.2006. 543449
(86) PCT/US2007021490 04.10.2007.
(96) EP 07839346.9 04.10.2007. En
(87) WO2008042448 10.04.2008. 200815
(97) EP 2082358 29.07.2009. 200931 En
**(54) HOLLOW DOT PRINTING APPARATUS AND METHODS**
(71) Colorep, Inc., 9119 S. Milliken Avenue, Rancho Cucamonga, CA 91730, US
(72) GRIER, William, 7277 Leedom Drive, Highland, CA 92346, US
(74) Dr. Graf & Partner AG, Intellectual Property, Herrenacker 15, Postfach 518, 8201 Schaffhausen, CH

**(51) (8)** **EP 2324449 ***
***G 06Q 30/00***
(30) US 30.07.2008. 182529
(86) PCT/DK2009050192 30.07.2009.
(96) EP 09776253.8 30.07.2009. En
(87) WO2010012282 04.02.2010. 201005
(97) EP 2324449 25.05.2011. 201121 En
**(54) A SYSTEM FOR TARGETED ADVERTISING**
(71) EOVENDO ApS, Sødalsparken 18, 8220 Brabrand, DK
(72) IBENFORTH, Nicolas Waldorff Hyltoft, Rosenvænget 1, DK-3000 Helsingør, DK;
ØSTERGAARD, Martin, Liljevej 16, DK-9440 Aabybro, DK
(74) Plougmann & Vingtoft A/S, Sundkrogsgade 9, P.O. Box 831, 2100 CopenhagenØ, DK

**(51) (8)** **EP 2333715**
***G 06Q 50/00***
***G 06K 17/00***
(30) JP 28.08.2008. 2008219033
(86) PCT/JP2009004220 28.08.2009.
(96) EP 09809599.5 28.08.2009. Ja
(87) WO2010023944 04.03.2010. 201009
(97) EP 2333715 15.06.2011. 201124 En
**(54) DISPLAY SUPPORT SYSTEM**
(71) Japan Tobacco, Inc., 2-1, Toranomon 2-chome, Minato-ku, Tokyo 105-8422, JP
(72) OIKAWA, Ayumu, c/o Japan Tobacco Inc., 2-1 Toranomon 2-chome, Minato-ku, Tokyo 105-8422, JP
(74) HOFFMANN EITLE, Patent- und Rechtsanwälte, Arabellastraße 4, 81925 München, DE

**(51) (8)** **EP 2204781**
***G 07F 1/04***
(30) DE 06.01.2009. 202009000228 U
(96) EP 10000025.6 05.01.2010. De
(97) EP 2204781 07.07.2010. 201027 De
**(54) Guiding device**
(71) Novomatic AG, Wiener Strasse 158, 2352 Gumpoldskirchen, AT
(72) Mührenberg, Roland, c/o IP&Rechtsabteilung, Wiener Strasse 158, 2352 Gumpoldskirchen, AT;
Buchholz, Wiebke, c/o IP &Rechtsabteilung, Wiener Strasse 158, 2352 Gumpoldskirchen, AT;
Zander, Marko, c/o IP &Rechtsabteilung, Wiener Strasse 158, 2352 Gumpoldskirchen, AT

**(51) (8)** **EP 2329480 ***
***G 09B 23/28***
***G 08B 6/00***
***G 06G 7/60***
***G 06G 7/48***
(30) US 12.08.2008. 88249 P
(86) PCT/US2009053105 07.08.2009.
(96) EP 09791271.1 07.08.2009. En
(87) WO2010019464 18.02.2010. 201007
(97) EP 2329480 08.06.2011. 201123 En
**(54) SURGICAL BURR HOLE DRILLING SIMULATOR**
(71) SimQuest LLC, 1010 Wayne Avenue, Suite 940, Silver Spring, MD 20910, US
(72) MEGLAN, Dwight, 90 Wildwood Drive, Westwood, MA 02090, US
(74) Freeman, Avi, Beck Greener, Fulwood House, 12 Fulwood Place, London, WC1V 6HR, GB

**(51) (8)** **EP 2324470 ***
***G 09F 3/00***
(30) IT 10.09.2008. PI20080092
(86) PCT/IB2009006774 07.09.2009.
(96) EP 09786227.0 07.09.2009. En
(87) WO2010029402 18.03.2010. 201011
(97) EP 2324470 25.05.2011. 201121 En
**(54) BOTTLE SHIELDS**
(71) Acone, Onofrio, Via D. Cirillo 13/B, 84081 Baronissi (SA), IT;
Acone, Davide, Via D. Cirillo 13, 84081 Baronissi (SA), IT
(72) Acone, Onofrio, Via D. Cirillo 13/B, 84081 Baronissi (SA), IT;
Acone, Davide, Via D. Cirillo 13, 84081 Baronissi (SA), IT

**(51) (8)** **EP 2332138 ***
***G 09G 3/32***
(30) EP 01.09.2008. 08163445
(86) PCT/EP2009061121 28.08.2009.
(96) EP 09782320.7 28.08.2009. En
(87) WO2010023270 04.03.2010. 201009
(97) EP 2332138 15.06.2011. 201124 En
**(54) METHOD AND SYSTEM FOR COMPENSATING AGEING EFFECTS IN LIGHT EMITTING DIODE DISPLAY DEVICES**
(71) Barco NV, President Kennedypark 35, 8500 Kortrijk, BE
(72) BERT, Tom, Hendrikslaar 14, B-9080 Lochristi, BE;
KIMPE, Tom, Koningin Fabiolalaan 87, B-9000 Gent, BE
(74) Bird Goën & Co, Klein Dalenstraat 42A, 3020 Winksele, BE

**(51) (8)** **EP 2341528**
***H 01L 21/329***
***H 01L 29/06***
***H 01L 29/32***
***H 01L 29/861***
(96) EP 10150107.0 05.01.2010. En
(97) EP 2341528 06.07.2011. 201127 En
**(54) Power Semiconductor Device and its manufacturing method**
(71) ABB Technology AG, Affolternstrasse 44, 8050 Zürich, CH

(72) Matthias, Sven, Othmarsingerstrasse 37, CH-5600, Lenzburg, CH;
Kopta Arnost, Rütihofstrasse 10, CH-8049 Zürich, CH;
Munaf Rahimo, Bachweg 10, CH-5619 Uezwil, CH
(74) ABB Patent Attorneys, C/o ABB Schweiz AG, Intellectual Property (CH-LC/IP), Brown Boveri Strasse 6, 5400 Baden, CH

**(51) (7)** **EP 1577939**
H 01L 21/768
(30) EP 18.03.2004. 04101107
(96) EP 05003843.9 23.02.2005. En
(97) EP 1577939 21.09.2005. 200538 En
**(54) Method of manufacturing a semiconductor device having damascene structures with air gaps**
(71) IMEC, Kapeldreef 75, 3001 Leuven, BE;
NXP B.V., High Tech Campus 60, 5656 AG Eindhoven, NL
(72) Daamen, Roel, Akerstraat 25, 6061 NE Posterholt, NL;
Verheijden, Greja Johanna Adriana Maria, Hyacintlaan 6, 5551 AT Valkenswaard, NL
(74) Bird, Ariane, et al, Bird Goën & Co, Klein Dalenstraat 42A, 3020 Winksele, BE

**(51) (7)** **EP 1577940**
H 01L 21/768
(30) EP 17.03.2004. 04101097
(96) EP 05003844.7 23.02.2005. En
(97) EP 1577940 21.09.2005. 200538 En
**(54) Method of manufacturing a semiconductor device having damascene structures with air gaps**
(71) IMEC, Kapeldreef 75, 3001 Leuven, BE;
NXP B.V., High Tech Campus 60, 5656 AG Eindhoven, NL
(72) Daamen, Roel, Akerstraat 25, 6061 NE Posterholt, NL;
Hoang, Viet Nguyen, Van Hasseltlaan 388, 2625 JB Delft, NL
(74) Bird, Ariane, et al, Bird Goën & Co, Klein Dalenstraat 42A, 3020 Winksele, BE

**(51) (8)** **EP 2118937** *
***H 01L 31/052***
***H 01L 31/0352***
(30) US 30.01.2007. 898454 P
US 05.06.2007. 810283
(86) PCT/US2008001226 30.01.2008.
(96) EP 08779557.1 30.01.2008. En
(87) WO2008121176 09.10.2008. 200841
(97) EP 2118937 18.11.2009. 200947 En
**(54) A PHOTOVOLTAIC APPARATUS HAVING AN ELONGATED PHOTOVOLTAIC DEVICE USING AN INVOLUTE-BASED CONCENTRATOR**
(71) Solyndra LLC, 47488 Kato Road, Fremont CA 94538, US
(72) BREZOCZKY, Thomas, 47700 Kato Road, Fremont, CA 94538, US;
GRONET, Chris, M., 47700 Kato Road, Fremont, CA 94538, US;
BULLER, Benyamin, 8733 N. Stone Mill Road, Sylvania, OH 43560-9833, US
(74) Jones Day, Rechtsanwälte, Attorneys-at-Law, Patentanwälte, Prinzregentenstrasse 11, 80538 München, DE

**(51) (8)** **EP 2329563** *
***H 01Q 7/06***
***H 01Q 1/22***
***G 06K 19/077***
(30) SK 29.08.2008. 582008
SK 12.03.2009. 500142009
(86) PCT/IB2009053513 10.08.2009.
(96) EP 09786881.4 10.08.2009. En
(87) WO2010023574 04.03.2010. 201009
(97) EP 2329563 08.06.2011. 201123 En
**(54) REMOVABLE CARD FOR A CONTACTLESS COMMUNICATION, ITS UTILIZATION AND THE METHOD OF PRODUCTION**
(71) Logomotion, s.r.o., Winterova 15, 921 01 Piestany, SK
(72) FLOREK, Miroslav, ING. Miroslav Florek, Sedmokráskova 4, 821 01 Bratislava, SK;
MASARYK, Michal, ING. Michal Masaryk PhD., Medzilaborecká 7, 821 01 Bratislava, SK
(74) Porubcan, Robert, Puskinova 19, 900 28 Ivanka pri Dunaji, SK

**(51) (8)** **EP 2339695**
***H 01R 11/01***
***C 09J 9/02***
***C 09J 11/08***
***C 09J 201/00***
***H 01B 1/22***
***H 05K 1/14***
***H 05K 3/36***
(30) JP 25.08.2006. 2006229086
JP 21.11.2006. 2006314652
JP 18.06.2007. 2007160577
(96) EP 10197088.7 06.08.2007. En
(97) EP 2339695 29.06.2011. 201126 En
**(54) Circuit connecting material, connection structure for circuit member using the same and production method thereof**
(71) Hitachi Chemical Company, Ltd., 1-1 Nishi-Shinjuku 2-chome, Shinjuku-ku, Tokyo 163-0449, JP
(72) Tatsuzawa, Takashi, c/o Hitachi Chemical Company Ltd., 1150, Goshomiya, Chikusei-shi, Ibaraki 308-8524, JP;
Kobayashi, Kouji, c/o Hitachi Chemical Company Ltd., 1150, Goshomiya, Chikusei-shi, Ibaraki 308-8524, JP;
Fukushima, Naoki, c/o Hitachi Chemical Company Ltd., 1150, Goshomiya, Chikusei-shi, Ibaraki 308-8524, JP;
Kobayashi, Takanobu, c/o Hitachi Chemical Company Ltd., 1150, Goshomiya, Chikusei-shi, Ibaraki 308-8524, JP;
Ito, Akihiro, c/o Hitachi Chemical Company Ltd., 1150, Goshomiya, Chikusei-shi, Ibaraki 308-8524, JP
(74) von Kreisler Selting Werner, Deichmannhaus am Dom, Bahnhofsvorplatz 1, 50667 Köln, DE

**(51) (8)** **EP 2332218** *
***H 01R 13/631***
***H 01R 13/633***
(30) DE 30.08.2008. 102008045191
(86) PCT/EP2009006026 20.08.2009.
(96) EP 09777989.6 20.08.2009. De
(87) WO2010022887 04.03.2010. 201009
(97) EP 2332218 15.06.2011. 201124 De
**(54) MAINS PLUG**
(71) Schulte Elektrotechnik GmbH & Co. Kg, Jüngerstrasse 21, 58515 Lüdenscheid, DE

(72) AULMANN, Manfred, Bussardweg 6, 58579 Schalksmühle, DE
(74) Dörner, Kötter & Kollegen, Körnerstrasse 27, 58095 Hagen, DE

**(51) (8)** **EP 2339703**
***H 01R 39/64***
(96) EP 09180645.5 23.12.2009. En
(97) EP 2339703 29.06.2011. 201126 En
**(54) Test point adaptor for coaxial cable connections**
(71) John Mezzalingua Associates, Inc., 6176 East Molloy Rd., East Syracuse, NY 13057-0278, US
(72) Eriksen, Kim Lundgren, Østervej 2, 4760, Vordingborg, DK
(74) Jensen, Peter Kim, et al, C/o Chas. Hude A/S, H.C. Andersens Boulevard 33, 1780 Copenhagen V, DK

**(51) (8)** **EP 2342791 ***
***H 02H 7/18***
***H 02J 7/04***
***H 01M 10/44***
***G 01K 13/00***
(30) US 02.10.2008. 102323 P
(86) PCT/US2009059447 02.10.2009.
(96) EP 09818596.0 02.10.2009. En
(87) WO2010040106 08.04.2010. 201014
(97) EP 2342791 13.07.2011. 201128 En
**(54) ELECTRONIC CURRENT INTERRUPT DEVICE FOR BATTERY**
(71) Leyden Energy, Inc., 46840 Lakeview Boulevard, Fremont, CA 94538, US
(72) PATEL, Aakar, 7277 Huntswood Court, Pleasanton, California 94566, US;
JUZKOW, Marc, 782 Vinci Way, Livermore, California 94550, US
(74) UEXKÜLL & STOLBERG, Patentanwälte, Beselerstraße 4, DE-22607 Hamburg, DE

**(51) (8)** **EP 2332232 ***
***H 02K 1/16***
***H 02K 1/18***
***H 02K 1/20***
(30) FR 03.09.2008. 0855896
(86) PCT/EP2009061216 31.08.2009.
(96) EP 09811110.7 31.08.2009. Fr
(87) WO2010026126 11.03.2010. 201010
(97) EP 2332232 15.06.2011. 201124 Fr
**(54) STATOR FOR ROTARY ELECTRIC MACHINE AND METHOD FOR MAKING SAME**
(71) Société de Technologie MICHELIN, 23, rue Breschet, 63000 Clermont-Ferrand, FR;
MICHELIN Recherche et Technique S.A., Route Louis Braille 10, 1763 Granges-Paccot, CH
(72) VEDY, Bertrand, Chemin du Gregnolet 71, CH-1814 La Tour de Peilz, CH
(74) Lasson, Cédric Y. M., Manufacture Française des Pneumatiques MICHELIN, 23, Place des Carmes-Déchaux, SGD/LG/PI - F35 - Ladoux, 63040 CLERMONT-FERRAND Cedex 9, FR

**(51) (8)** **EP 2340600 ***
***H 02K 21/46***
***H 02K 1/27***
(30) SE 23.10.2008. 0850051
(86) PCT/SE2009051206 22.10.2009.
(96) EP 09822281.3 22.10.2009. En
(87) WO2010047657 29.04.2010. 201017
(97) EP 2340600 06.07.2011. 201127 En
**(54) A MIXER ASSEMBLY**
(71) ITT Manufacturing Enterprises, Inc., 1105 North Market Street, Wilmington, DE 19801, US
(72) WAND, Katrin, Im Pferrich 3, 79677 Schönenberg/schwarz, DE;
MÖKANDER, Jürgen, Kavallerivägen 16, S-191 78 Sollentuna, SE;
LINDEBORG, Rolf, Hanna Nilssons Väg 6, S-176 68 Järfälla, SE;
ENGSTRÖM, Jörgen, Gråsiskevägen 2, S-147 71 Grödinge, SE;
HEDBERG, Tanja, Tomtebodagatan 10, S-113 39 Stockholm, SE;
BARTHOLF, Thomas, Fasanvägen 27, SE-131 44 Nacka, SE
(74) Holmberg, Nils Anders Patrik, BRANN AB, P.O. Box 171 92, 104 62 Stockholm, SE

**(51) (8)** **EP 2329599 ***
***H 03L 7/18***
***G 01R 25/00***
(30) US 27.08.2008. 92257 P
(86) PCT/US2009002691 01.05.2009.
(96) EP 09788764.0 01.05.2009. En
(87) WO2010024835 04.03.2010. 201009
(97) EP 2329599 08.06.2011. 201123 En
**(54) SYSTEM AND METHOD FOR PRECISION PHASE SHIFT MEASUREMENT**
(71) Aerodyne Research, Inc., 45 Manning Road, Billerica, MA 01821-3976, US
(72) KEBABIAN, Paul, L., 410 Central Street, Acton, MA 01720, US
(74) Rupprecht, Kay, et al, Meissner, Bolte & Partner GbR, Widenmayerstraße 48, 80538 München, DE

**(51) (8)** **EP 2327182 ***
***H 04L 5/00***
(30) US 25.08.2008. 91621 P
US 14.10.2008. 196068 P
(86) PCT/US2009054915 25.08.2009.
(96) EP 09791896.5 25.08.2009. En
(87) WO2010027800 11.03.2010. 201010
(97) EP 2327182 01.06.2011. 201122 En
**(54) IDENTIFICATION OF PACKET TRAFFIC TRANSMITTED BY VARIOUS DEVICES OPERATED IN MULTIPLE OVERLAPPED FREQUENCY BANDS IN PACKET-BASED OFDM SYSTEMS**
(71) Aware, Inc., 40 Middlesex Turnpike, Bedford, MA 01730-1432, US
(72) KIM, Joon, Bae, 14 Pine Knoll Road, Lexington, MA 02420, US
(74) Gesthuysen, von Rohr & Eggert, Patentanwälte, Huyssenallee 100, 45128 Essen, DE

**(51) (8)** **EP 2342868** *
***H 04L 12/28***
***H 04L 12/46***
(30) IN 29.08.2008. DE20462008
(86) PCT/IN2009000475 31.08.2009.
(96) EP 09748493.5 31.08.2009. En
(87) WO2010035280 01.04.2010. 201013
(97) EP 2342868 13.07.2011. 201128 En
**(54) INTEGRATING PLURALITY OF BUILDING MANAGEMENT SERVICES AND HOME AUTOMATION SERVICES WITH PLURALITY OF MULTI-PLAY SERVICES ON NEUTRAL ACCESS NETWORK OPERATION BASIS**
(71) Hari, Shanker Singh, C-96, Sector 33, Noida-201301, UP, IN
(72) Hari, Shanker Singh, C-96, Sector 33, Noida-201301, UP, IN
(74) Plougmann & Vingtoft A/S, Sundkrogsgade 9, P.O. Box 831, 2100 CopenhagenØ, DK

**(51) (8)** **EP 2327201** *
***H 04M 1/725***
***G 06F 3/01***
***G 06F 3/048***
(30) US 15.07.2008. 80978 P
US 15.07.2008. 80981 P
US 15.07.2008. 80985 P
US 15.07.2008. 80987 P
US 29.01.2009. 148312 P
US 26.05.2009. 181280 P
(86) PCT/US2009050569 14.07.2009.
(96) EP 09790404.9 14.07.2009. En
(87) WO2010009149 21.01.2010. 201003
(97) EP 2327201 01.06.2011. 201122 En
**(54) SYSTEMS AND METHODS FOR TRANSMITTING HAPTIC MESSAGES**
(71) Immersion Corporation, 801 Fox Lane, San Jose, CA 95131, US
(72) BIRNBAUM, David, 311 Oak Street, 327, Oakland, California 94607, US;
ULLRICH, Christopher, J., 227 Palomares Avenue, Ventura, California 93003, US;
RUBIN, Peter, 2901 Garber Street, Berkeley, California 94705, US;
NGO, Phong, David, 68 Rosenkranz Street, San Francisco, California, US;
KOPELOW, Leo, 630 Moultrie Street, San Francisco, California 94110, US
(74) Phillips & Leigh, 5 Pemberton Row, London EC4A 3BA, GB

**(51) (8)** **EP 2329636** *
***H 04M 1/725***
***G 06F 3/01***
***G 06F 3/048***
(30) US 15.07.2008. 80981 P
US 15.07.2008. 80987 P
US 15.07.2008. 80985 P
US 15.07.2008. 80978 P
US 29.01.2009. 148312 P
US 26.05.2009. 181280 P
(86) PCT/US2009050587 14.07.2009.
(96) EP 09790414.8 14.07.2009. En
(87) WO2010009163 21.01.2010. 201003
(97) EP 2329636 08.06.2011. 201123 En
**(54) SYSTEMS AND METHODS FOR HAPTIC MESSAGE TRANSMISSION**
(71) Immersion Corporation, 801 Fox Lane, San Jose, CA 95131, US
(72) BIRNBAUM, David, 311 Oak Street, 327, Oakland, CA 94607, US;
ULLRICH, Christopher, J., 227 Palomares Avenue, Ventura, CA 93003, US
(74) Phillips & Leigh, 5 Pemberton Row, London EC4A 3BA, GB

**(51) (8)** **EP 2329637** *
***H 04M 1/725***
***G 06F 3/01***
***G 06F 3/048***
(30) US 15.07.2008. 80978 P
US 15.07.2008. 80981 P
US 15.07.2008. 80985 P
US 15.07.2008. 80987 P
US 29.01.2009. 148312 P
US 26.05.2009. 181280 P
(86) PCT/US2009050564 14.07.2009.
(96) EP 09790403.1 14.07.2009. En
(87) WO2010009145 21.01.2010. 201003
(97) EP 2329637 08.06.2011. 201123 En
**(54) SYSTEMS AND METHODS FOR MAPPING MESSAGE CONTENTS TO VIRTUAL PHYSICAL PROPERTIES FOR VIBROTACTILE MESSAGING**
(71) Immersion Corporation, 801 Fox Lane, San Jose, CA 95131, US
(72) BIRNBAUM, David, 311 Oak Street 327, Oakland, CA 94607, US;
ULLRICH, Christopher, J., 227 Palomares Avenue, Ventura, CA 93003, US;
GRANT, Danny, 1784 Delunebourg, Laval, H7M 2A1, CA
(74) Phillips & Leigh, 5 Pemberton Row, London EC4A 3BA, GB

**(51) (8)** **EP 2330837**
***H 04W 4/16***
***H 04W 52/02***
(96) EP 09178126.0 04.12.2009. En
(97) EP 2330837 08.06.2011. 201123 En
**(54) System, method and device for maintaining a communication session suspended for servicing of power supply**
(71) RESEARCH IN MOTION LIMITED, 295 Phillip Street, Waterloo, Ontario N2L 3W8, CA
(72) Yach, David, Paul, 305 Phillip Street, Waterloo Ontario N2L 3W8, CA;
Gisby, Douglas, 2550 W. Golf Road (East Tower), extension: 66126, Rolling Meadows, IL 60008, US
(74) MERH-IP, Matias Erny Reichl Hoffmann, Paul-Heyse-Strasse 29, 80336 München, DE

**(51) (8)** **EP 2343957**
***H 05K 3/32***
***H 05K 3/40***
(96) EP 10150068.4 04.01.2010. En
(97) EP 2343957 13.07.2011. 201128 En
**(54) Electrical interconnect**

(71) RESEARCH IN MOTION LIMITED, 295 Phillip Street, Waterloo, Ontario N2L 3W8, CA
(72) Edeler, Wolfgang, Universitätsstrasse 140, Extension: 42265, 44799 Bochum, DE;
Thrien, Markus, Universitätsstrasse 140, Extension: 42336, 44799 Bochum, DE
(74) MERH-IP, Matias Erny Reichl Hoffmann, Paul-Heyse-Strasse 29, 80336 München, DE

**(51)** [(8)] **EP 2335462** *
***H 05K 7/20***
***H 02B 1/56***

(30) DE 08.10.2008. 102008050778
(86) PCT/EP2009006433 04.09.2009.
(96) EP 09778338.5 04.09.2009. De
(87) WO2010040432 15.04.2010. 201015
(97) EP 2335462 22.06.2011. 201125 De
**(54) COOLER ARRANGEMENT FOR AN ELECTRICAL OR EQUIPMENT CABINET HAVING AIR-TO-AIR HEAT EXCHANGER CASSETTES**
(71) ADC GmbH, Beeskowdamm 3-11, 14167 Berlin, DE
(72) BIRKENSTOCK, Oliver, Bolivarallee 12a, 14050 Berlin, DE

## ИНДЕКС ОБЈАВЉЕНИХ ЗАХТЕВА ЗА ПРОШИРЕЊЕ ЕВРОПСКИХ ПРИЈАВА ПАТЕНАТА ПРЕМА БРОЈУ ОБЈАВЕ ЕВРОПСКЕ ПРИЈАВЕ ПАТЕНТА

| Broj objave evropske prijave patenta | (51) |
|---|---|
| EP 1541092 | A 61C 5/12 |
| EP 1577939 | ***H 01L 21/768*** |
| EP 1577940 | H 01L 21/768 |
| EP 1826330 | ***E 04B 2/70*** |
| | ***B 28B 19/00*** |
| EP 1959068 | ***E 04B 7/02*** |
| | ***E 04B 7/14*** |
| | ***E 04D 11/00*** |
| EP 1965638* | ***A 01N 25/28*** |
| | ***A 01N 25/04*** |
| | ***A 01N 51/00*** |
| | ***A 01P 7/04*** |
| EP 1980244 | ***A 61K 9/14*** |
| | ***A 61K 9/26*** |
| WO 2010043682 | ***C 07H 7/04*** |
| | ***C 07H 13/04*** |
| | ***C 07C 1/00*** |
| EP 2033641 | ***A 61K 31/353*** |
| | ***A 61P 39/00*** |
| EP 2058317 | ***C 07F 9/09*** |
| | ***A 61K 31/661*** |
| | ***A 61P 1/04*** |
| | ***A 61P 1/16*** |
| | ***A 61P 3/10*** |
| | ***A 61P 7/02*** |
| | ***A 61P 9/04*** |
| | ***A 61P 9/10*** |
| | ***A 61P 11/00*** |
| | ***A 61P 11/02*** |
| | ***A 61P 11/06*** |
| | ***A 61P 13/12*** |
| | ***A 61P 17/00*** |
| | ***A 61P 17/02*** |
| | ***A 61P 21/04*** |
| | ***A 61P 25/00*** |
| | ***A 61P 27/14*** |
| | ***A 61P 29/00*** |
| | ***A 61P 31/04*** |
| | ***A 61P 35/00*** |
| | ***A 61P 37/02*** |
| EP 2059253* | ***A 61K 38/20*** |
| EP 2061474* | ***A 61K 31/69*** |
| | ***A 61K 31/505*** |
| | ***A 61K 31/44*** |
| | ***C 07F 5/02*** |
| EP 2062140* | ***G 06F 11/30*** |
| EP 2063730* | ***A 43B 7/22*** |
| | ***A 43B 17/02*** |
| EP 2064535* | ***G 01N 23/04*** |
| | ***G 01N 23/10*** |
| EP 2066266* | ***A 61F 2/38*** |
| EP 2068869* | ***A 61K 31/41*** |
| | ***C 07D 257/04*** |
| EP 2069284* | ***C 07C 211/00*** |
| | ***C 07D 413/04*** |
| | ***C 07D 413/14*** |

| Broj objave evropske prijave patenta | (51) |
|---|---|
| EP 2069346* | ***C 07D 471/18*** |
| | ***A 61K 31/439*** |
| | ***A 61P 25/00*** |
| EP 2069354* | ***C 07D 491/048*** |
| | ***A 61K 31/4355*** |
| | ***A 61K 31/5025*** |
| | ***A 61K 31/519*** |
| | ***A 61P 35/00*** |
| | ***A 61P 29/00*** |
| EP 2071185 | ***F 04B 15/04*** |
| | ***F 04B 1/00*** |
| EP 2076279* | ***A 61K 38/39*** |
| | ***C 07K 14/78*** |
| | ***A 61K 35/12*** |
| | ***C 12N 5/06*** |
| | ***A 61P 17/02*** |
| EP 2081553* | ***A 61K 9/19*** |
| | ***A 61K 47/02*** |
| | ***A 61K 47/26*** |
| | ***A 61K 9/00*** |
| | ***A 61K 39/395*** |
| EP 2081937* | ***C 07D 487/04*** |
| | ***A 61K 31/5025*** |
| | ***A 61K 31/53*** |
| | ***A 61P 35/00*** |
| | ***C 07D 519/00*** |
| EP 2082358* | ***G 06K 15/12*** |
| EP 2082895 | ***B 42D 15/02*** |
| EP 2084249* | ***C 10L 1/10*** |
| | ***C 10L 1/16*** |
| EP 2084279* | ***C 12N 15/09*** |
| | ***C 12N 15/32*** |
| EP 2086504* | ***A 61K 9/06*** |
| | ***A 61K 31/196*** |
| | ***A 61K 47/10*** |
| | ***A 61K 47/32*** |
| | ***A 61K 47/36*** |
| | ***A 61K 47/38*** |
| | ***A 61K 9/00*** |
| EP 2086591* | ***A 61K 48/00*** |
| EP 2086981* | ***C 07D 487/04*** |
| | ***A 61K 31/55*** |
| | ***A 61P 35/00*** |
| EP 2093368 | ***E 06B 1/62*** |
| EP 2094672* | ***C 07D 239/94*** |
| | ***A 61K 31/517*** |
| | ***A 61P 43/00*** |
| EP 2095082* | ***G 01K 5/00*** |
| | ***G 01K 5/48*** |
| | ***G 01K 15/00*** |
| | ***G 01K 5/54*** |
| | ***G 01D 5/26*** |
| | ***G 01K 5/52*** |
| EP 2099430* | ***A 61K 9/20*** |
| | ***A 61K 31/155*** |

| Broj objave evropske prijave patenta | (51) |
|---|---|
| EP 2099760* | ***C 07D 215/22*** |
| | ***C 07D 401/06*** |
| | ***C 07D 401/10*** |
| | ***C 07D 405/06*** |
| | ***C 07D 405/10*** |
| | ***C 07D 409/10*** |
| | ***A 61K 31/435*** |
| | ***A 61P 31/00*** |
| EP 2099791* | ***C 07D 409/06*** |
| | ***A 61K 31/381*** |
| | ***A 61P 3/00*** |
| EP 2099883* | ***C 10L 1/18*** |
| EP 2099884* | ***C 10L 1/18*** |
| EP 2104513* | ***A 61K 39/395*** |
| | ***C 07K 16/46*** |
| | ***C 07K 16/28*** |
| | ***A 61P 35/00*** |
| EP 2107906* | ***A 61K 31/519*** |
| | ***A 61K 31/704*** |
| | ***A 61K 31/7068*** |
| | ***A 61K 45/06*** |
| | ***A 61P 35/02*** |
| EP 2107907* | ***A 61K 31/519*** |
| | ***A 61P 37/00*** |
| | ***A 61P 9/00*** |
| | ***A 61K 31/403*** |
| EP 2113513 | ***C 07K 14/47*** |
| EP 2114895* | ***C 07D 233/00*** |
| | ***C 07D 403/00*** |
| EP 2115159* | ***C 12Q 1/25*** |
| | ***G 01N 33/50*** |
| EP 2115550* | ***G 06F 1/32*** |
| EP 2115627* | ***G 06F 17/00*** |
| | ***G 06F 3/00*** |
| | ***G 06F 13/00*** |
| | ***G 06F 9/00*** |
| EP 2118937* | ***H 01L 31/052*** |
| | ***H 01L 31/0352*** |
| EP 2119777 | ***C 12N 15/09*** |
| | ***C 07K 16/18*** |
| | ***C 12N 5/06*** |
| | ***C 12Q 1/02*** |
| | ***C 12Q 1/68*** |
| | ***G 01N 33/53*** |
| | ***C 12P 21/08*** |
| EP 2120883* | ***A 61K 9/20*** |
| | ***A 61K 9/28*** |
| | ***A 61K 31/427*** |
| EP 2120920* | ***A 61K 31/22*** |
| | ***C 07C 53/00*** |
| | ***A 61P 25/00*** |
| | ***A 61P 29/00*** |
| EP 2121604* | ***C 07D 209/52*** |
| EP 2121687* | ***C 07D 471/04*** |
| | ***C 07D 487/04*** |
| | ***A 61K 31/437*** |
| | ***A 61P 35/00*** |

| Broj objave evropske prijave patenta | (51) |
|---|---|
| EP 2122171* | ***E 04H 4/12*** |
| | ***F 04B 49/06*** |
| | ***F 04B 49/20*** |
| | ***F 04D 15/00*** |
| | ***G 05D 7/06*** |
| EP 2123641 | ***C 07D 239/84*** |
| EP 2124914* | ***A 61K 31/137*** |
| | ***A 61K 31/4164*** |
| | ***A 61P 31/10*** |
| EP 2125743* | ***C 07D 217/20*** |
| | ***C 07B 57/00*** |
| EP 2125777* | ***C 07D 401/02*** |
| | ***A 61K 31/47*** |
| | ***C 07D 403/02*** |
| | ***A 61K 31/517*** |
| EP 2125869* | ***C 07K 5/00*** |
| | ***A 61K 38/16*** |
| EP 2126556* | ***G 01N 27/26*** |
| | ***G 06K 7/10*** |
| | ***G 01N 35/00*** |
| | ***A 61B 5/145*** |
| | ***B 01L 3/00*** |
| EP 2129823* | ***D 06F 37/26*** |
| EP 2129973* | ***F 24J 1/00*** |
| EP 2132181* | ***C 07D 217/20*** |
| | ***C 07B 57/00*** |
| EP 2136808* | ***A 61K 31/501*** |
| | ***A 61P 31/10*** |
| | ***A 01N 43/60*** |
| EP 2137152* | ***C 07D 211/62*** |
| | ***C 07D 401/06*** |
| | ***C 07D 401/12*** |
| | ***C 07D 417/12*** |
| | ***A 61K 31/165*** |
| | ***A 61K 31/445*** |
| | ***A 61P 1/00*** |
| | ***A 61P 1/06*** |
| EP 2137155* | ***C 07D 215/52*** |
| | ***A 61K 31/47*** |
| | ***A 61P 1/00*** |
| | ***A 61P 11/00*** |
| | ***A 61P 15/00*** |
| | ***A 61P 25/00*** |
| | ***A 61P 35/00*** |
| EP 2138402 | ***B 64F 5/00*** |
| | ***E 04G 1/36*** |
| EP 2138509 | ***C 07K 14/47*** |
| | ***A 61K 39/00*** |
| EP 2139482* | ***A 61K 31/496*** |
| | ***A 61P 35/00*** |
| EP 2146184 | ***G 01C 21/34*** |
| EP 2156937 | ***B 29C 45/28*** |
| EP 2163196 | ***A 61B 5/053*** |
| EP 2186511 | ***A 61K 31/15*** |
| | ***A 61P 25/00*** |
| EP 2187144 | ***F 24H 3/00*** |
| EP 2202174 | ***B 65D 43/02*** |
| | ***B 65D 77/20*** |

| Broj objave evropske prijave patenta | (51) |
|---|---|
| EP 2204340 | ***B 65D 88/12*** |
| | ***B 65D 88/06*** |
| | ***B 01D 21/02*** |
| | ***C 02F 1/00*** |
| EP 2204781 | ***G 07F 1/04*** |
| EP 2216180 | ***B 41J 2/175*** |
| EP 2216582 | ***F 16M 13/02*** |
| EP 2233292 | ***B 41J 2/01*** |
| EP 2233297 | ***B 41J 2/175*** |
| EP 2233305 | ***B 41J 11/66*** |
| | ***B 41J 2/01*** |
| | ***B 41J 3/54*** |
| EP 2233932 | ***G 01P 3/68*** |
| | ***G 01P 3/36*** |
| | ***A 63B 69/36*** |
| EP 2236664 | ***D 21B 1/16*** |
| | ***D 21C 9/00*** |
| | ***D 21D 1/00*** |
| | ***D 21H 11/00*** |
| | ***D 21H 11/18*** |
| EP 2238818 | ***A 01B 3/42*** |
| | ***A 01B 3/46*** |
| EP 2238986 | ***A 61K 39/395*** |
| | ***A 61P 25/00*** |
| | ***C 07K 16/18*** |
| | ***C 07K 16/28*** |
| EP 2239340 | ***C 12Q 1/68*** |
| EP 2239580 | ***G 01N 33/574*** |
| EP 2241284 | ***A 61F 2/01*** |
| | ***A 61F 2/82*** |
| | ***A 61F 2/00*** |
| | ***A 61F 2/02*** |
| | ***A 61F 2/84*** |
| EP 2241318 | ***A 61K 31/47*** |
| EP 2241507 | ***B 65B 39/00*** |
| | ***B 65B 39/04*** |
| | ***B 65B 31/04*** |
| | ***B 65B 55/02*** |
| EP 2241577 | ***C 07K 16/28*** |
| | ***A 61P 35/02*** |
| | ***A 61K 39/395*** |
| | ***C 12N 5/00*** |
| EP 2243419 | ***A 61B 3/028*** |
| EP 2243529 | ***B 01D 3/00*** |
| EP 2243877 | ***D 06F 75/12*** |
| | ***D 06F 75/38*** |
| EP 2243950 | ***F 02M 55/00*** |
| EP 2246261 | ***B 65B 1/24*** |
| | ***B 65B 61/24*** |
| EP 2246267 | ***B 65D 23/02*** |
| | ***B 05B 11/00*** |
| | ***B 29C 49/18*** |
| | ***B 29C 49/24*** |
| | ***B 29C 49/16*** |
| | ***B 29C 49/06*** |
| EP 2246543 | ***F 02B 37/007*** |
| | ***F 02B 37/02*** |
| | ***F 02B 37/18*** |
| | ***F 01N 13/10*** |
| | ***F 02F 1/24*** |

| Broj objave evropske prijave patenta | (51) |
|---|---|
| EP 2248429 | ***A 22C 21/00*** |
| | ***A 22C 21/06*** |
| EP 2248450 | ***A 47J 19/06*** |
| | ***B 26D 3/26*** |
| | ***B 30B 1/12*** |
| EP 2249021 | ***F 02M 47/02*** |
| | ***F 02M 55/00*** |
| | ***F 02M 69/54*** |
| | ***F 02M 63/02*** |
| EP 2249088 | ***F 24C 15/20*** |
| EP 2249141 | ***G 01N 11/04*** |
| EP 2250871 | ***A 01D 41/127*** |
| EP 2250951 | ***A 47J 37/06*** |
| EP 2251029 | ***A 61K 38/40*** |
| | ***A 23L 1/29*** |
| | ***A 23L 1/305*** |
| | ***A 23J 1/20*** |
| | ***A 23C 9/152*** |
| | ***A 23C 19/05*** |
| | ***A 23C 23/00*** |
| | ***A 61P 1/00*** |
| EP 2251030 | ***A 61K 38/40*** |
| | ***A 23L 1/29*** |
| | ***A 23L 1/305*** |
| | ***A 23J 1/20*** |
| | ***A 23C 19/05*** |
| | ***A 23C 9/152*** |
| | ***A 23C 23/00*** |
| | ***A 61P 25/28*** |
| EP 2251034 | ***A 61K 39/00*** |
| | ***A 61K 39/15*** |
| | ***A 61K 39/17*** |
| | ***A 61K 39/145*** |
| EP 2251116 | ***B 21F 25/00*** |
| | ***G 08B 13/12*** |
| EP 2251321 | ***C 07C 245/08*** |
| | ***C 07C 309/46*** |
| EP 2251324 | ***C 07C 271/10*** |
| | ***C 07D 215/04*** |
| | ***C 07D 237/08*** |
| | ***C 07D 233/54*** |
| | ***C 07D 235/14*** |
| | ***C 07D 263/32*** |
| | ***C 07D 471/04*** |
| | ***A 61P 29/00*** |
| | ***A 61P 25/00*** |
| EP 2251387 | ***C 09B 35/031*** |
| | ***C 09D 11/00*** |
| | ***D 06P 3/14*** |
| | ***D 06P 3/24*** |
| | ***C 09B 29/36*** |
| EP 2251418 | ***C 12N 5/0784*** |
| | ***A 61K 39/00*** |
| EP 2251452 | ***C 23C 16/505*** |
| | ***G 01N 15/08*** |
| | ***A 61B 5/15*** |
| EP 2251454 | ***C 23C 16/505*** |
| | ***C 23C 16/52*** |
| | ***C 23C 16/54*** |
| | ***G 01N 15/08*** |
| | ***A 61B 5/15*** |

| Broj objave evropske prijave patenta | (51) |
|---|---|
| EP 2253600 | ***C 04B 7/02*** |
| | ***C 04B 28/00*** |
| EP 2253614 | ***C 07D 207/06*** |
| | ***C 07D 207/08*** |
| | ***C 07D 207/09*** |
| | ***C 07D 401/04*** |
| | ***C 07D 401/12*** |
| | ***C 07D 403/04*** |
| | ***C 07D 403/12*** |
| | ***C 07D 405/12*** |
| | ***C 07D 409/12*** |
| | ***C 07D 413/04*** |
| | ***C 07D 413/14*** |
| | ***C 07D 417/04*** |
| | ***C 07D 471/04*** |
| | ***C 07D 487/04*** |
| | ***A 61K 31/40*** |
| | ***A 61K 31/4025*** |
| | ***A 61K 31/437*** |
| | ***A 61K 31/55*** |
| | ***A 61P 35/00*** |
| EP 2253735 | ***C 23C 16/505*** |
| | ***C 23C 16/54*** |
| | ***G 01N 15/08*** |
| | ***A 61B 5/15*** |
| | ***C 23C 16/04*** |
| | ***C 23C 16/52*** |
| EP 2253736 | ***C 23C 18/44*** |
| EP 2253772 | ***E 04D 13/17*** |
| | ***E 04D 13/14*** |
| EP 2253788 | ***E 05D 11/10*** |
| | ***E 05F 1/00*** |
| EP 2254068 | ***G 06F 19/00*** |
| EP 2256014 | ***B 62B 5/02*** |
| EP 2256066 | ***B 65D 90/18*** |
| | ***B 65G 7/04*** |
| EP 2256124 | ***C 07F 9/6561*** |
| | ***A 61K 31/675*** |
| EP 2256203 | ***C 12N 15/12*** |
| | ***C 07K 14/715*** |
| | ***C 12N 15/24*** |
| | ***C 07K 14/54*** |
| | ***A 61K 38/20*** |
| | ***A 61K 39/00*** |
| | ***A 61K 31/7088*** |
| | ***C 12Q 1/68*** |
| | ***G 01N 33/53*** |
| | ***A 61K 48/00*** |
| | ***A 61P 37/00*** |
| EP 2256275 | ***E 05D 11/10*** |
| | ***E 05F 1/00*** |
| | ***E 05F 3/22*** |
| EP 2261542 | ***F 16L 11/08*** |
| EP 2266769 | ***B 28B 11/24*** |
| EP 2271219* | ***A 01N 43/90*** |
| | ***A 01P 3/00*** |
| EP 2272831 | ***C 07D 213/46*** |
| EP 2275521 | ***C 10L 5/08*** |
| EP 2280602* | ***A 01N 43/10*** |
| | ***A 01N 43/56*** |
| | ***A 01N 43/42*** |

| Broj objave evropske prijave patenta | (51) |
|---|---|
| EP 2284750 | ***G 06F 21/00*** |
| EP 2285221* | ***A 01N 43/80*** |
| | ***A 01N 37/34*** |
| | ***A 01N 37/40*** |
| | ***A 01N 43/58*** |
| | ***A 01N 43/64*** |
| | ***A 01N 43/68*** |
| | ***A 01N 43/70*** |
| | ***A 01N 43/707*** |
| | ***A 01N 43/88*** |
| | ***A 01N 47/22*** |
| | ***A 01N 47/30*** |
| | ***A 01N 47/36*** |
| | ***A 01N 61/00*** |
| EP 2286919 | ***B 01L 3/00*** |
| | ***B 01L 3/14*** |
| | ***A 61B 10/00*** |
| | ***G 01N 1/40*** |
| EP 2288257* | ***A 01N 25/28*** |
| | ***B 01J 13/04*** |
| | ***B 01J 13/14*** |
| | ***A 01P 7/04*** |
| EP 2294083* | ***C 07K 14/715*** |
| EP 2298099 | ***A 43B 7/06*** |
| | ***A 43B 7/12*** |
| EP 2298100 | ***A 43B 7/06*** |
| | ***A 43B 7/12*** |
| EP 2298101 | ***A 43B 7/12*** |
| | ***A 43B 7/06*** |
| EP 2305085 | ***A 47K 3/34*** |
| | ***E 05D 15/06*** |
| EP 2309408 | ***G 06F 21/00*** |
| EP 2323485* | ***A 01N 59/00*** |
| | ***A 01N 59/06*** |
| | ***A 01N 59/08*** |
| | ***A 01N 59/16*** |
| | ***A 61K 33/00*** |
| EP 2323487* | ***A 01P 3/00*** |
| | ***A 01N 59/02*** |
| | ***A 01N 43/40*** |
| | ***A 01N 43/42*** |
| | ***A 01N 43/56*** |
| | ***A 01N 43/78*** |
| | ***A 01N 43/90*** |
| | ***A 01N 43/653*** |
| | ***A 01N 47/44*** |
| | ***A 01N 47/24*** |
| | ***A 01N 47/14*** |
| | ***A 01N 37/06*** |
| EP 2323499* | ***A 23J 3/14*** |
| | ***A 23J 1/14*** |
| | ***A 23K 1/14*** |
| | ***A 23L 1/305*** |
| | ***C 07K 1/14*** |
| | ***C 07K 14/415*** |
| EP 2323610* | ***A 61H 3/04*** |
| EP 2323626* | ***A 61K 9/16*** |
| | ***A 61K 38/18*** |
| EP 2323634* | ***A 61K 9/22*** |
| | ***A 61K 9/28*** |
| | ***A 61K 31/404*** |

| Broj objave evropske prijave patenta | (51) |
|---|---|
| EP 2323639* | ***A 61K 31/01*** |
| | ***A 61K 31/047*** |
| | ***A 61P 17/02*** |
| | ***A 61P 17/06*** |
| | ***A 61K 8/30*** |
| | ***A 61K 8/92*** |
| EP 2323642* | ***A 61K 31/14*** |
| | ***A 61K 31/19*** |
| | ***A 61K 31/195*** |
| | ***A 61K 31/352*** |
| | ***A 61K 31/473*** |
| | ***A 61K 31/49*** |
| | ***A 61K 31/5415*** |
| | ***A 61K 31/56*** |
| | ***A 61K 31/60*** |
| | ***A 61P 27/02*** |
| EP 2323646* | ***A 61K 31/18*** |
| | ***A 61P 15/06*** |
| EP 2323647* | ***A 61K 31/23*** |
| | ***A 61P 9/06*** |
| EP 2323650* | ***A 61K 31/40*** |
| | ***A 61K 31/4025*** |
| | ***A 61K 31/403*** |
| | ***A 61K 31/422*** |
| | ***A 61K 31/4375*** |
| | ***A 61K 31/4439*** |
| | ***A 61K 31/4985*** |
| | ***A 61K 31/5025*** |
| | ***A 61K 31/506*** |
| | ***A 61K 31/513*** |
| | ***A 61K 31/522*** |
| | ***A 61P 3/10*** |
| EP 2323657* | ***A 61K 31/44*** |
| | ***A 61P 27/00*** |
| | ***A 61P 27/06*** |
| EP 2323663* | ***A 61K 31/497*** |
| EP 2323672* | ***A 61K 33/06*** |
| | ***A 61K 33/12*** |
| | ***A 61P 17/00*** |
| EP 2323678* | ***A 61K 38/00*** |
| EP 2323687* | ***A 61K 38/18*** |
| | ***G 01N 33/68*** |
| | ***A 61P 25/28*** |
| EP 2323695* | ***A 61K 47/48*** |
| EP 2323737* | ***A 61P 35/00*** |
| | ***A 61P 29/00*** |
| | ***A 61K 31/4196*** |
| | ***C 07D 249/12*** |
| | ***C 07D 249/14*** |
| | ***C 07D 249/08*** |
| | ***C 07D 401/04*** |
| | ***C 07D 401/10*** |
| | ***C 07D 401/14*** |
| | ***C 07D 403/04*** |
| | ***C 07D 403/08*** |
| | ***C 07D 403/10*** |
| | ***C 07D 403/12*** |
| | ***C 07D 403/14*** |
| | ***C 07D 405/04*** |
| EP 2323767* | ***B 01L 3/00*** |
| EP 2323770* | ***B 02C 13/28*** |

| Broj objave evropske prijave patenta | (51) |
|---|---|
| EP 2323813* | ***B 24D 18/00*** |
| | ***B 24D 3/32*** |
| EP 2323840* | ***B 31F 1/20*** |
| | ***B 30B 3/00*** |
| | ***B 30B 11/18*** |
| EP 2323842* | ***B 32B 13/04*** |
| EP 2323886* | ***B 61F 15/20*** |
| | ***B 61L 25/02*** |
| | ***B 61D 43/00*** |
| EP 2323920* | ***B 65D 75/58*** |
| EP 2323970* | ***C 07C 233/79*** |
| | ***C 07C 255/58*** |
| | ***C 07C 311/39*** |
| | ***C 07D 213/74*** |
| | ***C 07D 213/75*** |
| | ***C 07D 213/84*** |
| | ***C 07D 277/42*** |
| | ***A 61K 31/166*** |
| | ***A 61K 31/427*** |
| | ***A 61K 31/44*** |
| | ***A 61P 1/00*** |
| EP 2323972* | ***C 07C 237/26*** |
| | ***C 07C 239/20*** |
| | ***C 07C 275/16*** |
| | ***C 07C 275/42*** |
| | ***C 07C 311/08*** |
| | ***C 07C 311/21*** |
| | ***C 07D 205/04*** |
| | ***C 07D 207/08*** |
| | ***C 07D 207/10*** |
| | ***C 07D 207/12*** |
| | ***C 07D 207/14*** |
| | ***C 07D 207/16*** |
| | ***C 07D 207/34*** |
| | ***C 07D 209/44*** |
| | ***C 07D 209/52*** |
| EP 2323992* | ***C 07D 239/48*** |
| | ***C 07D 401/04*** |
| | ***C 07D 401/06*** |
| | ***C 07D 403/06*** |
| | ***C 07D 403/14*** |
| | ***C 07D 409/06*** |
| | ***C 07D 413/14*** |
| | ***A 61K 31/495*** |
| EP 2324002* | ***C 07D 309/10*** |
| | ***C 07D 309/08*** |
| | ***A 61K 31/353*** |
| | ***A 61P 3/10*** |
| | ***A 61P 3/00*** |
| EP 2324012* | ***C 07D 403/00*** |
| | ***C 07D 209/34*** |
| | ***C 07D 401/04*** |
| | ***C 07D 403/04*** |
| | ***A 61K 31/506*** |
| | ***A 61P 35/00*** |
| EP 2324013* | ***C 07D 403/04*** |
| | ***A 61K 31/498*** |
| | ***A 61P 25/04*** |

| Broj objave evropske prijave patenta | (51) |
|---|---|
| EP 2324015* | ***C 07D 409/06*** |
| | ***C 07D 409/14*** |
| | ***A 61K 31/445*** |
| | ***A 61P 29/00*** |
| | ***A 61P 25/00*** |
| | ***A 61P 3/00*** |
| | ***C 07D 417/06*** |
| | ***C 07D 417/14*** |
| | ***C 07D 333/38*** |
| | ***C 07D 211/64*** |
| | ***C 07D 205/04*** |
| | ***C 07D 211/38*** |
| | ***C 07D 211/62*** |
| | ***A 61K 31/381*** |
| | ***A 61K 31/397*** |
| | ***A 61K 31/4535*** |
| | ***A 61K 31/4545*** |
| | ***A 61P 1/00*** |
| | ***A 61P 19/00*** |
| EP 2324017* | ***C 07D 413/10*** |
| | ***C 07D 413/14*** |
| | ***A 61K 31/5355*** |
| | ***A 61P 3/00*** |
| | ***A 61P 19/10*** |
| | ***A 61P 25/00*** |
| EP 2324018* | ***C 07D 413/10*** |
| | ***C 07D 413/14*** |
| | ***A 61K 31/5355*** |
| | ***A 61P 19/10*** |
| EP 2324024* | ***C 07D 471/14*** |
| | ***A 61K 31/519*** |
| | ***A 61P 35/00*** |
| EP 2324025* | ***C 07D 473/16*** |
| | ***C 07D 473/18*** |
| | ***A 61K 31/522*** |
| | ***A 61P 37/00*** |
| | ***A 61P 35/00*** |
| EP 2324026* | ***C 07D 473/18*** |
| | ***C 07D 473/16*** |
| | ***A 61K 31/522*** |
| | ***A 61P 37/00*** |
| | ***A 61P 35/00*** |
| EP 2324028* | ***C 07D 487/04*** |
| | ***A 61K 31/519*** |
| | ***A 61P 3/04*** |
| | ***A 61P 3/10*** |
| EP 2324031* | ***C 07D 491/04*** |
| | ***A 61K 31/473*** |
| | ***A 61K 31/4525*** |
| EP 2324055* | ***C 07K 14/47*** |
| EP 2324062* | ***C 07K 19/00*** |
| | ***A 61K 39/155*** |
| | ***A 61K 39/385*** |
| | ***A 61P 31/14*** |
| | ***A 61P 37/04*** |
| | ***C 07K 14/135*** |
| | ***C 12N 15/44*** |
| | ***C 12N 15/62*** |
| EP 2324099* | ***C 10G 1/02*** |
| | ***C 10G 3/00*** |
| | ***C 10G 9/00*** |

| Broj objave evropske prijave patenta | (51) |
|---|---|
| EP 2324126* | ***C 12Q 1/68*** |
| EP 2324157* | ***E 01C 19/10*** |
| EP 2324179* | ***E 05F 15/16*** |
| | ***E 05F 15/14*** |
| | ***E 05F 15/00*** |
| EP 2324242* | ***F 03D 3/04*** |
| | ***F 03D 11/00*** |
| EP 2324387* | ***G 02B 26/08*** |
| | ***G 02B 26/06*** |
| EP 2324449* | ***G 06Q 30/00*** |
| EP 2324470* | ***G 09F 3/00*** |
| EP 2324711 | ***A 21C 9/02*** |
| | ***A 21C 15/00*** |
| EP 2324826 | ***A 61K 31/198*** |
| | ***A 23L 1/22*** |
| | ***A 23L 1/305*** |
| | ***A 61K 9/10*** |
| | ***A 61K 9/14*** |
| | ***A 61K 9/20*** |
| | ***A 61K 9/48*** |
| | ***A 61K 47/08*** |
| | ***A 61K 47/12*** |
| | ***A 61K 47/36*** |
| | ***A 61K 47/38*** |
| | ***A 61P 1/14*** |
| | ***A 61P 3/02*** |
| | ***A 61P 17/14*** |
| | ***A 61P 17/16*** |
| | ***A 61P 21/00*** |
| | ***A 61P 37/04*** |
| | ***A 61P 43/00*** |
| EP 2324831 | ***A 61K 31/4412*** |
| | ***A 61P 11/00*** |
| EP 2324853 | ***A 61K 45/06*** |
| EP 2325201 | ***C 07K 14/54*** |
| EP 2325208 | ***C 07K 16/18*** |
| | ***C 12N 15/13*** |
| EP 2325293 | ***C 12M 1/00*** |
| EP 2326169* | ***A 01N 25/04*** |
| | ***A 01N 47/36*** |
| | ***A 01N 43/40*** |
| | ***A 01N 43/60*** |
| | ***A 01N 57/20*** |
| | ***A 01N 39/04*** |
| | ***A 01N 37/10*** |
| | ***A 01N 43/90*** |
| | ***A 01N 47/30*** |
| | ***A 01N 37/40*** |
| | ***A 01N 39/02*** |
| | ***A 01N 37/48*** |
| | ***A 01N 43/653*** |
| | ***A 01N 41/10*** |
| | ***A 01N 43/80*** |
| EP 2326172* | ***A 01N 37/18*** |
| EP 2326208* | ***A 46B 15/00*** |
| | ***A 61C 19/04*** |
| EP 2326222* | ***A 47J 31/30*** |
| EP 2326223* | ***A 47J 31/36*** |
| | ***A 47J 31/06*** |
| | ***B 65D 85/804*** |

| Broj objave evropske prijave patenta | (51) |
|---|---|
| EP 2326304* | ***A 61K 9/00*** |
| | ***A 61K 47/34*** |
| EP 2326306* | ***A 61K 9/08*** |
| | ***A 61K 47/20*** |
| | ***A 61K 31/4184*** |
| EP 2326312* | ***A 61K 9/22*** |
| | ***A 61K 9/28*** |
| | ***A 61K 9/48*** |
| | ***A 61K 31/517*** |
| EP 2326319* | ***A 61K 31/185*** |
| EP 2326324* | ***A 61K 31/343*** |
| | ***A 61P 9/10*** |
| | ***A 61K 9/28*** |
| EP 2326326* | ***A 61K 31/40*** |
| | ***A 61K 31/4985*** |
| | ***A 61K 31/403*** |
| | ***A 61K 31/422*** |
| | ***A 61K 31/44*** |
| | ***A 61K 31/473*** |
| | ***A 61K 31/496*** |
| | ***A 61K 31/53*** |
| | ***A 61K 31/522*** |
| | ***A 61K 9/20*** |
| | ***A 61P 17/02*** |
| | ***A 61K 31/4196*** |
| EP 2326345* | ***A 61K 39/00*** |
| EP 2326351* | ***A 61K 47/48*** |
| EP 2326371* | ***A 61M 5/31*** |
| | ***A 61M 5/32*** |
| | ***A 61M 5/00*** |
| EP 2326373* | ***A 61M 11/06*** |
| | ***A 61M 15/08*** |
| | ***A 61M 31/00*** |
| EP 2326438* | ***B 21D 39/02*** |
| | ***B 21D 39/00*** |
| | ***B 62D 65/06*** |
| EP 2326442* | ***B 22D 17/04*** |
| | ***C 22C 18/00*** |
| EP 2326565* | ***B 65D 43/14*** |
| EP 2326621* | ***C 07D 209/70*** |
| | ***C 07D 209/88*** |
| | ***C 07D 401/12*** |
| | ***C 07D 403/12*** |
| | ***C 07D 417/12*** |
| | ***A 61P 37/00*** |
| | ***A 61K 31/403*** |
| EP 2326625* | ***C 07D 223/16*** |
| | ***C 07D 401/06*** |
| | ***C 07D 401/12*** |
| | ***C 07D 401/14*** |
| | ***C 07D 403/12*** |
| | ***C 07D 405/12*** |
| | ***C 07D 405/14*** |
| | ***C 07D 409/12*** |
| | ***C 07D 409/14*** |
| | ***C 07D 413/12*** |
| | ***C 07D 417/12*** |
| | ***A 61K 31/55*** |
| | ***A 61P 25/18*** |

| Broj objave evropske prijave patenta | (51) |
|---|---|
| EP 2326631* | ***C 07D 273/02*** |
| | ***C 07D 209/04*** |
| | ***C 07D 263/56*** |
| | ***C 07D 249/18*** |
| | ***A 61P 35/00*** |
| EP 2326635* | ***C 07D 319/20*** |
| | ***A 61K 31/357*** |
| | ***A 61P 25/18*** |
| | ***A 61P 25/24*** |
| EP 2326651* | ***C 07D 489/12*** |
| | ***A 61K 31/485*** |
| | ***A 61P 25/04*** |
| EP 2326653* | ***C 07D 493/04*** |
| | ***A 61K 31/36*** |
| | ***A 61P 35/00*** |
| EP 2326707* | ***C 12N 1/00*** |
| | ***C 12N 1/19*** |
| EP 2326730* | ***C 12Q 1/68*** |
| | ***C 12P 19/34*** |
| | ***C 07H 21/00*** |
| EP 2326738* | ***C 22C 1/05*** |
| | ***B 02C 2/00*** |
| EP 2326775* | ***E 04C 2/288*** |
| | ***E 04C 2/04*** |
| EP 2326875* | ***F 23C 10/00*** |
| EP 2326955* | ***G 01N 33/533*** |
| | ***G 01N 33/58*** |
| | ***C 07K 1/13*** |
| | ***C 09K 11/77*** |
| | ***G 01N 21/64*** |
| EP 2327182* | ***H 04L 5/00*** |
| EP 2327201* | ***H 04M 1/725*** |
| | ***G 06F 3/01*** |
| | ***G 06F 3/048*** |
| EP 2327324 | ***A 45B 25/16*** |
| | ***A 45B 25/14*** |
| EP 2327450 | ***A 61N 7/02*** |
| | ***A 61B 18/00*** |
| | ***A 61B 17/225*** |
| | ***A 61B 17/00*** |
| EP 2327706 | ***C 07D 498/22*** |
| EP 2328063 | ***G 06F 3/01*** |
| EP 2328065 | ***G 06F 3/041*** |
| | ***G 06F 3/01*** |
| | ***G 06F 3/048*** |
| EP 2328068 | ***G 06F 3/048*** |
| EP 2328405* | ***A 01H 5/00*** |
| | ***C 12N 15/82*** |
| | ***C 12N 5/10*** |
| EP 2328414* | ***A 01N 43/64*** |
| | ***A 61K 31/41*** |
| EP 2328417* | ***A 01N 47/28*** |
| EP 2328427* | ***A 23L 1/31*** |
| | ***A 23L 1/314*** |
| | ***A 23L 1/315*** |
| | ***A 23L 1/317*** |
| EP 2328527* | ***A 61F 9/00*** |
| | ***A 61F 9/007*** |
| EP 2328562* | ***A 61K 9/20*** |
| | ***A 61K 31/165*** |
| | ***A 61K 31/41*** |

| Broj objave evropske prijave patenta | (51) |
|---|---|
| EP 2328564* | ***A 61K 9/20*** |
| EP 2328583* | ***A 61K 31/4523*** |
| | ***A 61P 13/00*** |
| EP 2328601* | ***A 61K 38/00*** |
| | ***A 61K 9/50*** |
| | ***A 61K 9/16*** |
| | ***A 61K 9/20*** |
| | ***A 61K 9/48*** |
| EP 2328613* | ***A 61K 39/385*** |
| EP 2328615* | ***A 61K 39/395*** |
| EP 2328616* | ***A 61K 39/395*** |
| | ***C 07K 16/18*** |
| EP 2328618* | ***A 61K 47/32*** |
| EP 2328693* | ***B 07C 5/342*** |
| EP 2328868* | ***C 07D 211/46*** |
| | ***A 61K 31/445*** |
| | ***A 61P 13/00*** |
| EP 2328869* | ***C 07D 211/80*** |
| | ***C 07D 213/02*** |
| | ***C 07D 401/12*** |
| | ***A 61K 31/4418*** |
| | ***A 61P 9/02*** |
| | ***A 61P 11/00*** |
| EP 2328872* | ***C 07D 231/14*** |
| | ***A 61K 31/496*** |
| | ***A 61P 35/00*** |
| EP 2328874* | ***C 07D 233/42*** |
| | ***C 07D 233/30*** |
| | ***A 61K 31/44*** |
| | ***A 61P 3/00*** |
| EP 2328877* | ***C 07D 241/40*** |
| | ***C 07D 319/18*** |
| | ***C 07D 335/04*** |
| | ***C 07D 265/36*** |
| | ***C 07D 279/16*** |
| | ***A 61K 31/535*** |
| | ***A 61P 21/00*** |
| EP 2328879* | ***C 07D 249/08*** |
| | ***C 07D 249/12*** |
| | ***C 07D 249/10*** |
| | ***A 61K 31/4196*** |
| | ***A 61P 9/10*** |
| | ***A 61P 19/02*** |
| EP 2328891* | ***C 07D 405/04*** |
| | ***A 61K 31/443*** |
| | ***A 61K 51/04*** |
| | ***A 61P 25/28*** |
| | ***C 07D 307/78*** |
| EP 2328893* | ***C 07D 413/10*** |
| | ***C 07D 405/14*** |
| | ***C 07D 249/10*** |
| | ***A 61K 31/343*** |
| | ***A 61K 31/4196*** |
| EP 2328900* | ***C 07D 489/08*** |
| | ***C 07D 489/02*** |
| | ***B 01J 23/42*** |
| EP 2328902* | ***C 07D 498/04*** |
| | ***A 61K 31/424*** |
| | ***A 61P 43/00*** |

| Broj objave evropske prijave patenta | (51) |
|---|---|
| EP 2328903* | ***C 07D 498/10*** |
| | ***C 07D 513/10*** |
| | ***A 61K 31/424*** |
| | ***A 61K 31/429*** |
| | ***A 61P 25/28*** |
| EP 2328922* | ***C 07K 14/62*** |
| | ***C 07K 14/46*** |
| EP 2328931* | ***C 07K 16/26*** |
| | ***G 01N 33/577*** |
| | ***A 61K 39/395*** |
| | ***A 61P 7/06*** |
| EP 2329008* | ***C 12N 1/18*** |
| | ***C 12R 1/865*** |
| EP 2329028* | ***C 12N 15/82*** |
| EP 2329052* | ***C 22C 1/05*** |
| | ***E 02F 9/28*** |
| EP 2329079* | ***E 01B 1/00*** |
| | ***E 01B 21/02*** |
| EP 2329284* | ***G 01S 1/00*** |
| | ***G 06K 19/077*** |
| | ***G 01C 21/20*** |
| EP 2329339* | ***G 06F 3/01*** |
| | ***G 06F 3/048*** |
| | ***H 04M 1/725*** |
| EP 2329480* | ***G 09B 23/28*** |
| | ***G 08B 6/00*** |
| | ***G 06G 7/60*** |
| | ***G 06G 7/48*** |
| EP 2329563* | ***H 01Q 7/06*** |
| | ***H 01Q 1/22*** |
| | ***G 06K 19/077*** |
| EP 2329599* | ***H 03L 7/18*** |
| | ***G 01R 25/00*** |
| EP 2329636* | ***H 04M 1/725*** |
| | ***G 06F 3/01*** |
| | ***G 06F 3/048*** |
| EP 2329637* | ***H 04M 1/725*** |
| | ***G 06F 3/01*** |
| | ***G 06F 3/048*** |
| EP 2329824 | ***A 61K 31/5375*** |
| | ***A 61P 25/04*** |
| | ***C 07D 265/30*** |
| EP 2329848 | ***A 61K 45/06*** |
| EP 2329983 | ***B 60K 7/00*** |
| | ***B 60K 17/04*** |
| EP 2330099 | ***C 07D 265/30*** |

| Broj objave evropske prijave patenta | (51) |
|---|---|
| EP 2330193 | ***C 12N 15/09*** |
| | ***A 61K 39/395*** |
| | ***A 61P 1/04*** |
| | ***A 61P 1/16*** |
| | ***A 61P 3/10*** |
| | ***A 61P 7/06*** |
| | ***A 61P 9/00*** |
| | ***A 61P 9/10*** |
| | ***A 61P 11/00*** |
| | ***A 61P 11/06*** |
| | ***A 61P 13/12*** |
| | ***A 61P 15/08*** |
| | ***A 61P 17/00*** |
| | ***A 61P 17/06*** |
| | ***A 61P 19/02*** |
| | ***A 61P 19/10*** |
| | ***A 61P 21/00*** |
| | ***A 61P 25/00*** |
| | ***A 61P 27/02*** |
| | ***A 61P 29/00*** |
| EP 2330424 | ***G 01N 33/68*** |
| EP 2330837 | ***H 04W 4/16*** |
| | ***H 04W 52/02*** |
| EP 2330899* | ***A 01N 43/40*** |
| | ***A 61K 31/445*** |
| EP 2330914* | ***A 23B 7/153*** |
| | ***A 23B 7/16*** |
| | ***A 23L 1/00*** |
| | ***A 23L 1/212*** |
| | ***A 23L 3/34*** |
| | ***A 23L 3/3454*** |
| | ***A 23N 15/00*** |
| | ***A 23P 1/08*** |
| EP 2330915* | ***A 23C 9/00*** |
| | ***A 23C 9/14*** |
| EP 2330924* | ***A 23L 1/29*** |
| | ***A 23L 1/30*** |
| | ***A 23L 1/304*** |
| | ***A 23L 1/302*** |
| | ***A 23L 1/303*** |
| EP 2330986* | ***A 61B 17/04*** |
| EP 2331065* | ***A 61K 9/00*** |
| | ***A 61K 9/06*** |
| | ***A 61K 9/107*** |
| | ***A 61K 31/345*** |
| | ***A 61K 31/4164*** |
| | ***A 61K 31/4174*** |
| | ***A 61K 31/4412*** |
| | ***A 61K 31/4418*** |
| | ***A 61K 31/4745*** |
| | ***A 61K 31/522*** |
| | ***A 61K 31/569*** |
| | ***A 61P 15/02*** |
| | ***A 61P 15/12*** |
| | ***A 61P 17/00*** |
| EP 2331067* | ***A 61K 9/00*** |
| | ***A 61K 9/16*** |
| | ***A 61K 9/70*** |
| | ***A 61K 31/565*** |

| Broj objave evropske prijave patenta | (51) |
|---|---|
| EP 2331077* | ***A 61K 9/16*** |
| | ***A 61K 9/48*** |
| | ***A 61K 9/20*** |
| | ***A 61K 9/50*** |
| | ***A 61K 38/00*** |
| EP 2331083* | ***A 61K 9/50*** |
| EP 2331091* | ***A 61K 31/216*** |
| | ***A 61K 31/513*** |
| | ***A 61P 35/00*** |
| | ***A 61P 35/04*** |
| EP 2331097* | ***A 61K 31/445*** |
| | ***C 07D 211/06*** |
| EP 2331118* | ***A 61K 39/00*** |
| | ***A 61P 35/00*** |
| | ***A 61K 38/08*** |
| | ***A 61K 38/16*** |
| EP 2331121* | ***A 61K 39/095*** |
| | ***C 07K 14/22*** |
| EP 2331126* | ***A 61K 39/39*** |
| EP 2331136* | ***A 61K 39/395*** |
| EP 2331137* | ***A 61K 45/06*** |
| | ***A 61K 31/517*** |
| | ***A 61K 31/472*** |
| | ***A 61P 13/08*** |
| | ***A 61P 13/10*** |
| EP 2331139* | ***A 61K 47/48*** |
| EP 2331140* | ***A 61K 47/48*** |
| | ***A 61P 35/00*** |
| EP 2331141* | ***A 61K 48/00*** |
| EP 2331199* | ***A 61N 1/30*** |
| EP 2331200* | ***A 61N 1/30*** |
| EP 2331271* | ***B 21C 37/15*** |
| | ***B 21C 37/20*** |
| | ***B 21D 5/08*** |
| | ***B 21D 5/12*** |
| | ***B 21D 15/02*** |
| EP 2331392* | ***B 63B 19/00*** |
| | ***B 63B 19/14*** |
| | ***B 63B 19/24*** |
| | ***B 63B 43/32*** |
| EP 2331414* | ***B 65D 5/38*** |
| | ***B 65D 5/72*** |
| EP 2331450* | ***B 67D 1/07*** |
| EP 2331495* | ***C 07C 231/08*** |
| | ***C 07C 233/03*** |
| EP 2331513* | ***C 07D 239/69*** |
| | ***C 07D 239/38*** |
| | ***C 07D 239/54*** |
| EP 2331515* | ***C 07D 261/02*** |
| | ***C 07D 413/12*** |
| | ***A 01N 43/80*** |
| | ***A 61P 29/00*** |
| EP 2331522* | ***C 07D 401/04*** |
| | ***C 07D 413/14*** |
| | ***C 07D 409/14*** |
| | ***C 07D 401/14*** |
| | ***C 07D 413/04*** |
| | ***C 07D 451/02*** |
| | ***A 61K 31/44*** |
| | ***A 61P 25/28*** |
| | ***A 61P 25/04*** |

| Broj objave evropske prijave patenta | (51) |
|---|---|
| EP 2331523* | ***C 07D 401/04*** |
| | ***C 07D 401/14*** |
| | ***C 07D 409/14*** |
| | ***C 07D 413/14*** |
| | ***C 07D 417/14*** |
| | ***C 07D 471/10*** |
| | ***A 61K 31/4545*** |
| | ***A 61K 31/5377*** |
| | ***A 61K 31/454*** |
| | ***A 61K 31/506*** |
| | ***A 61K 31/438*** |
| | ***A 61P 35/00*** |
| EP 2331534* | ***C 07D 413/12*** |
| | ***C 07D 417/12*** |
| | ***C 07D 263/57*** |
| | ***A 61P 3/00*** |
| | ***A 61K 31/42*** |
| | ***A 61P 3/10*** |
| | ***A 61K 31/423*** |
| | ***C 07D 277/66*** |
| EP 2331535* | ***C 07D 413/12*** |
| | ***A 01N 43/80*** |
| EP 2331538* | ***C 07D 417/14*** |
| | ***A 61K 31/4709*** |
| | ***A 61P 31/12*** |
| EP 2331545* | ***C 07D 487/04*** |
| EP 2331546* | ***C 07D 487/04*** |
| | ***A 61K 31/5025*** |
| | ***A 61P 25/00*** |
| | ***A 61P 35/00*** |
| EP 2331547* | ***C 07D 487/04*** |
| | ***A 61K 31/519*** |
| | ***A 61P 35/00*** |
| EP 2331548* | ***C 07D 491/048*** |
| | ***A 61K 31/496*** |
| | ***A 61P 19/00*** |
| EP 2331549* | ***C 07D 493/18*** |
| | ***C 07H 19/01*** |
| EP 2331550* | ***C 07D 493/18*** |
| | ***C 07H 19/01*** |
| EP 2331564* | ***C 07K 7/08*** |
| | ***C 07K 14/00*** |
| | ***A 61K 38/10*** |
| | ***A 61K 38/16*** |
| | ***A 61P 31/00*** |
| EP 2331568* | ***C 07K 14/52*** |
| | ***A 61M 1/36*** |
| | ***B 01J 20/32*** |
| EP 2331569* | ***C 07K 14/755*** |
| | ***C 07K 14/745*** |
| | ***A 61K 38/00*** |
| EP 2331571* | ***C 07K 16/00*** |
| EP 2331573* | ***C 07K 16/10*** |
| | ***A 61K 39/395*** |
| EP 2331587* | ***C 08F 8/12*** |
| | ***C 08F 218/08*** |
| | ***A 61K 9/00*** |

| Broj objave evropske prijave patenta | (51) |
|---|---|
| EP 2331629* | ***C 08L 3/02*** |
| | ***A 61K 47/36*** |
| | ***A 61K 9/14*** |
| | ***C 08J 3/12*** |
| | ***C 08J 3/20*** |
| | ***C 12N 11/10*** |
| | ***C 12N 1/20*** |
| EP 2331678* | ***C 12N 5/06*** |
| | ***C 12N 5/10*** |
| EP 2331690* | ***C 12N 15/11*** |
| EP 2331694* | ***C 12N 15/82*** |
| | ***C 12N 15/55*** |
| | ***C 12N 9/10*** |
| | ***A 01H 5/00*** |
| | ***A 01H 5/10*** |
| EP 2331744* | ***D 06N 7/00*** |
| | ***A 47G 27/04*** |
| EP 2331753* | ***E 02B 3/16*** |
| | ***E 02B 5/02*** |
| EP 2331760* | ***E 04B 1/68*** |
| | ***F 16J 15/02*** |
| | ***E 06B 3/62*** |
| EP 2331779* | ***E 05B 27/04*** |
| | ***E 05B 15/12*** |
| | ***E 05B 19/02*** |
| | ***E 05B 27/10*** |
| EP 2331872* | ***F 21V 19/04*** |
| | ***F 21V 17/06*** |
| EP 2331875* | ***F 23J 15/04*** |
| | ***F 23J 15/06*** |
| | ***B 01D 47/06*** |
| | ***B 01D 53/78*** |
| EP 2331944* | ***G 01N 23/04*** |
| | ***G 01F 23/288*** |
| | ***G 01N 23/10*** |
| EP 2331955* | ***G 01N 33/48*** |
| | ***G 01N 24/08*** |
| | ***G 01N 33/483*** |
| | ***G 01R 33/465*** |
| EP 2331965* | ***G 01N 33/68*** |
| EP 2332082* | ***G 06F 19/00*** |
| EP 2332138* | ***G 09G 3/32*** |
| EP 2332218* | ***H 01R 13/631*** |
| | ***H 01R 13/633*** |
| EP 2332232* | ***H 02K 1/16*** |
| | ***H 02K 1/18*** |
| | ***H 02K 1/20*** |

| Broj objave evropske prijave patenta | (51) |
|---|---|
| EP 2332535 | ***A 61K 31/4184*** |
| | ***A 61K 31/4422*** |
| | ***A 61K 47/12*** |
| | ***A 61K 47/22*** |
| | ***A 61P 1/00*** |
| | ***A 61P 1/02*** |
| | ***A 61P 1/04*** |
| | ***A 61P 1/14*** |
| | ***A 61P 3/00*** |
| | ***A 61P 3/04*** |
| | ***A 61P 3/06*** |
| | ***A 61P 3/12*** |
| | ***A 61P 5/50*** |
| | ***A 61P 7/00*** |
| | ***A 61P 7/02*** |
| | ***A 61P 7/10*** |
| | ***A 61P 9/00*** |
| | ***A 61P 9/06*** |
| | ***A 61P 9/08*** |
| | ***A 61P 9/10*** |
| EP 2332927 | ***C 07D 261/04*** |
| | ***A 01N 43/80*** |
| | ***A 01P 7/02*** |
| | ***A 01P 7/04*** |
| | ***C 07D 413/04*** |
| | ***C 07D 413/06*** |
| | ***C 07D 413/10*** |
| EP 2332943 | ***C 07D 513/04*** |
| | ***A 61K 31/542*** |
| | ***A 61P 25/00*** |
| | ***A 61P 25/28*** |
| | ***A 61P 43/00*** |
| EP 2333046 | ***C 12N 1/20*** |
| | ***C 05F 17/00*** |
| | ***C 05G 5/00*** |
| EP 2333056 | ***C 12N 9/96*** |
| | ***A 23C 19/032*** |
| | ***C 12N 9/52*** |
| | ***C 12N 9/58*** |
| | ***C 12N 9/64*** |
| EP 2333057 | ***C 12N 11/00*** |
| | ***A 01G 1/00*** |
| | ***A 01G 31/00*** |
| | ***B 09B 3/00*** |
| | ***C 05F 1/00*** |
| | ***C 05F 3/00*** |
| | ***C 05F 5/00*** |
| | ***C 05F 7/00*** |
| | ***C 05F 9/00*** |
| | ***C 05F 17/00*** |
| EP 2333609 | ***G 03F 7/037*** |
| | ***C 09J 7/00*** |
| | ***C 09J 179/08*** |
| | ***G 03F 7/004*** |
| EP 2333715 | ***G 06Q 50/00*** |
| | ***G 06K 17/00*** |
| EP 2334166* | ***A 01H 5/00*** |
| EP 2334174* | ***A 01N 33/18*** |
| | ***A 01N 43/50*** |
| | ***A 01N 25/04*** |
| | ***A 01P 13/00*** |

| Broj objave evropske prijave patenta | (51) |
|---|---|
| EP 2334178* | ***A 01N 37/36*** |
| EP 2334182* | ***A 01N 43/46*** |
| EP 2334185* | ***A 01N 43/78*** |
| | ***A 61K 31/425*** |
| EP 2334186* | ***A 01N 49/00*** |
| | ***A 01N 55/00*** |
| | ***A 01P 7/00*** |
| EP 2334190* | ***A 23C 9/00*** |
| | ***A 23C 9/14*** |
| | ***A 23C 9/146*** |
| | ***A 23C 9/142*** |
| EP 2334203* | ***A 23L 1/236*** |
| EP 2334299* | ***A 61K 31/437*** |
| | ***A 61K 45/06*** |
| EP 2334302* | ***A 61K 31/5415*** |
| | ***A 61K 9/50*** |
| EP 2334305* | ***A 61K 31/765*** |
| EP 2334313* | ***A 61K 36/534*** |
| | ***A 61K 36/38*** |
| | ***A 61P 29/00*** |
| | ***A 61P 17/00*** |
| EP 2334316* | ***A 61K 38/00*** |
| EP 2334319* | ***A 61K 38/18*** |
| EP 2334326* | ***A 61K 39/00*** |
| | ***C 07K 7/06*** |
| | ***A 61K 38/08*** |
| | ***A 61P 25/00*** |
| EP 2334333* | ***A 61K 47/48*** |
| | ***C 07K 14/47*** |
| | ***A 61P 31/04*** |
| EP 2334334* | ***A 61K 47/48*** |
| EP 2334335* | ***A 61K 47/48*** |
| | ***C 07K 14/575*** |
| EP 2334336* | ***A 61K 47/48*** |
| | ***C 07K 14/575*** |
| EP 2334337* | ***A 61K 47/48*** |
| | ***C 07K 7/06*** |
| EP 2334338* | ***A 61K 47/48*** |
| | ***C 07K 14/62*** |
| EP 2334340* | ***A 61L 2/10*** |
| EP 2334367* | ***A 61M 29/00*** |
| EP 2334561* | ***B 65B 31/08*** |
| | ***B 65B 55/02*** |
| | ***B 65D 81/20*** |
| EP 2334565* | ***B 65D 1/34*** |
| | ***B 65D 21/02*** |
| | ***G 01N 23/02*** |
| | ***G 01N 23/04*** |
| | ***G 01N 23/083*** |
| | ***G 01N 23/10*** |
| EP 2334587* | ***B 66F 15/00*** |
| | ***A 01B 1/02*** |
| | ***B 65D 1/02*** |
| EP 2334614* | ***C 04B 18/02*** |
| | ***C 04B 28/04*** |
| | ***C 04B 28/06*** |
| | ***C 04B 28/14*** |
| | ***C 04B 28/16*** |
| EP 2334621* | ***C 07B 59/00*** |
| | ***C 07C 237/06*** |

| Broj objave evropske prijave patenta | (51) |
|---|---|
| EP 2334646* | ***C 07D 231/40*** |
| | ***C 07D 403/12*** |
| | ***C 07D 405/12*** |
| | ***C 07D 405/14*** |
| | ***C 07D 409/14*** |
| | ***C 07D 413/12*** |
| | ***C 07D 413/14*** |
| EP 2334668* | ***C 07D 405/14*** |
| | ***A 61K 31/41*** |
| | ***A 61P 9/12*** |
| EP 2334670* | ***C 07D 417/04*** |
| | ***C 07D 285/135*** |
| | ***A 61K 31/433*** |
| | ***A 61P 29/00*** |
| EP 2334673* | ***C 07D 471/04*** |
| | ***A 61K 31/444*** |
| | ***A 61P 29/00*** |
| EP 2334674* | ***C 07D 471/04*** |
| | ***A 61K 31/5025*** |
| | ***A 61P 29/00*** |
| | ***A 61P 31/00*** |
| | ***A 61P 17/00*** |
| EP 2334677* | ***C 07D 471/04*** |
| | ***A 61K 31/47*** |
| EP 2334684* | ***C 07D 487/04*** |
| | ***A 61K 31/519*** |
| | ***A 61P 25/00*** |
| | ***A 61P 3/00*** |
| EP 2334687* | ***C 07D 493/10*** |
| | ***C 07H 15/18*** |
| | ***A 61K 31/357*** |
| | ***A 61P 3/10*** |
| EP 2334695* | ***C 07K 14/435*** |
| | ***C 07H 21/00*** |
| | ***A 61K 38/00*** |
| EP 2334705* | ***C 07K 16/46*** |
| | ***C 07K 16/18*** |
| | ***C 07K 16/28*** |
| | ***C 07K 16/24*** |
| EP 2334732* | ***C 08L 23/00*** |
| | ***C 08L 23/04*** |
| EP 2334744* | ***C 09J 7/00*** |
| | ***C 09J 151/06*** |
| | ***C 09J 123/26*** |
| | ***B 32B 21/08*** |
| EP 2334762* | ***C 10J 3/22*** |
| | ***F 23G 5/24*** |
| EP 2334795* | ***C 12N 15/82*** |
| EP 2334797* | ***C 12N 15/82*** |
| | ***A 01H 5/00*** |
| EP 2334836* | ***C 22C 1/05*** |
| EP 2334873* | ***E 01C 11/22*** |
| | ***E 01C 7/18*** |
| | ***E 01C 7/26*** |
| | ***C 08L 95/00*** |
| EP 2334898* | ***E 21B 43/00*** |
| | ***E 21B 43/24*** |
| | ***E 21B 43/243*** |
| | ***E 21B 41/00*** |
| | ***C 09K 8/00*** |
| | ***C 10G 47/00*** |

| Broj objave evropske prijave patenta | (51) |
|---|---|
| EP 2334993* | ***F 24J 3/08*** |
| | ***E 21B 10/00*** |
| | ***F 03G 4/00*** |
| | ***F 16L 1/028*** |
| | ***F 16L 1/032*** |
| | ***F 25B 27/00*** |
| | ***F 25B 41/00*** |
| EP 2335020* | ***G 01B 13/12*** |
| | ***G 01B 21/14*** |
| | ***G 01B 21/30*** |
| EP 2335107* | ***G 02B 6/38*** |
| | ***H 01R 13/66*** |
| | ***G 06F 1/26*** |
| | ***G 06F 1/16*** |
| EP 2335462* | ***H 05K 7/20*** |
| | ***H 02B 1/56*** |
| EP 2335675 | ***A 61K 8/04*** |
| | ***A 61K 8/06*** |
| | ***A 61K 8/81*** |
| EP 2335701 | ***A 61K 31/4168*** |
| | ***A 61K 31/4178*** |
| | ***C 07D 233/88*** |
| | ***C 07D 239/22*** |
| | ***C 07D 271/06*** |
| | ***C 07D 401/04*** |
| | ***C 07D 401/10*** |
| | ***C 07D 401/12*** |
| | ***C 07D 401/14*** |
| | ***C 07D 403/06*** |
| | ***C 07D 403/10*** |
| | ***C 07D 403/14*** |
| | ***C 07D 405/06*** |
| | ***C 07D 405/14*** |
| | ***C 07D 407/14*** |
| | ***C 07D 409/06*** |
| | ***C 07D 413/12*** |
| | ***C 07D 413/14*** |
| | ***C 07D 417/12*** |
| | ***A 61P 25/00*** |
| | ***A 61P 31/00*** |
| EP 2335736 | ***A 61K 47/48*** |
| | ***A 61K 38/09*** |
| | ***A 61P 35/00*** |
| | ***A 61P 43/00*** |
| | ***A 61P 15/00*** |
| | ***A 61K 39/00*** |
| EP 2335915 | ***B 30B 11/02*** |
| | ***A 61J 3/10*** |
| EP 2336269 | ***C 10G 2/00*** |
| EP 2336270 | ***C 10G 2/00*** |
| EP 2336271 | ***C 10G 2/00*** |
| EP 2336601 | ***F 16H 37/06*** |
| | ***F 16H 48/10*** |
| EP 2336779 | ***G 01N 33/574*** |
| EP 2337444* | ***A 01K 11/00*** |
| EP 2337449* | ***A 01N 1/02*** |
| EP 2337459* | ***A 23L 1/212*** |

| Broj objave evropske prijave patenta | (51) |
|---|---|
| EP 2337460* | ***A 23L 1/24*** |
| | ***A 23D 7/00*** |
| | ***A 23D 7/04*** |
| | ***A 23J 1/14*** |
| | ***A 23L 1/035*** |
| | ***B 01F 17/30*** |
| EP 2337488* | ***A 61B 1/018*** |
| | ***A 61B 17/00*** |
| EP 2337505* | ***A 61B 17/06*** |
| EP 2337530* | ***A 61F 5/56*** |
| EP 2337559* | ***A 61K 31/343*** |
| | ***A 61K 31/495*** |
| | ***A 61P 9/06*** |
| EP 2337580* | ***A 61K 38/37*** |
| EP 2337583* | ***A 61K 45/06*** |
| EP 2337585* | ***A 61K 47/48*** |
| | ***C 07K 14/605*** |
| EP 2337681* | ***B 32B 15/10*** |
| | ***B 32B 15/085*** |
| | ***B 32B 21/08*** |
| | ***B 27D 5/00*** |
| EP 2337762* | ***B 67D 7/84*** |
| | ***B 67D 1/08*** |
| EP 2337777* | ***C 07C 263/20*** |
| | ***B 01D 3/00*** |
| | ***C 07C 265/04*** |
| | ***C 07C 265/14*** |
| | ***B 01D 3/14*** |
| EP 2337779* | ***C 07D 215/58*** |
| | ***C 07D 215/227*** |
| | ***A 61K 31/47*** |
| | ***A 61K 31/198*** |
| | ***A 61P 37/08*** |
| EP 2337781* | ***C 07D 403/14*** |
| | ***C 07D 401/14*** |
| | ***C 07D 417/14*** |
| | ***A 61K 31/4025*** |
| | ***A 61K 31/4178*** |
| | ***A 61K 31/4184*** |
| | ***A 61K 31/4196*** |
| | ***A 61K 31/4439*** |
| | ***A 61P 31/14*** |
| EP 2337790* | ***C 07K 14/33*** |
| EP 2337840* | ***C 11D 17/06*** |
| | ***C 11D 3/37*** |
| EP 2337843* | ***C 12N 1/12*** |
| | ***C 12M 1/24*** |
| EP 2337846* | ***C 12N 1/36*** |
| | ***C 12P 21/00*** |
| EP 2337898* | ***E 01C 13/08*** |
| EP 2337971* | ***F 16H 3/72*** |
| | ***F 16H 3/64*** |
| EP 2338005* | ***F 24D 13/02*** |
| | ***E 04C 2/52*** |
| | ***F 28F 21/04*** |
| EP 2338016* | ***F 26B 5/06*** |
| EP 2338902 | ***C 07K 14/26*** |
| | ***C 07K 16/12*** |
| | ***A 61K 39/395*** |
| | ***A 61P 31/04*** |

| Broj objave evropske prijave patenta | (51) |
|---|---|
| EP 2338907 | ***C 07K 14/47*** |
| | ***A 61K 39/00*** |
| EP 2338919 | ***C 08F 8/42*** |
| | ***C 08F 4/48*** |
| | ***C 08F 36/04*** |
| | ***C 08K 3/04*** |
| | ***C 08K 3/36*** |
| | ***C 08L 15/00*** |
| EP 2339202 | ***F 16F 7/14*** |
| EP 2339507 | ***G 06K 9/00*** |
| EP 2339695 | ***H 01R 11/01*** |
| | ***C 09J 9/02*** |
| | ***C 09J 11/08*** |
| | ***C 09J 201/00*** |
| | ***H 01B 1/22*** |
| | ***H 05K 1/14*** |
| | ***H 05K 3/36*** |
| EP 2339703 | ***H 01R 39/64*** |
| EP 2339922* | ***A 23B 7/153*** |
| | ***A 23B 7/16*** |
| | ***A 23L 1/00*** |
| | ***A 23L 1/212*** |
| | ***A 23L 3/34*** |
| | ***A 23L 3/3454*** |
| | ***A 23N 15/00*** |
| | ***A 23P 1/08*** |
| | ***A 23N 15/06*** |
| | ***B 05D 1/30*** |
| EP 2339982* | ***A 61B 19/02*** |
| EP 2340002* | ***A 61F 13/02*** |
| EP 2340016* | ***A 61K 9/06*** |
| | ***A 61K 47/34*** |
| | ***A 61K 31/205*** |
| | ***A 61P 17/00*** |
| EP 2340021* | ***A 61K 31/40*** |
| | ***A 61K 31/4025*** |
| | ***A 61P 35/00*** |
| | ***C 07D 207/16*** |
| | ***C 07D 401/06*** |
| | ***C 07D 401/12*** |
| | ***C 07D 401/14*** |
| | ***C 07D 403/06*** |
| | ***C 07D 403/12*** |
| | ***C 07D 405/06*** |
| | ***C 07D 405/12*** |
| | ***C 07D 409/04*** |
| | ***C 07D 409/12*** |
| | ***C 07D 413/12*** |
| | ***C 07D 417/12*** |
| EP 2340026* | ***A 61K 35/14*** |
| | ***A 61P 3/10*** |
| | ***A 61P 25/02*** |
| EP 2340042* | ***A 61K 45/06*** |
| | ***A 61P 35/00*** |
| | ***C 12Q 1/34*** |
| EP 2340044* | ***A 61K 47/48*** |
| | ***A 61P 25/04*** |
| | ***A 61P 25/36*** |
| EP 2340045* | ***A 61K 47/48*** |
| | ***C 07K 7/08*** |
| | ***A 61P 31/04*** |

| Broj objave evropske prijave patenta | (51) |
|---|---|
| EP 2340046* | ***A 61K 47/48*** |
| | ***C 07K 14/435*** |
| | ***A 61P 25/04*** |
| EP 2340047* | ***A 61K 47/48*** |
| | ***C 07K 14/47*** |
| EP 2340048* | ***A 61K 47/48*** |
| | ***C 07K 5/10*** |
| | ***C 07K 7/02*** |
| EP 2340050* | ***A 61K 47/48*** |
| | ***C 07K 14/61*** |
| EP 2340161* | ***B 32B 3/28*** |
| | ***B 32B 29/08*** |
| EP 2340242* | ***C 07C 311/33*** |
| | ***C 07C 311/08*** |
| | ***C 07C 311/36*** |
| | ***C 07C 237/20*** |
| | ***A 61K 31/18*** |
| | ***A 61K 31/167*** |
| | ***A 61P 27/02*** |
| EP 2340246* | ***C 07D 319/20*** |
| EP 2340256* | ***C 07H 21/00*** |
| | ***C 40B 40/08*** |
| EP 2340440* | ***G 01R 21/133*** |
| | ***G 01R 22/06*** |
| | ***H 02J 13/00*** |
| EP 2340600* | ***H 02K 21/46*** |
| | ***H 02K 1/27*** |
| EP 2341053 | ***C 07D 505/24*** |
| | ***A 61K 31/5365*** |
| | ***A 61K 31/546*** |
| | ***A 61K 31/55*** |
| | ***A 61P 31/04*** |
| | ***C 07D 501/46*** |
| | ***C 07D 519/06*** |
| EP 2341106 | ***C 08L 101/10*** |
| | ***C 08K 5/09*** |
| | ***C 08K 5/17*** |
| | ***C 08K 5/521*** |
| | ***C 09J 201/10*** |
| | ***C 09K 3/10*** |
| EP 2341353 | ***G 01R 31/28*** |
| EP 2341528 | ***H 01L 21/329*** |
| | ***H 01L 29/06*** |
| | ***H 01L 29/32*** |
| | ***H 01L 29/861*** |
| EP 2341778* | ***A 01N 57/20*** |
| | ***A 01N 25/30*** |
| | ***A 01N 59/02*** |
| | ***A 01P 13/00*** |
| EP 2341794* | ***A 45D 1/04*** |
| | ***A 45D 2/38*** |
| | ***A 45D 1/12*** |
| EP 2341815* | ***A 61B 1/005*** |
| | ***A 61B 1/313*** |
| | ***A 61B 17/34*** |
| EP 2341829* | ***A 61B 5/157*** |
| EP 2341842* | ***A 61B 17/064*** |
| | ***A 61B 17/122*** |
| | ***A 61B 17/128*** |
| | ***A 61B 17/00*** |
| EP 2341867* | ***A 61F 2/06*** |

| Broj objave evropske prijave patenta | (51) |
|---|---|
| EP 2341895* | ***A 61K 9/06*** |
| | ***A 61K 9/00*** |
| | ***A 61K 31/728*** |
| EP 2341898* | ***A 61K 9/20*** |
| | ***A 61K 9/48*** |
| | ***A 61K 38/00*** |
| | ***A 61K 47/02*** |
| | ***A 61K 47/18*** |
| EP 2341906* | ***A 61K 31/47*** |
| | ***A 61K 31/443*** |
| | ***A 61K 31/403*** |
| | ***A 61K 31/506*** |
| | ***A 61K 31/519*** |
| | ***A 61K 35/12*** |
| | ***A 61P 35/00*** |
| EP 2341911* | ***A 61K 31/519*** |
| | ***A 61K 31/407*** |
| | ***A 61P 35/00*** |
| EP 2341927* | ***A 61K 39/00*** |
| | ***A 61P 35/00*** |
| | ***A 61K 38/08*** |
| | ***A 61K 38/16*** |
| EP 2341933* | ***A 61K 39/395*** |
| | ***C 07K 16/46*** |
| EP 2341934* | ***A 61K 39/395*** |
| | ***A 61P 17/00*** |
| | ***A 61P 19/02*** |
| | ***A 61P 37/00*** |
| EP 2341942* | ***A 61K 47/48*** |
| EP 2341963* | ***A 61M 5/50*** |
| | ***A 61M 39/20*** |
| EP 2341972* | ***A 61M 25/00*** |
| | ***A 61M 27/00*** |
| EP 2342077* | ***B 32B 21/08*** |
| | ***B 32B 21/06*** |
| | ***B 32B 27/10*** |
| | ***B 32B 27/32*** |
| EP 2342135* | ***B 65B 57/02*** |
| | ***B 65B 13/04*** |
| | ***B 65B 57/08*** |
| EP 2342164* | ***C 02F 1/66*** |
| | ***C 02F 1/72*** |
| | ***C 02F 9/00*** |
| | ***C 02F 11/06*** |
| | ***C 02F 101/20*** |
| | ***C 02F 101/30*** |
| EP 2342176* | ***C 07C 263/20*** |
| | ***B 01D 3/00*** |
| | ***C 07C 265/04*** |
| | ***B 01D 3/14*** |
| EP 2342182* | ***C 07D 217/26*** |
| | ***C 07D 401/06*** |
| | ***C 07D 403/06*** |
| | ***C 07D 407/04*** |
| | ***A 61K 31/472*** |
| | ***A 61P 25/18*** |
| EP 2342188* | ***C 07D 311/22*** |
| | ***A 61K 31/353*** |
| | ***A 61P 3/10*** |

| Broj objave evropske prijave patenta | (51) |
|---|---|
| EP 2342194* | ***C 07D 401/12*** |
| | ***C 07D 403/12*** |
| | ***A 61K 31/4178*** |
| EP 2342200* | ***C 07D 413/12*** |
| | ***C 07D 261/14*** |
| | ***C 07D 413/14*** |
| | ***C 07D 249/14*** |
| | ***C 07D 413/04*** |
| | ***C 07D 405/12*** |
| | ***A 61K 31/42*** |
| | ***A 61P 29/00*** |
| | ***A 61P 37/00*** |
| | ***A 61P 35/00*** |
| | ***A 61P 1/00*** |
| | ***A 61K 31/4196*** |
| EP 2342203* | ***C 07D 471/04*** |
| | ***A 61K 31/444*** |
| | ***A 61K 31/437*** |
| | ***A 61P 3/00*** |
| | ***A 61P 9/00*** |
| | ***A 61P 11/00*** |
| | ***A 61P 17/00*** |
| | ***A 61P 19/08*** |
| | ***A 61P 25/28*** |
| | ***A 61P 27/02*** |
| | ***A 61P 27/16*** |
| EP 2342205* | ***C 07D 487/04*** |
| | ***A 61K 31/407*** |
| | ***A 61K 31/437*** |
| | ***A 61P 29/00*** |
| | ***A 61P 31/12*** |
| | ***A 61P 37/00*** |
| EP 2342220* | ***C 07K 14/47*** |
| | ***A 61K 39/00*** |
| | ***A 61K 39/395*** |
| | ***A 61P 37/04*** |
| | ***C 07K 14/00*** |
| | ***C 07K 16/00*** |
| | ***C 07K 16/18*** |
| | ***C 07K 7/06*** |
| | ***G 01N 33/53*** |
| | ***G 06F 19/00*** |
| | ***C 04B 30/02*** |
| | ***G 01N 33/68*** |
| EP 2342223* | ***C 07K 14/505*** |
| | ***C 12N 15/11*** |
| | ***C 12N 15/16*** |
| | ***C 12N 5/10*** |
| | ***C 12P 21/02*** |
| | ***A 61P 7/06*** |
| EP 2342227* | ***C 07K 16/28*** |
| | ***C 07K 16/46*** |
| EP 2342228* | ***C 07K 16/28*** |
| | ***A 61K 39/395*** |
| | ***A 61P 37/06*** |
| EP 2342231* | ***C 07K 16/28*** |
| | ***C 07K 16/46*** |
| EP 2342233* | ***C 07K 16/28*** |
| EP 2342234* | ***C 07K 16/30*** |

| Broj objave evropske prijave patenta | (51) |
|---|---|
| EP 2342292* | ***C 09D 5/33*** |
| | ***C 09D 7/12*** |
| | ***B 05D 5/06*** |
| | ***E 01F 9/04*** |
| EP 2342331* | ***C 12N 9/88*** |
| | ***C 12N 15/60*** |
| | ***C 12N 15/82*** |
| | ***A 01H 5/00*** |
| | ***A 01H 5/10*** |
| EP 2342334* | ***C 12N 15/09*** |
| EP 2342344* | ***C 12N 15/63*** |
| | ***C 12N 15/82*** |
| | ***A 01H 1/00*** |
| | ***C 12Q 1/68*** |
| EP 2342346* | ***C 12P 3/00*** |
| | ***C 12P 5/02*** |
| | ***C 12P 7/06*** |
| | ***C 12P 7/54*** |
| EP 2342394* | ***E 04C 2/04*** |
| EP 2342562* | ***G 01N 33/53*** |
| EP 2342615* | ***G 06F 3/01*** |
| | ***G 06F 3/041*** |
| EP 2342663* | ***G 06F 17/30*** |
| EP 2342791* | ***H 02H 7/18*** |
| | ***H 02J 7/04*** |
| | ***H 01M 10/44*** |
| | ***G 01K 13/00*** |
| EP 2342868* | ***H 04L 12/28*** |
| | ***H 04L 12/46*** |
| EP 2343069 | ***A 61K 31/4168*** |
| | ***A 61K 31/4178*** |
| | ***C 07D 233/88*** |
| | ***C 07D 239/22*** |
| | ***C 07D 271/06*** |
| | ***C 07D 401/04*** |
| | ***C 07D 401/10*** |
| | ***C 07D 401/12*** |
| | ***C 07D 401/14*** |
| | ***C 07D 403/06*** |
| | ***C 07D 403/10*** |
| | ***C 07D 403/14*** |
| | ***C 07D 405/06*** |
| | ***C 07D 405/14*** |
| | ***C 07D 407/14*** |
| | ***C 07D 409/06*** |
| | ***C 07D 413/12*** |
| | ***C 07D 413/14*** |
| | ***C 07D 417/12*** |
| | ***A 61P 25/00*** |
| | ***A 61P 31/00*** |
| EP 2343070 | ***A 61K 31/4412*** |
| | ***A 61P 11/00*** |
| EP 2343071 | ***A 61K 31/485*** |
| | ***A 61K 9/22*** |
| | ***A 61K 9/32*** |
| EP 2343283 | ***C 07D 239/52*** |
| | ***A 01N 43/54*** |
| | ***A 01P 13/02*** |

| Broj objave evropske prijave patenta | (51) |
|---|---|
| EP 2343370 | ***C 12N 9/64*** |
| | ***A 61K 38/43*** |
| | ***A 61K 9/19*** |
| | ***A 61K 9/12*** |
| | ***A 61K 9/70*** |
| | ***A 61P 7/04*** |
| EP 2343419 | ***E 04F 13/08*** |
| | ***E 04F 21/18*** |
| | ***E 04F 21/22*** |
| EP 2343957 | ***H 05K 3/32*** |
| | ***H 05K 3/40*** |

ИНДЕКС ОБЈАВЉЕНИХ ЗАХТЕВА ЗА ПРОШИРЕЊЕ ЕВРОПСКИХ ПРИЈАВА ПАТЕНАТА ПРЕМА ПОДНОСИОЦИМА ПРИЈАВА

| (71) | (51) | Broj objave evropske prijave patenta | (54) |
|---|---|---|---|
| 300K Enterprises Pty Ltd, AU | ***F 21V 19/04***<br>***F 21V 17/06*** | EP 2331872* | COUPLING AND METHOD FOR USE WITH A LAMP FITTING |
| AALBORG PORTLAND A/S, DK | ***C 04B 7/02***<br>***C 04B 28/00*** | EP 2253600 | Portland limestone calcined clay cement |
| ABB Technology AG, CH | ***H 01L 21/329***<br>***H 01L 29/06***<br>***H 01L 29/32***<br>***H 01L 29/861*** | EP 2341528 | Power Semiconductor Device and its manufacturing method |
| Abbott Diabetes Care Inc., US | ***A 61B 5/157*** | EP 2341829* | INTEGRATED LANCET AND ANALYTE TESTING APPARATUS |
| ABBOTT LABORATORIES, US | ***A 61K 31/41***<br>***C 07D 257/04*** | EP 2068869* | NOVEL IMIDAZOTHIAZOLES AND IMIDAZOXAZOLES |
| ABBOTT LABORATORIES, US | ***C 07D 471/18***<br>***A 61K 31/439***<br>***A 61P 25/00*** | EP 2069346* | ACETAMIDE AND CARBOXAMIDE DERIVATIVES OF AZAADAMANTANE AND METHODS OF USE THEREOF |
| Abbott Laboratories, US | ***C 07D 231/40***<br>***C 07D 403/12***<br>***C 07D 405/12***<br>***C 07D 405/14***<br>***C 07D 409/14***<br>***C 07D 413/12***<br>***C 07D 413/14*** | EP 2334646* | SUBSTITUTED BENZAMIDES AS CANNABINOID RECEPTOR LIGANDS |
| Abbott Laboratories, US | ***C 07D 403/14***<br>***C 07D 401/14***<br>***C 07D 417/14***<br>***A 61K 31/4025***<br>***A 61K 31/4178***<br>***A 61K 31/4184***<br>***A 61K 31/4196***<br>***A 61K 31/4439***<br>***A 61P 31/14*** | EP 2337781* | ANTI-VIRAL COMPOUNDS TO TREAT HCV INFECTION |
| Abbott Laboratories, US | ***C 07H 21/00***<br>***C 40B 40/08*** | EP 2340256* | IMPROVED ANTIBODY LIBRARIES |
| Abbott Laboratories, US | ***G 01N 33/53*** | EP 2342562* | IMPROVED METHOD OF RNA DISPLAY |
| ABN Pipe Systems, ES | ***F 16L 11/08*** | EP 2261542 | Pipe for water-supply systems |
| Acone, IT | ***G 09F 3/00*** | EP 2324470* | BOTTLE SHIELDS |
| Acone,IT; | ***G 09F 3/00*** | EP 2324470* | BOTTLE SHIELDS |
| Acucela, US | ***C 07C 311/33***<br>***C 07C 311/08***<br>***C 07C 311/36***<br>***C 07C 237/20***<br>***A 61K 31/18***<br>***A 61K 31/167***<br>***A 61P 27/02*** | EP 2340242* | COMPOUNDS FOR TREATING OPHTHALMIC DISEASES AND DISORDERS |
| ADC GmbH, DE | ***H 05K 7/20***<br>***H 02B 1/56*** | EP 2335462* | COOLER ARRANGEMENT FOR AN ELECTRICAL OR EQUIPMENT CABINET HAVING AIR-TO-AIR HEAT EXCHANGER CASSETTES |
| Advance Invest, FR | ***B 01L 3/00***<br>***B 01L 3/14***<br>***A 61B 10/00***<br>***G 01N 1/40*** | EP 2286919 | Filtration device for analyses |
| Advenchen Laboratories, US | ***C 07D 401/02***<br>***A 61K 31/47***<br>***C 07D 403/02***<br>***A 61K 31/517*** | EP 2125777* | SPIRO SUBSTITUTED COMPOUNDS AS ANGIOGENESIS INHIBITORS |

| (71) | (51) | Broj objave evropske prijave patenta | (54) |
|---|---|---|---|
| Aerodyne Research, US | ***H 03L 7/18***<br>***G 01R 25/00*** | EP 2329599* | SYSTEM AND METHOD FOR PRECISION PHASE SHIFT MEASUREMENT |
| Affiris AG, AT | ***A 61K 39/00***<br>***C 07K 7/06***<br>***A 61K 38/08***<br>***A 61P 25/00*** | EP 2334326* | MIMOTOPES OF ALPHA-SYNUCLEIN AND VACCINES THEREOF FOR THE TREATMENT OF NEURODEGENERATIVE DISORDERS |
| Ajinomoto Co., JP | ***A 61K 31/198***<br>***A 23L 1/22***<br>***A 23L 1/305***<br>***A 61K 9/10***<br>***A 61K 9/14***<br>***A 61K 9/20***<br>***A 61K 9/48***<br>***A 61K 47/08***<br>***A 61K 47/12***<br>***A 61K 47/36***<br>***A 61K 47/38***<br>***A 61P 1/14***<br>***A 61P 3/02***<br>***A 61P 17/14***<br>***A 61P 17/16***<br>***A 61P 21/00***<br>***A 61P 37/04***<br>***A 61P 43/00*** | EP 2324826 | HYDROPHILIC AMINO ACID-CONTAINING PREPARATION HAVING IMPROVED TASTE |
| Allylix, US | ***C 12N 1/00***<br>***C 12N 1/19*** | EP 2326707* | METHOD FOR PRODUCTION OF ISOPRENOIDS |
| Almirall S.A., ES | ***C 07D 417/04***<br>***C 07D 285/135***<br>***A 61K 31/433***<br>***A 61P 29/00*** | EP 2334670* | NEW 2-AMIDOTHIADIAZOLE DERIVATIVES |
| Alnylam Europe AG.,US; | ***C 12N 15/11*** | EP 2331690* | COMPOSITIONS AND METHODS FOR INHIBITING EXPRESSION OF MUTANT EGFR GENE |
| Alnylam Pharmaceuticals Inc.,US; | ***C 12N 15/11*** | EP 2331690* | COMPOSITIONS AND METHODS FOR INHIBITING EXPRESSION OF MUTANT EGFR GENE |
| Alpao, FR | ***G 02B 26/08***<br>***G 02B 26/06*** | EP 2324387* | DEFORMABLE MIRROR WITH FORCE ACTUATORS AND DISTRIBUTED STIFFNESS |
| Altreconserve Srl, IT | ***A 23L 1/212*** | EP 2337459* | PROCESS FOR PRODUCING VEGETABLE OR FRUIT PULP OR PUREE PACKAGING |
| Ambrx, US | ***C 12N 1/36***<br>***C 12P 21/00*** | EP 2337846* | NON-NATURAL AMINO ACID REPLICATION-DEPENDENT MICROORGANISMS AND VACCINES |
| Ambrx,US; | ***C 07K 14/505***<br>***C 12N 15/11***<br>***C 12N 15/16***<br>***C 12N 5/10***<br>***C 12P 21/02***<br>***A 61P 7/06*** | EP 2342223* | MODIFIED ANIMAL ERYTHROPOIETIN POLYPEPTIDES AND THEIR USES |
| Amgen Inc., US | ***C 07D 498/10***<br>***C 07D 513/10***<br>***A 61K 31/424***<br>***A 61K 31/429***<br>***A 61P 25/28*** | EP 2328903* | SPIRO-TETRACYCLIC RING COMPOUNDS AS BETASECRETASE MODULATORS AND METHODS OF USE |
| Amgen Inc.,US; | ***C 07D 471/04***<br>***A 61K 31/444***<br>***A 61P 29/00*** | EP 2334673* | PYRIDO[3,2-d]PYRIDAZINE-2(1H)-ONE COMPOUNDS AS P38 MODULATORS AND METHODS OF USE THEREOF |

| (71) | (51) | Broj objave evropske prijave patenta | (54) |
|---|---|---|---|
| Amgen, US | ***A 61K 9/19***<br>***A 61K 47/02***<br>***A 61K 47/26***<br>***A 61K 9/00***<br>***A 61K 39/395*** | EP 2081553* | STABLE ANTIBODY FORMULATIONS |
| Amgen, US | ***C 07D 471/04***<br>***A 61K 31/5025***<br>***A 61P 29/00***<br>***A 61P 31/00***<br>***A 61P 17/00*** | EP 2334674* | PYRIDAZINO- PYRIDINONE COMPOUNDS FOR THE TREATMENT OF PROTEIN KINASE MEDIATED DISEASES. |
| Amira Pharmaceuticals, US | ***C 07D 211/80***<br>***C 07D 213/02***<br>***C 07D 401/12***<br>***A 61K 31/4418***<br>***A 61P 9/02***<br>***A 61P 11/00*** | EP 2328869* | HETEROARYL ANTAGONISTS OF PROSTAGLANDIN D2 RECEPTORS |
| Amplimmune, US | ***C 07K 14/47*** | EP 2324055* | PD-1 ANTAGONISTS AND METHODS OF USE THEREOF |
| Amyris, US | ***C 10L 1/10***<br>***C 10L 1/16*** | EP 2084249* | FUEL COMPOSITIONS COMPRISING FARNESANE AND FARNESANE DERIVATIVES AND METHOD OF MAKING AND USING SAME |
| Amyris, US | ***C 10L 1/18*** | EP 2099883* | JET FUEL COMPOSITIONS AND METHODS OF MAKING AND USING SAME |
| Amyris, US | ***C 10L 1/18*** | EP 2099884* | JET FUEL COMPOSITIONS AND METHODS OF MAKING AND USING SAME |
| Anglo Netherlands Grain BV, NL | ***C 12N 15/82***<br>***C 12N 15/55***<br>***C 12N 9/10***<br>***A 01H 5/00***<br>***A 01H 5/10*** | EP 2331694* | HERBICIDE RESISTANT SUNFLOWER PLANTS |
| Anthrogenesis Corporation, US | ***A 61K 38/39***<br>***C 07K 14/78***<br>***A 61K 35/12***<br>***C 12N 5/06***<br>***A 61P 17/02*** | EP 2076279* | NATIVE (TELOPEPTIDE) PLACENTAL COLLAGEN COMPOSITIONS |
| Antonio Lupi Desing S.P.A, IT | ***A 47K 3/34***<br>***E 05D 15/06*** | EP 2305085 | Shower cabin with sliding door |
| AP Pharma, US | ***A 61K 9/00***<br>***A 61K 47/34*** | EP 2326304* | METHODS FOR ENHANCING THE STABILITY OF POLYORTHOESTERS AND THEIR FORMULATIONS |
| Aposcience AG, AT | ***G 01N 33/68*** | EP 2330424 | COPD diagnosis |
| APPLE INC., US | ***G 06F 1/32*** | EP 2115550* | METHODS AND SYSTEMS FOR POWER MANAGEMENT IN A DATA PROCESSING SYSTEM |
| APPLE INC., US | ***G 06F 17/00***<br>***G 06F 3/00***<br>***G 06F 13/00***<br>***G 06F 9/00*** | EP 2115627* | SYNCHRONIZATION METHODS AND SYSTEMS |
| Apple Inc., US | ***G 02B 6/38***<br>***H 01R 13/66***<br>***G 06F 1/26***<br>***G 06F 1/16*** | EP 2335107* | MAGNETIC CONNECTOR WITH OPTICAL SIGNAL PATH |
| Aquaprojekt Kft., HU | ***B 64F 5/00***<br>***E 04G 1/36*** | EP 2138402 | Variable modular docking system |
| Ardea Biosciences, US | ***C 07D 233/42***<br>***C 07D 233/30***<br>***A 61K 31/44***<br>***A 61P 3/00*** | EP 2328874* | COMPOUNDS, COMPOSITIONS AND METHODS OF USING SAME FOR MODULATING URIC ACID LEVELS |

| (71) | (51) | Broj objave evropske prijave patenta | (54) |
|---|---|---|---|
| Ardea Biosciences, US | ***C 07D 249/08***<br>***C 07D 249/12***<br>***C 07D 249/10***<br>***A 61K 31/4196***<br>***A 61P 9/10***<br>***A 61P 19/02*** | EP 2328879* | COMPOUNDS, COMPOSITIONS AND METHODS OF USING SAME FOR MODULATING URIC ACID LEVELS |
| Arena Pharmaceuticals, US | ***C 07D 209/70***<br>***C 07D 209/88***<br>***C 07D 401/12***<br>***C 07D 403/12***<br>***C 07D 417/12***<br>***A 61P 37/00***<br>***A 61K 31/403*** | EP 2326621* | SUBSTITUTED 1,2,3,4-TETRAHYDROCYCLOPENTA[b]INDOL-3-YL) ACETIC ACID DERIVATIVES USEFUL IN THE TREATMENT OF AUTOIMMUNE AND INFLAMMATORY DISORDERS |
| Arena Pharmaceuticals, US | ***C 07D 487/04***<br>***A 61K 31/407***<br>***A 61K 31/437***<br>***A 61P 29/00***<br>***A 61P 31/12***<br>***A 61P 37/00*** | EP 2342205* | SUBSTITUTED TRICYCLIC ACID DERIVATIVES AS S1P1 RECEPTOR AGONISTS USEFUL IN THE TREATMENT OF AUTOIMMUNE AND INFLAMMATORY DISORDERS |
| Ares Trading S.A., CH | ***A 61K 31/496***<br>***A 61P 35/00*** | EP 2139482* | TREATMENT FOR MULTIPLE MYELOMA |
| Argos Therapeutics, US | ***C 12N 5/0784***<br>***A 61K 39/00*** | EP 2251418 | Mature dendritic cell compositions and methods for culturing same |
| Array Biopharma, US | ***C 07D 471/04***<br>***A 61K 31/47*** | EP 2334677* | TRIAZOLOPYRIDINE COMPOUNDS AS PIM KINASE INHIBITORS |
| Arta Plast AB, SE | ***B 65D 43/02***<br>***B 65D 77/20*** | EP 2202174 | Container lid |
| Asahi Kasei Chemicals Corporation, JP | ***C 08F 8/42***<br>***C 08F 4/48***<br>***C 08F 36/04***<br>***C 08K 3/04***<br>***C 08K 3/36***<br>***C 08L 15/00*** | EP 2338919 | MODIFIED CONJUGATED DIENE POLYMER, METHOD FOR PRODUCING THE SAME, MODIFIED CONJUGATED DIENE POLYMER COMPOSITION, AND TIRE |
| Astellas Pharma Inc., JP | ***A 61K 31/5375***<br>***A 61P 25/04***<br>***C 07D 265/30*** | EP 2329824 | NOVEL PHARMACEUTICAL COMPOSITION FOR TREATMENT OF NOCICEPTIVE PAIN |
| Astellas Pharma Inc., JP | ***C 07D 265/30*** | EP 2330099 | NOVEL SALT OF MORPHOLINE DERIVATIVE |
| Astex Therapeutics Limited, GB | ***C 07D 471/04***<br>***C 07D 487/04***<br>***A 61K 31/437***<br>***A 61P 35/00*** | EP 2121687* | TRICYCLIC AMINE DERIVATIVES AS PROTEIN TYROSINE KINASE INHIBITORS |
| Astex Therapeutics Ltd., GB | ***C 07D 487/04***<br>***A 61K 31/519***<br>***A 61P 35/00*** | EP 2331547* | PYRROLOPYRIMIDINE COMPOUNDS AS CDK INHIBITORS |
| AstraZeneca AB, SE | ***C 07D 215/52***<br>***A 61K 31/47***<br>***A 61P 1/00***<br>***A 61P 11/00***<br>***A 61P 15/00***<br>***A 61P 25/00***<br>***A 61P 35/00*** | EP 2137155* | QUINOLINE DERIVATIVES, PHARMACEUTICAL COMPOSITIONS COMPRISING THEM, AND THEIR USE IN TREATING CENTRAL NERVOUS SYSTEM AND PERIPHERAL DISEASES |
| AstraZeneca AB, SE | ***C 07D 487/04***<br>***A 61K 31/519***<br>***A 61P 3/04***<br>***A 61P 3/10*** | EP 2324028* | THERAPEUTIC AGENTS 414 |
| AstraZeneca AB, SE | ***C 07D 231/14***<br>***A 61K 31/496***<br>***A 61P 35/00*** | EP 2328872* | PYRAZOLE COMPOUNDS 436 |

| (71) | (51) | Broj objave evropske prijave patenta | (54) |
|---|---|---|---|
| AstraZeneca AB, SE | ***C 07D 405/04***<br>***A 61K 31/443***<br>***A 61K 51/04***<br>***A 61P 25/28***<br>***C 07D 307/78*** | EP 2328891* | NEW BENZOFURANS SUITABLE AS PRECURSORS TO COMPOUNDS THAT ARE USEFUL FOR IMAGING AMYLOID DEPOSITS |
| Athenix Corporation, US | ***C 12N 15/82*** | EP 2334795* | COMPOSITIONS AND METHODS FOR EXPRESSION OF A HETEROLOGOUS NUCLEOTIDE SEQUENCE IN PLANTS |
| Atlantic Corporation, US | ***B 65B 57/02***<br>***B 65B 13/04***<br>***B 65B 57/08*** | EP 2342135* | SYSTEMS FOR MONITORING AND CONTROLLING USAGE OF MATERIALS |
| Aware, US | ***H 04L 5/00*** | EP 2327182* | IDENTIFICATION OF PACKET TRAFFIC TRANSMITTED BY VARIOUS DEVICES OPERATED IN MULTIPLE OVERLAPPED FREQUENCY BANDS IN PACKET-BASED OFDM SYSTEMS |
| Barco NV, BE | ***G 09G 3/32*** | EP 2332138* | METHOD AND SYSTEM FOR COMPENSATING AGEING EFFECTS IN LIGHT EMITTING DIODE DISPLAY DEVICES |
| BASF Agrochemical Products, NL | ***C 12N 9/88***<br>***C 12N 15/60***<br>***C 12N 15/82***<br>***A 01H 5/00***<br>***A 01H 5/10*** | EP 2342331* | HERBICIDE-RESISTANT AHAS-MUTANTS AND METHODS OF USE |
| BASF Plant Science GmbH, DE | ***C 12N 15/82***<br>***A 01H 5/00*** | EP 2334797* | PLANTS HAVING ENHANCED YIELD-RELATED TRAITS AND A METHOD FOR MAKING THE SAME |
| BASF SE, DE | ***A 01N 43/10***<br>***A 01N 43/56***<br>***A 01N 43/42*** | EP 2280602* | HERBICIDE MIXTURE |
| BASF SE, DE | ***A 01N 43/80***<br>***A 01N 37/34***<br>***A 01N 37/40***<br>***A 01N 43/58***<br>***A 01N 43/64***<br>***A 01N 43/68***<br>***A 01N 43/70***<br>***A 01N 43/707***<br>***A 01N 43/88***<br>***A 01N 47/22***<br>***A 01N 47/30***<br>***A 01N 47/36***<br>***A 01N 61/00*** | EP 2285221* | HERBICIDAL COMPOSITIONS COMPRISING PYROXASULFONE VI |
| BASF SE, DE | ***A 01N 33/18***<br>***A 01N 43/50***<br>***A 01N 25/04***<br>***A 01P 13/00*** | EP 2334174* | LIQUID ACTIVE INGREDIENT CONCENTRATES THAT CAN BE EMULSIFIED IN WATER |
| Bayer CropScience AG, DE | ***A 01N 43/90***<br>***A 01P 3/00*** | EP 2271219* | USE OF DITHIIN TETRACARBOXIMIDES FOR TREATING PHYTOPATHOGENIC FUNGI |
| Bayer Schering Pharma Aktiengesellschaft, DE | ***A 61K 9/00***<br>***A 61K 9/16***<br>***A 61K 9/70***<br>***A 61K 31/565*** | EP 2331067* | PROGESTIN-CONTAINING DRUG DELIVERY SYSTEM |
| Baylor Research Institute, US | ***A 61K 39/395***<br>***A 61P 17/00***<br>***A 61P 19/02***<br>***A 61P 37/00*** | EP 2341934* | METHODS TO REDUCE B-HELPER T CELLS TO TREAT AUTOIMMUNE DISEASES |

| (71) | (51) | Broj objave evropske prijave patenta | (54) |
|---|---|---|---|
| BDI-BIOENERGY INTERNATIONAL AG, AT | ***C 10G 1/02***<br>***C 10G 3/00***<br>***C 10G 9/00*** | EP 2324099* | METHOD FOR EXTRACTING FUELS AND PROPELLANTS |
| Belsey,NZ; | ***B 66F 15/00***<br>***A 01B 1/02***<br>***B 65D 1/02*** | EP 2334587* | IMPROVEMENTS IN RELATION TO TOOLS |
| BIO.LO.GA. S.r.l., IT | ***A 01N 49/00***<br>***A 01N 55/00***<br>***A 01P 7/00*** | EP 2334186* | USE OF VITAMIN E OR DERIVATIVES THEREOF FOR THE CONTROL OF ARTHROPODS |
| Biogen Idec MA Inc., US | ***A 61K 39/395***<br>***A 61P 25/00***<br>***C 07K 16/18***<br>***C 07K 16/28*** | EP 2238986 | Sp35 antibodies and uses thereof |
| Biolase S.p.A., IT | ***C 02F 1/66***<br>***C 02F 1/72***<br>***C 02F 9/00***<br>***C 02F 11/06***<br>***C 02F 101/20***<br>***C 02F 101/30*** | EP 2342164* | PROCESS FOR THE DISPOSAL OF WASTES, PARTICULARLY OF SLUDGES DERIVING FROM WASTE WATER DEPURATION |
| Biolink Life Sciences, US | ***A 23L 1/29***<br>***A 23L 1/30***<br>***A 23L 1/304***<br>***A 23L 1/302***<br>***A 23L 1/303*** | EP 2330924* | IRON-CONTAINING NUTRITIONAL SUPPLEMENT |
| BioprocessH20 LLC, US | ***C 12N 1/12***<br>***C 12M 1/24*** | EP 2337843* | SYSTEMS, APPARATUSES AND METHODS FOR CULTIVATING MICROORGANISMS AND MITIGATION OF GASES |
| Board of Regents,US; | ***C 07D 241/40***<br>***C 07D 319/18***<br>***C 07D 335/04***<br>***C 07D 265/36***<br>***C 07D 279/16***<br>***A 61K 31/535***<br>***A 61P 21/00*** | EP 2328877* | 1,4-BENZOXAZINE COMPOUNDS AND DERIVATIVES THEREOF AS THERAPEUTIC DRUGS FOR THE TREATMENT OF NEURODEGENERATIVE CONDITIONS |
| Boehringer Ingelheim International GmbH, DE | ***C 07K 16/28***<br>***A 61P 35/02***<br>***A 61K 39/395***<br>***C 12N 5/00*** | EP 2241577 | Anti-CD37 antibodies |
| Boehringer Ingelheim International GmbH, DE | ***A 61K 31/40***<br>***A 61K 31/4025***<br>***A 61K 31/403***<br>***A 61K 31/422***<br>***A 61K 31/4375***<br>***A 61K 31/4439***<br>***A 61K 31/4985***<br>***A 61K 31/5025***<br>***A 61K 31/506***<br>***A 61K 31/513***<br>***A 61K 31/522***<br>***A 61P 3/10*** | EP 2323650* | TREATMENT FOR DIABETES IN PATIENTS INAPPROPRIATE FOR METFORMIN THERAPY |
| Boehringer Ingelheim International GmbH, DE | ***C 07D 239/48***<br>***C 07D 401/04***<br>***C 07D 401/06***<br>***C 07D 403/06***<br>***C 07D 403/14***<br>***C 07D 409/06***<br>***C 07D 413/14***<br>***A 61K 31/495*** | EP 2323992* | 5-ALKYNYL-PYRIMIDINES |

| (71) | (51) | Broj objave evropske prijave patenta | (54) |
|---|---|---|---|
| Boehringer Ingelheim International GmbH, DE | ***C 07D 403/00***<br>***C 07D 209/34***<br>***C 07D 401/04***<br>***C 07D 403/04***<br>***A 61K 31/506***<br>***A 61P 35/00*** | EP 2324012* | NEW COMPOUNDS |
| Boehringer Ingelheim International GmbH, DE | ***A 61K 31/40***<br>***A 61K 31/4985***<br>***A 61K 31/403***<br>***A 61K 31/422***<br>***A 61K 31/44***<br>***A 61K 31/473***<br>***A 61K 31/496***<br>***A 61K 31/53***<br>***A 61K 31/522***<br>***A 61K 9/20***<br>***A 61P 17/02***<br>***A 61K 31/4196*** | EP 2326326* | PURIN DERIVATIVES FOR USE IN THE TREATMENT OF FAB-RELATED DISEASES |
| Boehringer Ingelheim International GmbH, DE | ***C 07D 417/14***<br>***A 61K 31/4709***<br>***A 61P 31/12*** | EP 2331538* | CRYSTALLINE FORMS OF A 2-THIAZOLYL- 4-QUINOLINYL-OXY DERIVATIVE, A POTENT HCV INHIBITOR |
| Boehringer Ingelheim International GmbH, DE | ***C 07D 487/04***<br>***A 61K 31/519***<br>***A 61P 25/00***<br>***A 61P 3/00*** | EP 2334684* | PYRAZOLOPYRIMIDINES AND THEIR USE FOR THE TREATMENT OF CNS DISORDERS |
| Boehringer Ingelheim International GmbH, DE | ***A 61K 45/06*** | EP 2337583* | COMBINATION OF HCV NS3 PROTEASE INHIBITOR WITH INTERFERON AND RIBAVIRIN |
| Boehringer Ingelheim International GmbH, DE | ***C 07D 413/12***<br>***C 07D 261/14***<br>***C 07D 413/14***<br>***C 07D 249/14***<br>***C 07D 413/04***<br>***C 07D 405/12***<br>***A 61K 31/42***<br>***A 61P 29/00***<br>***A 61P 37/00***<br>***A 61P 35/00***<br>***A 61P 1/00***<br>***A 61K 31/4196*** | EP 2342200* | COMPOUNDS WHICH SELECTIVELY MODULATE THE CB2 RECEPTOR |
| Boehringer Ingelheim International GmbH,DE; | ***C 07D 413/10***<br>***C 07D 413/14***<br>***A 61K 31/5355***<br>***A 61P 3/00***<br>***A 61P 19/10***<br>***A 61P 25/00*** | EP 2324017* | INHIBITORS OF 11beta-HYDROXYSTEROID DEHYDROGENASE 1 |
| Boehringer Ingelheim International GmbH,DE; | ***C 07D 413/10***<br>***C 07D 413/14***<br>***A 61K 31/5355***<br>***A 61P 19/10*** | EP 2324018* | CYCLIC INHIBITORS OF 11 BETA-HYDROXYSTEROID DEHYDROGENASE 1 |
| Boston Scientific Scimed, US | ***A 61B 17/04*** | EP 2330986* | ENDOSCOPIC SUTURING DEVICE |
| Boston Scientific Scimed, US | ***A 61B 1/018***<br>***A 61B 17/00*** | EP 2337488* | ENDOSCOPE WITH GUIDE |
| Brizio, CH | ***A 47J 31/30*** | EP 2326222* | CAN FOR THE EXTEMPORANEOUS PREPARATION OF BEVERAGES BY EXTRACTION AND/OR INFUSION, PROVIDED WITH A SAFETY LID |
| Brookhaven Science Associates, US | ***C 12N 15/09***<br>***C 12N 15/32*** | EP 2084279* | DNA-GUIDED NANOPARTICLE ASSEMBLIES |

| (71) | (51) | Broj objave evropske prijave patenta | (54) |
|---|---|---|---|
| Brushgate Oy, FI | ***A 46B 15/00***<br>***A 61C 19/04*** | EP 2326208* | INTELLIGENT TOOTHBRUSH MONITORING DEVICE |
| Burcon Nutrascience (MB) Corp., CA | ***A 23J 3/14***<br>***A 23J 1/14***<br>***A 23K 1/14***<br>***A 23L 1/305***<br>***C 07K 1/14***<br>***C 07K 14/415*** | EP 2323499* | PRODUCTION OF CANOLA PROTEIN ISOLATE WITHOUT HEAT TREATMENT |
| Burcon Nutrascience (MB) Corp., CA | ***A 23L 1/24***<br>***A 23D 7/00***<br>***A 23D 7/04***<br>***A 23J 1/14***<br>***A 23L 1/035***<br>***B 01F 17/30*** | EP 2337460* | EMULSIFIED FOODS |
| Burdica Biomed Limited, GB | ***A 61K 9/06***<br>***A 61K 9/00***<br>***A 61K 31/728*** | EP 2341895* | HYALURONIC ACID CRYOGEL - COMPOSITIONS, USES, PROCESSES FOR MANUFACTURING |
| Cadila Healthcare Limited, IN | ***C 07D 239/69***<br>***C 07D 239/38***<br>***C 07D 239/54*** | EP 2331513* | PROCESS FOR PREPARATION OF BOSENTAN |
| Cadila Healthcare Limited, IN | ***C 07D 487/04*** | EP 2331545* | IMPROVED PROCESS FOR PREPARATION OF (2R)-4-OXO-4-[3-(TRIFLUOROMETHYL)-5,6-DIHYDRO [1,2,4]-TRIAZOLO[4,3-A]PYRAZIN- 7(8H)-YL]-L-(2,4,5-TRIFLUOROPHENYL)BUTAN-2-AMINE&NEW IMPURITIES IN PREPARATION THEREOF |
| Calisse, IT | ***E 04C 2/04*** | EP 2342394* | CONNECTION SYSTEM FOR PREFABRICATED THERMAL BREAK PANELS |
| Cancer Research Technology Limited, GB | ***C 07D 401/04***<br>***C 07D 401/14***<br>***C 07D 409/14***<br>***C 07D 413/14***<br>***C 07D 417/14***<br>***C 07D 471/10***<br>***A 61K 31/4545***<br>***A 61K 31/5377***<br>***A 61K 31/454***<br>***A 61K 31/506***<br>***A 61K 31/438***<br>***A 61P 35/00*** | EP 2331523* | PYRIDINE AND PYRIMIDINE BASED COMPOUNDS AS WNT SIGNALING PATHWAY INHIBITORS FOR THE TREATMENT OF CANCER |
| Cardoz AB, SE | ***A 61K 31/519***<br>***A 61P 37/00***<br>***A 61P 9/00***<br>***A 61K 31/403*** | EP 2107907* | Combination of pemirolast and ramatroban for use in the treatment of inflammatory disorders |
| Carlsberg Breweries A/S, DK | ***B 67D 1/07*** | EP 2331450* | METHOD FOR CLEANING AND FLUSHING A BEVERAGE DISPENSING SYSTEM |
| Carlsberg Breweries A/S, DK | ***B 67D 7/84***<br>***B 67D 1/08*** | EP 2337762* | A METHOD FOR INSTALLING A COLLAPSIBLE BEVERAGE CONTAINER IN A BEVERAGE DISTRIBUTION UNIT |
| Carolus Therapeutics, US | ***C 07K 7/08***<br>***C 07K 14/00***<br>***A 61K 38/10***<br>***A 61K 38/16***<br>***A 61P 31/00*** | EP 2331564* | METHODS OF TREATING INFLAMMATION |
| Carpi Tech B.V. Amsterdam, CH | ***E 02B 3/16***<br>***E 02B 5/02*** | EP 2331753* | METHOD AND SYSTEM FOR PUNCTUAL FASTENING A WATERPROOFING MEMBRANE TO HYDRAULIC WORKS |

| (71) | (51) | Broj objave evropske prijave patenta | (54) |
|---|---|---|---|
| Catini, IT | ***A 45D 1/04***<br>***A 45D 2/38***<br>***A 45D 1/12*** | EP 2341794* | A HAIR CURLING DEVICE |
| Centocor Ortho Biotech Inc., US | ***A 61K 39/395*** | EP 2328615* | ENGINEERED ANTI-IL-13 ANTIBODIES, COMPOSITIONS, METHODS AND USES |
| Centocor Ortho Biotech Inc., US | ***C 12N 5/06***<br>***C 12N 5/10*** | EP 2331678* | METHODS FOR OBTAINING HIGH VIABLE CELL DENSITY IN MAMMALIAN CELL CULTURE |
| Centro De Ingenieria Genetica Y Biotecnologia, CU | ***A 61K 47/48***<br>***A 61K 38/09***<br>***A 61P 35/00***<br>***A 61P 43/00***<br>***A 61P 15/00***<br>***A 61K 39/00*** | EP 2335736 | PHARMACEUTICAL COMPOSITION UTILISING COMBINATIONS OF VARIANTS OF THE GONADOTROPIN-LIBERATING HORMONE (GNRH) AS IMMUNOGEN |
| Cephalon, US | ***A 61K 9/08***<br>***A 61K 47/20***<br>***A 61K 31/4184*** | EP 2326306* | LIQUID FORMULATIONS OF BENDAMUSTINE |
| Certainteed Gypsum, US | ***B 32B 13/04*** | EP 2323842* | PLASTIC COATED COMPOSITE BUILDING BOARDS AND METHOD OF MAKING SAME |
| Chemagis Ltd., IL | ***C 07D 217/20***<br>***C 07B 57/00*** | EP 2125743* | (1R,1'R)-ATRACURIUM SALTS SEPARATION PROCESS |
| Chemagis Ltd., IL | ***C 07D 217/20***<br>***C 07B 57/00*** | EP 2132181* | (1R,1'R)-ATRACURIUM SALTS SEPARATION PROCESS |
| Chemco Ventures (Cyprus) Limited, CY | ***A 61K 31/216***<br>***A 61K 31/513***<br>***A 61P 35/00***<br>***A 61P 35/04*** | EP 2331091* | PHARMACEUTICAL COMBINATION OF 1-(2-TETRAHYDROFURYL)-5-FLUOROURACIL AND CAFFEIC ACID PHENETHYL ESTER FOR ORAL TREATING OF TUMORS |
| ChemoCentryx, US | ***A 61K 31/497*** | EP 2323663* | 4-AMINO-3-(IMIDAZOLYL)-PYRAZOLO[3,4-D]PYRIMIDINES |
| Chen, US | ***B 42D 15/02*** | EP 2082895 | Massage card |
| Chugai Seiyaku Kabushiki Kaisha, JP | ***C 12N 15/09***<br>***A 61K 39/395***<br>***A 61P 1/04***<br>***A 61P 1/16***<br>***A 61P 3/10***<br>***A 61P 7/06***<br>***A 61P 9/00***<br>***A 61P 9/10***<br>***A 61P 11/00***<br>***A 61P 11/06***<br>***A 61P 13/12***<br>***A 61P 15/08***<br>***A 61P 17/00***<br>***A 61P 17/06***<br>***A 61P 19/02***<br>***A 61P 19/10***<br>***A 61P 21/00***<br>***A 61P 25/00***<br>***A 61P 27/02***<br>***A 61P 29/00*** | EP 2330193 | IMPROVED ANTIBODY MOLECULE |
| Cima Labs Inc., US | ***A 61K 31/5415***<br>***A 61K 9/50*** | EP 2334302* | DOSAGE FORMS FOR WEAKLY IONIZABLE COMPOUNDS |
| Ciments Français, FR | ***C 04B 18/02***<br>***C 04B 28/04***<br>***C 04B 28/06***<br>***C 04B 28/14***<br>***C 04B 28/16*** | EP 2334614* | METHOD OF TREATING MARINE SEDIMENTS AND USE OF THE RESULTING SOLID PRODUCT IN MORTARS OR CONCRETES |
| Clariant International Ltd., CH | ***C 07C 245/08***<br>***C 07C 309/46*** | EP 2251321 | Monoazo compounds |

| (71) | (51) | Broj objave evropske prijave patenta | (54) |
|---|---|---|---|
| Clariant International Ltd., CH | ***C 09B 35/031***<br>***C 09D 11/00***<br>***D 06P 3/14***<br>***D 06P 3/24***<br>***C 09B 29/36*** | EP 2251387 | Acidic azo dyes |
| Clark,CA; | ***B 65D 88/12***<br>***B 65D 88/06***<br>***B 01D 21/02***<br>***C 02F 1/00*** | EP 2204340 | Portable tank apparatus and method of use |
| Cockbain, GB | ***E 21B 43/00***<br>***E 21B 43/24***<br>***E 21B 43/243***<br>***E 21B 41/00***<br>***C 09K 8/00***<br>***C 10G 47/00*** | EP 2334898* | PROCESS FOR GENERATING HYDROGEN |
| Collins, GB | ***F 24J 1/00*** | EP 2129973* | A METHOD OF GENERATING HEAT |
| Colorep, US | ***G 06K 15/12*** | EP 2082358* | HOLLOW DOT PRINTING APPARATUS AND METHODS |
| Concert Pharmaceuticals Inc., US | ***A 01N 43/64***<br>***A 61K 31/41*** | EP 2328414* | SUBSTITUTED TRIAZOLO-PYRIDAZINE DERIVATIVES |
| CONCERT PHARMACEUTICALS, US | ***C 07B 59/00***<br>***C 07C 237/06*** | EP 2334621* | DEUTERATED 2-AMINO-3-HYDROXYPROPANOIC ACID DERIVATIVES |
| Consiglio Nazionale delle Ricerche, IT | ***F 23C 10/00*** | EP 2326875* | PLANT AND PROCESS FOR THE LOOPING-TYPE COMBUSTION OF SOLID CARBON-CONTAINING FUELS |
| Cool Polymers, US | ***B 22D 17/04***<br>***C 22C 18/00*** | EP 2326442* | MULTI-COMPONENT METAL INJECTION MOLDING |
| Corcel IP Limited, NZ | ***B 31F 1/20***<br>***B 30B 3/00***<br>***B 30B 11/18*** | EP 2323840* | IMPROVEMENTS IN CORRUGATING ROLLERS |
| Corcel IP Limited, NZ | ***B 32B 3/28***<br>***B 32B 29/08*** | EP 2340161* | MANUFACTURING PROCESS |
| Cordis Corporation, US | ***A 61B 17/064***<br>***A 61B 17/122***<br>***A 61B 17/128***<br>***A 61B 17/00*** | EP 2341842* | PLICATION DEVICE WITH FORMABLE LINEAR FASTENER FOR USE IN THE DIRECT PLICATION ANNULOPLASTY TREATMENT OF MITRAL VALVE REGURGITATION |
| Coretherapix Slu, ES | ***A 61K 9/16***<br>***A 61K 38/18*** | EP 2323626* | PARENTERAL COMPOSITION COMPRISING MICROSPHERES WITH A DIAMETER BETWEEN 10 AND 20 MICRONS |
| Cornell University, US | ***A 61M 29/00*** | EP 2334367* | METHOD AND APPARATUS FOR ACCESSING THE WALL OF A VASCULAR STRUCTURE OR OTHER BODY LUMEN WHILE SIMULTANEOUSLY PROVIDING ZONE ISOLATION AND FLUID BYPASS CAPABILITY |
| Cosmo Oil Co.,JP; | ***C 10G 2/00*** | EP 2336269 | SYSTEM FOR SEPARATING CATALYST |
| Cosmo Oil Co.,JP; | ***C 10G 2/00*** | EP 2336270 | METHOD FOR SYNTHESIZING LIQUID FUEL AND APPARATUS FOR SYNTHESIZING LIQUID FUEL |
| Cosmo Oil Co.,JP; | ***C 10G 2/00*** | EP 2336271 | UNIT FOR HYDROCARBON COMPOUND SYNTHESIS REACTION AND METHOD OF OPERATING SAME |
| Creta Farm Societe Anonyme, GR | ***A 23L 1/31***<br>***A 23L 1/314***<br>***A 23L 1/315***<br>***A 23L 1/317*** | EP 2328427* | OIL COMPOSITION FOR THE PREPARATION OF OIL CONTAINING FOOD PRODUCTS |

| (71) | (51) | Broj objave evropske prijave patenta | (54) |
|---|---|---|---|
| CV Holdings, US | ***C 23C 16/505***<br>***G 01N 15/08***<br>***A 61B 5/15*** | EP 2251452 | Vessel processing |
| CV Holdings, US | ***C 23C 16/505***<br>***C 23C 16/52***<br>***C 23C 16/54***<br>***G 01N 15/08***<br>***A 61B 5/15*** | EP 2251454 | Vessel coating and inspection |
| CV Holdings, US | ***C 23C 16/505***<br>***C 23C 16/54***<br>***G 01N 15/08***<br>***A 61B 5/15***<br>***C 23C 16/04***<br>***C 23C 16/52*** | EP 2253735 | Vessel processing |
| Dall Energy Holding ApS, DK | ***F 23J 15/04***<br>***F 23J 15/06***<br>***B 01D 47/06***<br>***B 01D 53/78*** | EP 2331875* | METHOD AND SYSTEM FOR COOLING HOT GASES BY WATER INJECTION |
| Dall Energy Holding ApS, DK | ***C 10J 3/22***<br>***F 23G 5/24*** | EP 2334762* | METHOD AND SYSTEM FOR PRODUCTION OF A CLEAN HOT GAS BASED ON SOLID FUELS |
| Danfoss Low Power Drives, DK | ***E 04H 4/12***<br>***F 04B 49/06***<br>***F 04B 49/20***<br>***F 04D 15/00***<br>***G 05D 7/06*** | EP 2122171* | FLOW CONTROL |
| Danmarks Tekniske Universitet, DK | ***A 61L 2/10*** | EP 2334340* | ASSEMBLY AND METHOD FOR DISINFECTING LUMENS OF MEDICAL DEVICES |
| Davinci Italia/USA Group, US | ***E 04F 13/08***<br>***E 04F 21/18***<br>***E 04F 21/22*** | EP 2343419 | Tile alignment and leveling device and method for using same |
| Dean, AU | ***F 16H 3/72***<br>***F 16H 3/64*** | EP 2337971* | AN EPICYCLIC TRANSMISSION |
| Deere & Company, US | ***A 01D 41/127*** | EP 2250871 | Scalable grain tank fill level display |
| Delphi Technologies Holding S.à.r.l., LU | ***F 02M 55/00*** | EP 2243950 | A connector arrangement for a fluid system |
| Delphi Technologies Holding S.à.r.l., LU | ***F 02M 47/02***<br>***F 02M 55/00***<br>***F 02M 69/54***<br>***F 02M 63/02*** | EP 2249021 | Fuel Delivery System |
| Desmeules, CA | ***F 24J 3/08***<br>***E 21B 10/00***<br>***F 03G 4/00***<br>***F 16L 1/028***<br>***F 16L 1/032***<br>***F 25B 27/00***<br>***F 25B 41/00*** | EP 2334993* | SYSTEM AND METHOD FOR GEOTHERMAL CONDUIT LOOP IN-GROUND INSTALLATION AND SOIL PENETRATING HEAD THEREFOR |
| Despharma Egészségügyi Szolgáltató Korlátolt, HU | ***A 61K 33/06***<br>***A 61K 33/12***<br>***A 61P 17/00*** | EP 2323672* | COMPOSITIONS FOR THE PROPHYLAXIS AND TREATMENT OF DERMATOLOGICAL/MUCOSAL DISEASES, AND USES THEREOF |
| Diadexus, US | ***A 61K 39/395***<br>***C 07K 16/46***<br>***C 07K 16/28***<br>***A 61P 35/00*** | EP 2104513* | OVR110 ANTIBODY COMPOSITIONS AND METHODS OF USE |
| Dirty Laundry, US | ***C 11D 17/06***<br>***C 11D 3/37*** | EP 2337840* | LAUNDRY STAIN AND SOIL PRETREATMENT SHEET |

| (71) | (51) | Broj objave evropske prijave patenta | (54) |
|---|---|---|---|
| Dong-A Pharm.Co., KR | ***C 07D 211/62***<br>***C 07D 401/06***<br>***C 07D 401/12***<br>***C 07D 417/12***<br>***A 61K 31/165***<br>***A 61K 31/445***<br>***A 61P 1/00***<br>***A 61P 1/06*** | EP 2137152* | NOVEL BENZAMIDE DERIVATIVES AND PROCESS FOR THE PREPARATION THEREOF |
| Dow Global Technologies LLC, US | ***C 07C 263/20***<br>***B 01D 3/00***<br>***C 07C 265/04***<br>***C 07C 265/14***<br>***B 01D 3/14*** | EP 2337777* | APPARATUS, SYSTEMS, AND METHODS FOR PURIFICATION OF ISOCYANATE MIXTURES |
| Dow Global Technologies LLC, US | ***C 07C 263/20***<br>***B 01D 3/00***<br>***C 07C 265/04***<br>***B 01D 3/14*** | EP 2342176* | APPARATUS, SYSTEMS, AND METHODS FOR PURIFICATION OF ISOCYANATE MIXTURES |
| Dr. Falk Pharma Gmbh, DE | ***A 01N 37/36*** | EP 2334178* | COMPOSITIONS AND METHODS FOR THE TREATMENT OF BOWEL DISEASES WITH GRANULATED MESALAMINE |
| DSM IP Assets B.V., NL | ***C 12N 9/96***<br>***A 23C 19/032***<br>***C 12N 9/52***<br>***C 12N 9/58***<br>***C 12N 9/64*** | EP 2333056 | Liquid composition comprising an aspartic protease |
| Eisai R&D Management Co., JP | ***C 12N 15/09***<br>***C 07K 16/18***<br>***C 12N 5/06***<br>***C 12Q 1/02***<br>***C 12Q 1/68***<br>***G 01N 33/53***<br>***C 12P 21/08*** | EP 2119777 | GABA NEURON PROGENITOR CELL MARKER 65B13 |
| Eisai R&D Management Co., JP | ***C 07D 239/84*** | EP 2123641 | CRYSTAL, AMORPHOUS FORM AND SALT OF METHYL N-[3-(6,7-DIMETHOXY- 2-METHYLAMINOQUINAZOLIN-4-YL)PHENYL]TEREPHTHALAMIC ACID |
| Eisai R&D Management Co., JP | ***C 07D 513/04***<br>***A 61K 31/542***<br>***A 61P 25/00***<br>***A 61P 25/28***<br>***A 61P 43/00*** | EP 2332943 | NOVEL FUSED AMINODIHYDROTHIAZINE DERIVATIVE |
| Eksen Makine Sanayi ve Ticaret A.S., TR | ***D 06F 75/12***<br>***D 06F 75/38*** | EP 2243877 | Iron with external water reservoir |
| Eksen Makine Sanayi ve Ticaret A.S., TR | ***A 47J 37/06*** | EP 2250951 | Toasting apparatus with a handle having predetermined locking positions |
| Elan Pharma International Limited, US | ***C 12Q 1/25***<br>***G 01N 33/50*** | EP 2115159* | ASSAYS FOR MODULATORS OF PARKIN ACTIVITY USING NOVEL SUBSTRATES |
| ELI LILLY AND COMPANY, US | ***C 07K 16/26***<br>***G 01N 33/577***<br>***A 61K 39/395***<br>***A 61P 7/06*** | EP 2328931* | ANTI-HEPCIDIN-25 SELECTIVE ANTIBODIES AND USES THEREOF |
| ELI LILLY AND COMPANY, US | ***C 07K 14/505***<br>***C 12N 15/11***<br>***C 12N 15/16***<br>***C 12N 5/10***<br>***C 12P 21/02***<br>***A 61P 7/06*** | EP 2342223* | MODIFIED ANIMAL ERYTHROPOIETIN POLYPEPTIDES AND THEIR USES |
| Elica S.p.A., IT | ***F 24C 15/20*** | EP 2249088 | Extractor hood, in particular for domestic environments |

| (71) | (51) | Broj objave evropske prijave patenta | (54) |
|---|---|---|---|
| E-Mak Makina Insaat Ticaret Ve San. LTD. STI., TR | ***E 01C 19/10*** | EP 2324157* | A METHOD AND SYSTEM FOR HOT ASPHALT RECYCLING |
| Enel Distribuzione S.p.A., IT | ***G 01R 21/133***<br>***G 01R 22/06***<br>***H 02J 13/00*** | EP 2340440* | ELECTRICITY METER, REMOTE CONTROLLABLE DISCONNECTOR MODULE AND ELECTRICAL INSTALLATION COMPRISING THE ELECTRICITY METER |
| English, IN | ***F 24D 13/02***<br>***E 04C 2/52***<br>***F 28F 21/04*** | EP 2338005* | A STONE PANEL |
| Ental Kutatási, HU | ***G 01P 3/68***<br>***G 01P 3/36***<br>***A 63B 69/36*** | EP 2233932 | Optical system and method for determining direction, velocity and position of a ball traversing a plane |
| EOVENDO ApS, DK | ***G 06Q 30/00*** | EP 2324449* | A SYSTEM FOR TARGETED ADVERTISING |
| Epscement International Ab, SE | ***E 04C 2/288***<br>***E 04C 2/04*** | EP 2326775* | BUILDING ELEMENTS AND METHOD OF ERECTING BUILDINGS WITH SAID BUILDING ELEMENTS |
| Ermi 77, FR | ***G 01B 13/12***<br>***G 01B 21/14***<br>***G 01B 21/30*** | EP 2335020* | INSTALLATION FOR CHECKING THE QUALITY OF A SUCCESSION OF ARTICLES, IN PARTICULAR BOTTLES |
| Ethicon Endo-Surgery, US | ***A 61B 1/005***<br>***A 61B 1/313***<br>***A 61B 17/34*** | EP 2341815* | ENDOSCOPIC TRANSLUMENAL ARTICULATABLE AND STEERABLE FLEXIBLE OVERTUBE |
| Ethicon, US | ***A 61B 17/06*** | EP 2337505* | COLLAPSIBLE BARBED SUTURES HAVING REDUCED DRAG AND METHODS THEREFOR |
| Ethicon, US | ***A 61F 5/56*** | EP 2337530* | MAGNETIC IMPLANTS FOR TREATING OBSTRUCTIVE SLEEP APNEA |
| Eurovia, FR | ***E 01C 11/22***<br>***E 01C 7/18***<br>***E 01C 7/26***<br>***C 08L 95/00*** | EP 2334873* | BITUMINOUS COATING WITH GREAT ACOUSTIC PERFORMANCE |
| Excaliard Pharmaceuticals,US; | ***A 61K 48/00*** | EP 2331141* | ANTISENSE OLIGONUCLEOTIDES DIRECTED AGAINST CONNECTIVE TISSUE GROWTH FACTOR AND USES THEREOF |
| Excaliard Pharmaceuticals,US; | ***A 61K 38/18*** | EP 2334319* | METHOD FOR REDUCING SCARRING DURING WOUND HEALING USING ANTISENSE COMPOUNDS DIRECTED TO CTGF |
| F. Hoffmann-La Roche AG, CH | ***A 61K 31/40***<br>***A 61K 31/4025***<br>***A 61P 35/00***<br>***C 07D 207/16***<br>***C 07D 401/06***<br>***C 07D 401/12***<br>***C 07D 401/14***<br>***C 07D 403/06***<br>***C 07D 403/12***<br>***C 07D 405/06***<br>***C 07D 405/12***<br>***C 07D 409/04***<br>***C 07D 409/12***<br>***C 07D 413/12***<br>***C 07D 417/12*** | EP 2340021* | SUBSTITUTED PYRROLIDINE-2-CARBOXAMIDES |
| Fairfield Manufacturing Company, US | ***B 60K 7/00***<br>***B 60K 17/04*** | EP 2329983 | Wheel drive assembly and a spindle carrier |
| Fasolato, IT | ***B 24D 18/00***<br>***B 24D 3/32*** | EP 2323813* | METHOD FOR PRODUCING A TOOL AND TOOL PRODUCED ACCORDING TO SAID METHOD |

| (71) | (51) | Broj objave evropske prijave patenta | (54) |
|---|---|---|---|
| Ferlux S.A., FR | ***A 61K 31/353***<br>***A 61P 39/00*** | EP 2033641 | Process of preparation of extracts rich in proanthocyanidins |
| Fläkt Woods AB, SE | ***E 04B 1/68***<br>***F 16J 15/02***<br>***E 06B 3/62*** | EP 2331760* | ASSEMBLING OF SEAL AND PLATES TO WALL ELEMENT |
| Flexible Stenting Solutions, US | ***A 61F 2/06*** | EP 2341867* | RECONSTRAINABLE STENT DELIVERY SYSTEM |
| Flextech S.r.l., IT | ***B 65B 39/00***<br>***B 65B 39/04***<br>***B 65B 31/04***<br>***B 65B 55/02*** | EP 2241507 | Apparatus for filling flexible containers with a fluid, for example foodstuffs, such as cream, yoghurt, fruit juices and purées, vegetables and similar |
| Ford Global Technologies, US | ***F 02B 37/007***<br>***F 02B 37/02***<br>***F 02B 37/18***<br>***F 01N 13/10***<br>***F 02F 1/24*** | EP 2246543 | Cylinder head with two exhaust manifolds and method to operate an internal combustion engine with such a cylinder head |
| Forest Laboratories Holdings Limited, BM | ***A 61K 38/00***<br>***A 61K 9/50***<br>***A 61K 9/16***<br>***A 61K 9/20***<br>***A 61K 9/48*** | EP 2328601* | LINACLOTIDE-CONTAINING FORMULATIONS FOR ORAL ADMINISTRATION |
| Galderma Research & Development, FR | ***C 07D 401/12***<br>***C 07D 403/12***<br>***A 61K 31/4178*** | EP 2342194* | OXOAZETIDINE DERIVATIVES, PROCESS FOR THE PREPARATION THEREOF AND USE THEREOF IN HUMAN MEDICINE AND IN COSMETICS |
| Ganymed Pharmaceuticals AG, DE | ***C 12Q 1/68*** | EP 2239340 | Identification of surface-oriented antigens for tumour diagnosis and treatment |
| Ganymed Pharmaceuticals AG,DE; | ***C 07K 16/30*** | EP 2342234* | MONOCLONAL ANTIBODIES FOR TREATMENT OF CANCER |
| GAT Microencapsulation AG, AT | ***A 01N 25/04***<br>***A 01N 47/36***<br>***A 01N 43/40***<br>***A 01N 43/60***<br>***A 01N 57/20***<br>***A 01N 39/04***<br>***A 01N 37/10***<br>***A 01N 43/90***<br>***A 01N 47/30***<br>***A 01N 37/40***<br>***A 01N 39/02***<br>***A 01N 37/48***<br>***A 01N 43/653***<br>***A 01N 41/10***<br>***A 01N 43/80*** | EP 2326169* | SUSPENSION CONCENTRATES IN OIL OF SULFONYLUREAS AND COMBINATIONS WITH FLUROXYPYR OR OTHER AGROCHEMICALS |
| Genentech, US | ***C 07D 491/048***<br>***A 61K 31/4355***<br>***A 61K 31/5025***<br>***A 61K 31/519***<br>***A 61P 35/00***<br>***A 61P 29/00*** | EP 2069354* | Aza-benzofuranyl compounds and methods of use |
| Genentech, US | ***C 07D 471/14***<br>***A 61K 31/519***<br>***A 61P 35/00*** | EP 2324024* | DIAZACARBAZOLES AND METHODS OF USE |
| Genentech, US | ***C 07K 16/18***<br>***C 12N 15/13*** | EP 2325208 | Polyubiquitin antibodies |
| Genentech,US; | ***C 07D 239/94***<br>***A 61K 31/517***<br>***A 61P 43/00*** | EP 2094672* | ARYLSULFONAMIDE COMPOUNDS |

| (71) | (51) | Broj objave evropske prijave patenta | (54) |
|---|---|---|---|
| GenKyoTex SA, CH | ***C 07D 471/04***<br>***A 61K 31/444***<br>***A 61K 31/437***<br>***A 61P 3/00***<br>***A 61P 9/00***<br>***A 61P 11/00***<br>***A 61P 17/00***<br>***A 61P 19/08***<br>***A 61P 25/28***<br>***A 61P 27/02***<br>***A 61P 27/16*** | EP 2342203* | PYRAZOLO PYRIDINE DERIVATIVES AS NADPH OXIDASE INHIBITORS |
| Geox S.p.A., IT | ***A 43B 7/06***<br>***A 43B 7/12*** | EP 2298099 | Insert for vapor-permeable and waterproof soles |
| Geox S.p.A., IT | ***A 43B 7/06***<br>***A 43B 7/12*** | EP 2298100 | Vapor-permeable shoe |
| Geox S.p.A., IT | ***A 43B 7/12***<br>***A 43B 7/06*** | EP 2298101 | Insert for vapor-permeable and waterproof soles |
| Gilead Sciences, US | ***A 61K 31/343***<br>***A 61K 31/495***<br>***A 61P 9/06*** | EP 2337559* | METHOD OF TREATING ATRIAL FIBRILLATION |
| GlaxoSmithKline Biologicals S.A., BE | ***A 61K 39/385*** | EP 2328613* | VACCINE |
| GlaxoSmithKline Biologicals S.A.,BE; | ***A 61K 39/095***<br>***C 07K 14/22*** | EP 2331121* | VACCINE COMPRISING PROTEIN NMBO964 FROM MEISSERIA MENINGITIDIS |
| GlaxoSmithKline Biologicals SA, BE | ***A 61K 39/395***<br>***C 07K 16/46*** | EP 2341933* | LIPIDATED IMIDAZOQUINOLINE DERIVATIVES |
| Gmundner Fertigteile Gesellschaft m.b.H. & Co. KG., AT | ***E 01B 1/00***<br>***E 01B 21/02*** | EP 2329079* | TRACK SUPPORTING LAYER |
| Gotovsky, RU | ***A 61B 5/053*** | EP 2163196 | Device for measuring the presence of foreign substances in a living organism and for individually selecting preparations for increasing an organism's life activity |
| Gray, NZ | ***B 66F 15/00***<br>***A 01B 1/02***<br>***B 65D 1/02*** | EP 2334587* | IMPROVEMENTS IN RELATION TO TOOLS |
| Griesson - de Beukelaer, DE | ***A 21C 9/02***<br>***A 21C 15/00*** | EP 2324711 | Method for producing a longitudinal rod-shaped baked good |
| Grindeks, LV | ***A 61K 9/06***<br>***A 61K 47/34***<br>***A 61K 31/205***<br>***A 61P 17/00*** | EP 2340016* | TOPICAL FORMULATION OF 3-(2,2,2-TRIMETHYLHYDRAZINIUM) PROPIONATE DIHYDRATE |
| Grindeks,LV; | ***A 61K 31/216***<br>***A 61K 31/513***<br>***A 61P 35/00***<br>***A 61P 35/04*** | EP 2331091* | PHARMACEUTICAL COMBINATION OF 1-(2-TETRAHYDROFURYL)-5-FLUOROURACIL AND CAFFEIC ACID PHENETHYL ESTER FOR ORAL TREATING OF TUMORS |
| H. Lundbeck A/S, DK | ***A 61K 38/18***<br>***G 01N 33/68***<br>***A 61P 25/28*** | EP 2323687* | METHOD OF UPREGULATING SORLA FOR THE TREATMENT OF ALZHEIMER'S DISEASE |
| H. Lundbeck A/S, DK | ***A 61K 31/437***<br>***A 61K 45/06*** | EP 2334299* | PHARMACEUTICAL COMPOSITION COMPRISING GABOXADOL AND AN INHIBITOR OF PATL OR OAT |
| H. Lundbeck A/S, DK | ***C 07D 217/26***<br>***C 07D 401/06***<br>***C 07D 403/06***<br>***C 07D 407/04***<br>***A 61K 31/472***<br>***A 61P 25/18*** | EP 2342182* | ISOQUINOLINONE DERIVATIVES AS NK3 ANTAGONISTS |

| (71) | (51) | Broj objave evropske prijave patenta | (54) |
|---|---|---|---|
| H.M. Heizkörper GmbH + Co. KG, DE | ***F 24H 3/00*** | EP 2187144 | Electric plate radiator |
| Hachin, FR | ***B 07C 5/342*** | EP 2328693* | METHOD FOR AUTOMATICALLY IDENTIFYING A MATERIAL OR AN OBJECT |
| Hari, IN | ***H 04L 12/28***<br>***H 04L 12/46*** | EP 2342868* | INTEGRATING PLURALITY OF BUILDING MANAGEMENT SERVICES AND HOME AUTOMATION SERVICES WITH PLURALITY OF MULTI-PLAY SERVICES ON NEUTRAL ACCESS NETWORK OPERATION BASIS |
| Hemcon Medical Technologies, US | ***B 01L 3/00*** | EP 2323767* | APPARATUS AND METHODS FOR MAKING, STORING, AND ADMINISTERING FREEZE-DRIED MATERIALS SUCH AS FREEZE-DRIED PLASMA |
| Hemcon Medical Technologies, US | ***F 26B 5/06*** | EP 2338016* | APPARATUS AND METHODS FOR MAKING, STORING, AND ADMINISTERING FREEZE-DRIED MATERIALS SUCH AS FREEZE-DRIED PLASMA |
| Hitachi Chemical Company, JP | ***G 03F 7/037***<br>***C 09J 7/00***<br>***C 09J 179/08***<br>***G 03F 7/004*** | EP 2333609 | Photosensitive adhesive composition, and obtained using the same, adhesive film, adhesive sheet, semiconductor wafer with adhesive layer, semiconductor device and electronic part |
| Hitachi Chemical Company, JP | ***H 01R 11/01***<br>***C 09J 9/02***<br>***C 09J 11/08***<br>***C 09J 201/00***<br>***H 01B 1/22***<br>***H 05K 1/14***<br>***H 05K 3/36*** | EP 2339695 | Circuit connecting material, connection structure for circuit member using the same and production method thereof |
| Hyperthermics Holding AS, NO | ***C 12P 3/00***<br>***C 12P 5/02***<br>***C 12P 7/06***<br>***C 12P 7/54*** | EP 2342346* | ENERGY PRODUCTION WITH HYPERTHERMOPHILIC ORGANISMS |
| Ibd Column Therapies International AB, SE | ***C 07K 14/52***<br>***A 61M 1/36***<br>***B 01J 20/32*** | EP 2331568* | TREATING INFLAMMATORY CONDITIONS |
| ICOPAL A/S, DK | ***E 04D 13/17***<br>***E 04D 13/14*** | EP 2253772 | A venting device |
| ID Biomedical Corporation of Quebec, CA | ***C 07K 19/00***<br>***A 61K 39/155***<br>***A 61K 39/385***<br>***A 61P 31/14***<br>***A 61P 37/04***<br>***C 07K 14/135***<br>***C 12N 15/44***<br>***C 12N 15/62*** | EP 2324062* | CHIMERIC RESPIRATORY SYNCYTIAL VIRUS POLYPEPTIDE ANTIGENS |
| IDENIX Pharmaceuticals, US | ***C 07F 9/6561***<br>***A 61K 31/675*** | EP 2256124 | Phospho-indoles as HIV inhibitors |
| IHARA CHEMICAL INDUSTRY CO., JP | ***C 07D 239/52***<br>***A 01N 43/54***<br>***A 01P 13/02*** | EP 2343283 | OPTICALLY ACTIVE DIFLUOROMETHANESULFONANILIDE DERIVATIVE AND HERBICIDE |
| ILT Productions AB, SE | ***G 06F 17/30*** | EP 2342663* | DISTRIBUTED DATA STORAGE |
| IMEC,BE; | H 01L 21/768 | EP 1577939 | Method of manufacturing a semiconductor device having damascene structures with air gaps |
| IMEC,BE; | H 01L 21/768 | EP 1577940 | Method of manufacturing a semiconductor device having damascene structures with air gaps |
| Immatics Biotechnologies GmbH, DE | ***C 07K 14/47***<br>***A 61K 39/00*** | EP 2138509 | Tumor-associated peptide binding promiscuously to human leukocyte antigen (HLA) class II molecules |

| (71) | (51) | Broj objave evropske prijave patenta | (54) |
|---|---|---|---|
| Immatics Biotechnologies GmbH, DE | ***A 61K 39/00***<br>***A 61P 35/00***<br>***A 61K 38/08***<br>***A 61K 38/16*** | EP 2331118* | COMPOSITION OF TUMOR-ASSOCIATED PEPTIDES AND RELATED ANTI-CANCER VACCINE FOR THE TREATMENT OF GLIOBLASTOMA (GBM) AND OTHER CANCERS |
| Immatics Biotechnologies GmbH, DE | ***C 07K 14/47***<br>***A 61K 39/00*** | EP 2338907 | Novel immunogenic epitopes for immunotherapy |
| Immatics Biotechnologies GmbH, DE | ***A 61K 39/00***<br>***A 61P 35/00***<br>***A 61K 38/08***<br>***A 61K 38/16*** | EP 2341927* | NOVEL IMMUNOTHERAPY AGAINST SEVERAL TUMORS INCLUDING NEURONAL AND BRAIN TUMORS |
| Immersion Corporation, US | ***H 04M 1/725***<br>***G 06F 3/01***<br>***G 06F 3/048*** | EP 2327201* | SYSTEMS AND METHODS FOR TRANSMITTING HAPTIC MESSAGES |
| Immersion Corporation, US | ***G 06F 3/01***<br>***G 06F 3/048***<br>***H 04M 1/725*** | EP 2329339* | SYSTEMS AND METHODS FOR SHIFTING HAPTIC FEEDBACK FUNCTION BETWEEN PASSIVE AND ACTIVE MODES |
| Immersion Corporation, US | ***H 04M 1/725***<br>***G 06F 3/01***<br>***G 06F 3/048*** | EP 2329636* | SYSTEMS AND METHODS FOR HAPTIC MESSAGE TRANSMISSION |
| Immersion Corporation, US | ***H 04M 1/725***<br>***G 06F 3/01***<br>***G 06F 3/048*** | EP 2329637* | SYSTEMS AND METHODS FOR MAPPING MESSAGE CONTENTS TO VIRTUAL PHYSICAL PROPERTIES FOR VIBROTACTILE MESSAGING |
| Immersion Corporation, US | ***G 06F 3/01***<br>***G 06F 3/041*** | EP 2342615* | MULTIPLE ACTUATION HANDHELD DEVICE |
| Immuneregen Biosciences, US | ***C 07K 5/00***<br>***A 61K 38/16*** | EP 2125869* | SUBSTANCE P AND ANALOGS THEREOF AS AN IMMUNOGENIC COMPOSITION ADJUVANT |
| Inbio Prof. Jürgen Büddefeld Dr. Peter Klauth, DE | ***G 01N 33/533***<br>***G 01N 33/58***<br>***C 07K 1/13***<br>***C 09K 11/77***<br>***G 01N 21/64*** | EP 2326955* | METHOD FOR MARKING AND/OR IDENTIFYING BIOMOLECULES |
| Incorporated Administrative Agency National, JP | ***C 12N 1/20***<br>***C 05F 17/00***<br>***C 05G 5/00*** | EP 2333046 | METHOD FOR PRODUCTION OF SEED MATERIAL FOR MICROORGANISMS OPTIMIZED AS CATALYST FOR PARALLEL COMPLEX MINERALIZATION REACTION |
| Incorporated Administrative Agency National, JP | ***C 12N 11/00***<br>***A 01G 1/00***<br>***A 01G 31/00***<br>***B 09B 3/00***<br>***C 05F 1/00***<br>***C 05F 3/00***<br>***C 05F 5/00***<br>***C 05F 7/00***<br>***C 05F 9/00***<br>***C 05F 17/00*** | EP 2333057 | SOLID SUPPORT COMPRISING MICROORGANISMS CAPABLE OF CONDUCTING PARALLEL MULTIPLE MINERALIZATION IMMOBILIZED THEREON, CATALYST COLUMN AND METHOD FOR PRODUCING SOLID MEDIUM FOR CULTIVATING PLANTS |
| Iniziativa Otto S.r.l., IT | ***B 28B 11/24*** | EP 2266769 | A process for manufacturing very slim ceramic tiles |
| Innovative Bau GmbH, AT | ***E 04B 2/70***<br>***B 28B 19/00*** | EP 1826330 | Method for manufacturing a prefabricated wall element |
| INPEX Corporation,JP; | ***C 10G 2/00*** | EP 2336269 | SYSTEM FOR SEPARATING CATALYST |
| INPEX Corporation,JP; | ***C 10G 2/00*** | EP 2336270 | METHOD FOR SYNTHESIZING LIQUID FUEL AND APPARATUS FOR SYNTHESIZING LIQUID FUEL |
| INPEX Corporation,JP; | ***C 10G 2/00*** | EP 2336271 | UNIT FOR HYDROCARBON COMPOUND SYNTHESIS REACTION AND METHOD OF OPERATING SAME |

| (71) | (51) | Broj objave evropske prijave patenta | (54) |
|---|---|---|---|
| Intercell AG, AT | ***C 07K 14/26***<br>***C 07K 16/12***<br>***A 61K 39/395***<br>***A 61P 31/04*** | EP 2338902 | Klebsiella antigens |
| Interface, US | ***D 06N 7/00***<br>***A 47G 27/04*** | EP 2331744* | LOW WEIGHT CARPET AND CARPET TILE AND METHODS OF MANUFACTURE, SIZING AND INSTALLATION |
| Intermune, US | ***A 61K 31/4412***<br>***A 61P 11/00*** | EP 2324831 | Methods of administering pirfenidone therapy |
| Intermune, US | ***A 61K 31/4412***<br>***A 61P 11/00*** | EP 2343070 | Pirfenidone treatment for patients with atypical liver function |
| Ipsen Manufacturing Ireland Limited, IE | ***A 61K 38/00*** | EP 2334316* | PROCESS FOR THE SYNTHESIS OF (AIB8,35)HGLP-1(7-36)-NH2 |
| IPSEN PHARMA S.A.S., FR | ***A 61K 38/00*** | EP 2323678* | GLUCOSE-DEPENDENT INSULINOTROPIC POLYPEPTIDE ANALOGUES |
| IPSEN PHARMA S.A.S., FR | ***C 07K 14/62***<br>***C 07K 14/46*** | EP 2328922* | ANALOGUES OF GLUCOSE-DEPENDENT INSULINOTROPIC POLYPEPTIDE |
| Iris-Forskningsinvest AS,NO; | ***E 21B 43/00***<br>***E 21B 43/24***<br>***E 21B 43/243***<br>***E 21B 41/00***<br>***C 09K 8/00***<br>***C 10G 47/00*** | EP 2334898* | PROCESS FOR GENERATING HYDROGEN |
| Ironwood Pharmaceuticals, US | ***A 61K 9/16***<br>***A 61K 9/48***<br>***A 61K 9/20***<br>***A 61K 9/50***<br>***A 61K 38/00*** | EP 2331077* | STABLE FORLULATION COMPRISING THERAPEUTIC POLYPEPTIDES FOR ORAL ADMINISTRATION |
| Ironwood Pharmaceuticals, US | ***A 61K 9/20***<br>***A 61K 9/48***<br>***A 61K 38/00***<br>***A 61K 47/02***<br>***A 61K 47/18*** | EP 2341898* | STABLE SOLID FORMULATIONS OF GC-C RECEPTOR AGONIST POLYPEPTIDES SUITABLE FOR ORAL ADMINISTRATION |
| Ironwood Pharmaceuticals,US; | ***A 61K 38/00***<br>***A 61K 9/50***<br>***A 61K 9/16***<br>***A 61K 9/20***<br>***A 61K 9/48*** | EP 2328601* | LINACLOTIDE-CONTAINING FORMULATIONS FOR ORAL ADMINISTRATION |
| i-Sens, KR | ***G 01N 27/26***<br>***G 06K 7/10***<br>***G 01N 35/00***<br>***A 61B 5/145***<br>***B 01L 3/00*** | EP 2126556* | ELECTROCHEMICAL BIOSENSOR MEASURING SYSTEM |
| ISHIHARA SANGYO KAISHA, JP | ***A 01P 3/00***<br>***A 01N 59/02***<br>***A 01N 43/40***<br>***A 01N 43/42***<br>***A 01N 43/56***<br>***A 01N 43/78***<br>***A 01N 43/90***<br>***A 01N 43/653***<br>***A 01N 47/44***<br>***A 01N 47/24***<br>***A 01N 47/14***<br>***A 01N 37/06*** | EP 2323487* | FUNGICIDAL COMPOSITION AND METHOD FOR CONTROLLING PLANT DISEASES |
| ISIS Innovation Limited, GB | ***C 07K 16/28***<br>***A 61K 39/395***<br>***A 61P 37/06*** | EP 2342228* | PD-1 SPECIFIC ANTIBODIES AND USES THEREOF |

| (71) | (51) | Broj objave evropske prijave patenta | (54) |
|---|---|---|---|
| Isis Pharmaceuticals, US | ***A 61K 48/00*** | EP 2331141* | ANTISENSE OLIGONUCLEOTIDES DIRECTED AGAINST CONNECTIVE TISSUE GROWTH FACTOR AND USES THEREOF |
| Isis Pharmaceuticals, US | ***A 61K 38/18*** | EP 2334319* | METHOD FOR REDUCING SCARRING DURING WOUND HEALING USING ANTISENSE COMPOUNDS DIRECTED TO CTGF |
| ITT Manufacturing Enterprises, US | ***H 02K 21/46***<br>***H 02K 1/27*** | EP 2340600* | A MIXER ASSEMBLY |
| IVF Zentren Prof. Zech Bregenz GmbH, AT | ***A 01N 1/02*** | EP 2337449* | METHOD AND INSTRUMENT FOR VITRIFICATION AND STORING OF BIOLOGICAL SPECIMEN |
| Jacob,IN; | ***F 24D 13/02***<br>***E 04C 2/52***<br>***F 28F 21/04*** | EP 2338005* | A STONE PANEL |
| Janssen Pharmaceutica NV, BE | ***C 07D 215/22***<br>***C 07D 401/06***<br>***C 07D 401/10***<br>***C 07D 405/06***<br>***C 07D 405/10***<br>***C 07D 409/10***<br>***A 61K 31/435***<br>***A 61P 31/00*** | EP 2099760* | ANTIBACTERIAL QUINOLINE DERIVATIVES |
| Janssen Pharmaceutica, BE | ***A 01N 59/00***<br>***A 01N 59/06***<br>***A 01N 59/08***<br>***A 01N 59/16***<br>***A 61K 33/00*** | EP 2323485* | ANTI-ALLERGEN COMBINATIONS OF CALCIUM AND LANTHANUM SALTS |
| Janssen Pharmaceutica, BE | ***C 07D 319/20***<br>***A 61K 31/357***<br>***A 61P 25/18***<br>***A 61P 25/24*** | EP 2326635* | NOVEL SUBSTITUTED SULFAMIDE DERIVATIVES |
| Janssen Pharmaceutica, BE | ***C 07D 319/20*** | EP 2340246* | CRYSTALLINE FORM OF (2S)-(-)-N-(6-CHLORO-2,3-DIHYDRO-BENZO[1,4]DIOXIN-2-YLMETHYL)-SULFAMIDE |
| Janssen Pharmaceutica,BE; | ***C 07H 7/04***<br>***C 07H 13/04***<br>***C 07C 1/00*** | WO 2010043682 | PROCESS FOR THE PREPARATION OF COMPOUNDS USEFUL AS INHIBITORS OF SGLT |
| Janssen Pharmaceutica,BE; | ***C 07D 409/06***<br>***A 61K 31/381***<br>***A 61P 3/00*** | EP 2099791* | THIENYL-CONTAINING GLYCOPYRANOSYL DERIVATIVES AS ANTIDIABETICS |
| Japan Oil,JP; | ***C 10G 2/00*** | EP 2336269 | SYSTEM FOR SEPARATING CATALYST |
| Japan Oil,JP; | ***C 10G 2/00*** | EP 2336270 | METHOD FOR SYNTHESIZING LIQUID FUEL AND APPARATUS FOR SYNTHESIZING LIQUID FUEL |
| Japan Oil,JP; | ***C 10G 2/00*** | EP 2336271 | UNIT FOR HYDROCARBON COMPOUND SYNTHESIS REACTION AND METHOD OF OPERATING SAME |
| Japan Petroleum Exploration Co.,JP; | ***C 10G 2/00*** | EP 2336269 | SYSTEM FOR SEPARATING CATALYST |
| Japan Petroleum Exploration Co.,JP; | ***C 10G 2/00*** | EP 2336270 | METHOD FOR SYNTHESIZING LIQUID FUEL AND APPARATUS FOR SYNTHESIZING LIQUID FUEL |
| Japan Petroleum Exploration Co.,JP; | ***C 10G 2/00*** | EP 2336271 | UNIT FOR HYDROCARBON COMPOUND SYNTHESIS REACTION AND METHOD OF OPERATING SAME |
| Japan Tobacco, JP | ***G 06Q 50/00***<br>***G 06K 17/00*** | EP 2333715 | DISPLAY SUPPORT SYSTEM |

| (71) | (51) | Broj objave evropske prijave patenta | (54) |
|---|---|---|---|
| Johannes Gutenberg-Universität Mainz, DE | ***C 07K 16/30*** | EP 2342234* | MONOCLONAL ANTIBODIES FOR TREATMENT OF CANCER |
| John Mezzalingua Associates, US | ***H 01R 39/64*** | EP 2339703 | Test point adaptor for coaxial cable connections |
| JX Nippon Oil & Energy Corporation,JP; | ***C 10G 2/00*** | EP 2336269 | SYSTEM FOR SEPARATING CATALYST |
| JX Nippon Oil & Energy Corporation,JP; | ***C 10G 2/00*** | EP 2336270 | METHOD FOR SYNTHESIZING LIQUID FUEL AND APPARATUS FOR SYNTHESIZING LIQUID FUEL |
| JX Nippon Oil & Energy Corporation,JP; | ***C 10G 2/00*** | EP 2336271 | UNIT FOR HYDROCARBON COMPOUND SYNTHESIS REACTION AND METHOD OF OPERATING SAME |
| Kaneka Corporation, JP | ***C 08L 101/10***<br>***C 08K 5/09***<br>***C 08K 5/17***<br>***C 08K 5/521***<br>***C 09J 201/10***<br>***C 09K 3/10*** | EP 2341106 | CURABLE COMPOSITION AND CURED PRODUCT THEREOF |
| Kaspersky Lab, RU | ***G 06F 21/00*** | EP 2284750 | System and method for detecting obfuscated malware using code normalization |
| Kaspersky Lab, RU | ***G 06F 21/00*** | EP 2309408 | Method and system for detection and prediction of computer virus-related epidemics |
| Kassmannhuber,AT; | ***E 06B 1/62*** | EP 2093368 | Reveal connection profile for components bordering plaster |
| KNC NER Acquisition Sub, US | ***A 61K 31/765*** | EP 2334305* | BIOADHESIVE CONSTRUCTS |
| Knopp Neurosciences, US | ***A 01N 43/78***<br>***A 61K 31/425*** | EP 2334185* | COMPOSITIONS AND METHODS OF USING (R)-PRAMIPEXOLE |
| Konruns Pharmaceutical Co., CN | ***C 12N 9/64***<br>***A 61K 38/43***<br>***A 61K 9/19***<br>***A 61K 9/12***<br>***A 61K 9/70***<br>***A 61P 7/04*** | EP 2343370 | A THROBIN-LIKE ENZYME OF AGKISTRODON ACUTUS |
| Kösedag Tel Örme Sanayi Ve, TR | ***B 21F 25/00***<br>***G 08B 13/12*** | EP 2251116 | Barbed tape with sensor conductor and reinforcement wire |
| Krka Tovarna Zdravil, SI | ***C 07D 405/14***<br>***A 61K 31/41***<br>***A 61P 9/12*** | EP 2334668* | PROCESS FOR PREPARING OLMESARTAN MEDOXOMIL INTERMEDIATE |
| KRKA, SI | ***A 61K 9/20***<br>***A 61K 9/28***<br>***A 61K 31/427*** | EP 2120883* | PHARMACEUTICAL COMPOSITION COMPRISING A SALT OF ROSIGLITAZONE |
| KRKA, SI | ***A 61K 9/22***<br>***A 61K 9/28***<br>***A 61K 31/404*** | EP 2323634* | ROPINIROLE COMPOSITION |
| KRKA, SI | ***A 61K 9/22***<br>***A 61K 9/28***<br>***A 61K 9/48***<br>***A 61K 31/517*** | EP 2326312* | PALIPERIDONE COMPOSITION COMPRISING SOLID MATRIX PARTICLES |
| KRKA, SI | ***A 61K 9/50*** | EP 2331083* | PROLONGED RELEASE MULTIPARTICULATE PHARMACEUTICAL COMPOSITION COMPRISING PALIPERIDONE |
| KSP Italia S.r.l., IT | ***B 62B 5/02*** | EP 2256014 | Mobile stairlift device |
| Kuhn-Huard S.A., FR | ***A 01B 3/42***<br>***A 01B 3/46*** | EP 2238818 | Reversible plough with a device for reducing the pressure |
| Kumiai Chemical Industry CO.,JP; | ***C 07D 239/52***<br>***A 01N 43/54***<br>***A 01P 13/02*** | EP 2343283 | OPTICALLY ACTIVE DIFLUOROMETHANESULFONANILIDE DERIVATIVE AND HERBICIDE |

| (71) | (51) | Broj objave evropske prijave patenta | (54) |
|---|---|---|---|
| Kyorin Pharmaceutical Co., JP | ***C 07F 9/09***<br>***A 61K 31/661***<br>***A 61P 1/04***<br>***A 61P 1/16***<br>***A 61P 3/10***<br>***A 61P 7/02***<br>***A 61P 9/04***<br>***A 61P 9/10***<br>***A 61P 11/00***<br>***A 61P 11/02***<br>***A 61P 11/06***<br>***A 61P 13/12***<br>***A 61P 17/00***<br>***A 61P 17/02***<br>***A 61P 21/04***<br>***A 61P 25/00***<br>***A 61P 27/14***<br>***A 61P 29/00***<br>***A 61P 31/04***<br>***A 61P 35/00***<br>***A 61P 37/02*** | EP 2058317 | AMINOPHOSPHORIC ACID ESTER DERIVATIVE AND S1P RECEPTOR MODULATOR CONTAINING THE SAME AS ACTIVE INGREDIENT |
| Labopharm (Barbados) Limited, BB | ***C 08L 3/02***<br>***A 61K 47/36***<br>***A 61K 9/14***<br>***C 08J 3/12***<br>***C 08J 3/20***<br>***C 12N 11/10***<br>***C 12N 1/20*** | EP 2331629* | STARCH-BASED MICROPARTICLES FOR THE RELEASE OF AGENTS DISPOSED THEREIN |
| Labopharm Europe Limited,IE; | ***C 08L 3/02***<br>***A 61K 47/36***<br>***A 61K 9/14***<br>***C 08J 3/12***<br>***C 08J 3/20***<br>***C 12N 11/10***<br>***C 12N 1/20*** | EP 2331629* | STARCH-BASED MICROPARTICLES FOR THE RELEASE OF AGENTS DISPOSED THEREIN |
| Labopharm Inc.,CA; | ***C 08L 3/02***<br>***A 61K 47/36***<br>***A 61K 9/14***<br>***C 08J 3/12***<br>***C 08J 3/20***<br>***C 12N 11/10***<br>***C 12N 1/20*** | EP 2331629* | STARCH-BASED MICROPARTICLES FOR THE RELEASE OF AGENTS DISPOSED THEREIN |
| Lambert,FR; | ***B 07C 5/342*** | EP 2328693* | METHOD FOR AUTOMATICALLY IDENTIFYING A MATERIAL OR AN OBJECT |
| Lesaffre et Compagnie, FR | ***C 12N 1/18***<br>***C 12R 1/865*** | EP 2329008* | NOVEL YEAST STRAINS FOR PRODUCING ALCOHOL |
| Leyden Energy, US | ***H 02H 7/18***<br>***H 02J 7/04***<br>***H 01M 10/44***<br>***G 01K 13/00*** | EP 2342791* | ELECTRONIC CURRENT INTERRUPT DEVICE FOR BATTERY |
| Live Data Systems, US | ***G 06F 11/30*** | EP 2062140* | SYSTEM AND METHOD FOR MONITORING AND MANAGING ENERGY PERFORMANCE |
| Logomotion, SK | ***H 01Q 7/06***<br>***H 01Q 1/22***<br>***G 06K 19/077*** | EP 2329563* | REMOVABLE CARD FOR A CONTACTLESS COMMUNICATION, ITS UTILIZATION AND THE METHOD OF PRODUCTION |
| Los Alamos National Security,US; | ***A 01H 5/00***<br>***C 12N 15/82***<br>***C 12N 5/10*** | EP 2328405* | PLANT GLUTAMINE PHENYLPYRUVATE TRANSAMINASE GENE AND TRANSGENIC PLANTS CARRYING SAME |

| (71) | (51) | Broj objave evropske prijave patenta | (54) |
|---|---|---|---|
| Los Alamos National Security,US; | ***A 01H 5/00*** | EP 2334166* | TRANSGENIC PLANTS WITH ENHANCED GROWTH CHARACTERISTICS |
| Magotteaux International SA, BE | ***B 02C 13/28*** | EP 2323770* | COMPOSITE IMPACTOR FOR PERCUSSION CRUSHERS |
| Magotteaux International SA, BE | ***C 22C 1/05***<br>***B 02C 2/00*** | EP 2326738* | MILLING CONE FOR A COMPRESSION CRUSHER |
| Magotteaux International SA, BE | ***C 22C 1/05***<br>***E 02F 9/28*** | EP 2329052* | COMPOSITE TOOTH FOR WORKING THE GROUND OR ROCK |
| Magotteaux International SA, BE | ***C 22C 1/05*** | EP 2334836* | HIERARCHICAL COMPOSITE MATERIAL |
| Maine Institute For Human Genetics And Health, US | ***C 12Q 1/68***<br>***C 12P 19/34***<br>***C 07H 21/00*** | EP 2326730* | MICRO RNA (MIRNA) AND NEUROFIBROMATOSIS TYPE 1 : A ROLE IN DIAGNOSIS AND THERAPY |
| Martek Biosciences Corporation, US | ***A 61K 31/22***<br>***C 07C 53/00***<br>***A 61P 25/00***<br>***A 61P 29/00*** | EP 2120920* | OXYLIPINS FROM LONG CHAIN POLYUNSATURATED FATTY ACIDS AND METHODS OF MAKING AND USING THE SAME |
| Masytec A/S, DK | ***B 41J 2/175*** | EP 2216180 | A system for supplying ink to a printing machine |
| McDonald, NZ | A 61C 5/12 | EP 1541092 | A matrix band retainer |
| Meccanica Generale S.R.L., IT | ***D 06F 37/26*** | EP 2129823* | WASHING MACHINE TANK PROVIDED WITH EXTERNAL REINFORCING CAP ON BOTTOM WALL |
| Medicart International Limited, GB | ***A 61B 19/02*** | EP 2339982* | MEDICAL EQUIPMENT STORAGE AND TRANSPORTATION KIT |
| Medivir AB, SE | ***C 07D 491/048***<br>***A 61K 31/496***<br>***A 61P 19/00*** | EP 2331548* | PROTEASE INHIBITORS |
| Meijn Food Processing Technology B.V., NL | ***A 22C 21/00***<br>***A 22C 21/06*** | EP 2248429 | Apparatus and method for conveying organ packages to a processing station |
| Merck Serono SA, CH | ***C 07K 14/54*** | EP 2325201 | Use of il-6-type Cytokines for maturation of Oocytes |
| Merck Sharp & Dohme Corp., US | ***A 01N 37/18*** | EP 2326172* | ANTIFUNGAL AGENTS |
| Merial Limited,US; | ***A 61K 9/00***<br>***A 61K 47/34*** | EP 2326304* | METHODS FOR ENHANCING THE STABILITY OF POLYORTHOESTERS AND THEIR FORMULATIONS |
| Merisant Company, US | ***A 23L 1/236*** | EP 2334203* | SWEETENER COMPOSITIONS COMPRISING REBAUDIOSIDE A, ERYTHRITOL, A DISACCHARIDE CARBOHYDRATE OR FRUCTOSE AND A TASTE-IMPROVING AMOUNT OF CELLULOSE, AND METHODS FOR THEIR MANUFACTURE |
| Merz Pharma GmbH & Co. KGaA, DE | ***C 07C 231/08***<br>***C 07C 233/03*** | EP 2331495* | PROCESS FOR MANUFACTURING ADAMANTANE DERIVATIVES WITH HIGH YIELD |
| Merz Pharma GmbH & Co. KGaA, DE | ***C 07K 14/33*** | EP 2337790* | CLOSTRIDIAL NEUROTOXINS WITH ALTERED PERSISTENCY |
| MICHELIN Recherche et Technique S.A., CH | ***H 02K 1/16***<br>***H 02K 1/18***<br>***H 02K 1/20*** | EP 2332232* | STATOR FOR ROTARY ELECTRIC MACHINE AND METHOD FOR MAKING SAME |
| Mick, AT | ***E 06B 1/62*** | EP 2093368 | Reveal connection profile for components bordering plaster |
| Micromet AG, DE | ***C 07K 16/28***<br>***C 07K 16/46*** | EP 2342227* | TREATMENT OF ACUTE LYMPHOBLASTIC LEUKEMIA |
| Mihranyan, SE | ***C 08F 8/12***<br>***C 08F 218/08***<br>***A 61K 9/00*** | EP 2331587* | VINYL ALCOHOL CO-POLYMER CRYOGELS, VINYL ALCOHOL CO-POLYMERS, AND METHODS AND PRODUCTS THEREOF |

| (71) | (51) | Broj objave evropske prijave patenta | (54) |
|---|---|---|---|
| Millennium Pharmaceuticals, US | ***C 07D 487/04***<br>***A 61K 31/55***<br>***A 61P 35/00*** | EP 2086981* | COMPOUNDS FOR INHIBITING MITOTIC PROGRESSION |
| Mimaki Engineering Co., JP | ***B 41J 2/01*** | EP 2233292 | INKJET PRINTER AND PRINTING METHOD USING SAME |
| Mimaki Engineering Co., JP | ***B 41J 2/175*** | EP 2233297 | INK SUPPLY DEVICE FOR INKJET PRINTER, AND REVERSE FLOW BLOCKING DEVICE FOR SAME |
| Mimaki Engineering Co., JP | ***B 41J 11/66***<br>***B 41J 2/01***<br>***B 41J 3/54*** | EP 2233305 | PRINTER-PLOTTER |
| Mitsubishi Tanabe Pharma Corporation, JP | ***C 07H 7/04***<br>***C 07H 13/04***<br>***C 07C 1/00*** | WO 2010043682 | PROCESS FOR THE PREPARATION OF COMPOUNDS USEFUL AS INHIBITORS OF SGLT |
| Mitsubishi Tanabe Pharma Corporation, JP | ***C 07D 409/06***<br>***A 61K 31/381***<br>***A 61P 3/00*** | EP 2099791* | THIENYL-CONTAINING GLYCOPYRANOSYL DERIVATIVES AS ANTIDIABETICS |
| Modern Body Engineering Corporation, US | ***B 21D 39/02***<br>***B 21D 39/00***<br>***B 62D 65/06*** | EP 2326438* | APPARATUS AND METHOD TO CRADLE AND HEM PANELS AT AN ASSEMBLY-LINE STATION |
| Morrell, CA | ***B 65D 88/12***<br>***B 65D 88/06***<br>***B 01D 21/02***<br>***C 02F 1/00*** | EP 2204340 | Portable tank apparatus and method of use |
| Mount Sinai School of Medicine, US | ***A 61K 39/00***<br>***A 61K 39/15***<br>***A 61K 39/17***<br>***A 61K 39/145*** | EP 2251034 | Chimeric Newcastle Disease viruses presenting non-native surface proteins and uses thereof |
| MSD Consumer Care, US | ***A 43B 7/22***<br>***A 43B 17/02*** | EP 2063730* | CUSHIONED ORTHOTIC |
| MSD Consumer Care, US | ***A 61K 31/137***<br>***A 61K 31/4164***<br>***A 61P 31/10*** | EP 2124914* | METHOD AND SYSTEM FOR ENHANCING SELF-TREATMENT OF ONYCHOMYCOSIS |
| Multiprojekt Kft.,HU; | ***B 64F 5/00***<br>***E 04G 1/36*** | EP 2138402 | Variable modular docking system |
| Nano CMS Co., KR | ***C 23C 18/44*** | EP 2253736 | Method for electroless deposition of nano metallic silver and reflector of high reflectance deposited by nano metallic silver using the same |
| Napo Pharmaceuticals, US | ***A 61K 31/47*** | EP 2241318 | Method for treatment of constipation-predominant irritable bowel syndrome |
| National University of Ireland, IE | ***A 61F 2/01***<br>***A 61F 2/82***<br>***A 61F 2/00***<br>***A 61F 2/02***<br>***A 61F 2/84*** | EP 2241284 | Intravasculature devices and balloons for use therewith |
| Naurex, US | ***C 07K 16/00*** | EP 2331571* | NMDA RECEPTOR MODULATORS AND USES THEREOF |
| Nektar Therapeutics, US | ***A 61K 47/48*** | EP 2323695* | COMPLEXES OF SMALL-INTERFERING NUCLEIC ACIDS |
| Nektar Therapeutics, US | ***A 61K 47/48*** | EP 2326351* | CONJUGATES OF SMALL-INTERFERING NUCLEIC ACIDS |
| Nektar Therapeutics, US | ***A 61K 47/48*** | EP 2331139* | POLYMERIC ALPHA-HYDROXY ALDEHYDE AND KETONE REAGENTS AND CONJUGATION METHOD |
| Nektar Therapeutics, US | ***A 61K 47/48***<br>***A 61P 35/00*** | EP 2331140* | MULTI-ARM POLYMERIC ALKANOATE CONJUGATES |
| Nektar Therapeutics, US | ***A 61K 47/48***<br>***C 07K 14/47***<br>***A 61P 31/04*** | EP 2334333* | POLYMER CONJUGATES OF V681-LIKE PEPTIDES |

| (71) | (51) | Broj objave evropske prijave patenta | (54) |
|---|---|---|---|
| Nektar Therapeutics, US | ***A 61K 47/48*** | EP 2334334* | POLYMER CONJUGATES OF NESIRITIDE PEPTIDES |
| Nektar Therapeutics, US | ***A 61K 47/48***<br>***C 07K 14/575*** | EP 2334335* | POLYMER CONJUGATES OF CD-NP PEPTIDES |
| Nektar Therapeutics, US | ***A 61K 47/48***<br>***C 07K 14/575*** | EP 2334336* | POLYMER CONJUGATES OF OSTEOCALCIN PEPTIDES |
| Nektar Therapeutics, US | ***A 61K 47/48***<br>***C 07K 7/06*** | EP 2334337* | POLYMER CONJUGATES OF OPIOID GROWTH FACTOR PEPTIDES |
| Nektar Therapeutics, US | ***A 61K 47/48***<br>***C 07K 14/62*** | EP 2334338* | POLYMER CONJUGATES OF C-PEPTIDES |
| Nektar Therapeutics, US | ***A 61K 47/48***<br>***C 07K 14/605*** | EP 2337585* | POLYMER CONJUGATES OF GLP-2-LIKE PEPTIDES |
| Nektar Therapeutics, US | ***A 61K 47/48***<br>***A 61P 25/04***<br>***A 61P 25/36*** | EP 2340044* | PEGYLATED OPIOIDS WITH LOW POTENTIAL FOR ABUSE |
| Nektar Therapeutics, US | ***A 61K 47/48***<br>***C 07K 7/08***<br>***A 61P 31/04*** | EP 2340045* | POLYMER CONJUGATES OF PROTEGRIN PEPTIDES |
| Nektar Therapeutics, US | ***A 61K 47/48***<br>***C 07K 14/435***<br>***A 61P 25/04*** | EP 2340046* | POLYMER CONJUGATES OF ZICONOTIDE PEPTIDES |
| Nektar Therapeutics, US | ***A 61K 47/48***<br>***C 07K 14/47*** | EP 2340047* | POLYMER CONJUGATES OF KISS1 PEPTIDES |
| Nektar Therapeutics, US | ***A 61K 47/48***<br>***C 07K 5/10***<br>***C 07K 7/02*** | EP 2340048* | POLYMER CONJUGATES OF BIPHALIN PEPTIDES |
| Nektar Therapeutics, US | ***A 61K 47/48***<br>***C 07K 14/61*** | EP 2340050* | POLYMER CONJUGATES OF AOD-LIKE PEPTIDES |
| Nektar Therapeutics, US | ***A 61K 47/48*** | EP 2341942* | POLYMER CONJUGATES OF THERAPEUTIC PEPTIDES |
| Nestec S.A., CH | ***A 61K 38/40***<br>***A 23L 1/29***<br>***A 23L 1/305***<br>***A 23J 1/20***<br>***A 23C 9/152***<br>***A 23C 19/05***<br>***A 23C 23/00***<br>***A 61P 1/00*** | EP 2251029 | Lactoferrin and gut neuronal health in adults and/or elderly |
| Nestec S.A., CH | ***A 61K 38/40***<br>***A 23L 1/29***<br>***A 23L 1/305***<br>***A 23J 1/20***<br>***A 23C 19/05***<br>***A 23C 9/152***<br>***A 23C 23/00***<br>***A 61P 25/28*** | EP 2251030 | Lactoferrin and brain health and development in infants |
| Neubourg Skin Care GmbH & Co. KG, DE | ***A 61K 8/04***<br>***A 61K 8/06***<br>***A 61K 8/81*** | EP 2335675 | Emulsifier-free, polymer stabilised foam formulas |
| New York Society for the Ruptured and Crippled, US | ***A 61F 2/38*** | EP 2066266* | POSTERIOR STABILIZED KNEE PROSTHESIS |
| Newthex Ned. B.v., NL | ***B 63B 19/00***<br>***B 63B 19/14***<br>***B 63B 19/24***<br>***B 63B 43/32*** | EP 2331392* | LOCKING ELEMENT AND LOCKING SYSTEM FOR A SHIP'S DOOR, SHIP'S WINDOW OR SHIP'S HATCH |

| (71) | (51) | Broj objave evropske prijave patenta | (54) |
|---|---|---|---|
| Nippon Soda Co., JP | ***C 07D 261/04***<br>***A 01N 43/80***<br>***A 01P 7/02***<br>***A 01P 7/04***<br>***C 07D 413/04***<br>***C 07D 413/06***<br>***C 07D 413/10*** | EP 2332927 | NITROGEN-CONTAINING HETEROCYCLIC COMPOUND AND PEST CONTROL AGENT |
| Nippon Steel Engineering Co., JP | ***C 10G 2/00*** | EP 2336269 | SYSTEM FOR SEPARATING CATALYST |
| Nippon Steel Engineering Co., JP | ***C 10G 2/00*** | EP 2336270 | METHOD FOR SYNTHESIZING LIQUID FUEL AND APPARATUS FOR SYNTHESIZING LIQUID FUEL |
| Nippon Steel Engineering Co., JP | ***C 10G 2/00*** | EP 2336271 | UNIT FOR HYDROCARBON COMPOUND SYNTHESIS REACTION AND METHOD OF OPERATING SAME |
| NIPRO CORPORATION, JP | ***A 61K 9/14***<br>***A 61K 9/26*** | EP 1980244 | Basis particles and orally-disintegrating tablet containing them |
| Nobel Biocare Services AG, CH | ***G 06F 19/00*** | EP 2254068 | Method and system providing improved data matching for virtual planning |
| Northwestern University,US; | ***A 61K 38/18*** | EP 2334319* | METHOD FOR REDUCING SCARRING DURING WOUND HEALING USING ANTISENSE COMPOUNDS DIRECTED TO CTGF |
| Novartis AG, CH | ***C 07D 207/06***<br>***C 07D 207/08***<br>***C 07D 207/09***<br>***C 07D 401/04***<br>***C 07D 401/12***<br>***C 07D 403/04***<br>***C 07D 403/12***<br>***C 07D 405/12***<br>***C 07D 409/12***<br>***C 07D 413/04***<br>***C 07D 413/14***<br>***C 07D 417/04***<br>***C 07D 471/04***<br>***C 07D 487/04***<br>***A 61K 31/40***<br>***A 61K 31/4025***<br>***A 61K 31/437***<br>***A 61K 31/55***<br>***A 61P 35/00*** | EP 2253614 | Inhibitors of IAP |
| Novartis AG, CH | ***C 07C 233/79***<br>***C 07C 255/58***<br>***C 07C 311/39***<br>***C 07D 213/74***<br>***C 07D 213/75***<br>***C 07D 213/84***<br>***C 07D 277/42***<br>***A 61K 31/166***<br>***A 61K 31/427***<br>***A 61K 31/44***<br>***A 61P 1/00*** | EP 2323970* | CYCLOHEXYL AMIDE DERIVATIVES AND THEIR USE AS CRF-1 RECEPTOR ANTAGONISTS |
| Novartis AG, CH | ***C 07D 498/22*** | EP 2327706 | Polymorphous forms III and IV of N-benzoyl-staurosporine |
| Novartis AG, CH | ***A 61K 9/20***<br>***A 61K 31/165***<br>***A 61K 31/41*** | EP 2328562* | GALENICAL FORMULATION COMPRISING ALISKIREN AND PROCESS FOR ITS PREPARATION BY MELT EXTRUSION GRANULATION |

| (71) | (51) | Broj objave evropske prijave patenta | (54) |
|---|---|---|---|
| Novartis AG, CH | ***A 61K 9/20*** | EP 2328564* | FIXED DOSE COMBINATION IN FORM OF A BILAYERED OR MONOLAYERED TABLET OF ALISKIREN AND AMLODIPINE |
| Novartis AG, CH | ***A 61K 39/395***<br>***C 07K 16/18*** | EP 2328616* | COMPOSITIONS AND METHODS FOR ANTIBODIES TARGETING COMPLEMENT PROTEIN C5 |
| Novartis AG, CH | ***C 07D 498/04***<br>***A 61K 31/424***<br>***A 61P 43/00*** | EP 2328902* | PYRAZOLO [5,1-B]OXAZOLE DERIVATIVES AS CRF1 ANTAGONISTS |
| Novartis AG,CH; | ***C 07D 487/04***<br>***A 61K 31/519***<br>***A 61P 35/00*** | EP 2331547* | PYRROLOPYRIMIDINE COMPOUNDS AS CDK INHIBITORS |
| Novomatic AG, AT | ***G 07F 1/04*** | EP 2204781 | Guiding device |
| Nuvo Research Inc., CA | ***A 61K 9/06***<br>***A 61K 31/196***<br>***A 61K 47/10***<br>***A 61K 47/32***<br>***A 61K 47/36***<br>***A 61K 47/38***<br>***A 61K 9/00*** | EP 2086504* | DICLOFENAC GEL |
| NXP B.V., NL | H 01L 21/768 | EP 1577939 | Method of manufacturing a semiconductor device having damascene structures with air gaps |
| NXP B.V., NL | H 01L 21/768 | EP 1577940 | Method of manufacturing a semiconductor device having damascene structures with air gaps |
| Nycomed Austria GmbH, AT | ***A 61K 35/14***<br>***A 61P 3/10***<br>***A 61P 25/02*** | EP 2340026* | A DEPROTEINISED CALF BLOOD PREPARATION FOR USE IN PREVENTION OR TREATMENT OF DIABETIC PERIPHERAL POLYNEUROPATHY |
| Octapharma AG, CH | ***C 07K 14/755***<br>***C 07K 14/745***<br>***A 61K 38/00*** | EP 2331569* | RECOMBINANTLY PRODUCED HUMAN FACTOR VIII AND IX |
| Octapharma AG, CH | ***A 61K 38/37*** | EP 2337580* | NEW PROTECTING COMPOSITIONS FOR RECOMBINANTLY PRODUCED FACTOR VIII |
| Omnimount Systems, US | ***F 16M 13/02*** | EP 2216582 | System for mounting an object to a surface |
| Omya Development AG, CH | ***D 21B 1/16***<br>***D 21C 9/00***<br>***D 21D 1/00***<br>***D 21H 11/00***<br>***D 21H 11/18*** | EP 2236664 | Process for the production of nano-fibrillar cellulose suspensions |
| OncoMed Pharmaceuticals, US | ***A 61K 39/395*** | EP 2331136* | FRIZZLED-BINDING AGENTS AND USES THEREOF |
| Opiyo, KE | ***A 61K 31/185*** | EP 2326319* | CONJUGATED SURAMIN AMINO COMPOUNDS FOR MEDICAL CONDITIONS |
| Optosecurity Inc., CA | ***G 01N 23/04***<br>***G 01N 23/10*** | EP 2064535* | METHOD AND APPARATUS FOR ASSESSING CHARACTERISTICS OF LIQUIDS |
| Optosecurity Inc., CA | ***G 01N 23/04***<br>***G 01F 23/288***<br>***G 01N 23/10*** | EP 2331944* | METHOD AND SYSTEM FOR PERFORMING X-RAY INSPECTION OF A LIQUID PRODUCT AT A SECURITY CHECKPOINT |
| Optosecurity Inc., CA | ***B 65D 1/34***<br>***B 65D 21/02***<br>***G 01N 23/02***<br>***G 01N 23/04***<br>***G 01N 23/083***<br>***G 01N 23/10*** | EP 2334565* | TRAY FOR USE IN PERFORMING X-RAY INSPECTION OF ARTICLES AT A SECURITY CHECKPOINT AND METHOD OF USING SAME |
| Organoworld Inc., CA | ***F 03D 3/04***<br>***F 03D 11/00*** | EP 2324242* | TURBINE APPARATUS |
| Ormesa S.R.L., IT | ***A 61H 3/04*** | EP 2323610* | WALKER |

| (71) | (51) | Broj objave evropske prijave patenta | (54) |
|---|---|---|---|
| Otkrytoe Aktsionernoe Obschestvo, RU | ***F 04B 15/04***<br>***F 04B 1/00*** | EP 2071185 | MULTIPLUNGER HORIZONTAL SINGLE-ACTING PUMP |
| Otto Männer Innovation GmbH, DE | ***B 29C 45/28*** | EP 2156937 | Injection moulding tool with closable heating channel nozzle |
| Patrini, IT | ***B 65D 23/02***<br>***B 05B 11/00***<br>***B 29C 49/18***<br>***B 29C 49/24***<br>***B 29C 49/16***<br>***B 29C 49/06*** | EP 2246267 | Container associable with airless pumps and method for its production |
| Pentair Water Pool and Spa,US; | ***E 04H 4/12***<br>***F 04B 49/06***<br>***F 04B 49/20***<br>***F 04D 15/00***<br>***G 05D 7/06*** | EP 2122171* | FLOW CONTROL |
| Pettus,US; | ***C 07D 471/04***<br>***A 61K 31/444***<br>***A 61P 29/00*** | EP 2334673* | PYRIDO[3,2-d]PYRIDAZINE-2(1H)-ONE COMPOUNDS AS P38 MODULATORS AND METHODS OF USE THEREOF |
| Pfizer Inc., US | ***C 07D 493/10***<br>***C 07H 15/18***<br>***A 61K 31/357***<br>***A 61P 3/10*** | EP 2334687* | DIOXA-BICYCLO[3.2.1.]OCTANE-2,3,4-TRIOL DERIVATIVES |
| Pfizer Limited, GB | ***C 07D 211/46***<br>***A 61K 31/445***<br>***A 61P 13/00*** | EP 2328868* | NOVEL COMPOUNDS ACTIVE AS MUSCARINIC RECEPTOR ANTAGONISTS |
| Pharmacopeia, US | ***A 61K 31/4168***<br>***A 61K 31/4178***<br>***C 07D 233/88***<br>***C 07D 239/22***<br>***C 07D 271/06***<br>***C 07D 401/04***<br>***C 07D 401/10***<br>***C 07D 401/12***<br>***C 07D 401/14***<br>***C 07D 403/06***<br>***C 07D 403/10***<br>***C 07D 403/14***<br>***C 07D 405/06***<br>***C 07D 405/14***<br>***C 07D 407/14***<br>***C 07D 409/06***<br>***C 07D 413/12***<br>***C 07D 413/14*** | EP 2335701 | Heterocyclic aspartyl protease inhibitors |

| (71) | (51) | Broj objave evropske prijave patenta | (54) |
|---|---|---|---|
| Pharmacopeia, US | ***A 61K 31/4168***<br>***A 61K 31/4178***<br>***C 07D 233/88***<br>***C 07D 239/22***<br>***C 07D 271/06***<br>***C 07D 401/04***<br>***C 07D 401/10***<br>***C 07D 401/12***<br>***C 07D 401/14***<br>***C 07D 403/06***<br>***C 07D 403/10***<br>***C 07D 403/14***<br>***C 07D 405/06***<br>***C 07D 405/14***<br>***C 07D 407/14***<br>***C 07D 409/06***<br>***C 07D 413/12***<br>***C 07D 413/14***<br>***C 07D 417/12***<br>***A 61P 25/00***<br>***A 61P 31/00*** | EP 2343069 | Heterocyclic aspartyl protease inhibitors |
| Phenomix Corporation, US | ***A 61K 31/69***<br>***A 61K 31/505***<br>***A 61K 31/44***<br>***C 07F 5/02*** | EP 2061474* | SOLID CITRATE AND TARTRATE SALTS OF DPP-IV INHIBITORS |
| Philip Morris Products S.A., CH | ***B 65D 5/38***<br>***B 65D 5/72*** | EP 2331414* | DUAL COMPARTMENT SLIDE AND SHELL CONTAINER |
| Pierre Fabre Dermo-Cosmétique, FR | ***A 61K 31/01***<br>***A 61K 31/047***<br>***A 61P 17/02***<br>***A 61P 17/06***<br>***A 61K 8/30***<br>***A 61K 8/92*** | EP 2323639* | EMOLLIENT COMPOSITION |
| Pierre Fabre Medicament, FR | ***C 07D 491/04***<br>***A 61K 31/473***<br>***A 61K 31/4525*** | EP 2324031* | NITROGENATED DERIVATIVES OF PANCRATISTATIN |
| Pierre Fabre Medicament, FR | ***C 07D 493/04***<br>***A 61K 31/36***<br>***A 61P 35/00*** | EP 2326653* | NEW (POLY)AMINOALKYLAMINOALKYLAMIDE, ALKYL-UREA, OR ALKYL-SULFONAMIDE DERIVATIVES OF EPIPODOPHYLLOTOXIN, A PROCESS FOR PREPARING THEM, AND APPLICATION THEREOF IN THERAPY AS ANTICANCER AGENTS |
| Pierre Fabre Medicament, FR | ***C 07K 16/28*** | EP 2342233* | ANTI CXCR4 ANTIBODIES AND THEIR USE FOR THE TREATMENT OF CANCER |
| PJ Messtechnik GmbH, AT | ***B 61F 15/20***<br>***B 61L 25/02***<br>***B 61D 43/00*** | EP 2323886* | WHEELSET BEARING HOUSING HAVING A POSITION DETECTION DEVICE FOR A RAIL VEHICLE AND RAIL VEHICLE EQUIPPED THEREWITH |
| Polich, US | ***A 61K 36/534***<br>***A 61K 36/38***<br>***A 61P 29/00***<br>***A 61P 17/00*** | EP 2334313* | HOMEOPATHIC THERAPEUTIC METHOD |

| (71) | (51) | Broj objave evropske prijave patenta | (54) |
|---|---|---|---|
| Polichem SA, LU | ***A 61K 9/00***<br>***A 61K 9/06***<br>***A 61K 9/107***<br>***A 61K 31/345***<br>***A 61K 31/4164***<br>***A 61K 31/4174***<br>***A 61K 31/4412***<br>***A 61K 31/4418***<br>***A 61K 31/4745***<br>***A 61K 31/522***<br>***A 61K 31/569***<br>***A 61P 15/02***<br>***A 61P 15/12***<br>***A 61P 17/00*** | EP 2331065* | MODIFIED RELEASE EMULSIONS FOR APPLICATION TO SKIN OR VAGINAL MUCOSA |
| Potters Industries, US | ***C 09D 5/33***<br>***C 09D 7/12***<br>***B 05D 5/06***<br>***E 01F 9/04*** | EP 2342292* | RETROREFLECTIVE COATING AND METHOD FOR APPLYING A RETROREFLECTIVE COATING ON A STRUCTURE |
| Poulten Selfe & Lee Ltd., GB | ***G 01N 11/04*** | EP 2249141 | A viscometer and a method for operating the same |
| PregLem S.A., CH | ***A 61K 31/18***<br>***A 61P 15/06*** | EP 2323646* | USE OF STEROID SULFATASE INHIBITORS FOR THE TREATMENT OF PRETERM LABOR |
| Prime European Therapeuticals S.p.A., IT | ***C 07D 213/46*** | EP 2272831 | Process for the preparation of arylpyridinyl compounds |
| Proteotech Inc., US | ***A 01N 47/28*** | EP 2328417* | COMPOUNDS, COMPOSITIONS AND METHODS FOR THE TREATMENT OF beta-AMYLOID DISEASES AND SYNUCLEINOPATHIES |
| Providence And Biomedical Research Services, US | ***A 61F 13/02*** | EP 2340002* | FOAM MEDICAL DEVICES AND METHODS |
| Providence Health System - Oregon,US; | ***A 61F 13/02*** | EP 2340002* | FOAM MEDICAL DEVICES AND METHODS |
| Purdue Pharma LP, US | ***C 07D 489/12***<br>***A 61K 31/485***<br>***A 61P 25/04*** | EP 2326651* | BUPRENORPHINE ANALOGS |
| Purdue Pharma LP, US | ***A 61K 31/485***<br>***A 61K 9/22***<br>***A 61K 9/32*** | EP 2343071 | Pharmaceutical dosage forms |
| Purdue Pharma LP,US; | ***C 07D 403/04***<br>***A 61K 31/498***<br>***A 61P 25/04*** | EP 2324013* | SUBSTITUTED-QUINOXALINE-TYPE BRIDGED-PIPERIDINE COMPOUNDS AND THE USES THEREOF |
| Purdue Pharma LP,US; | ***C 07D 401/04***<br>***C 07D 413/14***<br>***C 07D 409/14***<br>***C 07D 401/14***<br>***C 07D 413/04***<br>***C 07D 451/02***<br>***A 61K 31/44***<br>***A 61P 25/28***<br>***A 61P 25/04*** | EP 2331522* | TETRAHYDROPYRIDINYL AND DIHYDROPYRROLYL COMPOUNDS AND THE USE THEREOF |
| QLT Plug Delivery, US | ***A 61F 9/00***<br>***A 61F 9/007*** | EP 2328527* | LACRIMAL IMPLANT BODY INCLUDING COMFORTING AGENT |
| Quintessence Biosciences, US | ***C 07K 14/435***<br>***C 07H 21/00***<br>***A 61K 38/00*** | EP 2334695* | THERAPEUTIC RIBONUCLEASES |
| RESEARCH IN MOTION LIMITED, CA | ***G 06F 3/01*** | EP 2328063 | Portable electronic device and method of controlling same to provide tactile feedback |

| (71) | (51) | Broj objave evropske prijave patenta | (54) |
|---|---|---|---|
| RESEARCH IN MOTION LIMITED, CA | ***G 06F 3/041***<br>***G 06F 3/01***<br>***G 06F 3/048*** | EP 2328065 | Electronic device and method of controlling same |
| RESEARCH IN MOTION LIMITED, CA | ***G 06F 3/048*** | EP 2328068 | Portable electronic device and method of controlling same |
| RESEARCH IN MOTION LIMITED, CA | ***H 04W 4/16***<br>***H 04W 52/02*** | EP 2330837 | System, method and device for maintaining a communication session suspended for servicing of power supply |
| RESEARCH IN MOTION LIMITED, CA | ***G 01R 31/28*** | EP 2341353 | Self-aligning test fixture for printed circuit board |
| RESEARCH IN MOTION LIMITED, CA | ***H 05K 3/32***<br>***H 05K 3/40*** | EP 2343957 | Electrical interconnect |
| Richter Gedeon Nyrt., HU | ***A 01N 43/40***<br>***A 61K 31/445*** | EP 2330899* | METHODS FOR TREATING NEUROPATHIC PAIN |
| Richter Gedeon Nyrt., HU | ***A 61K 31/445***<br>***C 07D 211/06*** | EP 2331097* | METHODS FOR TREATING CNS DISORDERS |
| Robert Bosch GmbH, DE | ***G 01C 21/34*** | EP 2146184 | Method for inputting and presenting information in a navigation system |
| Robert Bosch GmbH, DE | ***B 65B 1/24***<br>***B 65B 61/24*** | EP 2246261 | Method and device for levelling packages filled with bulk material or paste goods |
| Rocco, IT | ***A 61M 25/00***<br>***A 61M 27/00*** | EP 2341972* | CATHETER STRUCTURE |
| Roche Glycart AG, CH | ***C 07K 16/28***<br>***C 07K 16/46*** | EP 2342231* | BISPECIFIC ANTI-EGFR/ANTI-IGF-1R ANTIBODIES |
| Roes, BE | ***A 47J 19/06***<br>***B 26D 3/26***<br>***B 30B 1/12*** | EP 2248450 | Device for handling food |
| Royal Tag SA, CH | ***A 01K 11/00*** | EP 2337444* | HIGH SPEED SYSTEM FOR ELECTRONIC IDENTIFICATION OF LIVESTOCK |
| RWE Power Aktiengesellschaft, DE | ***C 10L 5/08*** | EP 2275521 | Moulded body comprising brown coal |
| Ryckewaert,BE; | ***B 65B 31/08***<br>***B 65B 55/02***<br>***B 65D 81/20*** | EP 2334561* | SYSTEM, METHOD AND DEVICE FOR STERILIZATION AND PACKAGING FOR USE THEREFOR |
| S P A SOCIETA' PRODOTTI ANTIBIOTICI S.p.a.,IT; | ***A 61K 31/23***<br>***A 61P 9/06*** | EP 2323647* | LONG-TERM TREATMENT OF SYMPTOMATIC HEART FAILURE |
| S.I.F.I. Societa' Industria Farmaceutica Italiana, IT | ***A 61K 31/44***<br>***A 61P 27/00***<br>***A 61P 27/06*** | EP 2323657* | OPHTHALMIC PHARMACEUTICAL COMPOSITIONS COMPRISING SORAFENIB FOR THE TREATMENT OF NEOANGIOGENIC PATHOLOGIES OF THE EYE |
| SAINT-GOBAIN SEVA, FR | ***E 05D 11/10***<br>***E 05F 1/00*** | EP 2253788 | Device for blocking the rotation of a door and door comprising such a device |
| SAINT-GOBAIN SEVA, FR | ***E 05D 11/10***<br>***E 05F 1/00***<br>***E 05F 3/22*** | EP 2256275 | Rotation blocking device of a door and door equipped with such device |
| Samba Financial Group, SA | ***G 01S 1/00***<br>***G 06K 19/077***<br>***G 01C 21/20*** | EP 2329284* | BEARING INFORMATION ON A CARD |
| Sanofi-Aventis Deutschland GmbH, DE | ***A 61K 45/06*** | EP 2324853 | Lixisenatide as add-on to metformin in the treatment of diabetes type 2 |
| Sanofi-Aventis Deutschland GmbH, DE | ***A 61K 45/06*** | EP 2329848 | Lixisenatide as add-on therapy to insulin glargine and metformin for treating type 2 diabetes |
| Sanofi-Aventis, FR | ***A 61K 31/519***<br>***A 61K 31/704***<br>***A 61K 31/7068***<br>***A 61K 45/06***<br>***A 61P 35/02*** | EP 2107906* | NOVEL THERAPEUTIC USE FOR TREATING LEUKAEMIA |
| Sanofi-Aventis, FR | ***A 61K 31/15***<br>***A 61P 25/00*** | EP 2186511 | Method of treating sleep disorders using eplivanserin |

| (71) | (51) | Broj objave evropske prijave patenta | (54) |
|---|---|---|---|
| Sanofi-Aventis, FR | ***C 07C 271/10***<br>***C 07D 215/04***<br>***C 07D 237/08***<br>***C 07D 233/54***<br>***C 07D 235/14***<br>***C 07D 263/32***<br>***C 07D 471/04***<br>***A 61P 29/00***<br>***A 61P 25/00*** | EP 2251324 | HETEROARYL-ALKYLCARBAMATE COMPOUNDS AND THEIR USE AS INHIBITORS OF THE FAAH ENZYME |
| Sanofi-Aventis, FR | ***C 07D 409/06***<br>***C 07D 409/14***<br>***A 61K 31/445***<br>***A 61P 29/00***<br>***A 61P 25/00***<br>***A 61P 3/00***<br>***C 07D 417/06***<br>***C 07D 417/14***<br>***C 07D 333/38***<br>***C 07D 211/64***<br>***C 07D 205/04***<br>***C 07D 211/38***<br>***C 07D 211/62***<br>***A 61K 31/381***<br>***A 61K 31/397***<br>***A 61K 31/4535***<br>***A 61K 31/4545***<br>***A 61P 1/00***<br>***A 61P 19/00*** | EP 2324015* | THIOPHENE-2-CARBOXAMIDE DERIVATIVES, PREPARATION THEREOF AND THERAPEUTIC USE THEREOF |
| Sanofi-Aventis, FR | ***A 61K 31/343***<br>***A 61P 9/10***<br>***A 61K 9/28*** | EP 2326324* | USE OF DRONEDARONE FOR THE PREPARATION OF A MEDICAMENT FOR THE PREVENTION OF STROKE OR TRANSIENT ISCHEMIC ATTACK |
| Sanofi-Aventis, FR | ***A 61K 31/4523***<br>***A 61P 13/00*** | EP 2328583* | NEW THERAPEUTIC USE OF DROTAVERINE |
| Sanofi-Aventis, FR | ***A 61K 45/06***<br>***A 61K 31/517***<br>***A 61K 31/472***<br>***A 61P 13/08***<br>***A 61P 13/10*** | EP 2331137* | NEW COMBINATION OF ACTIVE INGREDIENTS CONTAINING AN ALPHA-1ANTAGONIST AND A PDE 4 INHIBITOR |
| Sanofi-Aventis, FR | ***C 07D 487/04***<br>***A 61K 31/5025***<br>***A 61P 25/00***<br>***A 61P 35/00*** | EP 2331546* | 2-ALKYL-6-CYCLOAMINO-3-(PYRIDIN-4-YL)IMIDAZO[1,2-IB]-PYRIDAZINE DERIVATIVES, PREPARATION THEREOF, AND THERAPEUTIC APPLICATION THEREOF |
| Sanofi-Aventis, FR | ***C 07D 493/18***<br>***C 07H 19/01*** | EP 2331549* | METHOD FOR PREPARING 1,6:2,3-DIANHYDRO-BETA-D-MANNOPYRANOSE |
| Sanofi-Aventis, FR | ***C 07D 493/18***<br>***C 07H 19/01*** | EP 2331550* | SHORT SYNTHETIC PATHWAY FOR 1,6:2,3-DIANHYDRO-BETA-D-MANNOPYRANOSE |
| Sapphire Energy, US | ***C 12N 15/63***<br>***C 12N 15/82***<br>***A 01H 1/00***<br>***C 12Q 1/68*** | EP 2342344* | SYSTEM FOR CAPTURING&MODIFYING LARGE PIECES OF GENOMIC DNA AND CONSTRUCTING ORGANISMS WITH SYNTHETIC CHLOROPLASTS |
| Sara Lee/DE N.V., NL | ***A 47J 31/36***<br>***A 47J 31/06***<br>***B 65D 85/804*** | EP 2326223* | SYSTEM, METHOD AND CAPSULE FOR PREPARING A BEVERAGE |
| Schering Corporation, US | ***C 07C 211/00***<br>***C 07D 413/04***<br>***C 07D 413/14*** | EP 2069284* | PROCESS AND INTERMEDIATES FOR THE SYNTHESIS OF 2-(QUINOLIN-5-YL)-4,5 DISUBSTITUTED-AZOLE DERIVATIVES |
| Schering Corporation, US | ***A 61K 9/20***<br>***A 61K 31/155*** | EP 2099430* | PH SENSITIVE MATRIX FORMULATION |

| (71) | (51) | Broj objave evropske prijave patenta | (54) |
|---|---|---|---|
| Schering Corporation, US | ***C 07D 209/52*** | EP 2121604* | BISULFITE PURIFICATION OF AN ALPHA-KETO AMIDE |
| Schering Corporation, US | ***A 61K 31/501***<br>***A 61P 31/10***<br>***A 01N 43/60*** | EP 2136808* | PIPERAZINE-SUBSTITUTED PYRIDAZINONE DERIVATIVES USEFUL AS GLUCAN SYNTHASE INHIBITORS |
| Schering Corporation, US | ***C 12N 15/12***<br>***C 07K 14/715***<br>***C 12N 15/24***<br>***C 07K 14/54***<br>***A 61K 38/20***<br>***A 61K 39/00***<br>***A 61K 31/7088***<br>***C 12Q 1/68***<br>***G 01N 33/53***<br>***A 61K 48/00***<br>***A 61P 37/00*** | EP 2256203 | IL-23 and its receptor; related reagents and methods |
| Schering Corporation,US; | ***A 61K 31/4168***<br>***A 61K 31/4178***<br>***C 07D 233/88***<br>***C 07D 239/22***<br>***C 07D 271/06***<br>***C 07D 401/04***<br>***C 07D 401/10***<br>***C 07D 401/12***<br>***C 07D 401/14***<br>***C 07D 403/06***<br>***C 07D 403/10***<br>***C 07D 403/14***<br>***C 07D 405/06***<br>***C 07D 405/14***<br>***C 07D 407/14***<br>***C 07D 409/06***<br>***C 07D 413/12***<br>***C 07D 413/14***<br>***C 07D 417/12***<br>***A 61P 25/00***<br>***A 61P 31/00*** | EP 2335701 | Heterocyclic aspartyl protease inhibitors |
| Schering Corporation,US; | ***A 61K 31/4168***<br>***A 61K 31/4178***<br>***C 07D 233/88***<br>***C 07D 239/22***<br>***C 07D 271/06***<br>***C 07D 401/04***<br>***C 07D 401/10***<br>***C 07D 401/12***<br>***C 07D 401/14***<br>***C 07D 403/06***<br>***C 07D 403/10***<br>***C 07D 403/14***<br>***C 07D 405/06***<br>***C 07D 405/14***<br>***C 07D 407/14***<br>***C 07D 409/06***<br>***C 07D 413/12***<br>***C 07D 413/14*** | EP 2343069 | Heterocyclic aspartyl protease inhibitors |
| Schulte Elektrotechnik GmbH & Co. Kg, DE | ***H 01R 13/631***<br>***H 01R 13/633*** | EP 2332218* | MAINS PLUG |
| Sebert Schwingungstechnik GmbH, DE | ***F 16F 7/14*** | EP 2339202 | Dampening and spring arrangement and method for its production |

| (71) | (51) | Broj objave evropske prijave patenta | (54) |
|---|---|---|---|
| SEE-O-TWO Patentgesellschaft mbH, AT | ***C 12M 1/00*** | EP 2325293 | Assembly and method for three-dimensional distribution of electromagnetic radiation in a fluid medium |
| SGX Pharmaceuticals, US | ***C 07D 487/04***<br>***A 61K 31/5025***<br>***A 61K 31/53***<br>***A 61P 35/00***<br>***C 07D 519/00*** | EP 2081937* | TRIAZOLOPYRIDAZINE PROTEIN KINASE MODULATORS |
| Shionogi & Co., JP | ***C 07D 403/04***<br>***A 61K 31/498***<br>***A 61P 25/04*** | EP 2324013* | SUBSTITUTED-QUINOXALINE-TYPE BRIDGED-PIPERIDINE COMPOUNDS AND THE USES THEREOF |
| Shionogi Co., JP | ***C 07D 401/04***<br>***C 07D 413/14***<br>***C 07D 409/14***<br>***C 07D 401/14***<br>***C 07D 413/04***<br>***C 07D 451/02***<br>***A 61K 31/44***<br>***A 61P 25/28***<br>***A 61P 25/04*** | EP 2331522* | TETRAHYDROPYRIDINYL AND DIHYDROPYRROLYL COMPOUNDS AND THE USE THEREOF |
| Shionogi&Co., JP | ***C 07D 505/24***<br>***A 61K 31/5365***<br>***A 61K 31/546***<br>***A 61K 31/55***<br>***A 61P 31/04***<br>***C 07D 501/46***<br>***C 07D 519/06*** | EP 2341053 | CEPHALOSPORIN HAVING CATECHOL GROUP |
| SimQuest LLC, US | ***G 09B 23/28***<br>***G 08B 6/00***<br>***G 06G 7/60***<br>***G 06G 7/48*** | EP 2329480* | SURGICAL BURR HOLE DRILLING SIMULATOR |
| Sirtris Pharmaceuticals, US | ***C 07D 413/12***<br>***C 07D 417/12***<br>***C 07D 263/57***<br>***A 61P 3/00***<br>***A 61K 31/42***<br>***A 61P 3/10***<br>***A 61K 31/423***<br>***C 07D 277/66*** | EP 2331534* | BENZOXAZOLES, BENZTHIAZOLES AND RELATED ANALOGS AS SIRTUIN MODULATORS |
| Sirtris Pharmaceuticals, US | ***C 07D 311/22***<br>***A 61K 31/353***<br>***A 61P 3/10*** | EP 2342188* | CHROMENONE ANALOGS AS SIRTUIN MODULATORS |
| Sixterpharma S.r.l., IT | ***A 61K 31/23***<br>***A 61P 9/06*** | EP 2323647* | LONG-TERM TREATMENT OF SYMPTOMATIC HEART FAILURE |
| Smithkline Beecham Corporation, US | ***C 07D 473/16***<br>***C 07D 473/18***<br>***A 61K 31/522***<br>***A 61P 37/00***<br>***A 61P 35/00*** | EP 2324025* | PURINE DERIVATIVES FOR USE IN THE TREATMENT OF ALLERGIC, INFLAMMATORY AND INFECTIOUS DISEASES |
| Smithkline Beecham Corporation, US | ***C 07D 473/18***<br>***C 07D 473/16***<br>***A 61K 31/522***<br>***A 61P 37/00***<br>***A 61P 35/00*** | EP 2324026* | PURINE DERIVATIVES FOR USE IN THE TREATMENT OF ALLERGIC, INFLAMMATORY AND INFECTIOUS DISEASES |

| (71) | (51) | Broj objave evropske prijave patenta | (54) |
|---|---|---|---|
| Sn Biotech Technologies Sp. Z O.o. Sp. K.,PL; | ***A 01N 57/20***<br>***A 01N 25/30***<br>***A 01N 59/02***<br>***A 01P 13/00*** | EP 2341778* | A LIQUID, HOMOGENOUS HERBICIDE COMPOSITION, A METHOD OF WEED CONTROL, A METHOD OF PRODUCTION OF LIQUID, HOMOGENOUS HERBICIDE COMPOSITION AND USE OF A LIQUID, HOMOGENOUS HERBICIDE COMPOSITION FOR WEED CONTROL |
| Société de Technologie MICHELIN,FR; | ***H 02K 1/16***<br>***H 02K 1/18***<br>***H 02K 1/20*** | EP 2332232* | STATOR FOR ROTARY ELECTRIC MACHINE AND METHOD FOR MAKING SAME |
| Sofar SPA, IT | ***G 01N 33/574*** | EP 2239580 | Determination of 5-ASA efficacy in CRC prevention and/or treatment by gene expression analysis |
| Softkinetic, BE | ***G 06K 9/00*** | EP 2339507 | Head detection and localisation method |
| Solyndra LLC, US | ***H 01L 31/052***<br>***H 01L 31/0352*** | EP 2118937* | A PHOTOVOLTAIC APPARATUS HAVING AN ELONGATED PHOTOVOLTAIC DEVICE USING AN INVOLUTE-BASED CONCENTRATOR |
| Sommer Antriebs- und Funktechnik GmbH, DE | ***E 05F 15/16***<br>***E 05F 15/14***<br>***E 05F 15/00*** | EP 2324179* | DRIVE SYSTEM FOR A DOOR |
| Sooft Italia Spa, IT | ***A 61K 31/14***<br>***A 61K 31/19***<br>***A 61K 31/195***<br>***A 61K 31/352***<br>***A 61K 31/473***<br>***A 61K 31/49***<br>***A 61K 31/5415***<br>***A 61K 31/56***<br>***A 61K 31/60***<br>***A 61P 27/02*** | EP 2323642* | USE OF ENHANCERS, POSSIBLY ASSOCIATED TO RIBOFLAVIN, AS WELL AS CORRESPONDING OPHTHALMIC COMPOSITIONS FOR CORNEAL CROSS-LINKING IN THE TREATMENT OF THE KERATOCONUS OR OF OTHER CORNEAL ECTASIC DISORDERS |
| SOUTHERN METHODIST UNIVERSITY, US | ***C 07D 241/40***<br>***C 07D 319/18***<br>***C 07D 335/04***<br>***C 07D 265/36***<br>***C 07D 279/16***<br>***A 61K 31/535***<br>***A 61P 21/00*** | EP 2328877* | 1,4-BENZOXAZINE COMPOUNDS AND DERIVATIVES THEREOF AS THERAPEUTIC DRUGS FOR THE TREATMENT OF NEURODEGENERATIVE CONDITIONS |
| STIEFEL LABORATORIES, US | ***C 07D 233/00***<br>***C 07D 403/00*** | EP 2114895* | TALARAZOLE METABOLITES |
| Strömme,SE; | ***C 08F 8/12***<br>***C 08F 218/08***<br>***A 61K 9/00*** | EP 2331587* | VINYL ALCOHOL CO-POLYMER CRYOGELS, VINYL ALCOHOL CO-POLYMERS, AND METHODS AND PRODUCTS THEREOF |
| Stuetz, AT | ***A 61B 3/028*** | EP 2243419 | Integral and differential visual objects for examination and optimization of vision |
| Sulzer Chemtech AG, CH | ***B 01D 3/00*** | EP 2243529 | Fluid entry device |
| Sun City Xiamen Rainwear Co., CN | ***A 45B 25/16***<br>***A 45B 25/14*** | EP 2327324 | AUTOMATIC OPEN-CLOSE UMBRELLA |
| Sunoco Chemicals, US | ***C 08L 23/00***<br>***C 08L 23/04*** | EP 2334732* | RANDOM COPOLYMER WITH ENHANCED ETHYLENE CONTENT |
| Syngenta Limited, GB | ***A 01N 25/28***<br>***A 01N 25/04***<br>***A 01N 51/00***<br>***A 01P 7/04*** | EP 1965638* | Sustained-release microcapsules |
| Syngenta Limited, GB | ***A 01N 25/28***<br>***B 01J 13/04***<br>***B 01J 13/14***<br>***A 01P 7/04*** | EP 2288257* | MICROENCAPSULATION PROCESS FOR PRODUCING MICROCAPSULES COMPRISING A SURFACE-MODIFIED PARTICULATE INORGANIC MATERIAL IN A CROSS-LINKED MICROCAPSULE WALL |

| (71) | (51) | Broj objave evropske prijave patenta | (54) |
|---|---|---|---|
| Syngenta Limited, GB | ***C 07D 261/02***<br>***C 07D 413/12***<br>***A 01N 43/80***<br>***A 61P 29/00*** | EP 2331515* | INSCETICIDAL COMPOUNDS |
| Syngenta Limited, GB | ***C 07D 413/12***<br>***A 01N 43/80*** | EP 2331535* | INSECTICIDAL COMPOUNDS |
| Syngenta Participations AG, CH | ***C 12N 15/82*** | EP 2329028* | ENGINEERING OF BOLTING RESISTANCE IN SUGAR BEET BY MEANS OF THE TRANSGENIC EXPRESSION OF THE BEET HOMOLOGUE OF FLOWERING TIME CONTROL GENE FT |
| Syngenta Participations AG,CH; | ***C 07D 261/02***<br>***C 07D 413/12***<br>***A 01N 43/80***<br>***A 61P 29/00*** | EP 2331515* | INSCETICIDAL COMPOUNDS |
| Syngenta Participations AG,CH; | ***C 07D 413/12***<br>***A 01N 43/80*** | EP 2331535* | INSECTICIDAL COMPOUNDS |
| Synta Pharmaceuticals Corp., US | ***A 61P 35/00***<br>***A 61P 29/00***<br>***A 61K 31/4196***<br>***C 07D 249/12***<br>***C 07D 249/14***<br>***C 07D 249/08***<br>***C 07D 401/04***<br>***C 07D 401/10***<br>***C 07D 401/14***<br>***C 07D 403/04***<br>***C 07D 403/08***<br>***C 07D 403/10***<br>***C 07D 403/12***<br>***C 07D 403/14***<br>***C 07D 405/04*** | EP 2323737* | TRIAZOLE COMPOUNDS THAT MODULATE HSP90 ACTIVITY |
| Synta Pharmaceuticals Corp., US | ***C 07D 413/10***<br>***C 07D 405/14***<br>***C 07D 249/10***<br>***A 61K 31/343***<br>***A 61K 31/4196*** | EP 2328893* | TRIAZOLE COMPOUNDS THAT MODULATE HSP90 ACTIVITY |
| TAISHO PHARMACEUTICAL CO., JP | ***B 30B 11/02***<br>***A 61J 3/10*** | EP 2335915 | TABLET COMPRESSION DIE |
| Takeda Pharmaceutical Company Limited, JP | ***C 07K 14/47*** | EP 2113513 | Metastin derivatives and use thereof |
| Takeda Pharmaceutical Company Limited, JP | ***C 07D 223/16***<br>***C 07D 401/06***<br>***C 07D 401/12***<br>***C 07D 401/14***<br>***C 07D 403/12***<br>***C 07D 405/12***<br>***C 07D 405/14***<br>***C 07D 409/12***<br>***C 07D 409/14***<br>***C 07D 413/12***<br>***C 07D 417/12***<br>***A 61K 31/55***<br>***A 61P 25/18*** | EP 2326625* | BENZAZEPINE DERIVATIVES AND THEIR USE AS HSTAMINE H3 ANTAGONISTS |

| (71) | (51) | Broj objave evropske prijave patenta | (54) |
|---|---|---|---|
| Takeda Pharmaceutical Company Limited, JP | ***A 61K 31/4184***<br>***A 61K 31/4422***<br>***A 61K 47/12***<br>***A 61K 47/22***<br>***A 61P 1/00***<br>***A 61P 1/02***<br>***A 61P 1/04***<br>***A 61P 1/14***<br>***A 61P 3/00***<br>***A 61P 3/04***<br>***A 61P 3/06***<br>***A 61P 3/12***<br>***A 61P 5/50***<br>***A 61P 7/00***<br>***A 61P 7/02***<br>***A 61P 7/10***<br>***A 61P 9/00***<br>***A 61P 9/06***<br>***A 61P 9/08***<br>***A 61P 9/10*** | EP 2332535 | SOLID PHARMACEUTICAL COMPOSITION |
| Tasker, US | ***C 07D 471/04***<br>***A 61K 31/444***<br>***A 61P 29/00*** | EP 2334673* | PYRIDO[3,2-d]PYRIDAZINE-2(1H)-ONE COMPOUNDS AS P38 MODULATORS AND METHODS OF USE THEREOF |
| Tasmanian Alkaloids Pty. Ltd., AU | ***C 07D 489/08***<br>***C 07D 489/02***<br>***B 01J 23/42*** | EP 2328900* | PROCESS FOR MAKING MORPHINAN-6 alpha-OLS |
| TDW DELAWARE, US | ***B 65D 43/14*** | EP 2326565* | TWO-PIECE CLOSURE DEVICE |
| Terra Consulting GmbH, DE | ***E 04B 7/02***<br>***E 04B 7/14***<br>***E 04D 11/00*** | EP 1959068 | Device for renovating flat roofs |
| Tetraphase Pharmaceuticals, US | ***C 07C 237/26***<br>***C 07C 239/20***<br>***C 07C 275/16***<br>***C 07C 275/42***<br>***C 07C 311/08***<br>***C 07C 311/21***<br>***C 07D 205/04***<br>***C 07D 207/08***<br>***C 07D 207/10***<br>***C 07D 207/12***<br>***C 07D 207/14***<br>***C 07D 207/16***<br>***C 07D 207/34***<br>***C 07D 209/44***<br>***C 07D 209/52*** | EP 2323972* | C7-FLUORO SUBSTITUTED TETRACYCLINE COMPOUNDS |
| Teva Pharmaceutical Industries Ltd., IL | ***C 07D 215/58***<br>***C 07D 215/227***<br>***A 61K 31/47***<br>***A 61K 31/198***<br>***A 61P 37/08*** | EP 2337779* | 2-OXO-1,2-DIHYDRO-QUINOLINE MODULATORS OF IMMUNE FUNCTION |
| Textile Management Associates, US | ***E 01C 13/08*** | EP 2337898* | SYSTEM AND METHOD FOR STORAGE AND TEMPORARY INSTALLATION OF SECONDARY FLOORING SURFACE |
| The Board of Trustees of, US | ***C 07K 16/10***<br>***A 61K 39/395*** | EP 2331573* | HEPATITIS C ANTIBODIES AND USES THEREOF |
| The Government of the United States as Represented, US | ***A 01N 43/46*** | EP 2334182* | METHOD OF TREATING ORGANOPHOSPHOROUS POISONING |

| (71) | (51) | Broj objave evropske prijave patenta | (54) |
|---|---|---|---|
| The Governors of the University of Alberta, CA | ***G 01N 33/48***<br>***G 01N 24/08***<br>***G 01N 33/483***<br>***G 01R 33/465*** | EP 2331955* | A METHOD OF DIAGNOSING A RESPIRATORY DISEASE |
| The Regents Of The University Of California, US | ***C 12N 15/11*** | EP 2331690* | COMPOSITIONS AND METHODS FOR INHIBITING EXPRESSION OF MUTANT EGFR GENE |
| The Regents Of The University Of California, US | ***G 06F 19/00*** | EP 2332082* | METHOD OF CHARACTERIZING SEQUENCES FROM GENETIC MATERIAL SAMPLES |
| The Trustees of Columbia University in the City of, US | ***A 61K 39/00*** | EP 2326345* | HUMAN NOTCH3 BASED FUSION PROTEINS AS DECOY INHIBITORS OF NOTCH3 SIGNALING |
| The Trustees Of The University Of Pennsylvania, US | ***A 61K 38/20*** | EP 2059253* | MODULATION OF REGULATORY T CELLS BY HUMAN IL-18 |
| The Trustees of the University of Pennsylvania, US | ***A 61K 48/00*** | EP 2086591* | EFFICIENT NUCLEAR DELIVERY OF ANTISENSE OLIGONUCLEOTIDES |
| The Trustees Of The University Of Pennsylvania, US | ***C 12N 15/09*** | EP 2342334* | TUMOR VASCULAR MARKER-TARGETED VACCINES |
| THE UNIVERSITY OF BRITISH COLUMBIA, CA | ***C 07K 14/47***<br>***A 61K 39/00***<br>***A 61K 39/395***<br>***A 61P 37/04***<br>***C 07K 14/00***<br>***C 07K 16/00***<br>***C 07K 16/18***<br>***C 07K 7/06***<br>***G 01N 33/53***<br>***G 06F 19/00***<br>***C 04B 30/02***<br>***G 01N 33/68*** | EP 2342220* | METHODS AND SYSTEMS FOR PREDICTING MISFOLDED PROTEIN EPITOPES |
| The University of North Carolina At Chapel Hill, US | ***A 61K 31/47***<br>***A 61K 31/443***<br>***A 61K 31/403***<br>***A 61K 31/506***<br>***A 61K 31/519***<br>***A 61K 35/12***<br>***A 61P 35/00*** | EP 2341906* | HEMATOPOIETIC PROTECTION AGAINST IONIZING RADIATION USING SELECTIVE CYCLIN-DEPENDENT KINASE 4/6 INHIBITORS |
| The University of North Carolina At Chapel Hill, US | ***A 61K 31/519***<br>***A 61K 31/407***<br>***A 61P 35/00*** | EP 2341911* | HEMATOPOIETIC PROTECTION AGAINST CHEMOTHERAPEUTIC COMPOUNDS USING SELECTIVE CYCLIN-DEPENDENT KINASE 4/6 INHIBITORS |
| THE WALTER AND ELIZA HALL INSTITUTE OF MEDICAL, AU | ***C 07D 239/94***<br>***A 61K 31/517***<br>***A 61P 43/00*** | EP 2094672* | ARYLSULFONAMIDE COMPOUNDS |
| Theraclion SAS, FR | ***A 61N 7/02***<br>***A 61B 18/00***<br>***A 61B 17/225***<br>***A 61B 17/00*** | EP 2327450 | A cover, a treatment device and a method of use of such a device |
| Theracos, US | ***C 07D 309/10***<br>***C 07D 309/08***<br>***A 61K 31/353***<br>***A 61P 3/10***<br>***A 61P 3/00*** | EP 2324002* | PROCESSES FOR THE PREPARATION OF SGLT2 INHIBITORS |
| Translational Genomics Research Institute,US; | ***G 06F 19/00*** | EP 2332082* | METHOD OF CHARACTERIZING SEQUENCES FROM GENETIC MATERIAL SAMPLES |

| (71) | (51) | Broj objave evropske prijave patenta | (54) |
|---|---|---|---|
| Transmisie engineering a.s., SK | ***F 16H 37/06***<br>***F 16H 48/10*** | EP 2336601 | Transmission with one input and two output opposed shafts |
| Traslational Cancer Drugs Pharma, ES | ***A 61K 45/06***<br>***A 61P 35/00***<br>***C 12Q 1/34*** | EP 2340042* | METHODS AND COMPOSITIONS FOR THE TREATMENT OF CANCER |
| Travanti Pharma Inc, US | ***A 61N 1/30*** | EP 2331199* | IONTOPHORETIC DRUG DELIVERY PACKAGING |
| Travanti Pharma Inc, US | ***A 61N 1/30*** | EP 2331200* | SACRIFICIAL ELECTRODE DESIGN AND DELIVERY SPECIES SUITABLE FOR PROLONGED IONTOPHORESIS APPLICATION PERIODS |
| UCB Pharma S.A., BE | ***C 07K 14/715*** | EP 2294083* | EPITOPES OF IL-17A AND IL-17F AND ANTIBODIES SPECIFIC THERETO |
| UCB Pharma S.A., BE | ***A 61M 5/31***<br>***A 61M 5/32***<br>***A 61M 5/00*** | EP 2326371* | SYSTEMS FOR ADMINISTERING MEDICATION FOR RHEUMATOID ARTHRITIS PATIENTS |
| UCB Pharma, BE | ***C 07K 16/46***<br>***C 07K 16/18***<br>***C 07K 16/28***<br>***C 07K 16/24*** | EP 2334705* | BIOLOGICAL PRODUCTS |
| Universität Duisburg-Essen,DE; | ***C 12M 1/00*** | EP 2325293 | Assembly and method for three-dimensional distribution of electromagnetic radiation in a fluid medium |
| Universite De Geneve, CH | ***G 01N 33/68*** | EP 2331965* | ANALYSIS OF GLYCATED PROTEINS |
| University of Maine System Board of Trustees, US | ***A 01H 5/00***<br>***C 12N 15/82***<br>***C 12N 5/10*** | EP 2328405* | PLANT GLUTAMINE PHENYLPYRUVATE TRANSAMINASE GENE AND TRANSGENIC PLANTS CARRYING SAME |
| University of Maine System Board of Trustees, US | ***A 01H 5/00*** | EP 2334166* | TRANSGENIC PLANTS WITH ENHANCED GROWTH CHARACTERISTICS |
| University of Maryland,US; | ***A 01N 43/46*** | EP 2334182* | METHOD OF TREATING ORGANOPHOSPHOROUS POISONING |
| University of Utrecht, NL | ***A 61K 39/095***<br>***C 07K 14/22*** | EP 2331121* | VACCINE COMPRISING PROTEIN NMBO964 FROM MEISSERIA MENINGITIDIS |
| UPM-Kymmene Wood Oy, FI | ***C 09J 7/00***<br>***C 09J 151/06***<br>***C 09J 123/26***<br>***B 32B 21/08*** | EP 2334744* | GLUE LINE MATERIAL FOR WOOD BOARD AND WOOD BOARD |
| UPM-Kymmene Wood Oy, FI | ***B 32B 15/10***<br>***B 32B 15/085***<br>***B 32B 21/08***<br>***B 27D 5/00*** | EP 2337681* | WOOD-METAL COMPOSITE STRUCTURE |
| UPM-Kymmene Wood Oy, FI | ***B 32B 21/08***<br>***B 32B 21/06***<br>***B 32B 27/10***<br>***B 32B 27/32*** | EP 2342077* | COATING FOR WOOD BOARD AND WOOD BOARD |
| Valio Ltd., FI | ***A 23C 9/00***<br>***A 23C 9/14*** | EP 2330915* | LOW-LACTOSE AND LACTOSE-FREE MILK PRODUCT AND PROCESS FOR PRODUCTION THEREOF |
| Valio Ltd., FI | ***A 23C 9/00***<br>***A 23C 9/14***<br>***A 23C 9/146***<br>***A 23C 9/142*** | EP 2334190* | LOW-LACTOSE AND LACTOSE-FREE MILK PRODUCT AND PROCESS FOR PRODUCTION THEREOF |
| Vavit S.R.L., IT | ***B 21C 37/15***<br>***B 21C 37/20***<br>***B 21D 5/08***<br>***B 21D 5/12***<br>***B 21D 15/02*** | EP 2331271* | METHOD OF PROFILING A TUBE OF GIVEN LENGTH |

| (71) | (51) | Broj objave evropske prijave patenta | (54) |
|---|---|---|---|
| Vertex Pharmceuticals Incorporated, US | ***A 61K 47/32*** | EP 2328618* | PHARMACEUTICAL COMPOSITION OF N-[2,4-BIS(1,1-DIMETHYLETHYL)-5-HYDROXYPHENYL]-1,4-DIHYDRO-4-OXOQUINOLINE-3-CARBOXAMIDE AND ADMINISTRATION THEREOF |
| Vibrosystm Inc., CA | ***G 01K 5/00***<br>***G 01K 5/48***<br>***G 01K 15/00***<br>***G 01K 5/54***<br>***G 01D 5/26***<br>***G 01K 5/52*** | EP 2095082* | FIBER OPTIC TEMPERATURE SENSOR |
| VIFOR (INTERNATIONAL) AG, CH | ***A 61M 5/50***<br>***A 61M 39/20*** | EP 2341963* | CAP ASSEMBLY AND PRODUCTION METHOD |
| Vitae Pharmaceuticals, US | ***C 07D 413/10***<br>***C 07D 413/14***<br>***A 61K 31/5355***<br>***A 61P 3/00***<br>***A 61P 19/10***<br>***A 61P 25/00*** | EP 2324017* | INHIBITORS OF 11beta-HYDROXYSTEROID DEHYDROGENASE 1 |
| Vitae Pharmaceuticals, US | ***C 07D 413/10***<br>***C 07D 413/14***<br>***A 61K 31/5355***<br>***A 61P 19/10*** | EP 2324018* | CYCLIC INHIBITORS OF 11 BETA-HYDROXYSTEROID DEHYDROGENASE 1 |
| Volpak, ES<br>Wallays, BE | ***B 65D 75/58***<br>***B 65B 31/08***<br>***B 65B 55/02***<br>***B 65D 81/20*** | EP 2323920*<br>EP 2334561* | DISCHARGE SPOUT FOR FLEXIBLE BAGS<br>SYSTEM, METHOD AND DEVICE FOR STERILIZATION AND PACKAGING FOR USE THEREFOR |
| Winloc AG, CH | ***E 05B 27/04***<br>***E 05B 15/12***<br>***E 05B 19/02***<br>***E 05B 27/10*** | EP 2331779* | A LOCK AND KEY COMBINATION WITH A LARGE NUMBER OF CODES |
| Woznica, PL | ***A 01N 57/20***<br>***A 01N 25/30***<br>***A 01N 59/02***<br>***A 01P 13/00*** | EP 2341778* | A LIQUID, HOMOGENOUS HERBICIDE COMPOSITION, A METHOD OF WEED CONTROL, A METHOD OF PRODUCTION OF LIQUID, HOMOGENOUS HERBICIDE COMPOSITION AND USE OF A LIQUID, HOMOGENOUS HERBICIDE COMPOSITION FOR WEED CONTROL |
| Wyeth LLC, US | ***A 61K 39/39*** | EP 2331126* | IMMUNOLOGICAL COMPOSITION |
| XEDA INTERNATIONAL, FR | ***A 23B 7/153***<br>***A 23B 7/16***<br>***A 23L 1/00***<br>***A 23L 1/212***<br>***A 23L 3/34***<br>***A 23L 3/3454***<br>***A 23N 15/00***<br>***A 23P 1/08*** | EP 2330914* | METHOD FOR COATING FOOD PRODUCTS |
| Xeda International, FR | ***A 23B 7/153***<br>***A 23B 7/16***<br>***A 23L 1/00***<br>***A 23L 1/212***<br>***A 23L 3/34***<br>***A 23L 3/3454***<br>***A 23N 15/00***<br>***A 23P 1/08***<br>***A 23N 15/06***<br>***B 05D 1/30*** | EP 2339922* | DEVICE FOR COATING FOOD PRODUCTS, PARTICULARLY FRUITS AND VEGETABLES |
| Xia, US | ***A 61M 11/06***<br>***A 61M 15/08***<br>***A 61M 31/00*** | EP 2326373* | METHODS FOR AMELIORATING PAIN AND DEVICES FOR DELIVERING A MEDICAMENT |

| (71) | (51) | Broj objave evropske prijave patenta | (54) |
|---|---|---|---|
| Yale University, US | ***C 07D 273/02***<br>***C 07D 209/04***<br>***C 07D 263/56***<br>***C 07D 249/18***<br>***A 61P 35/00*** | EP 2326631* | MIF MODULATORS |
| Yale University, US | ***G 01N 33/574*** | EP 2336779 | Identification of cancer protein biomarkers using proteomic techniques |
| Yski, FI | ***B 65D 90/18***<br>***B 65G 7/04*** | EP 2256066 | Method for attaching a transport wheel arrangement to a container and a transport wheel arrangment of a a container |
| Zinfandel Pharmaceuticals, US | ***C 12Q 1/68*** | EP 2324126* | METHOD OF IDENTIFYING DISEASE RISK FACTORS |

ИНДЕКС ОБЈАВЉЕНИХ ЗАХТЕВА ЗА ПРОШИРЕЊЕ ЕВРОПСКИХ ПРИЈАВА ПАТЕНАТА ПРЕМА КЛАСИФИКАЦИОНОЈ ОЗНАЦИ ПО МЕЂУНАРОДНОЈ КЛАСИФИКАЦИЈИ ПАТЕНАТА

| (51) | Broj objave evropske prijave patenta | (51) |
|---|---|---|
| ***A 01B 1/02*** | EP 2334587* | IMPROVEMENTS IN RELATION TO TOOLS |
| ***A 01B 3/42*** | EP 2238818 | Reversible plough with a device for reducing the pressure |
| ***A 01B 3/46*** | EP 2238818 | Reversible plough with a device for reducing the pressure |
| ***A 01D 41/127*** | EP 2250871 | Scalable grain tank fill level display |
| ***A 01G 1/00*** | EP 2333057 | SOLID SUPPORT COMPRISING MICROORGANISMS CAPABLE OF CONDUCTING PARALLEL MULTIPLE MINERALIZATION IMMOBILIZED THEREON, CATALYST COLUMN AND METHOD FOR PRODUCING SOLID MEDIUM FOR CULTIVATING PLANTS |
| ***A 01G 31/00*** | EP 2333057 | SOLID SUPPORT COMPRISING MICROORGANISMS CAPABLE OF CONDUCTING PARALLEL MULTIPLE MINERALIZATION IMMOBILIZED THEREON, CATALYST COLUMN AND METHOD FOR PRODUCING SOLID MEDIUM FOR CULTIVATING PLANTS |
| ***A 01H 1/00*** | EP 2342344* | SYSTEM FOR CAPTURING&MODIFYING LARGE PIECES OF GENOMIC DNA AND CONSTRUCTING ORGANISMS WITH SYNTHETIC CHLOROPLASTS |
| ***A 01H 5/00*** | EP 2328405* | PLANT GLUTAMINE PHENYLPYRUVATE TRANSAMINASE GENE AND TRANSGENIC PLANTS CARRYING SAME |
| ***A 01H 5/00*** | EP 2331694* | HERBICIDE RESISTANT SUNFLOWER PLANTS |
| ***A 01H 5/00*** | EP 2334166* | TRANSGENIC PLANTS WITH ENHANCED GROWTH CHARACTERISTICS |
| ***A 01H 5/00*** | EP 2334797* | PLANTS HAVING ENHANCED YIELD-RELATED TRAITS AND A METHOD FOR MAKING THE SAME |
| ***A 01H 5/00*** | EP 2342331* | HERBICIDE-RESISTANT AHAS-MUTANTS AND METHODS OF USE |
| ***A 01H 5/10*** | EP 2331694* | HERBICIDE RESISTANT SUNFLOWER PLANTS |
| ***A 01H 5/10*** | EP 2342331* | HERBICIDE-RESISTANT AHAS-MUTANTS AND METHODS OF USE |
| ***A 01K 11/00*** | EP 2337444* | HIGH SPEED SYSTEM FOR ELECTRONIC IDENTIFICATION OF LIVESTOCK |
| ***A 01N 1/02*** | EP 2337449* | METHOD AND INSTRUMENT FOR VITRIFICATION AND STORING OF BIOLOGICAL SPECIMEN |
| ***A 01N 25/04*** | EP 1965638* | Sustained-release microcapsules |
| ***A 01N 25/04*** | EP 2326169* | SUSPENSION CONCENTRATES IN OIL OF SULFONYLUREAS AND COMBINATIONS WITH FLUROXYPYR OR OTHER AGROCHEMICALS |
| ***A 01N 25/04*** | EP 2334174* | LIQUID ACTIVE INGREDIENT CONCENTRATES THAT CAN BE EMULSIFIED IN WATER |
| ***A 01N 25/28*** | EP 1965638* | Sustained-release microcapsules |
| ***A 01N 25/28*** | EP 2288257* | MICROENCAPSULATION PROCESS FOR PRODUCING MICROCAPSULES COMPRISING A SURFACE-MODIFIED PARTICULATE INORGANIC MATERIAL IN A CROSS-LINKED MICROCAPSULE WALL |
| ***A 01N 25/30*** | EP 2341778* | A LIQUID, HOMOGENOUS HERBICIDE COMPOSITION, A METHOD OF WEED CONTROL, A METHOD OF PRODUCTION OF LIQUID, HOMOGENOUS HERBICIDE COMPOSITION AND USE OF A LIQUID, HOMOGENOUS HERBICIDE COMPOSITION FOR WEED CONTROL |
| ***A 01N 33/18*** | EP 2334174* | LIQUID ACTIVE INGREDIENT CONCENTRATES THAT CAN BE EMULSIFIED IN WATER |
| ***A 01N 37/06*** | EP 2323487* | FUNGICIDAL COMPOSITION AND METHOD FOR CONTROLLING PLANT DISEASES |
| ***A 01N 37/10*** | EP 2326169* | SUSPENSION CONCENTRATES IN OIL OF SULFONYLUREAS AND COMBINATIONS WITH FLUROXYPYR OR OTHER AGROCHEMICALS |
| ***A 01N 37/18*** | EP 2326172* | ANTIFUNGAL AGENTS |

| (51) | Broj objave evropske prijave patenta | (51) |
|---|---|---|
| ***A 01N 37/34*** | EP 2285221* | HERBICIDAL COMPOSITIONS COMPRISING PYROXASULFONE VI |
| ***A 01N 37/36*** | EP 2334178* | COMPOSITIONS AND METHODS FOR THE TREATMENT OF BOWEL DISEASES WITH GRANULATED MESALAMINE |
| ***A 01N 37/40*** | EP 2285221* | HERBICIDAL COMPOSITIONS COMPRISING PYROXASULFONE VI |
| ***A 01N 37/40*** | EP 2326169* | SUSPENSION CONCENTRATES IN OIL OF SULFONYLUREAS AND COMBINATIONS WITH FLUROXYPYR OR OTHER AGROCHEMICALS |
| ***A 01N 37/48*** | EP 2326169* | SUSPENSION CONCENTRATES IN OIL OF SULFONYLUREAS AND COMBINATIONS WITH FLUROXYPYR OR OTHER AGROCHEMICALS |
| ***A 01N 39/02*** | EP 2326169* | SUSPENSION CONCENTRATES IN OIL OF SULFONYLUREAS AND COMBINATIONS WITH FLUROXYPYR OR OTHER AGROCHEMICALS |
| ***A 01N 39/04*** | EP 2326169* | SUSPENSION CONCENTRATES IN OIL OF SULFONYLUREAS AND COMBINATIONS WITH FLUROXYPYR OR OTHER AGROCHEMICALS |
| ***A 01N 41/10*** | EP 2326169* | SUSPENSION CONCENTRATES IN OIL OF SULFONYLUREAS AND COMBINATIONS WITH FLUROXYPYR OR OTHER AGROCHEMICALS |
| ***A 01N 43/10*** | EP 2280602* | HERBICIDE MIXTURE |
| ***A 01N 43/40*** | EP 2323487* | FUNGICIDAL COMPOSITION AND METHOD FOR CONTROLLING PLANT DISEASES |
| ***A 01N 43/40*** | EP 2326169* | SUSPENSION CONCENTRATES IN OIL OF SULFONYLUREAS AND COMBINATIONS WITH FLUROXYPYR OR OTHER AGROCHEMICALS |
| ***A 01N 43/40*** | EP 2330899* | METHODS FOR TREATING NEUROPATHIC PAIN |
| ***A 01N 43/42*** | EP 2280602* | HERBICIDE MIXTURE |
| ***A 01N 43/42*** | EP 2323487* | FUNGICIDAL COMPOSITION AND METHOD FOR CONTROLLING PLANT DISEASES |
| ***A 01N 43/46*** | EP 2334182* | METHOD OF TREATING ORGANOPHOSPHOROUS POISONING |
| ***A 01N 43/50*** | EP 2334174* | LIQUID ACTIVE INGREDIENT CONCENTRATES THAT CAN BE EMULSIFIED IN WATER |
| ***A 01N 43/54*** | EP 2343283 | OPTICALLY ACTIVE DIFLUOROMETHANESULFONANILIDE DERIVATIVE AND HERBICIDE |
| ***A 01N 43/56*** | EP 2280602* | HERBICIDE MIXTURE |
| ***A 01N 43/56*** | EP 2323487* | FUNGICIDAL COMPOSITION AND METHOD FOR CONTROLLING PLANT DISEASES |
| ***A 01N 43/58*** | EP 2285221* | HERBICIDAL COMPOSITIONS COMPRISING PYROXASULFONE VI |
| ***A 01N 43/60*** | EP 2136808* | PIPERAZINE-SUBSTITUTED PYRIDAZINONE DERIVATIVES USEFUL AS GLUCAN SYNTHASE INHIBITORS |
| ***A 01N 43/60*** | EP 2326169* | SUSPENSION CONCENTRATES IN OIL OF SULFONYLUREAS AND COMBINATIONS WITH FLUROXYPYR OR OTHER AGROCHEMICALS |
| ***A 01N 43/64*** | EP 2285221* | HERBICIDAL COMPOSITIONS COMPRISING PYROXASULFONE VI |
| ***A 01N 43/64*** | EP 2328414* | SUBSTITUTED TRIAZOLO-PYRIDAZINE DERIVATIVES |
| ***A 01N 43/653*** | EP 2323487* | FUNGICIDAL COMPOSITION AND METHOD FOR CONTROLLING PLANT DISEASES |
| ***A 01N 43/653*** | EP 2326169* | SUSPENSION CONCENTRATES IN OIL OF SULFONYLUREAS AND COMBINATIONS WITH FLUROXYPYR OR OTHER AGROCHEMICALS |
| ***A 01N 43/68*** | EP 2285221* | HERBICIDAL COMPOSITIONS COMPRISING PYROXASULFONE VI |
| ***A 01N 43/70*** | EP 2285221* | HERBICIDAL COMPOSITIONS COMPRISING PYROXASULFONE VI |
| ***A 01N 43/707*** | EP 2285221* | HERBICIDAL COMPOSITIONS COMPRISING |

| (51) | Broj objave evropske prijave patenta | (51) |
|---|---|---|
| | | PYROXASULFONE VI |
| ***A 01N 43/78*** | EP 2323487* | FUNGICIDAL COMPOSITION AND METHOD FOR CONTROLLING PLANT DISEASES |
| ***A 01N 43/78*** | EP 2334185* | COMPOSITIONS AND METHODS OF USING (R)-PRAMIPEXOLE |
| ***A 01N 43/80*** | EP 2285221* | HERBICIDAL COMPOSITIONS COMPRISING PYROXASULFONE VI |
| ***A 01N 43/80*** | EP 2326169* | SUSPENSION CONCENTRATES IN OIL OF SULFONYLUREAS AND COMBINATIONS WITH FLUROXYPYR OR OTHER AGROCHEMICALS |
| ***A 01N 43/80*** | EP 2331515* | INSCETICIDAL COMPOUNDS |
| ***A 01N 43/80*** | EP 2331535* | INSECTICIDAL COMPOUNDS |
| ***A 01N 43/80*** | EP 2332927 | NITROGEN-CONTAINING HETEROCYCLIC COMPOUND AND PEST CONTROL AGENT |
| ***A 01N 43/88*** | EP 2285221* | HERBICIDAL COMPOSITIONS COMPRISING PYROXASULFONE VI |
| ***A 01N 43/90*** | EP 2271219* | USE OF DITHIIN TETRACARBOXIMIDES FOR TREATING PHYTOPATHOGENIC FUNGI |
| ***A 01N 43/90*** | EP 2323487* | FUNGICIDAL COMPOSITION AND METHOD FOR CONTROLLING PLANT DISEASES |
| ***A 01N 43/90*** | EP 2326169* | SUSPENSION CONCENTRATES IN OIL OF SULFONYLUREAS AND COMBINATIONS WITH FLUROXYPYR OR OTHER AGROCHEMICALS |
| ***A 01N 47/14*** | EP 2323487* | FUNGICIDAL COMPOSITION AND METHOD FOR CONTROLLING PLANT DISEASES |
| ***A 01N 47/22*** | EP 2285221* | HERBICIDAL COMPOSITIONS COMPRISING PYROXASULFONE VI |
| ***A 01N 47/24*** | EP 2323487* | FUNGICIDAL COMPOSITION AND METHOD FOR CONTROLLING PLANT DISEASES |
| ***A 01N 47/28*** | EP 2328417* | COMPOUNDS, COMPOSITIONS AND METHODS FOR THE TREATMENT OF beta-AMYLOID DISEASES AND SYNUCLEINOPATHIES |
| ***A 01N 47/30*** | EP 2285221* | HERBICIDAL COMPOSITIONS COMPRISING PYROXASULFONE VI |
| ***A 01N 47/30*** | EP 2326169* | SUSPENSION CONCENTRATES IN OIL OF SULFONYLUREAS AND COMBINATIONS WITH FLUROXYPYR OR OTHER AGROCHEMICALS |
| ***A 01N 47/36*** | EP 2285221* | HERBICIDAL COMPOSITIONS COMPRISING PYROXASULFONE VI |
| ***A 01N 47/36*** | EP 2326169* | SUSPENSION CONCENTRATES IN OIL OF SULFONYLUREAS AND COMBINATIONS WITH FLUROXYPYR OR OTHER AGROCHEMICALS |
| ***A 01N 47/44*** | EP 2323487* | FUNGICIDAL COMPOSITION AND METHOD FOR CONTROLLING PLANT DISEASES |
| ***A 01N 49/00*** | EP 2334186* | USE OF VITAMIN E OR DERIVATIVES THEREOF FOR THE CONTROL OF ARTHROPODS |
| ***A 01N 51/00*** | EP 1965638* | Sustained-release microcapsules |
| ***A 01N 55/00*** | EP 2334186* | USE OF VITAMIN E OR DERIVATIVES THEREOF FOR THE CONTROL OF ARTHROPODS |
| ***A 01N 57/20*** | EP 2326169* | SUSPENSION CONCENTRATES IN OIL OF SULFONYLUREAS AND COMBINATIONS WITH FLUROXYPYR OR OTHER AGROCHEMICALS |
| ***A 01N 57/20*** | EP 2341778* | A LIQUID, HOMOGENOUS HERBICIDE COMPOSITION, A METHOD OF WEED CONTROL, A METHOD OF PRODUCTION OF LIQUID, HOMOGENOUS HERBICIDE COMPOSITION AND USE OF A LIQUID, HOMOGENOUS HERBICIDE COMPOSITION FOR WEED CONTROL |
| ***A 01N 59/00*** | EP 2323485* | ANTI-ALLERGEN COMBINATIONS OF CALCIUM AND LANTHANUM SALTS |
| ***A 01N 59/02*** | EP 2323487* | FUNGICIDAL COMPOSITION AND METHOD FOR CONTROLLING PLANT DISEASES |
| ***A 01N 59/02*** | EP 2341778* | A LIQUID, HOMOGENOUS HERBICIDE COMPOSITION, A |

| (51) | Broj objave evropske prijave patenta | (51) |
|---|---|---|
| | | METHOD OF WEED CONTROL, A METHOD OF PRODUCTION OF LIQUID, HOMOGENOUS HERBICIDE COMPOSITION AND USE OF A LIQUID, HOMOGENOUS HERBICIDE COMPOSITION FOR WEED CONTROL |
| ***A 01N 59/06*** | EP 2323485* | ANTI-ALLERGEN COMBINATIONS OF CALCIUM AND LANTHANUM SALTS |
| ***A 01N 59/08*** | EP 2323485* | ANTI-ALLERGEN COMBINATIONS OF CALCIUM AND LANTHANUM SALTS |
| ***A 01N 59/16*** | EP 2323485* | ANTI-ALLERGEN COMBINATIONS OF CALCIUM AND LANTHANUM SALTS |
| ***A 01N 61/00*** | EP 2285221* | HERBICIDAL COMPOSITIONS COMPRISING PYROXASULFONE VI |
| ***A 01P 3/00*** | EP 2271219* | USE OF DITHIIN TETRACARBOXIMIDES FOR TREATING PHYTOPATHOGENIC FUNGI |
| ***A 01P 3/00*** | EP 2323487* | FUNGICIDAL COMPOSITION AND METHOD FOR CONTROLLING PLANT DISEASES |
| ***A 01P 7/00*** | EP 2334186* | USE OF VITAMIN E OR DERIVATIVES THEREOF FOR THE CONTROL OF ARTHROPODS |
| ***A 01P 7/02*** | EP 2332927 | NITROGEN-CONTAINING HETEROCYCLIC COMPOUND AND PEST CONTROL AGENT |
| ***A 01P 7/04*** | EP 1965638* | Sustained-release microcapsules |
| ***A 01P 7/04*** | EP 2288257* | MICROENCAPSULATION PROCESS FOR PRODUCING MICROCAPSULES COMPRISING A SURFACE-MODIFIED PARTICULATE INORGANIC MATERIAL IN A CROSS-LINKED MICROCAPSULE WALL |
| ***A 01P 7/04*** | EP 2332927 | NITROGEN-CONTAINING HETEROCYCLIC COMPOUND AND PEST CONTROL AGENT |
| ***A 01P 13/00*** | EP 2334174* | LIQUID ACTIVE INGREDIENT CONCENTRATES THAT CAN BE EMULSIFIED IN WATER |
| ***A 01P 13/00*** | EP 2341778* | A LIQUID, HOMOGENOUS HERBICIDE COMPOSITION, A METHOD OF WEED CONTROL, A METHOD OF PRODUCTION OF LIQUID, HOMOGENOUS HERBICIDE COMPOSITION AND USE OF A LIQUID, HOMOGENOUS HERBICIDE COMPOSITION FOR WEED CONTROL |
| ***A 01P 13/02*** | EP 2343283 | OPTICALLY ACTIVE DIFLUOROMETHANESULFONANILIDE DERIVATIVE AND HERBICIDE |
| ***A 21C 9/02*** | EP 2324711 | Method for producing a longitudinal rod-shaped baked good |
| ***A 21C 15/00*** | EP 2324711 | Method for producing a longitudinal rod-shaped baked good |
| ***A 22C 21/00*** | EP 2248429 | Apparatus and method for conveying organ packages to a processing station |
| ***A 22C 21/06*** | EP 2248429 | Apparatus and method for conveying organ packages to a processing station |
| ***A 23B 7/153*** | EP 2330914* | METHOD FOR COATING FOOD PRODUCTS |
| ***A 23B 7/153*** | EP 2339922* | DEVICE FOR COATING FOOD PRODUCTS, PARTICULARLY FRUITS AND VEGETABLES |
| ***A 23B 7/16*** | EP 2330914* | METHOD FOR COATING FOOD PRODUCTS |
| ***A 23B 7/16*** | EP 2339922* | DEVICE FOR COATING FOOD PRODUCTS, PARTICULARLY FRUITS AND VEGETABLES |
| ***A 23C 9/00*** | EP 2330915* | LOW-LACTOSE AND LACTOSE-FREE MILK PRODUCT AND PROCESS FOR PRODUCTION THEREOF |
| ***A 23C 9/00*** | EP 2334190* | LOW-LACTOSE AND LACTOSE-FREE MILK PRODUCT AND PROCESS FOR PRODUCTION THEREOF |
| ***A 23C 9/14*** | EP 2330915* | LOW-LACTOSE AND LACTOSE-FREE MILK PRODUCT AND PROCESS FOR PRODUCTION THEREOF |
| ***A 23C 9/14*** | EP 2334190* | LOW-LACTOSE AND LACTOSE-FREE MILK PRODUCT AND PROCESS FOR PRODUCTION THEREOF |
| ***A 23C 9/142*** | EP 2334190* | LOW-LACTOSE AND LACTOSE-FREE MILK PRODUCT AND PROCESS FOR PRODUCTION THEREOF |
| ***A 23C 9/146*** | EP 2334190* | LOW-LACTOSE AND LACTOSE-FREE MILK PRODUCT AND PROCESS FOR PRODUCTION THEREOF |
| ***A 23C 9/152*** | EP 2251029 | Lactoferrin and gut neuronal health in adults and/or elderly |

| (51) | Broj objave evropske prijave patenta | (51) |
|---|---|---|
| ***A 23C 9/152*** | EP 2251030 | Lactoferrin and brain health and development in infants |
| ***A 23C 19/032*** | EP 2333056 | Liquid composition comprising an aspartic protease |
| ***A 23C 19/05*** | EP 2251029 | Lactoferrin and gut neuronal health in adults and/or elderly |
| ***A 23C 19/05*** | EP 2251030 | Lactoferrin and brain health and development in infants |
| ***A 23C 23/00*** | EP 2251029 | Lactoferrin and gut neuronal health in adults and/or elderly |
| ***A 23C 23/00*** | EP 2251030 | Lactoferrin and brain health and development in infants |
| ***A 23D 7/00*** | EP 2337460* | EMULSIFIED FOODS |
| ***A 23D 7/04*** | EP 2337460* | EMULSIFIED FOODS |
| ***A 23J 1/14*** | EP 2323499* | PRODUCTION OF CANOLA PROTEIN ISOLATE WITHOUT HEAT TREATMENT |
| ***A 23J 1/14*** | EP 2337460* | EMULSIFIED FOODS |
| ***A 23J 1/20*** | EP 2251029 | Lactoferrin and gut neuronal health in adults and/or elderly |
| ***A 23J 1/20*** | EP 2251030 | Lactoferrin and brain health and development in infants |
| ***A 23J 3/14*** | EP 2323499* | PRODUCTION OF CANOLA PROTEIN ISOLATE WITHOUT HEAT TREATMENT |
| ***A 23K 1/14*** | EP 2323499* | PRODUCTION OF CANOLA PROTEIN ISOLATE WITHOUT HEAT TREATMENT |
| ***A 23L 1/00*** | EP 2330914* | METHOD FOR COATING FOOD PRODUCTS |
| ***A 23L 1/00*** | EP 2339922* | DEVICE FOR COATING FOOD PRODUCTS, PARTICULARLY FRUITS AND VEGETABLES |
| ***A 23L 1/035*** | EP 2337460* | EMULSIFIED FOODS |
| ***A 23L 1/212*** | EP 2330914* | METHOD FOR COATING FOOD PRODUCTS |
| ***A 23L 1/212*** | EP 2337459* | PROCESS FOR PRODUCING VEGETABLE OR FRUIT PULP OR PUREE PACKAGING |
| ***A 23L 1/212*** | EP 2339922* | DEVICE FOR COATING FOOD PRODUCTS, PARTICULARLY FRUITS AND VEGETABLES |
| ***A 23L 1/22*** | EP 2324826 | HYDROPHILIC AMINO ACID-CONTAINING PREPARATION HAVING IMPROVED TASTE |
| ***A 23L 1/236*** | EP 2334203* | SWEETENER COMPOSITIONS COMPRISING REBAUDIOSIDE A, ERYTHRITOL, A DISACCHARIDE CARBOHYDRATE OR FRUCTOSE AND A TASTE-IMPROVING AMOUNT OF CELLULOSE, AND METHODS FOR THEIR MANUFACTURE |
| ***A 23L 1/24*** | EP 2337460* | EMULSIFIED FOODS |
| ***A 23L 1/29*** | EP 2251029 | Lactoferrin and gut neuronal health in adults and/or elderly |
| ***A 23L 1/29*** | EP 2251030 | Lactoferrin and brain health and development in infants |
| ***A 23L 1/29*** | EP 2330924* | IRON-CONTAINING NUTRITIONAL SUPPLEMENT |
| ***A 23L 1/30*** | EP 2330924* | IRON-CONTAINING NUTRITIONAL SUPPLEMENT |
| ***A 23L 1/302*** | EP 2330924* | IRON-CONTAINING NUTRITIONAL SUPPLEMENT |
| ***A 23L 1/303*** | EP 2330924* | IRON-CONTAINING NUTRITIONAL SUPPLEMENT |
| ***A 23L 1/304*** | EP 2330924* | IRON-CONTAINING NUTRITIONAL SUPPLEMENT |
| ***A 23L 1/305*** | EP 2251029 | Lactoferrin and gut neuronal health in adults and/or elderly |
| ***A 23L 1/305*** | EP 2251030 | Lactoferrin and brain health and development in infants |
| ***A 23L 1/305*** | EP 2323499* | PRODUCTION OF CANOLA PROTEIN ISOLATE WITHOUT HEAT TREATMENT |
| ***A 23L 1/305*** | EP 2324826 | HYDROPHILIC AMINO ACID-CONTAINING PREPARATION HAVING IMPROVED TASTE |
| ***A 23L 1/31*** | EP 2328427* | OIL COMPOSITION FOR THE PREPARATION OF OIL CONTAINING FOOD PRODUCTS |
| ***A 23L 1/314*** | EP 2328427* | OIL COMPOSITION FOR THE PREPARATION OF OIL CONTAINING FOOD PRODUCTS |
| ***A 23L 1/315*** | EP 2328427* | OIL COMPOSITION FOR THE PREPARATION OF OIL CONTAINING FOOD PRODUCTS |
| ***A 23L 1/317*** | EP 2328427* | OIL COMPOSITION FOR THE PREPARATION OF OIL CONTAINING FOOD PRODUCTS |
| ***A 23L 3/34*** | EP 2330914* | METHOD FOR COATING FOOD PRODUCTS |
| ***A 23L 3/34*** | EP 2339922* | DEVICE FOR COATING FOOD PRODUCTS, PARTICULARLY FRUITS AND VEGETABLES |
| ***A 23L 3/3454*** | EP 2330914* | METHOD FOR COATING FOOD PRODUCTS |
| ***A 23L 3/3454*** | EP 2339922* | DEVICE FOR COATING FOOD PRODUCTS, PARTICULARLY FRUITS AND VEGETABLES |
| ***A 23N 15/00*** | EP 2330914* | METHOD FOR COATING FOOD PRODUCTS |

| (51) | Broj objave evropske prijave patenta | (51) |
|---|---|---|
| ***A 23N 15/00*** | EP 2339922* | DEVICE FOR COATING FOOD PRODUCTS, PARTICULARLY FRUITS AND VEGETABLES |
| ***A 23N 15/06*** | EP 2339922* | DEVICE FOR COATING FOOD PRODUCTS, PARTICULARLY FRUITS AND VEGETABLES |
| ***A 23P 1/08*** | EP 2330914* | METHOD FOR COATING FOOD PRODUCTS |
| ***A 23P 1/08*** | EP 2339922* | DEVICE FOR COATING FOOD PRODUCTS, PARTICULARLY FRUITS AND VEGETABLES |
| ***A 43B 7/06*** | EP 2298099 | Insert for vapor-permeable and waterproof soles |
| ***A 43B 7/06*** | EP 2298100 | Vapor-permeable shoe |
| ***A 43B 7/06*** | EP 2298101 | Insert for vapor-permeable and waterproof soles |
| ***A 43B 7/12*** | EP 2298099 | Insert for vapor-permeable and waterproof soles |
| ***A 43B 7/12*** | EP 2298100 | Vapor-permeable shoe |
| ***A 43B 7/12*** | EP 2298101 | Insert for vapor-permeable and waterproof soles |
| ***A 43B 7/22*** | EP 2063730* | CUSHIONED ORTHOTIC |
| ***A 43B 17/02*** | EP 2063730* | CUSHIONED ORTHOTIC |
| ***A 45B 25/14*** | EP 2327324 | AUTOMATIC OPEN-CLOSE UMBRELLA |
| ***A 45B 25/16*** | EP 2327324 | AUTOMATIC OPEN-CLOSE UMBRELLA |
| ***A 45D 1/04*** | EP 2341794* | A HAIR CURLING DEVICE |
| ***A 45D 1/12*** | EP 2341794* | A HAIR CURLING DEVICE |
| ***A 45D 2/38*** | EP 2341794* | A HAIR CURLING DEVICE |
| ***A 46B 15/00*** | EP 2326208* | INTELLIGENT TOOTHBRUSH MONITORING DEVICE |
| ***A 47G 27/04*** | EP 2331744* | LOW WEIGHT CARPET AND CARPET TILE AND METHODS OF MANUFACTURE, SIZING AND INSTALLATION |
| ***A 47J 19/06*** | EP 2248450 | Device for handling food |
| ***A 47J 31/06*** | EP 2326223* | SYSTEM, METHOD AND CAPSULE FOR PREPARING A BEVERAGE |
| ***A 47J 31/30*** | EP 2326222* | CAN FOR THE EXTEMPORANEOUS PREPARATION OF BEVERAGES BY EXTRACTION AND/OR INFUSION, PROVIDED WITH A SAFETY LID |
| ***A 47J 31/36*** | EP 2326223* | SYSTEM, METHOD AND CAPSULE FOR PREPARING A BEVERAGE |
| ***A 47J 37/06*** | EP 2250951 | Toasting apparatus with a handle having predetermined locking positions |
| ***A 47K 3/34*** | EP 2305085 | Shower cabin with sliding door |
| ***A 61B 1/005*** | EP 2341815* | ENDOSCOPIC TRANSLUMENAL ARTICULATABLE AND STEERABLE FLEXIBLE OVERTUBE |
| ***A 61B 1/018*** | EP 2337488* | ENDOSCOPE WITH GUIDE |
| ***A 61B 1/313*** | EP 2341815* | ENDOSCOPIC TRANSLUMENAL ARTICULATABLE AND STEERABLE FLEXIBLE OVERTUBE |
| ***A 61B 3/028*** | EP 2243419 | Integral and differential visual objects for examination and optimization of vision |
| ***A 61B 5/053*** | EP 2163196 | Device for measuring the presence of foreign substances in a living organism and for individually selecting preparations for increasing an organism's life activity |
| ***A 61B 5/145*** | EP 2126556* | ELECTROCHEMICAL BIOSENSOR MEASURING SYSTEM |
| ***A 61B 5/15*** | EP 2251452 | Vessel processing |
| ***A 61B 5/15*** | EP 2251454 | Vessel coating and inspection |
| ***A 61B 5/15*** | EP 2253735 | Vessel processing |
| ***A 61B 5/157*** | EP 2341829* | INTEGRATED LANCET AND ANALYTE TESTING APPARATUS |
| ***A 61B 10/00*** | EP 2286919 | Filtration device for analyses |
| ***A 61B 17/00*** | EP 2327450 | A cover, a treatment device and a method of use of such a device |
| ***A 61B 17/00*** | EP 2337488* | ENDOSCOPE WITH GUIDE |
| ***A 61B 17/00*** | EP 2341842* | PLICATION DEVICE WITH FORMABLE LINEAR FASTENER FOR USE IN THE DIRECT PLICATION ANNULOPLASTY TREATMENT OF MITRAL VALVE REGURGITATION |
| ***A 61B 17/04*** | EP 2330986* | ENDOSCOPIC SUTURING DEVICE |
| ***A 61B 17/06*** | EP 2337505* | COLLAPSIBLE BARBED SUTURES HAVING REDUCED DRAG AND METHODS THEREFOR |
| ***A 61B 17/064*** | EP 2341842* | PLICATION DEVICE WITH FORMABLE LINEAR |

| (51) | Broj objave evropske prijave patenta | (51) |
|---|---|---|
| | | FASTENER FOR USE IN THE DIRECT PLICATION ANNULOPLASTY TREATMENT OF MITRAL VALVE REGURGITATION |
| ***A 61B 17/122*** | EP 2341842* | PLICATION DEVICE WITH FORMABLE LINEAR FASTENER FOR USE IN THE DIRECT PLICATION ANNULOPLASTY TREATMENT OF MITRAL VALVE REGURGITATION |
| ***A 61B 17/128*** | EP 2341842* | PLICATION DEVICE WITH FORMABLE LINEAR FASTENER FOR USE IN THE DIRECT PLICATION ANNULOPLASTY TREATMENT OF MITRAL VALVE REGURGITATION |
| ***A 61B 17/225*** | EP 2327450 | A cover, a treatment device and a method of use of such a device |
| ***A 61B 17/34*** | EP 2341815* | ENDOSCOPIC TRANSLUMENAL ARTICULATABLE AND STEERABLE FLEXIBLE OVERTUBE |
| ***A 61B 18/00*** | EP 2327450 | A cover, a treatment device and a method of use of such a device |
| ***A 61B 19/02*** | EP 2339982* | MEDICAL EQUIPMENT STORAGE AND TRANSPORTATION KIT |
| A 61C 5/12 | EP 1541092 | A matrix band retainer |
| ***A 61C 19/04*** | EP 2326208* | INTELLIGENT TOOTHBRUSH MONITORING DEVICE |
| ***A 61F 2/00*** | EP 2241284 | Intravasculature devices and balloons for use therewith |
| ***A 61F 2/01*** | EP 2241284 | Intravasculature devices and balloons for use therewith |
| ***A 61F 2/02*** | EP 2241284 | Intravasculature devices and balloons for use therewith |
| ***A 61F 2/06*** | EP 2341867* | RECONSTRAINABLE STENT DELIVERY SYSTEM |
| ***A 61F 2/38*** | EP 2066266* | POSTERIOR STABILIZED KNEE PROSTHESIS |
| ***A 61F 2/82*** | EP 2241284 | Intravasculature devices and balloons for use therewith |
| ***A 61F 2/84*** | EP 2241284 | Intravasculature devices and balloons for use therewith |
| ***A 61F 5/56*** | EP 2337530* | MAGNETIC IMPLANTS FOR TREATING OBSTRUCTIVE SLEEP APNEA |
| ***A 61F 9/00*** | EP 2328527* | LACRIMAL IMPLANT BODY INCLUDING COMFORTING AGENT |
| ***A 61F 9/007*** | EP 2328527* | LACRIMAL IMPLANT BODY INCLUDING COMFORTING AGENT |
| ***A 61F 13/02*** | EP 2340002* | FOAM MEDICAL DEVICES AND METHODS |
| ***A 61H 3/04*** | EP 2323610* | WALKER |
| ***A 61J 3/10*** | EP 2335915 | TABLET COMPRESSION DIE |
| ***A 61K 8/04*** | EP 2335675 | Emulsifier-free, polymer stabilised foam formulas |
| ***A 61K 8/06*** | EP 2335675 | Emulsifier-free, polymer stabilised foam formulas |
| ***A 61K 8/30*** | EP 2323639* | EMOLLIENT COMPOSITION |
| ***A 61K 8/81*** | EP 2335675 | Emulsifier-free, polymer stabilised foam formulas |
| ***A 61K 8/92*** | EP 2323639* | EMOLLIENT COMPOSITION |
| ***A 61K 9/00*** | EP 2081553* | STABLE ANTIBODY FORMULATIONS |
| ***A 61K 9/00*** | EP 2086504* | DICLOFENAC GEL |
| ***A 61K 9/00*** | EP 2326304* | METHODS FOR ENHANCING THE STABILITY OF POLYORTHOESTERS AND THEIR FORMULATIONS |
| ***A 61K 9/00*** | EP 2331065* | MODIFIED RELEASE EMULSIONS FOR APPLICATION TO SKIN OR VAGINAL MUCOSA |
| ***A 61K 9/00*** | EP 2331067* | PROGESTIN-CONTAINING DRUG DELIVERY SYSTEM |
| ***A 61K 9/00*** | EP 2331587* | VINYL ALCOHOL CO-POLYMER CRYOGELS, VINYL ALCOHOL CO-POLYMERS, AND METHODS AND PRODUCTS THEREOF |
| ***A 61K 9/00*** | EP 2341895* | HYALURONIC ACID CRYOGEL - COMPOSITIONS, USES, PROCESSES FOR MANUFACTURING |
| ***A 61K 9/06*** | EP 2086504* | DICLOFENAC GEL |
| ***A 61K 9/06*** | EP 2331065* | MODIFIED RELEASE EMULSIONS FOR APPLICATION TO SKIN OR VAGINAL MUCOSA |
| ***A 61K 9/06*** | EP 2340016* | TOPICAL FORMULATION OF 3-(2,2,2-TRIMETHYLHYDRAZINIUM) PROPIONATE DIHYDRATE |
| ***A 61K 9/06*** | EP 2341895* | HYALURONIC ACID CRYOGEL - COMPOSITIONS, USES, PROCESSES FOR MANUFACTURING |
| ***A 61K 9/08*** | EP 2326306* | LIQUID FORMULATIONS OF BENDAMUSTINE |
| ***A 61K 9/10*** | EP 2324826 | HYDROPHILIC AMINO ACID-CONTAINING PREPARATION HAVING IMPROVED TASTE |

| (51) | Broj objave evropske prijave patenta | (51) |
|---|---|---|
| ***A 61K 9/107*** | EP 2331065* | MODIFIED RELEASE EMULSIONS FOR APPLICATION TO SKIN OR VAGINAL MUCOSA |
| ***A 61K 9/12*** | EP 2343370 | A THROBIN-LIKE ENZYME OF AGKISTRODON ACUTUS |
| ***A 61K 9/14*** | EP 1980244 | Basis particles and orally-disintegrating tablet containing them |
| ***A 61K 9/14*** | EP 2324826 | HYDROPHILIC AMINO ACID-CONTAINING PREPARATION HAVING IMPROVED TASTE |
| ***A 61K 9/14*** | EP 2331629* | STARCH-BASED MICROPARTICLES FOR THE RELEASE OF AGENTS DISPOSED THEREIN |
| ***A 61K 9/16*** | EP 2323626* | PARENTERAL COMPOSITION COMPRISING MICROSPHERES WITH A DIAMETER BETWEEN 10 AND 20 MICRONS |
| ***A 61K 9/16*** | EP 2328601* | LINACLOTIDE-CONTAINING FORMULATIONS FOR ORAL ADMINISTRATION |
| ***A 61K 9/16*** | EP 2331067* | PROGESTIN-CONTAINING DRUG DELIVERY SYSTEM |
| ***A 61K 9/16*** | EP 2331077* | STABLE FORLULATION COMPRISING THERAPEUTIC POLYPEPTIDES FOR ORAL ADMINISTRATION |
| ***A 61K 9/19*** | EP 2081553* | STABLE ANTIBODY FORMULATIONS |
| ***A 61K 9/19*** | EP 2343370 | A THROBIN-LIKE ENZYME OF AGKISTRODON ACUTUS |
| ***A 61K 9/20*** | EP 2099430* | PH SENSITIVE MATRIX FORMULATION |
| ***A 61K 9/20*** | EP 2120883* | PHARMACEUTICAL COMPOSITION COMPRISING A SALT OF ROSIGLITAZONE |
| ***A 61K 9/20*** | EP 2324826 | HYDROPHILIC AMINO ACID-CONTAINING PREPARATION HAVING IMPROVED TASTE |
| ***A 61K 9/20*** | EP 2326326* | PURIN DERIVATIVES FOR USE IN THE TREATMENT OF FAB-RELATED DISEASES |
| ***A 61K 9/20*** | EP 2328562* | GALENICAL FORMULATION COMPRISING ALISKIREN AND PROCESS FOR ITS PREPARATION BY MELT EXTRUSION GRANULATION |
| ***A 61K 9/20*** | EP 2328564* | FIXED DOSE COMBINATION IN FORM OF A BILAYERED OR MONOLAYERED TABLET OF ALISKIREN AND AMLODIPINE |
| ***A 61K 9/20*** | EP 2328601* | LINACLOTIDE-CONTAINING FORMULATIONS FOR ORAL ADMINISTRATION |
| ***A 61K 9/20*** | EP 2331077* | STABLE FORLULATION COMPRISING THERAPEUTIC POLYPEPTIDES FOR ORAL ADMINISTRATION |
| ***A 61K 9/20*** | EP 2341898* | STABLE SOLID FORMULATIONS OF GC-C RECEPTOR AGONIST POLYPEPTIDES SUITABLE FOR ORAL ADMINISTRATION |
| ***A 61K 9/22*** | EP 2323634* | ROPINIROLE COMPOSITION |
| ***A 61K 9/22*** | EP 2326312* | PALIPERIDONE COMPOSITION COMPRISING SOLID MATRIX PARTICLES |
| ***A 61K 9/22*** | EP 2343071 | Pharmaceutical dosage forms |
| ***A 61K 9/26*** | EP 1980244 | Basis particles and orally-disintegrating tablet containing them |
| ***A 61K 9/28*** | EP 2120883* | PHARMACEUTICAL COMPOSITION COMPRISING A SALT OF ROSIGLITAZONE |
| ***A 61K 9/28*** | EP 2323634* | ROPINIROLE COMPOSITION |
| ***A 61K 9/28*** | EP 2326312* | PALIPERIDONE COMPOSITION COMPRISING SOLID MATRIX PARTICLES |
| ***A 61K 9/28*** | EP 2326324* | USE OF DRONEDARONE FOR THE PREPARATION OF A MEDICAMENT FOR THE PREVENTION OF STROKE OR TRANSIENT ISCHEMIC ATTACK |
| ***A 61K 9/32*** | EP 2343071 | Pharmaceutical dosage forms |
| ***A 61K 9/48*** | EP 2324826 | HYDROPHILIC AMINO ACID-CONTAINING PREPARATION HAVING IMPROVED TASTE |
| ***A 61K 9/48*** | EP 2326312* | PALIPERIDONE COMPOSITION COMPRISING SOLID MATRIX PARTICLES |
| ***A 61K 9/48*** | EP 2328601* | LINACLOTIDE-CONTAINING FORMULATIONS FOR ORAL ADMINISTRATION |
| ***A 61K 9/48*** | EP 2331077* | STABLE FORLULATION COMPRISING THERAPEUTIC POLYPEPTIDES FOR ORAL ADMINISTRATION |
| ***A 61K 9/48*** | EP 2341898* | STABLE SOLID FORMULATIONS OF GC-C RECEPTOR AGONIST POLYPEPTIDES SUITABLE FOR ORAL |

| (51) | Broj objave evropske prijave patenta | (51) |
|---|---|---|
| | | ADMINISTRATION |
| ***A 61K 9/50*** | EP 2328601* | LINACLOTIDE-CONTAINING FORMULATIONS FOR ORAL ADMINISTRATION |
| ***A 61K 9/50*** | EP 2331077* | STABLE FORLULATION COMPRISING THERAPEUTIC POLYPEPTIDES FOR ORAL ADMINISTRATION |
| ***A 61K 9/50*** | EP 2331083* | PROLONGED RELEASE MULTIPARTICULATE PHARMACEUTICAL COMPOSITION COMPRISING PALIPERIDONE |
| ***A 61K 9/50*** | EP 2334302* | DOSAGE FORMS FOR WEAKLY IONIZABLE COMPOUNDS |
| ***A 61K 9/70*** | EP 2331067* | PROGESTIN-CONTAINING DRUG DELIVERY SYSTEM |
| ***A 61K 9/70*** | EP 2343370 | A THROBIN-LIKE ENZYME OF AGKISTRODON ACUTUS |
| ***A 61K 31/01*** | EP 2323639* | EMOLLIENT COMPOSITION |
| ***A 61K 31/047*** | EP 2323639* | EMOLLIENT COMPOSITION |
| ***A 61K 31/137*** | EP 2124914* | METHOD AND SYSTEM FOR ENHANCING SELF-TREATMENT OF ONYCHOMYCOSIS |
| ***A 61K 31/14*** | EP 2323642* | USE OF ENHANCERS, POSSIBLY ASSOCIATED TO RIBOFLAVIN, AS WELL AS CORRESPONDING OPHTHALMIC COMPOSITIONS FOR CORNEAL CROSS-LINKING IN THE TREATMENT OF THE KERATOCONUS OR OF OTHER CORNEAL ECTASIC DISORDERS |
| ***A 61K 31/15*** | EP 2186511 | Method of treating sleep disorders using eplivanserin |
| ***A 61K 31/155*** | EP 2099430* | PH SENSITIVE MATRIX FORMULATION |
| ***A 61K 31/165*** | EP 2137152* | NOVEL BENZAMIDE DERIVATIVES AND PROCESS FOR THE PREPARATION THEREOF |
| ***A 61K 31/165*** | EP 2328562* | GALENICAL FORMULATION COMPRISING ALISKIREN AND PROCESS FOR ITS PREPARATION BY MELT EXTRUSION GRANULATION |
| ***A 61K 31/166*** | EP 2323970* | CYCLOHEXYL AMIDE DERIVATIVES AND THEIR USE AS CRF-1 RECEPTOR ANTAGONISTS |
| ***A 61K 31/167*** | EP 2340242* | COMPOUNDS FOR TREATING OPHTHALMIC DISEASES AND DISORDERS |
| ***A 61K 31/18*** | EP 2323646* | USE OF STEROID SULFATASE INHIBITORS FOR THE TREATMENT OF PRETERM LABOR |
| ***A 61K 31/18*** | EP 2340242* | COMPOUNDS FOR TREATING OPHTHALMIC DISEASES AND DISORDERS |
| ***A 61K 31/185*** | EP 2326319* | CONJUGATED SURAMIN AMINO COMPOUNDS FOR MEDICAL CONDITIONS |
| ***A 61K 31/19*** | EP 2323642* | USE OF ENHANCERS, POSSIBLY ASSOCIATED TO RIBOFLAVIN, AS WELL AS CORRESPONDING OPHTHALMIC COMPOSITIONS FOR CORNEAL CROSS-LINKING IN THE TREATMENT OF THE KERATOCONUS OR OF OTHER CORNEAL ECTASIC DISORDERS |
| ***A 61K 31/195*** | EP 2323642* | USE OF ENHANCERS, POSSIBLY ASSOCIATED TO RIBOFLAVIN, AS WELL AS CORRESPONDING OPHTHALMIC COMPOSITIONS FOR CORNEAL CROSS-LINKING IN THE TREATMENT OF THE KERATOCONUS OR OF OTHER CORNEAL ECTASIC DISORDERS |
| ***A 61K 31/196*** | EP 2086504* | DICLOFENAC GEL |
| ***A 61K 31/198*** | EP 2324826 | HYDROPHILIC AMINO ACID-CONTAINING PREPARATION HAVING IMPROVED TASTE |
| ***A 61K 31/198*** | EP 2337779* | 2-OXO-1,2-DIHYDRO-QUINOLINE MODULATORS OF IMMUNE FUNCTION |
| ***A 61K 31/205*** | EP 2340016* | TOPICAL FORMULATION OF 3-(2,2,2-TRIMETHYLHYDRAZINIUM) PROPIONATE DIHYDRATE |
| ***A 61K 31/216*** | EP 2331091* | PHARMACEUTICAL COMBINATION OF 1-(2-TETRAHYDROFURYL)-5-FLUOROURACIL AND CAFFEIC ACID PHENETHYL ESTER FOR ORAL TREATING OF TUMORS |
| ***A 61K 31/22*** | EP 2120920* | OXYLIPINS FROM LONG CHAIN POLYUNSATURATED FATTY ACIDS AND METHODS OF MAKING AND USING THE SAME |
| ***A 61K 31/23*** | EP 2323647* | LONG-TERM TREATMENT OF SYMPTOMATIC HEART |

| (51) | Broj objave evropske prijave patenta | (51) |
|---|---|---|
| | | FAILURE |
| ***A 61K 31/343*** | EP 2326324* | USE OF DRONEDARONE FOR THE PREPARATION OF A MEDICAMENT FOR THE PREVENTION OF STROKE OR TRANSIENT ISCHEMIC ATTACK |
| ***A 61K 31/343*** | EP 2328893* | TRIAZOLE COMPOUNDS THAT MODULATE HSP90 ACTIVITY |
| ***A 61K 31/343*** | EP 2337559* | METHOD OF TREATING ATRIAL FIBRILLATION |
| ***A 61K 31/345*** | EP 2331065* | MODIFIED RELEASE EMULSIONS FOR APPLICATION TO SKIN OR VAGINAL MUCOSA |
| ***A 61K 31/352*** | EP 2323642* | USE OF ENHANCERS, POSSIBLY ASSOCIATED TO RIBOFLAVIN, AS WELL AS CORRESPONDING OPHTHALMIC COMPOSITIONS FOR CORNEAL CROSS-LINKING IN THE TREATMENT OF THE KERATOCONUS OR OF OTHER CORNEAL ECTASIC DISORDERS |
| ***A 61K 31/353*** | EP 2033641 | Process of preparation of extracts rich in proanthocyanidins |
| ***A 61K 31/353*** | EP 2324002* | PROCESSES FOR THE PREPARATION OF SGLT2 INHIBITORS |
| ***A 61K 31/353*** | EP 2342188* | CHROMENONE ANALOGS AS SIRTUIN MODULATORS |
| ***A 61K 31/357*** | EP 2326635* | NOVEL SUBSTITUTED SULFAMIDE DERIVATIVES |
| ***A 61K 31/357*** | EP 2334687* | DIOXA-BICYCLO[3.2.1.]OCTANE-2,3,4-TRIOL DERIVATIVES |
| ***A 61K 31/36*** | EP 2326653* | NEW (POLY)AMINOALKYLAMINOALKYLAMIDE, ALKYL-UREA, OR ALKYL-SULFONAMIDE DERIVATIVES OF EPIPODOPHYLLOTOXIN, A PROCESS FOR PREPARING THEM, AND APPLICATION THEREOF IN THERAPY AS ANTICANCER AGENTS |
| ***A 61K 31/381*** | EP 2099791* | THIENYL-CONTAINING GLYCOPYRANOSYL DERIVATIVES AS ANTIDIABETICS |
| ***A 61K 31/381*** | EP 2324015* | THIOPHENE-2-CARBOXAMIDE DERIVATIVES, PREPARATION THEREOF AND THERAPEUTIC USE THEREOF |
| ***A 61K 31/397*** | EP 2324015* | THIOPHENE-2-CARBOXAMIDE DERIVATIVES, PREPARATION THEREOF AND THERAPEUTIC USE THEREOF |
| ***A 61K 31/40*** | EP 2253614 | Inhibitors of IAP |
| ***A 61K 31/40*** | EP 2323650* | TREATMENT FOR DIABETES IN PATIENTS INAPPROPRIATE FOR METFORMIN THERAPY |
| ***A 61K 31/40*** | EP 2326326* | PURIN DERIVATIVES FOR USE IN THE TREATMENT OF FAB-RELATED DISEASES |
| ***A 61K 31/40*** | EP 2340021* | SUBSTITUTED PYRROLIDINE-2-CARBOXAMIDES |
| ***A 61K 31/4025*** | EP 2253614 | Inhibitors of IAP |
| ***A 61K 31/4025*** | EP 2323650* | TREATMENT FOR DIABETES IN PATIENTS INAPPROPRIATE FOR METFORMIN THERAPY |
| ***A 61K 31/4025*** | EP 2337781* | ANTI-VIRAL COMPOUNDS TO TREAT HCV INFECTION |
| ***A 61K 31/4025*** | EP 2340021* | SUBSTITUTED PYRROLIDINE-2-CARBOXAMIDES |
| ***A 61K 31/403*** | EP 2107907* | Combination of pemirolast and ramatroban for use in the treatment of inflammatory disorders |
| ***A 61K 31/403*** | EP 2323650* | TREATMENT FOR DIABETES IN PATIENTS INAPPROPRIATE FOR METFORMIN THERAPY |
| ***A 61K 31/403*** | EP 2326326* | PURIN DERIVATIVES FOR USE IN THE TREATMENT OF FAB-RELATED DISEASES |
| ***A 61K 31/403*** | EP 2326621* | SUBSTITUTED 1,2,3,4-TETRAHYDROCYCLOPENTA[b]INDOL-3-YL) ACETIC ACID DERIVATIVES USEFUL IN THE TREATMENT OF AUTOIMMUNE AND INFLAMMATORY DISORDERS |
| ***A 61K 31/403*** | EP 2341906* | HEMATOPOIETIC PROTECTION AGAINST IONIZING RADIATION USING SELECTIVE CYCLIN-DEPENDENT KINASE 4/6 INHIBITORS |
| ***A 61K 31/404*** | EP 2323634* | ROPINIROLE COMPOSITION |
| ***A 61K 31/407*** | EP 2341911* | HEMATOPOIETIC PROTECTION AGAINST CHEMOTHERAPEUTIC COMPOUNDS USING SELECTIVE CYCLIN-DEPENDENT KINASE 4/6 INHIBITORS |

| (51) | Broj objave evropske prijave patenta | (51) |
|---|---|---|
| ***A 61K 31/407*** | EP 2342205* | SUBSTITUTED TRICYCLIC ACID DERIVATIVES AS S1P1 RECEPTOR AGONISTS USEFUL IN THE TREATMENT OF AUTOIMMUNE AND INFLAMMATORY DISORDERS |
| ***A 61K 31/41*** | EP 2068869* | NOVEL IMIDAZOTHIAZOLES AND IMIDAZOXAZOLES |
| ***A 61K 31/41*** | EP 2328414* | SUBSTITUTED TRIAZOLO-PYRIDAZINE DERIVATIVES |
| ***A 61K 31/41*** | EP 2328562* | GALENICAL FORMULATION COMPRISING ALISKIREN AND PROCESS FOR ITS PREPARATION BY MELT EXTRUSION GRANULATION |
| ***A 61K 31/41*** | EP 2334668* | PROCESS FOR PREPARING OLMESARTAN MEDOXOMIL INTERMEDIATE |
| ***A 61K 31/4164*** | EP 2124914* | METHOD AND SYSTEM FOR ENHANCING SELF-TREATMENT OF ONYCHOMYCOSIS |
| ***A 61K 31/4164*** | EP 2331065* | MODIFIED RELEASE EMULSIONS FOR APPLICATION TO SKIN OR VAGINAL MUCOSA |
| ***A 61K 31/4168*** | EP 2335701 | Heterocyclic aspartyl protease inhibitors |
| ***A 61K 31/4168*** | EP 2343069 | Heterocyclic aspartyl protease inhibitors |
| ***A 61K 31/4174*** | EP 2331065* | MODIFIED RELEASE EMULSIONS FOR APPLICATION TO SKIN OR VAGINAL MUCOSA |
| ***A 61K 31/4178*** | EP 2335701 | Heterocyclic aspartyl protease inhibitors |
| ***A 61K 31/4178*** | EP 2337781* | ANTI-VIRAL COMPOUNDS TO TREAT HCV INFECTION |
| ***A 61K 31/4178*** | EP 2342194* | OXOAZETIDINE DERIVATIVES, PROCESS FOR THE PREPARATION THEREOF AND USE THEREOF IN HUMAN MEDICINE AND IN COSMETICS |
| ***A 61K 31/4178*** | EP 2343069 | Heterocyclic aspartyl protease inhibitors |
| ***A 61K 31/4184*** | EP 2326306* | LIQUID FORMULATIONS OF BENDAMUSTINE |
| ***A 61K 31/4184*** | EP 2332535 | SOLID PHARMACEUTICAL COMPOSITION |
| ***A 61K 31/4184*** | EP 2337781* | ANTI-VIRAL COMPOUNDS TO TREAT HCV INFECTION |
| ***A 61K 31/4196*** | EP 2323737* | TRIAZOLE COMPOUNDS THAT MODULATE HSP90 ACTIVITY |
| ***A 61K 31/4196*** | EP 2326326* | PURIN DERIVATIVES FOR USE IN THE TREATMENT OF FAB-RELATED DISEASES |
| ***A 61K 31/4196*** | EP 2328879* | COMPOUNDS, COMPOSITIONS AND METHODS OF USING SAME FOR MODULATING URIC ACID LEVELS |
| ***A 61K 31/4196*** | EP 2328893* | TRIAZOLE COMPOUNDS THAT MODULATE HSP90 ACTIVITY |
| ***A 61K 31/4196*** | EP 2337781* | ANTI-VIRAL COMPOUNDS TO TREAT HCV INFECTION |
| ***A 61K 31/4196*** | EP 2342200* | COMPOUNDS WHICH SELECTIVELY MODULATE THE CB2 RECEPTOR |
| ***A 61K 31/42*** | EP 2331534* | BENZOXAZOLES, BENZTHIAZOLES AND RELATED ANALOGS AS SIRTUIN MODULATORS |
| ***A 61K 31/42*** | EP 2342200* | COMPOUNDS WHICH SELECTIVELY MODULATE THE CB2 RECEPTOR |
| ***A 61K 31/422*** | EP 2323650* | TREATMENT FOR DIABETES IN PATIENTS INAPPROPRIATE FOR METFORMIN THERAPY |
| ***A 61K 31/422*** | EP 2326326* | PURIN DERIVATIVES FOR USE IN THE TREATMENT OF FAB-RELATED DISEASES |
| ***A 61K 31/423*** | EP 2331534* | BENZOXAZOLES, BENZTHIAZOLES AND RELATED ANALOGS AS SIRTUIN MODULATORS |
| ***A 61K 31/424*** | EP 2328902* | PYRAZOLO [5,1-B]OXAZOLE DERIVATIVES AS CRF1 ANTAGONISTS |
| ***A 61K 31/424*** | EP 2328903* | SPIRO-TETRACYCLIC RING COMPOUNDS AS BETASECRETASE MODULATORS AND METHODS OF USE |
| ***A 61K 31/425*** | EP 2334185* | COMPOSITIONS AND METHODS OF USING (R)-PRAMIPEXOLE |
| ***A 61K 31/427*** | EP 2120883* | PHARMACEUTICAL COMPOSITION COMPRISING A SALT OF ROSIGLITAZONE |
| ***A 61K 31/427*** | EP 2323970* | CYCLOHEXYL AMIDE DERIVATIVES AND THEIR USE AS CRF-1 RECEPTOR ANTAGONISTS |
| ***A 61K 31/429*** | EP 2328903* | SPIRO-TETRACYCLIC RING COMPOUNDS AS BETASECRETASE MODULATORS AND METHODS OF USE |
| ***A 61K 31/433*** | EP 2334670* | NEW 2-AMIDOTHIADIAZOLE DERIVATIVES |
| ***A 61K 31/435*** | EP 2099760* | ANTIBACTERIAL QUINOLINE DERIVATIVES |

| (51) | Broj objave evropske prijave patenta | (51) |
|---|---|---|
| ***A 61K 31/4355*** | EP 2069354* | Aza-benzofuranyl compounds and methods of use |
| ***A 61K 31/437*** | EP 2121687* | TRICYCLIC AMINE DERIVATIVES AS PROTEIN TYROSINE KINASE INHIBITORS |
| ***A 61K 31/437*** | EP 2253614 | Inhibitors of IAP |
| ***A 61K 31/437*** | EP 2334299* | PHARMACEUTICAL COMPOSITION COMPRISING GABOXADOL AND AN INHIBITOR OF PATL OR OAT |
| ***A 61K 31/437*** | EP 2342203* | PYRAZOLO PYRIDINE DERIVATIVES AS NADPH OXIDASE INHIBITORS |
| ***A 61K 31/437*** | EP 2342205* | SUBSTITUTED TRICYCLIC ACID DERIVATIVES AS S1P1 RECEPTOR AGONISTS USEFUL IN THE TREATMENT OF AUTOIMMUNE AND INFLAMMATORY DISORDERS |
| ***A 61K 31/4375*** | EP 2323650* | TREATMENT FOR DIABETES IN PATIENTS INAPPROPRIATE FOR METFORMIN THERAPY |
| ***A 61K 31/438*** | EP 2331523* | PYRIDINE AND PYRIMIDINE BASED COMPOUNDS AS WNT SIGNALING PATHWAY INHIBITORS FOR THE TREATMENT OF CANCER |
| ***A 61K 31/439*** | EP 2069346* | ACETAMIDE AND CARBOXAMIDE DERIVATIVES OF AZAADAMANTANE AND METHODS OF USE THEREOF |
| ***A 61K 31/44*** | EP 2061474* | SOLID CITRATE AND TARTRATE SALTS OF DPP-IV INHIBITORS |
| ***A 61K 31/44*** | EP 2323657* | OPHTHALMIC PHARMACEUTICAL COMPOSITIONS COMPRISING SORAFENIB FOR THE TREATMENT OF NEOANGIOGENIC PATHOLOGIES OF THE EYE |
| ***A 61K 31/44*** | EP 2323970* | CYCLOHEXYL AMIDE DERIVATIVES AND THEIR USE AS CRF-1 RECEPTOR ANTAGONISTS |
| ***A 61K 31/44*** | EP 2326326* | PURIN DERIVATIVES FOR USE IN THE TREATMENT OF FAB-RELATED DISEASES |
| ***A 61K 31/44*** | EP 2328874* | COMPOUNDS, COMPOSITIONS AND METHODS OF USING SAME FOR MODULATING URIC ACID LEVELS |
| ***A 61K 31/44*** | EP 2331522* | TETRAHYDROPYRIDINYL AND DIHYDROPYRROLYL COMPOUNDS AND THE USE THEREOF |
| ***A 61K 31/4412*** | EP 2324831 | Methods of administering pirfenidone therapy |
| ***A 61K 31/4412*** | EP 2331065* | MODIFIED RELEASE EMULSIONS FOR APPLICATION TO SKIN OR VAGINAL MUCOSA |
| ***A 61K 31/4412*** | EP 2343070 | Pirfenidone treatment for patients with atypical liver function |
| ***A 61K 31/4418*** | EP 2328869* | HETEROARYL ANTAGONISTS OF PROSTAGLANDIN D2 RECEPTORS |
| ***A 61K 31/4418*** | EP 2331065* | MODIFIED RELEASE EMULSIONS FOR APPLICATION TO SKIN OR VAGINAL MUCOSA |
| ***A 61K 31/4422*** | EP 2332535 | SOLID PHARMACEUTICAL COMPOSITION |
| ***A 61K 31/443*** | EP 2328891* | NEW BENZOFURANS SUITABLE AS PRECURSORS TO COMPOUNDS THAT ARE USEFUL FOR IMAGING AMYLOID DEPOSITS |
| ***A 61K 31/443*** | EP 2341906* | HEMATOPOIETIC PROTECTION AGAINST IONIZING RADIATION USING SELECTIVE CYCLIN-DEPENDENT KINASE 4/6 INHIBITORS |
| ***A 61K 31/4439*** | EP 2323650* | TREATMENT FOR DIABETES IN PATIENTS INAPPROPRIATE FOR METFORMIN THERAPY |
| ***A 61K 31/4439*** | EP 2337781* | ANTI-VIRAL COMPOUNDS TO TREAT HCV INFECTION |
| ***A 61K 31/444*** | EP 2334673* | PYRIDO[3,2-d]PYRIDAZINE-2(1H)-ONE COMPOUNDS AS P38 MODULATORS AND METHODS OF USE THEREOF |
| ***A 61K 31/444*** | EP 2342203* | PYRAZOLO PYRIDINE DERIVATIVES AS NADPH OXIDASE INHIBITORS |
| ***A 61K 31/445*** | EP 2137152* | NOVEL BENZAMIDE DERIVATIVES AND PROCESS FOR THE PREPARATION THEREOF |
| ***A 61K 31/445*** | EP 2324015* | THIOPHENE-2-CARBOXAMIDE DERIVATIVES, PREPARATION THEREOF AND THERAPEUTIC USE THEREOF |
| ***A 61K 31/445*** | EP 2328868* | NOVEL COMPOUNDS ACTIVE AS MUSCARINIC RECEPTOR ANTAGONISTS |
| ***A 61K 31/445*** | EP 2330899* | METHODS FOR TREATING NEUROPATHIC PAIN |
| ***A 61K 31/445*** | EP 2331097* | METHODS FOR TREATING CNS DISORDERS |

| (51) | Broj objave evropske prijave patenta | (51) |
|---|---|---|
| ***A 61K 31/4523*** | EP 2328583* | NEW THERAPEUTIC USE OF DROTAVERINE |
| ***A 61K 31/4525*** | EP 2324031* | NITROGENATED DERIVATIVES OF PANCRATISTATIN |
| ***A 61K 31/4535*** | EP 2324015* | THIOPHENE-2-CARBOXAMIDE DERIVATIVES, PREPARATION THEREOF AND THERAPEUTIC USE THEREOF |
| ***A 61K 31/454*** | EP 2331523* | PYRIDINE AND PYRIMIDINE BASED COMPOUNDS AS WNT SIGNALING PATHWAY INHIBITORS FOR THE TREATMENT OF CANCER |
| ***A 61K 31/4545*** | EP 2324015* | THIOPHENE-2-CARBOXAMIDE DERIVATIVES, PREPARATION THEREOF AND THERAPEUTIC USE THEREOF |
| ***A 61K 31/4545*** | EP 2331523* | PYRIDINE AND PYRIMIDINE BASED COMPOUNDS AS WNT SIGNALING PATHWAY INHIBITORS FOR THE TREATMENT OF CANCER |
| ***A 61K 31/47*** | EP 2125777* | SPIRO SUBSTITUTED COMPOUNDS AS ANGIOGENESIS INHIBITORS |
| ***A 61K 31/47*** | EP 2137155* | QUINOLINE DERIVATIVES, PHARMACEUTICAL COMPOSITIONS COMPRISING THEM, AND THEIR USE IN TREATING CENTRAL NERVOUS SYSTEM AND PERIPHERAL DISEASES |
| ***A 61K 31/47*** | EP 2241318 | Method for treatment of constipation-predominant irritable bowel syndrome |
| ***A 61K 31/47*** | EP 2334677* | TRIAZOLOPYRIDINE COMPOUNDS AS PIM KINASE INHIBITORS |
| ***A 61K 31/47*** | EP 2337779* | 2-OXO-1,2-DIHYDRO-QUINOLINE MODULATORS OF IMMUNE FUNCTION |
| ***A 61K 31/47*** | EP 2341906* | HEMATOPOIETIC PROTECTION AGAINST IONIZING RADIATION USING SELECTIVE CYCLIN-DEPENDENT KINASE 4/6 INHIBITORS |
| ***A 61K 31/4709*** | EP 2331538* | CRYSTALLINE FORMS OF A 2-THIAZOLYL- 4-QUINOLINYL-OXY DERIVATIVE, A POTENT HCV INHIBITOR |
| ***A 61K 31/472*** | EP 2331137* | NEW COMBINATION OF ACTIVE INGREDIENTS CONTAINING AN ALPHA-1ANTAGONIST AND A PDE 4 INHIBITOR |
| ***A 61K 31/472*** | EP 2342182* | ISOQUINOLINONE DERIVATIVES AS NK3 ANTAGONISTS |
| ***A 61K 31/473*** | EP 2323642* | USE OF ENHANCERS, POSSIBLY ASSOCIATED TO RIBOFLAVIN, AS WELL AS CORRESPONDING OPHTHALMIC COMPOSITIONS FOR CORNEAL CROSS-LINKING IN THE TREATMENT OF THE KERATOCONUS OR OF OTHER CORNEAL ECTASIC DISORDERS |
| ***A 61K 31/473*** | EP 2324031* | NITROGENATED DERIVATIVES OF PANCRATISTATIN |
| ***A 61K 31/473*** | EP 2326326* | PURIN DERIVATIVES FOR USE IN THE TREATMENT OF FAB-RELATED DISEASES |
| ***A 61K 31/4745*** | EP 2331065* | MODIFIED RELEASE EMULSIONS FOR APPLICATION TO SKIN OR VAGINAL MUCOSA |
| ***A 61K 31/485*** | EP 2326651* | BUPRENORPHINE ANALOGS |
| ***A 61K 31/485*** | EP 2343071 | Pharmaceutical dosage forms |
| ***A 61K 31/49*** | EP 2323642* | USE OF ENHANCERS, POSSIBLY ASSOCIATED TO RIBOFLAVIN, AS WELL AS CORRESPONDING OPHTHALMIC COMPOSITIONS FOR CORNEAL CROSS-LINKING IN THE TREATMENT OF THE KERATOCONUS OR OF OTHER CORNEAL ECTASIC DISORDERS |
| ***A 61K 31/495*** | EP 2323992* | 5-ALKYNYL-PYRIMIDINES |
| ***A 61K 31/495*** | EP 2337559* | METHOD OF TREATING ATRIAL FIBRILLATION |
| ***A 61K 31/496*** | EP 2139482* | TREATMENT FOR MULTIPLE MYELOMA |
| ***A 61K 31/496*** | EP 2326326* | PURIN DERIVATIVES FOR USE IN THE TREATMENT OF FAB-RELATED DISEASES |
| ***A 61K 31/496*** | EP 2328872* | PYRAZOLE COMPOUNDS 436 |
| ***A 61K 31/496*** | EP 2331548* | PROTEASE INHIBITORS |
| ***A 61K 31/497*** | EP 2323663* | 4-AMINO-3-(IMIDAZOLYL)-PYRAZOLO[3,4-D]PYRIMIDINES |

| (51) | Broj objave evropske prijave patenta | (51) |
|---|---|---|
| ***A 61K 31/498*** | EP 2324013* | SUBSTITUTED-QUINOXALINE-TYPE BRIDGED-PIPERIDINE COMPOUNDS AND THE USES THEREOF |
| ***A 61K 31/4985*** | EP 2323650* | TREATMENT FOR DIABETES IN PATIENTS INAPPROPRIATE FOR METFORMIN THERAPY |
| ***A 61K 31/4985*** | EP 2326326* | PURIN DERIVATIVES FOR USE IN THE TREATMENT OF FAB-RELATED DISEASES |
| ***A 61K 31/501*** | EP 2136808* | PIPERAZINE-SUBSTITUTED PYRIDAZINONE DERIVATIVES USEFUL AS GLUCAN SYNTHASE INHIBITORS |
| ***A 61K 31/5025*** | EP 2069354* | Aza-benzofuranyl compounds and methods of use |
| ***A 61K 31/5025*** | EP 2081937* | TRIAZOLOPYRIDAZINE PROTEIN KINASE MODULATORS |
| ***A 61K 31/5025*** | EP 2323650* | TREATMENT FOR DIABETES IN PATIENTS INAPPROPRIATE FOR METFORMIN THERAPY |
| ***A 61K 31/5025*** | EP 2331546* | 2-ALKYL-6-CYCLOAMINO-3-(PYRIDIN-4-YL)IMIDAZO[1,2-IB]-PYRIDAZINE DERIVATIVES, PREPARATION THEREOF, AND THERAPEUTIC APPLICATION THEREOF |
| ***A 61K 31/5025*** | EP 2334674* | PYRIDAZINO- PYRIDINONE COMPOUNDS FOR THE TREATMENT OF PROTEIN KINASE MEDIATED DISEASES. |
| ***A 61K 31/505*** | EP 2061474* | SOLID CITRATE AND TARTRATE SALTS OF DPP-IV INHIBITORS |
| ***A 61K 31/506*** | EP 2323650* | TREATMENT FOR DIABETES IN PATIENTS INAPPROPRIATE FOR METFORMIN THERAPY |
| ***A 61K 31/506*** | EP 2324012* | NEW COMPOUNDS |
| ***A 61K 31/506*** | EP 2331523* | PYRIDINE AND PYRIMIDINE BASED COMPOUNDS AS WNT SIGNALING PATHWAY INHIBITORS FOR THE TREATMENT OF CANCER |
| ***A 61K 31/506*** | EP 2341906* | HEMATOPOIETIC PROTECTION AGAINST IONIZING RADIATION USING SELECTIVE CYCLIN-DEPENDENT KINASE 4/6 INHIBITORS |
| ***A 61K 31/513*** | EP 2323650* | TREATMENT FOR DIABETES IN PATIENTS INAPPROPRIATE FOR METFORMIN THERAPY |
| ***A 61K 31/513*** | EP 2331091* | PHARMACEUTICAL COMBINATION OF 1-(2-TETRAHYDROFURYL)-5-FLUOROURACIL AND CAFFEIC ACID PHENETHYL ESTER FOR ORAL TREATING OF TUMORS |
| ***A 61K 31/517*** | EP 2094672* | ARYLSULFONAMIDE COMPOUNDS |
| ***A 61K 31/517*** | EP 2125777* | SPIRO SUBSTITUTED COMPOUNDS AS ANGIOGENESIS INHIBITORS |
| ***A 61K 31/517*** | EP 2326312* | PALIPERIDONE COMPOSITION COMPRISING SOLID MATRIX PARTICLES |
| ***A 61K 31/517*** | EP 2331137* | NEW COMBINATION OF ACTIVE INGREDIENTS CONTAINING AN ALPHA-1ANTAGONIST AND A PDE 4 INHIBITOR |
| ***A 61K 31/519*** | EP 2069354* | Aza-benzofuranyl compounds and methods of use |
| ***A 61K 31/519*** | EP 2107906* | NOVEL THERAPEUTIC USE FOR TREATING LEUKAEMIA |
| ***A 61K 31/519*** | EP 2107907* | Combination of pemirolast and ramatroban for use in the treatment of inflammatory disorders |
| ***A 61K 31/519*** | EP 2324024* | DIAZACARBAZOLES AND METHODS OF USE |
| ***A 61K 31/519*** | EP 2324028* | THERAPEUTIC AGENTS 414 |
| ***A 61K 31/519*** | EP 2331547* | PYRROLOPYRIMIDINE COMPOUNDS AS CDK INHIBITORS |
| ***A 61K 31/519*** | EP 2334684* | PYRAZOLOPYRIMIDINES AND THEIR USE FOR THE TREATMENT OF CNS DISORDERS |
| ***A 61K 31/519*** | EP 2341906* | HEMATOPOIETIC PROTECTION AGAINST IONIZING RADIATION USING SELECTIVE CYCLIN-DEPENDENT KINASE 4/6 INHIBITORS |
| ***A 61K 31/519*** | EP 2341911* | HEMATOPOIETIC PROTECTION AGAINST CHEMOTHERAPEUTIC COMPOUNDS USING SELECTIVE CYCLIN-DEPENDENT KINASE 4/6 INHIBITORS |
| ***A 61K 31/522*** | EP 2323650* | TREATMENT FOR DIABETES IN PATIENTS INAPPROPRIATE FOR METFORMIN THERAPY |
| ***A 61K 31/522*** | EP 2324025* | PURINE DERIVATIVES FOR USE IN THE TREATMENT OF ALLERGIC, INFLAMMATORY AND INFECTIOUS |

| (51) | Broj objave evropske prijave patenta | (51) |
|---|---|---|
| | | DISEASES |
| ***A 61K 31/522*** | EP 2324026* | PURINE DERIVATIVES FOR USE IN THE TREATMENT OF ALLERGIC, INFLAMMATORY AND INFECTIOUS DISEASES |
| ***A 61K 31/522*** | EP 2326326* | PURIN DERIVATIVES FOR USE IN THE TREATMENT OF FAB-RELATED DISEASES |
| ***A 61K 31/522*** | EP 2331065* | MODIFIED RELEASE EMULSIONS FOR APPLICATION TO SKIN OR VAGINAL MUCOSA |
| ***A 61K 31/53*** | EP 2081937* | TRIAZOLOPYRIDAZINE PROTEIN KINASE MODULATORS |
| ***A 61K 31/53*** | EP 2326326* | PURIN DERIVATIVES FOR USE IN THE TREATMENT OF FAB-RELATED DISEASES |
| ***A 61K 31/535*** | EP 2328877* | 1,4-BENZOXAZINE COMPOUNDS AND DERIVATIVES THEREOF AS THERAPEUTIC DRUGS FOR THE TREATMENT OF NEURODEGENERATIVE CONDITIONS |
| ***A 61K 31/5355*** | EP 2324017* | INHIBITORS OF 11beta-HYDROXYSTEROID DEHYDROGENASE 1 |
| ***A 61K 31/5355*** | EP 2324018* | CYCLIC INHIBITORS OF 11 BETA-HYDROXYSTEROID DEHYDROGENASE 1 |
| ***A 61K 31/5365*** | EP 2341053 | CEPHALOSPORIN HAVING CATECHOL GROUP |
| ***A 61K 31/5375*** | EP 2329824 | NOVEL PHARMACEUTICAL COMPOSITION FOR TREATMENT OF NOCICEPTIVE PAIN |
| ***A 61K 31/5377*** | EP 2331523* | PYRIDINE AND PYRIMIDINE BASED COMPOUNDS AS WNT SIGNALING PATHWAY INHIBITORS FOR THE TREATMENT OF CANCER |
| ***A 61K 31/5415*** | EP 2323642* | USE OF ENHANCERS, POSSIBLY ASSOCIATED TO RIBOFLAVIN, AS WELL AS CORRESPONDING OPHTHALMIC COMPOSITIONS FOR CORNEAL CROSS-LINKING IN THE TREATMENT OF THE KERATOCONUS OR OF OTHER CORNEAL ECTASIC DISORDERS |
| ***A 61K 31/5415*** | EP 2334302* | DOSAGE FORMS FOR WEAKLY IONIZABLE COMPOUNDS |
| ***A 61K 31/542*** | EP 2332943 | NOVEL FUSED AMINODIHYDROTHIAZINE DERIVATIVE |
| ***A 61K 31/546*** | EP 2341053 | CEPHALOSPORIN HAVING CATECHOL GROUP |
| ***A 61K 31/55*** | EP 2086981* | COMPOUNDS FOR INHIBITING MITOTIC PROGRESSION |
| ***A 61K 31/55*** | EP 2253614 | Inhibitors of IAP |
| ***A 61K 31/55*** | EP 2326625* | BENZAZEPINE DERIVATIVES AND THEIR USE AS HSTAMINE H3 ANTAGONISTS |
| ***A 61K 31/55*** | EP 2341053 | CEPHALOSPORIN HAVING CATECHOL GROUP |
| ***A 61K 31/56*** | EP 2323642* | USE OF ENHANCERS, POSSIBLY ASSOCIATED TO RIBOFLAVIN, AS WELL AS CORRESPONDING OPHTHALMIC COMPOSITIONS FOR CORNEAL CROSS-LINKING IN THE TREATMENT OF THE KERATOCONUS OR OF OTHER CORNEAL ECTASIC DISORDERS |
| ***A 61K 31/565*** | EP 2331067* | PROGESTIN-CONTAINING DRUG DELIVERY SYSTEM |
| ***A 61K 31/569*** | EP 2331065* | MODIFIED RELEASE EMULSIONS FOR APPLICATION TO SKIN OR VAGINAL MUCOSA |
| ***A 61K 31/60*** | EP 2323642* | USE OF ENHANCERS, POSSIBLY ASSOCIATED TO RIBOFLAVIN, AS WELL AS CORRESPONDING OPHTHALMIC COMPOSITIONS FOR CORNEAL CROSS-LINKING IN THE TREATMENT OF THE KERATOCONUS OR OF OTHER CORNEAL ECTASIC DISORDERS |
| ***A 61K 31/661*** | EP 2058317 | AMINOPHOSPHORIC ACID ESTER DERIVATIVE AND S1P RECEPTOR MODULATOR CONTAINING THE SAME AS ACTIVE INGREDIENT |
| ***A 61K 31/675*** | EP 2256124 | Phospho-indoles as HIV inhibitors |
| ***A 61K 31/69*** | EP 2061474* | SOLID CITRATE AND TARTRATE SALTS OF DPP-IV INHIBITORS |
| ***A 61K 31/704*** | EP 2107906* | NOVEL THERAPEUTIC USE FOR TREATING LEUKAEMIA |
| ***A 61K 31/7068*** | EP 2107906* | NOVEL THERAPEUTIC USE FOR TREATING LEUKAEMIA |
| ***A 61K 31/7088*** | EP 2256203 | IL-23 and its receptor; related reagents and methods |
| ***A 61K 31/728*** | EP 2341895* | HYALURONIC ACID CRYOGEL - COMPOSITIONS, USES, PROCESSES FOR MANUFACTURING |
| ***A 61K 31/765*** | EP 2334305* | BIOADHESIVE CONSTRUCTS |

| (51) | Broj objave evropske prijave patenta | (51) |
|---|---|---|
| ***A 61K 33/00*** | EP 2323485* | ANTI-ALLERGEN COMBINATIONS OF CALCIUM AND LANTHANUM SALTS |
| ***A 61K 33/06*** | EP 2323672* | COMPOSITIONS FOR THE PROPHYLAXIS AND TREATMENT OF DERMATOLOGICAL/MUCOSAL DISEASES, AND USES THEREOF |
| ***A 61K 33/12*** | EP 2323672* | COMPOSITIONS FOR THE PROPHYLAXIS AND TREATMENT OF DERMATOLOGICAL/MUCOSAL DISEASES, AND USES THEREOF |
| ***A 61K 35/12*** | EP 2076279* | NATIVE (TELOPEPTIDE) PLACENTAL COLLAGEN COMPOSITIONS |
| ***A 61K 35/12*** | EP 2341906* | HEMATOPOIETIC PROTECTION AGAINST IONIZING RADIATION USING SELECTIVE CYCLIN-DEPENDENT KINASE 4/6 INHIBITORS |
| ***A 61K 35/14*** | EP 2340026* | A DEPROTEINISED CALF BLOOD PREPARATION FOR USE IN PREVENTION OR TREATMENT OF DIABETIC PERIPHERAL POLYNEUROPATHY |
| ***A 61K 36/38*** | EP 2334313* | HOMEOPATHIC THERAPEUTIC METHOD |
| ***A 61K 36/534*** | EP 2334313* | HOMEOPATHIC THERAPEUTIC METHOD |
| ***A 61K 38/00*** | EP 2323678* | GLUCOSE-DEPENDENT INSULINOTROPIC POLYPEPTIDE ANALOGUES |
| ***A 61K 38/00*** | EP 2328601* | LINACLOTIDE-CONTAINING FORMULATIONS FOR ORAL ADMINISTRATION |
| ***A 61K 38/00*** | EP 2331077* | STABLE FORLULATION COMPRISING THERAPEUTIC POLYPEPTIDES FOR ORAL ADMINISTRATION |
| ***A 61K 38/00*** | EP 2331569* | RECOMBINANTLY PRODUCED HUMAN FACTOR VIII AND IX |
| ***A 61K 38/00*** | EP 2334316* | PROCESS FOR THE SYNTHESIS OF (AIB8,35)HGLP-1(7-36)-NH2 |
| ***A 61K 38/00*** | EP 2334695* | THERAPEUTIC RIBONUCLEASES |
| ***A 61K 38/00*** | EP 2341898* | STABLE SOLID FORMULATIONS OF GC-C RECEPTOR AGONIST POLYPEPTIDES SUITABLE FOR ORAL ADMINISTRATION |
| ***A 61K 38/08*** | EP 2331118* | COMPOSITION OF TUMOR-ASSOCIATED PEPTIDES AND RELATED ANTI-CANCER VACCINE FOR THE TREATMENT OF GLIOBLASTOMA (GBM) AND OTHER CANCERS |
| ***A 61K 38/08*** | EP 2334326* | MIMOTOPES OF ALPHA-SYNUCLEIN AND VACCINES THEREOF FOR THE TREATMENT OF NEURODEGENERATIVE DISORDERS |
| ***A 61K 38/08*** | EP 2341927* | NOVEL IMMUNOTHERAPY AGAINST SEVERAL TUMORS INCLUDING NEURONAL AND BRAIN TUMORS |
| ***A 61K 38/09*** | EP 2335736 | PHARMACEUTICAL COMPOSITION UTILISING COMBINATIONS OF VARIANTS OF THE GONADOTROPIN-LIBERATING HORMONE (GNRH) AS IMMUNOGEN |
| ***A 61K 38/10*** | EP 2331564* | METHODS OF TREATING INFLAMMATION |
| ***A 61K 38/16*** | EP 2125869* | SUBSTANCE P AND ANALOGS THEREOF AS AN IMMUNOGENIC COMPOSITION ADJUVANT |
| ***A 61K 38/16*** | EP 2331118* | COMPOSITION OF TUMOR-ASSOCIATED PEPTIDES AND RELATED ANTI-CANCER VACCINE FOR THE TREATMENT OF GLIOBLASTOMA (GBM) AND OTHER CANCERS |
| ***A 61K 38/16*** | EP 2331564* | METHODS OF TREATING INFLAMMATION |
| ***A 61K 38/16*** | EP 2341927* | NOVEL IMMUNOTHERAPY AGAINST SEVERAL TUMORS INCLUDING NEURONAL AND BRAIN TUMORS |
| ***A 61K 38/18*** | EP 2323626* | PARENTERAL COMPOSITION COMPRISING MICROSPHERES WITH A DIAMETER BETWEEN 10 AND 20 MICRONS |
| ***A 61K 38/18*** | EP 2323687* | METHOD OF UPREGULATING SORLA FOR THE TREATMENT OF ALZHEIMER'S DISEASE |
| ***A 61K 38/18*** | EP 2334319* | METHOD FOR REDUCING SCARRING DURING WOUND HEALING USING ANTISENSE COMPOUNDS DIRECTED TO CTGF |

| (51) | Broj objave evropske prijave patenta | (51) |
|---|---|---|
| ***A 61K 38/20*** | EP 2059253* | MODULATION OF REGULATORY T CELLS BY HUMAN IL-18 |
| ***A 61K 38/20*** | EP 2256203 | IL-23 and its receptor; related reagents and methods |
| ***A 61K 38/37*** | EP 2337580* | NEW PROTECTING COMPOSITIONS FOR RECOMBINANTLY PRODUCED FACTOR VIII |
| ***A 61K 38/39*** | EP 2076279* | NATIVE (TELOPEPTIDE) PLACENTAL COLLAGEN COMPOSITIONS |
| ***A 61K 38/40*** | EP 2251029 | Lactoferrin and gut neuronal health in adults and/or elderly |
| ***A 61K 38/40*** | EP 2251030 | Lactoferrin and brain health and development in infants |
| ***A 61K 38/43*** | EP 2343370 | A THROBIN-LIKE ENZYME OF AGKISTRODON ACUTUS |
| ***A 61K 39/00*** | EP 2138509 | Tumor-associated peptide binding promiscuously to human leukocyte antigen (HLA) class II molecules |
| ***A 61K 39/00*** | EP 2251034 | Chimeric Newcastle Disease viruses presenting non-native surface proteins and uses thereof |
| ***A 61K 39/00*** | EP 2251418 | Mature dendritic cell compositions and methods for culturing same |
| ***A 61K 39/00*** | EP 2256203 | IL-23 and its receptor; related reagents and methods |
| ***A 61K 39/00*** | EP 2326345* | HUMAN NOTCH3 BASED FUSION PROTEINS AS DECOY INHIBITORS OF NOTCH3 SIGNALING |
| ***A 61K 39/00*** | EP 2331118* | COMPOSITION OF TUMOR-ASSOCIATED PEPTIDES AND RELATED ANTI-CANCER VACCINE FOR THE TREATMENT OF GLIOBLASTOMA (GBM) AND OTHER CANCERS |
| ***A 61K 39/00*** | EP 2334326* | MIMOTOPES OF ALPHA-SYNUCLEIN AND VACCINES THEREOF FOR THE TREATMENT OF NEURODEGENERATIVE DISORDERS |
| ***A 61K 39/00*** | EP 2335736 | PHARMACEUTICAL COMPOSITION UTILISING COMBINATIONS OF VARIANTS OF THE GONADOTROPIN-LIBERATING HORMONE (GNRH) AS IMMUNOGEN |
| ***A 61K 39/00*** | EP 2338907 | Novel immunogenic epitopes for immunotherapy |
| ***A 61K 39/00*** | EP 2341927* | NOVEL IMMUNOTHERAPY AGAINST SEVERAL TUMORS INCLUDING NEURONAL AND BRAIN TUMORS |
| ***A 61K 39/00*** | EP 2342220* | METHODS AND SYSTEMS FOR PREDICTING MISFOLDED PROTEIN EPITOPES |
| ***A 61K 39/095*** | EP 2331121* | VACCINE COMPRISING PROTEIN NMBO964 FROM MEISSERIA MENINGITIDIS |
| ***A 61K 39/145*** | EP 2251034 | Chimeric Newcastle Disease viruses presenting non-native surface proteins and uses thereof |
| ***A 61K 39/15*** | EP 2251034 | Chimeric Newcastle Disease viruses presenting non-native surface proteins and uses thereof |
| ***A 61K 39/155*** | EP 2324062* | CHIMERIC RESPIRATORY SYNCYTIAL VIRUS POLYPEPTIDE ANTIGENS |
| ***A 61K 39/17*** | EP 2251034 | Chimeric Newcastle Disease viruses presenting non-native surface proteins and uses thereof |
| ***A 61K 39/385*** | EP 2324062* | CHIMERIC RESPIRATORY SYNCYTIAL VIRUS POLYPEPTIDE ANTIGENS |
| ***A 61K 39/385*** | EP 2328613* | VACCINE |
| ***A 61K 39/39*** | EP 2331126* | IMMUNOLOGICAL COMPOSITION |
| ***A 61K 39/395*** | EP 2081553* | STABLE ANTIBODY FORMULATIONS |
| ***A 61K 39/395*** | EP 2104513* | OVR110 ANTIBODY COMPOSITIONS AND METHODS OF USE |
| ***A 61K 39/395*** | EP 2238986 | Sp35 antibodies and uses thereof |
| ***A 61K 39/395*** | EP 2241577 | Anti-CD37 antibodies |
| ***A 61K 39/395*** | EP 2328615* | ENGINEERED ANTI-IL-13 ANTIBODIES, COMPOSITIONS, METHODS AND USES |
| ***A 61K 39/395*** | EP 2328616* | COMPOSITIONS AND METHODS FOR ANTIBODIES TARGETING COMPLEMENT PROTEIN C5 |
| ***A 61K 39/395*** | EP 2328931* | ANTI-HEPCIDIN-25 SELECTIVE ANTIBODIES AND USES THEREOF |
| ***A 61K 39/395*** | EP 2330193 | IMPROVED ANTIBODY MOLECULE |
| ***A 61K 39/395*** | EP 2331136* | FRIZZLED-BINDING AGENTS AND USES THEREOF |
| ***A 61K 39/395*** | EP 2331573* | HEPATITIS C ANTIBODIES AND USES THEREOF |
| ***A 61K 39/395*** | EP 2338902 | Klebsiella antigens |

| (51) | Broj objave evropske prijave patenta | (51) |
|---|---|---|
| ***A 61K 39/395*** | EP 2341933* | LIPIDATED IMIDAZOQUINOLINE DERIVATIVES |
| ***A 61K 39/395*** | EP 2341934* | METHODS TO REDUCE B-HELPER T CELLS TO TREAT AUTOIMMUNE DISEASES |
| ***A 61K 39/395*** | EP 2342220* | METHODS AND SYSTEMS FOR PREDICTING MISFOLDED PROTEIN EPITOPES |
| ***A 61K 39/395*** | EP 2342228* | PD-1 SPECIFIC ANTIBODIES AND USES THEREOF |
| ***A 61K 45/06*** | EP 2107906* | NOVEL THERAPEUTIC USE FOR TREATING LEUKAEMIA |
| ***A 61K 45/06*** | EP 2324853 | Lixisenatide as add-on to metformin in the treatment of diabetes type 2 |
| ***A 61K 45/06*** | EP 2329848 | Lixisenatide as add-on therapy to insulin glargine and metformin for treating type 2 diabetes |
| ***A 61K 45/06*** | EP 2331137* | NEW COMBINATION OF ACTIVE INGREDIENTS CONTAINING AN ALPHA-1ANTAGONIST AND A PDE 4 INHIBITOR |
| ***A 61K 45/06*** | EP 2334299* | PHARMACEUTICAL COMPOSITION COMPRISING GABOXADOL AND AN INHIBITOR OF PATL OR OAT |
| ***A 61K 45/06*** | EP 2337583* | COMBINATION OF HCV NS3 PROTEASE INHIBITOR WITH INTERFERON AND RIBAVIRIN |
| ***A 61K 45/06*** | EP 2340042* | METHODS AND COMPOSITIONS FOR THE TREATMENT OF CANCER |
| ***A 61K 47/02*** | EP 2081553* | STABLE ANTIBODY FORMULATIONS |
| ***A 61K 47/02*** | EP 2341898* | STABLE SOLID FORMULATIONS OF GC-C RECEPTOR AGONIST POLYPEPTIDES SUITABLE FOR ORAL ADMINISTRATION |
| ***A 61K 47/08*** | EP 2324826 | HYDROPHILIC AMINO ACID-CONTAINING PREPARATION HAVING IMPROVED TASTE |
| ***A 61K 47/10*** | EP 2086504* | DICLOFENAC GEL |
| ***A 61K 47/12*** | EP 2324826 | HYDROPHILIC AMINO ACID-CONTAINING PREPARATION HAVING IMPROVED TASTE |
| ***A 61K 47/12*** | EP 2332535 | SOLID PHARMACEUTICAL COMPOSITION |
| ***A 61K 47/18*** | EP 2341898* | STABLE SOLID FORMULATIONS OF GC-C RECEPTOR AGONIST POLYPEPTIDES SUITABLE FOR ORAL ADMINISTRATION |
| ***A 61K 47/20*** | EP 2326306* | LIQUID FORMULATIONS OF BENDAMUSTINE |
| ***A 61K 47/22*** | EP 2332535 | SOLID PHARMACEUTICAL COMPOSITION |
| ***A 61K 47/26*** | EP 2081553* | STABLE ANTIBODY FORMULATIONS |
| ***A 61K 47/32*** | EP 2086504* | DICLOFENAC GEL |
| ***A 61K 47/32*** | EP 2328618* | PHARMACEUTICAL COMPOSITION OF N-[2,4-BIS(1,1-DIMETHYLETHYL)-5-HYDROXYPHENYL]-1,4-DIHYDRO-4- OXOQUINOLINE-3-CARBOXAMIDE AND ADMINISTRATION THEREOF |
| ***A 61K 47/34*** | EP 2326304* | METHODS FOR ENHANCING THE STABILITY OF POLYORTHOESTERS AND THEIR FORMULATIONS |
| ***A 61K 47/34*** | EP 2340016* | TOPICAL FORMULATION OF 3-(2,2,2-TRIMETHYLHYDRAZINIUM) PROPIONATE DIHYDRATE |
| ***A 61K 47/36*** | EP 2086504* | DICLOFENAC GEL |
| ***A 61K 47/36*** | EP 2324826 | HYDROPHILIC AMINO ACID-CONTAINING PREPARATION HAVING IMPROVED TASTE |
| ***A 61K 47/36*** | EP 2331629* | STARCH-BASED MICROPARTICLES FOR THE RELEASE OF AGENTS DISPOSED THEREIN |
| ***A 61K 47/38*** | EP 2086504* | DICLOFENAC GEL |
| ***A 61K 47/38*** | EP 2324826 | HYDROPHILIC AMINO ACID-CONTAINING PREPARATION HAVING IMPROVED TASTE |
| ***A 61K 47/48*** | EP 2323695* | COMPLEXES OF SMALL-INTERFERING NUCLEIC ACIDS |
| ***A 61K 47/48*** | EP 2326351* | CONJUGATES OF SMALL-INTERFERING NUCLEIC ACIDS |
| ***A 61K 47/48*** | EP 2331139* | POLYMERIC ALPHA-HYDROXY ALDEHYDE AND KETONE REAGENTS AND CONJUGATION METHOD |
| ***A 61K 47/48*** | EP 2331140* | MULTI-ARM POLYMERIC ALKANOATE CONJUGATES |
| ***A 61K 47/48*** | EP 2334333* | POLYMER CONJUGATES OF V681-LIKE PEPTIDES |
| ***A 61K 47/48*** | EP 2334334* | POLYMER CONJUGATES OF NESIRITIDE PEPTIDES |
| ***A 61K 47/48*** | EP 2334335* | POLYMER CONJUGATES OF CD-NP PEPTIDES |
| ***A 61K 47/48*** | EP 2334336* | POLYMER CONJUGATES OF OSTEOCALCIN PEPTIDES |

| (51) | Broj objave evropske prijave patenta | (51) |
|---|---|---|
| ***A 61K 47/48*** | EP 2334337* | POLYMER CONJUGATES OF OPIOID GROWTH FACTOR PEPTIDES |
| ***A 61K 47/48*** | EP 2334338* | POLYMER CONJUGATES OF C-PEPTIDES |
| ***A 61K 47/48*** | EP 2335736 | PHARMACEUTICAL COMPOSITION UTILISING COMBINATIONS OF VARIANTS OF THE GONADOTROPIN-LIBERATING HORMONE (GNRH) AS IMMUNOGEN |
| ***A 61K 47/48*** | EP 2337585* | POLYMER CONJUGATES OF GLP-2-LIKE PEPTIDES |
| ***A 61K 47/48*** | EP 2340044* | PEGYLATED OPIOIDS WITH LOW POTENTIAL FOR ABUSE |
| ***A 61K 47/48*** | EP 2340045* | POLYMER CONJUGATES OF PROTEGRIN PEPTIDES |
| ***A 61K 47/48*** | EP 2340046* | POLYMER CONJUGATES OF ZICONOTIDE PEPTIDES |
| ***A 61K 47/48*** | EP 2340047* | POLYMER CONJUGATES OF KISS1 PEPTIDES |
| ***A 61K 47/48*** | EP 2340048* | POLYMER CONJUGATES OF BIPHALIN PEPTIDES |
| ***A 61K 47/48*** | EP 2340050* | POLYMER CONJUGATES OF AOD-LIKE PEPTIDES |
| ***A 61K 47/48*** | EP 2341942* | POLYMER CONJUGATES OF THERAPEUTIC PEPTIDES |
| ***A 61K 48/00*** | EP 2086591* | EFFICIENT NUCLEAR DELIVERY OF ANTISENSE OLIGONUCLEOTIDES |
| ***A 61K 48/00*** | EP 2256203 | IL-23 and its receptor; related reagents and methods |
| ***A 61K 48/00*** | EP 2331141* | ANTISENSE OLIGONUCLEOTIDES DIRECTED AGAINST CONNECTIVE TISSUE GROWTH FACTOR AND USES THEREOF |
| ***A 61K 51/04*** | EP 2328891* | NEW BENZOFURANS SUITABLE AS PRECURSORS TO COMPOUNDS THAT ARE USEFUL FOR IMAGING AMYLOID DEPOSITS |
| ***A 61L 2/10*** | EP 2334340* | ASSEMBLY AND METHOD FOR DISINFECTING LUMENS OF MEDICAL DEVICES |
| ***A 61M 1/36*** | EP 2331568* | TREATING INFLAMMATORY CONDITIONS |
| ***A 61M 5/00*** | EP 2326371* | SYSTEMS FOR ADMINISTERING MEDICATION FOR RHEUMATOID ARTHRITIS PATIENTS |
| ***A 61M 5/31*** | EP 2326371* | SYSTEMS FOR ADMINISTERING MEDICATION FOR RHEUMATOID ARTHRITIS PATIENTS |
| ***A 61M 5/32*** | EP 2326371* | SYSTEMS FOR ADMINISTERING MEDICATION FOR RHEUMATOID ARTHRITIS PATIENTS |
| ***A 61M 5/50*** | EP 2341963* | CAP ASSEMBLY AND PRODUCTION METHOD |
| ***A 61M 11/06*** | EP 2326373* | METHODS FOR AMELIORATING PAIN AND DEVICES FOR DELIVERING A MEDICAMENT |
| ***A 61M 15/08*** | EP 2326373* | METHODS FOR AMELIORATING PAIN AND DEVICES FOR DELIVERING A MEDICAMENT |
| ***A 61M 25/00*** | EP 2341972* | CATHETER STRUCTURE |
| ***A 61M 27/00*** | EP 2341972* | CATHETER STRUCTURE |
| ***A 61M 29/00*** | EP 2334367* | METHOD AND APPARATUS FOR ACCESSING THE WALL OF A VASCULAR STRUCTURE OR OTHER BODY LUMEN WHILE SIMULTANEOUSLY PROVIDING ZONE ISOLATION AND FLUID BYPASS CAPABILITY |
| ***A 61M 31/00*** | EP 2326373* | METHODS FOR AMELIORATING PAIN AND DEVICES FOR DELIVERING A MEDICAMENT |
| ***A 61M 39/20*** | EP 2341963* | CAP ASSEMBLY AND PRODUCTION METHOD |
| ***A 61N 1/30*** | EP 2331199* | IONTOPHORETIC DRUG DELIVERY PACKAGING |
| ***A 61N 1/30*** | EP 2331200* | SACRIFICIAL ELECTRODE DESIGN AND DELIVERY SPECIES SUITABLE FOR PROLONGED IONTOPHORESIS APPLICATION PERIODS |
| ***A 61N 7/02*** | EP 2327450 | A cover, a treatment device and a method of use of such a device |
| ***A 61P 1/00*** | EP 2137152* | NOVEL BENZAMIDE DERIVATIVES AND PROCESS FOR THE PREPARATION THEREOF |
| ***A 61P 1/00*** | EP 2137155* | QUINOLINE DERIVATIVES, PHARMACEUTICAL COMPOSITIONS COMPRISING THEM, AND THEIR USE IN TREATING CENTRAL NERVOUS SYSTEM AND PERIPHERAL DISEASES |
| ***A 61P 1/00*** | EP 2251029 | Lactoferrin and gut neuronal health in adults and/or elderly |
| ***A 61P 1/00*** | EP 2323970* | CYCLOHEXYL AMIDE DERIVATIVES AND THEIR USE AS CRF-1 RECEPTOR ANTAGONISTS |
| ***A 61P 1/00*** | EP 2324015* | THIOPHENE-2-CARBOXAMIDE DERIVATIVES, PREPARATION THEREOF AND THERAPEUTIC USE |

| (51) | Broj objave evropske prijave patenta | (51) |
|---|---|---|
| | | THEREOF |
| ***A 61P 1/00*** | EP 2332535 | SOLID PHARMACEUTICAL COMPOSITION |
| ***A 61P 1/00*** | EP 2342200* | COMPOUNDS WHICH SELECTIVELY MODULATE THE CB2 RECEPTOR |
| ***A 61P 1/02*** | EP 2332535 | SOLID PHARMACEUTICAL COMPOSITION |
| ***A 61P 1/04*** | EP 2058317 | AMINOPHOSPHORIC ACID ESTER DERIVATIVE AND S1P RECEPTOR MODULATOR CONTAINING THE SAME AS ACTIVE INGREDIENT |
| ***A 61P 1/04*** | EP 2330193 | IMPROVED ANTIBODY MOLECULE |
| ***A 61P 1/04*** | EP 2332535 | SOLID PHARMACEUTICAL COMPOSITION |
| ***A 61P 1/06*** | EP 2137152* | NOVEL BENZAMIDE DERIVATIVES AND PROCESS FOR THE PREPARATION THEREOF |
| ***A 61P 1/14*** | EP 2324826 | HYDROPHILIC AMINO ACID-CONTAINING PREPARATION HAVING IMPROVED TASTE |
| ***A 61P 1/14*** | EP 2332535 | SOLID PHARMACEUTICAL COMPOSITION |
| ***A 61P 1/16*** | EP 2058317 | AMINOPHOSPHORIC ACID ESTER DERIVATIVE AND S1P RECEPTOR MODULATOR CONTAINING THE SAME AS ACTIVE INGREDIENT |
| ***A 61P 1/16*** | EP 2330193 | IMPROVED ANTIBODY MOLECULE |
| ***A 61P 3/00*** | EP 2099791* | THIENYL-CONTAINING GLYCOPYRANOSYL DERIVATIVES AS ANTIDIABETICS |
| ***A 61P 3/00*** | EP 2324002* | PROCESSES FOR THE PREPARATION OF SGLT2 INHIBITORS |
| ***A 61P 3/00*** | EP 2324015* | THIOPHENE-2-CARBOXAMIDE DERIVATIVES, PREPARATION THEREOF AND THERAPEUTIC USE THEREOF |
| ***A 61P 3/00*** | EP 2324017* | INHIBITORS OF 11beta-HYDROXYSTEROID DEHYDROGENASE 1 |
| ***A 61P 3/00*** | EP 2328874* | COMPOUNDS, COMPOSITIONS AND METHODS OF USING SAME FOR MODULATING URIC ACID LEVELS |
| ***A 61P 3/00*** | EP 2331534* | BENZOXAZOLES, BENZTHIAZOLES AND RELATED ANALOGS AS SIRTUIN MODULATORS |
| ***A 61P 3/00*** | EP 2332535 | SOLID PHARMACEUTICAL COMPOSITION |
| ***A 61P 3/00*** | EP 2334684* | PYRAZOLOPYRIMIDINES AND THEIR USE FOR THE TREATMENT OF CNS DISORDERS |
| ***A 61P 3/00*** | EP 2342203* | PYRAZOLO PYRIDINE DERIVATIVES AS NADPH OXIDASE INHIBITORS |
| ***A 61P 3/02*** | EP 2324826 | HYDROPHILIC AMINO ACID-CONTAINING PREPARATION HAVING IMPROVED TASTE |
| ***A 61P 3/04*** | EP 2324028* | THERAPEUTIC AGENTS 414 |
| ***A 61P 3/04*** | EP 2332535 | SOLID PHARMACEUTICAL COMPOSITION |
| ***A 61P 3/06*** | EP 2332535 | SOLID PHARMACEUTICAL COMPOSITION |
| ***A 61P 3/10*** | EP 2058317 | AMINOPHOSPHORIC ACID ESTER DERIVATIVE AND S1P RECEPTOR MODULATOR CONTAINING THE SAME AS ACTIVE INGREDIENT |
| ***A 61P 3/10*** | EP 2323650* | TREATMENT FOR DIABETES IN PATIENTS INAPPROPRIATE FOR METFORMIN THERAPY |
| ***A 61P 3/10*** | EP 2324002* | PROCESSES FOR THE PREPARATION OF SGLT2 INHIBITORS |
| ***A 61P 3/10*** | EP 2324028* | THERAPEUTIC AGENTS 414 |
| ***A 61P 3/10*** | EP 2330193 | IMPROVED ANTIBODY MOLECULE |
| ***A 61P 3/10*** | EP 2331534* | BENZOXAZOLES, BENZTHIAZOLES AND RELATED ANALOGS AS SIRTUIN MODULATORS |
| ***A 61P 3/10*** | EP 2334687* | DIOXA-BICYCLO[3.2.1.]OCTANE-2,3,4-TRIOL DERIVATIVES |
| ***A 61P 3/10*** | EP 2340026* | A DEPROTEINISED CALF BLOOD PREPARATION FOR USE IN PREVENTION OR TREATMENT OF DIABETIC PERIPHERAL POLYNEUROPATHY |
| ***A 61P 3/10*** | EP 2342188* | CHROMENONE ANALOGS AS SIRTUIN MODULATORS |
| ***A 61P 3/12*** | EP 2332535 | SOLID PHARMACEUTICAL COMPOSITION |
| ***A 61P 5/50*** | EP 2332535 | SOLID PHARMACEUTICAL COMPOSITION |
| ***A 61P 7/00*** | EP 2332535 | SOLID PHARMACEUTICAL COMPOSITION |

| (51) | Broj objave evropske prijave patenta | (51) |
|---|---|---|
| ***A 61P 7/02*** | EP 2058317 | AMINOPHOSPHORIC ACID ESTER DERIVATIVE AND S1P RECEPTOR MODULATOR CONTAINING THE SAME AS ACTIVE INGREDIENT |
| ***A 61P 7/02*** | EP 2332535 | SOLID PHARMACEUTICAL COMPOSITION |
| ***A 61P 7/04*** | EP 2343370 | A THROBIN-LIKE ENZYME OF AGKISTRODON ACUTUS |
| ***A 61P 7/06*** | EP 2328931* | ANTI-HEPCIDIN-25 SELECTIVE ANTIBODIES AND USES THEREOF |
| ***A 61P 7/06*** | EP 2330193 | IMPROVED ANTIBODY MOLECULE |
| ***A 61P 7/06*** | EP 2342223* | MODIFIED ANIMAL ERYTHROPOIETIN POLYPEPTIDES AND THEIR USES |
| ***A 61P 7/10*** | EP 2332535 | SOLID PHARMACEUTICAL COMPOSITION |
| ***A 61P 9/00*** | EP 2107907* | Combination of pemirolast and ramatroban for use in the treatment of inflammatory disorders |
| ***A 61P 9/00*** | EP 2330193 | IMPROVED ANTIBODY MOLECULE |
| ***A 61P 9/00*** | EP 2332535 | SOLID PHARMACEUTICAL COMPOSITION |
| ***A 61P 9/00*** | EP 2342203* | PYRAZOLO PYRIDINE DERIVATIVES AS NADPH OXIDASE INHIBITORS |
| ***A 61P 9/02*** | EP 2328869* | HETEROARYL ANTAGONISTS OF PROSTAGLANDIN D2 RECEPTORS |
| ***A 61P 9/04*** | EP 2058317 | AMINOPHOSPHORIC ACID ESTER DERIVATIVE AND S1P RECEPTOR MODULATOR CONTAINING THE SAME AS ACTIVE INGREDIENT |
| ***A 61P 9/06*** | EP 2323647* | LONG-TERM TREATMENT OF SYMPTOMATIC HEART FAILURE |
| ***A 61P 9/06*** | EP 2332535 | SOLID PHARMACEUTICAL COMPOSITION |
| ***A 61P 9/06*** | EP 2337559* | METHOD OF TREATING ATRIAL FIBRILLATION |
| ***A 61P 9/08*** | EP 2332535 | SOLID PHARMACEUTICAL COMPOSITION |
| ***A 61P 9/10*** | EP 2058317 | AMINOPHOSPHORIC ACID ESTER DERIVATIVE AND S1P RECEPTOR MODULATOR CONTAINING THE SAME AS ACTIVE INGREDIENT |
| ***A 61P 9/10*** | EP 2326324* | USE OF DRONEDARONE FOR THE PREPARATION OF A MEDICAMENT FOR THE PREVENTION OF STROKE OR TRANSIENT ISCHEMIC ATTACK |
| ***A 61P 9/10*** | EP 2328879* | COMPOUNDS, COMPOSITIONS AND METHODS OF USING SAME FOR MODULATING URIC ACID LEVELS |
| ***A 61P 9/10*** | EP 2330193 | IMPROVED ANTIBODY MOLECULE |
| ***A 61P 9/10*** | EP 2332535 | SOLID PHARMACEUTICAL COMPOSITION |
| ***A 61P 9/12*** | EP 2334668* | PROCESS FOR PREPARING OLMESARTAN MEDOXOMIL INTERMEDIATE |
| ***A 61P 11/00*** | EP 2058317 | AMINOPHOSPHORIC ACID ESTER DERIVATIVE AND S1P RECEPTOR MODULATOR CONTAINING THE SAME AS ACTIVE INGREDIENT |
| ***A 61P 11/00*** | EP 2137155* | QUINOLINE DERIVATIVES, PHARMACEUTICAL COMPOSITIONS COMPRISING THEM, AND THEIR USE IN TREATING CENTRAL NERVOUS SYSTEM AND PERIPHERAL DISEASES |
| ***A 61P 11/00*** | EP 2324831 | Methods of administering pirfenidone therapy |
| ***A 61P 11/00*** | EP 2328869* | HETEROARYL ANTAGONISTS OF PROSTAGLANDIN D2 RECEPTORS |
| ***A 61P 11/00*** | EP 2330193 | IMPROVED ANTIBODY MOLECULE |
| ***A 61P 11/00*** | EP 2342203* | PYRAZOLO PYRIDINE DERIVATIVES AS NADPH OXIDASE INHIBITORS |
| ***A 61P 11/00*** | EP 2343070 | Pirfenidone treatment for patients with atypical liver function |
| ***A 61P 11/02*** | EP 2058317 | AMINOPHOSPHORIC ACID ESTER DERIVATIVE AND S1P RECEPTOR MODULATOR CONTAINING THE SAME AS ACTIVE INGREDIENT |
| ***A 61P 11/06*** | EP 2058317 | AMINOPHOSPHORIC ACID ESTER DERIVATIVE AND S1P RECEPTOR MODULATOR CONTAINING THE SAME AS ACTIVE INGREDIENT |
| ***A 61P 11/06*** | EP 2330193 | IMPROVED ANTIBODY MOLECULE |
| ***A 61P 13/00*** | EP 2328583* | NEW THERAPEUTIC USE OF DROTAVERINE |
| ***A 61P 13/00*** | EP 2328868* | NOVEL COMPOUNDS ACTIVE AS MUSCARINIC |

| (51) | Broj objave evropske prijave patenta | (51) |
|---|---|---|
| | | RECEPTOR ANTAGONISTS |
| ***A 61P 13/08*** | EP 2331137* | NEW COMBINATION OF ACTIVE INGREDIENTS CONTAINING AN ALPHA-1ANTAGONIST AND A PDE 4 INHIBITOR |
| ***A 61P 13/10*** | EP 2331137* | NEW COMBINATION OF ACTIVE INGREDIENTS CONTAINING AN ALPHA-1ANTAGONIST AND A PDE 4 INHIBITOR |
| ***A 61P 13/12*** | EP 2058317 | AMINOPHOSPHORIC ACID ESTER DERIVATIVE AND S1P RECEPTOR MODULATOR CONTAINING THE SAME AS ACTIVE INGREDIENT |
| ***A 61P 13/12*** | EP 2330193 | IMPROVED ANTIBODY MOLECULE |
| ***A 61P 15/00*** | EP 2137155* | QUINOLINE DERIVATIVES, PHARMACEUTICAL COMPOSITIONS COMPRISING THEM, AND THEIR USE IN TREATING CENTRAL NERVOUS SYSTEM AND PERIPHERAL DISEASES |
| ***A 61P 15/00*** | EP 2335736 | PHARMACEUTICAL COMPOSITION UTILISING COMBINATIONS OF VARIANTS OF THE GONADOTROPIN-LIBERATING HORMONE (GNRH) AS IMMUNOGEN |
| ***A 61P 15/02*** | EP 2331065* | MODIFIED RELEASE EMULSIONS FOR APPLICATION TO SKIN OR VAGINAL MUCOSA |
| ***A 61P 15/06*** | EP 2323646* | USE OF STEROID SULFATASE INHIBITORS FOR THE TREATMENT OF PRETERM LABOR |
| ***A 61P 15/08*** | EP 2330193 | IMPROVED ANTIBODY MOLECULE |
| ***A 61P 15/12*** | EP 2331065* | MODIFIED RELEASE EMULSIONS FOR APPLICATION TO SKIN OR VAGINAL MUCOSA |
| ***A 61P 17/00*** | EP 2058317 | AMINOPHOSPHORIC ACID ESTER DERIVATIVE AND S1P RECEPTOR MODULATOR CONTAINING THE SAME AS ACTIVE INGREDIENT |
| ***A 61P 17/00*** | EP 2323672* | COMPOSITIONS FOR THE PROPHYLAXIS AND TREATMENT OF DERMATOLOGICAL/MUCOSAL DISEASES, AND USES THEREOF |
| ***A 61P 17/00*** | EP 2330193 | IMPROVED ANTIBODY MOLECULE |
| ***A 61P 17/00*** | EP 2331065* | MODIFIED RELEASE EMULSIONS FOR APPLICATION TO SKIN OR VAGINAL MUCOSA |
| ***A 61P 17/00*** | EP 2334313* | HOMEOPATHIC THERAPEUTIC METHOD |
| ***A 61P 17/00*** | EP 2334674* | PYRIDAZINO- PYRIDINONE COMPOUNDS FOR THE TREATMENT OF PROTEIN KINASE MEDIATED DISEASES. |
| ***A 61P 17/00*** | EP 2340016* | TOPICAL FORMULATION OF 3-(2,2,2-TRIMETHYLHYDRAZINIUM) PROPIONATE DIHYDRATE |
| ***A 61P 17/00*** | EP 2341934* | METHODS TO REDUCE B-HELPER T CELLS TO TREAT AUTOIMMUNE DISEASES |
| ***A 61P 17/00*** | EP 2342203* | PYRAZOLO PYRIDINE DERIVATIVES AS NADPH OXIDASE INHIBITORS |
| ***A 61P 17/02*** | EP 2058317 | AMINOPHOSPHORIC ACID ESTER DERIVATIVE AND S1P RECEPTOR MODULATOR CONTAINING THE SAME AS ACTIVE INGREDIENT |
| ***A 61P 17/02*** | EP 2076279* | NATIVE (TELOPEPTIDE) PLACENTAL COLLAGEN COMPOSITIONS |
| ***A 61P 17/02*** | EP 2323639* | EMOLLIENT COMPOSITION |
| ***A 61P 17/02*** | EP 2326326* | PURIN DERIVATIVES FOR USE IN THE TREATMENT OF FAB-RELATED DISEASES |
| ***A 61P 17/06*** | EP 2323639* | EMOLLIENT COMPOSITION |
| ***A 61P 17/06*** | EP 2330193 | IMPROVED ANTIBODY MOLECULE |
| ***A 61P 17/14*** | EP 2324826 | HYDROPHILIC AMINO ACID-CONTAINING PREPARATION HAVING IMPROVED TASTE |
| ***A 61P 17/16*** | EP 2324826 | HYDROPHILIC AMINO ACID-CONTAINING PREPARATION HAVING IMPROVED TASTE |
| ***A 61P 19/00*** | EP 2324015* | THIOPHENE-2-CARBOXAMIDE DERIVATIVES, PREPARATION THEREOF AND THERAPEUTIC USE THEREOF |
| ***A 61P 19/00*** | EP 2331548* | PROTEASE INHIBITORS |
| ***A 61P 19/02*** | EP 2328879* | COMPOUNDS, COMPOSITIONS AND METHODS OF USING |

| (51) | Broj objave evropske prijave patenta | (51) |
|---|---|---|
| | | SAME FOR MODULATING URIC ACID LEVELS |
| ***A 61P 19/02*** | EP 2330193 | IMPROVED ANTIBODY MOLECULE |
| ***A 61P 19/02*** | EP 2341934* | METHODS TO REDUCE B-HELPER T CELLS TO TREAT AUTOIMMUNE DISEASES |
| ***A 61P 19/08*** | EP 2342203* | PYRAZOLO PYRIDINE DERIVATIVES AS NADPH OXIDASE INHIBITORS |
| ***A 61P 19/10*** | EP 2324017* | INHIBITORS OF 11beta-HYDROXYSTEROID DEHYDROGENASE 1 |
| ***A 61P 19/10*** | EP 2324018* | CYCLIC INHIBITORS OF 11 BETA-HYDROXYSTEROID DEHYDROGENASE 1 |
| ***A 61P 19/10*** | EP 2330193 | IMPROVED ANTIBODY MOLECULE |
| ***A 61P 21/00*** | EP 2324826 | HYDROPHILIC AMINO ACID-CONTAINING PREPARATION HAVING IMPROVED TASTE |
| ***A 61P 21/00*** | EP 2328877* | 1,4-BENZOXAZINE COMPOUNDS AND DERIVATIVES THEREOF AS THERAPEUTIC DRUGS FOR THE TREATMENT OF NEURODEGENERATIVE CONDITIONS |
| ***A 61P 21/00*** | EP 2330193 | IMPROVED ANTIBODY MOLECULE |
| ***A 61P 21/04*** | EP 2058317 | AMINOPHOSPHORIC ACID ESTER DERIVATIVE AND S1P RECEPTOR MODULATOR CONTAINING THE SAME AS ACTIVE INGREDIENT |
| ***A 61P 25/00*** | EP 2058317 | AMINOPHOSPHORIC ACID ESTER DERIVATIVE AND S1P RECEPTOR MODULATOR CONTAINING THE SAME AS ACTIVE INGREDIENT |
| ***A 61P 25/00*** | EP 2069346* | ACETAMIDE AND CARBOXAMIDE DERIVATIVES OF AZAADAMANTANE AND METHODS OF USE THEREOF |
| ***A 61P 25/00*** | EP 2120920* | OXYLIPINS FROM LONG CHAIN POLYUNSATURATED FATTY ACIDS AND METHODS OF MAKING AND USING THE SAME |
| ***A 61P 25/00*** | EP 2137155* | QUINOLINE DERIVATIVES, PHARMACEUTICAL COMPOSITIONS COMPRISING THEM, AND THEIR USE IN TREATING CENTRAL NERVOUS SYSTEM AND PERIPHERAL DISEASES |
| ***A 61P 25/00*** | EP 2186511 | Method of treating sleep disorders using eplivanserin |
| ***A 61P 25/00*** | EP 2238986 | Sp35 antibodies and uses thereof |
| ***A 61P 25/00*** | EP 2251324 | HETEROARYL-ALKYLCARBAMATE COMPOUNDS AND THEIR USE AS INHIBITORS OF THE FAAH ENZYME |
| ***A 61P 25/00*** | EP 2324015* | THIOPHENE-2-CARBOXAMIDE DERIVATIVES, PREPARATION THEREOF AND THERAPEUTIC USE THEREOF |
| ***A 61P 25/00*** | EP 2324017* | INHIBITORS OF 11beta-HYDROXYSTEROID DEHYDROGENASE 1 |
| ***A 61P 25/00*** | EP 2330193 | IMPROVED ANTIBODY MOLECULE |
| ***A 61P 25/00*** | EP 2331546* | 2-ALKYL-6-CYCLOAMINO-3-(PYRIDIN-4-YL)IMIDAZO[1,2-IB]-PYRIDAZINE DERIVATIVES, PREPARATION THEREOF, AND THERAPEUTIC APPLICATION THEREOF |
| ***A 61P 25/00*** | EP 2332943 | NOVEL FUSED AMINODIHYDROTHIAZINE DERIVATIVE |
| ***A 61P 25/00*** | EP 2334326* | MIMOTOPES OF ALPHA-SYNUCLEIN AND VACCINES THEREOF FOR THE TREATMENT OF NEURODEGENERATIVE DISORDERS |
| ***A 61P 25/00*** | EP 2334684* | PYRAZOLOPYRIMIDINES AND THEIR USE FOR THE TREATMENT OF CNS DISORDERS |
| ***A 61P 25/00*** | EP 2335701 | Heterocyclic aspartyl protease inhibitors |
| ***A 61P 25/00*** | EP 2343069 | Heterocyclic aspartyl protease inhibitors |
| ***A 61P 25/02*** | EP 2340026* | A DEPROTEINISED CALF BLOOD PREPARATION FOR USE IN PREVENTION OR TREATMENT OF DIABETIC PERIPHERAL POLYNEUROPATHY |
| ***A 61P 25/04*** | EP 2324013* | SUBSTITUTED-QUINOXALINE-TYPE BRIDGED-PIPERIDINE COMPOUNDS AND THE USES THEREOF |
| ***A 61P 25/04*** | EP 2326651* | BUPRENORPHINE ANALOGS |
| ***A 61P 25/04*** | EP 2329824 | NOVEL PHARMACEUTICAL COMPOSITION FOR TREATMENT OF NOCICEPTIVE PAIN |
| ***A 61P 25/04*** | EP 2331522* | TETRAHYDROPYRIDINYL AND DIHYDROPYRROLYL |

| (51) | Broj objave evropske prijave patenta | (51) |
|---|---|---|
| | | COMPOUNDS AND THE USE THEREOF |
| ***A 61P 25/04*** | EP 2340044* | PEGYLATED OPIOIDS WITH LOW POTENTIAL FOR ABUSE |
| ***A 61P 25/04*** | EP 2340046* | POLYMER CONJUGATES OF ZICONOTIDE PEPTIDES |
| ***A 61P 25/18*** | EP 2326625* | BENZAZEPINE DERIVATIVES AND THEIR USE AS HSTAMINE H3 ANTAGONISTS |
| ***A 61P 25/18*** | EP 2326635* | NOVEL SUBSTITUTED SULFAMIDE DERIVATIVES |
| ***A 61P 25/18*** | EP 2342182* | ISOQUINOLINONE DERIVATIVES AS NK3 ANTAGONISTS |
| ***A 61P 25/24*** | EP 2326635* | NOVEL SUBSTITUTED SULFAMIDE DERIVATIVES |
| ***A 61P 25/28*** | EP 2251030 | Lactoferrin and brain health and development in infants |
| ***A 61P 25/28*** | EP 2323687* | METHOD OF UPREGULATING SORLA FOR THE TREATMENT OF ALZHEIMER'S DISEASE |
| ***A 61P 25/28*** | EP 2328891* | NEW BENZOFURANS SUITABLE AS PRECURSORS TO COMPOUNDS THAT ARE USEFUL FOR IMAGING AMYLOID DEPOSITS |
| ***A 61P 25/28*** | EP 2328903* | SPIRO-TETRACYCLIC RING COMPOUNDS AS BETASECRETASE MODULATORS AND METHODS OF USE |
| ***A 61P 25/28*** | EP 2331522* | TETRAHYDROPYRIDINYL AND DIHYDROPYRROLYL COMPOUNDS AND THE USE THEREOF |
| ***A 61P 25/28*** | EP 2332943 | NOVEL FUSED AMINODIHYDROTHIAZINE DERIVATIVE |
| ***A 61P 25/28*** | EP 2342203* | PYRAZOLO PYRIDINE DERIVATIVES AS NADPH OXIDASE INHIBITORS |
| ***A 61P 25/36*** | EP 2340044* | PEGYLATED OPIOIDS WITH LOW POTENTIAL FOR ABUSE |
| ***A 61P 27/00*** | EP 2323657* | OPHTHALMIC PHARMACEUTICAL COMPOSITIONS COMPRISING SORAFENIB FOR THE TREATMENT OF NEOANGIOGENIC PATHOLOGIES OF THE EYE |
| ***A 61P 27/02*** | EP 2323642* | USE OF ENHANCERS, POSSIBLY ASSOCIATED TO RIBOFLAVIN, AS WELL AS CORRESPONDING OPHTHALMIC COMPOSITIONS FOR CORNEAL CROSS-LINKING IN THE TREATMENT OF THE KERATOCONUS OR OF OTHER CORNEAL ECTASIC DISORDERS |
| ***A 61P 27/02*** | EP 2330193 | IMPROVED ANTIBODY MOLECULE |
| ***A 61P 27/02*** | EP 2340242* | COMPOUNDS FOR TREATING OPHTHALMIC DISEASES AND DISORDERS |
| ***A 61P 27/02*** | EP 2342203* | PYRAZOLO PYRIDINE DERIVATIVES AS NADPH OXIDASE INHIBITORS |
| ***A 61P 27/06*** | EP 2323657* | OPHTHALMIC PHARMACEUTICAL COMPOSITIONS COMPRISING SORAFENIB FOR THE TREATMENT OF NEOANGIOGENIC PATHOLOGIES OF THE EYE |
| ***A 61P 27/14*** | EP 2058317 | AMINOPHOSPHORIC ACID ESTER DERIVATIVE AND S1P RECEPTOR MODULATOR CONTAINING THE SAME AS ACTIVE INGREDIENT |
| ***A 61P 27/16*** | EP 2342203* | PYRAZOLO PYRIDINE DERIVATIVES AS NADPH OXIDASE INHIBITORS |
| ***A 61P 29/00*** | EP 2058317 | AMINOPHOSPHORIC ACID ESTER DERIVATIVE AND S1P RECEPTOR MODULATOR CONTAINING THE SAME AS ACTIVE INGREDIENT |
| ***A 61P 29/00*** | EP 2069354* | Aza-benzofuranyl compounds and methods of use |
| ***A 61P 29/00*** | EP 2120920* | OXYLIPINS FROM LONG CHAIN POLYUNSATURATED FATTY ACIDS AND METHODS OF MAKING AND USING THE SAME |
| ***A 61P 29/00*** | EP 2251324 | HETEROARYL-ALKYLCARBAMATE COMPOUNDS AND THEIR USE AS INHIBITORS OF THE FAAH ENZYME |
| ***A 61P 29/00*** | EP 2323737* | TRIAZOLE COMPOUNDS THAT MODULATE HSP90 ACTIVITY |
| ***A 61P 29/00*** | EP 2324015* | THIOPHENE-2-CARBOXAMIDE DERIVATIVES, PREPARATION THEREOF AND THERAPEUTIC USE THEREOF |
| ***A 61P 29/00*** | EP 2330193 | IMPROVED ANTIBODY MOLECULE |
| ***A 61P 29/00*** | EP 2331515* | INSCETICIDAL COMPOUNDS |
| ***A 61P 29/00*** | EP 2334313* | HOMEOPATHIC THERAPEUTIC METHOD |
| ***A 61P 29/00*** | EP 2334670* | NEW 2-AMIDOTHIADIAZOLE DERIVATIVES |
| ***A 61P 29/00*** | EP 2334673* | PYRIDO[3,2-d]PYRIDAZINE-2(1H)-ONE COMPOUNDS AS |

| (51) | Broj objave evropske prijave patenta | (51) |
|---|---|---|
| | | P38 MODULATORS AND METHODS OF USE THEREOF |
| ***A 61P 29/00*** | EP 2334674* | PYRIDAZINO- PYRIDINONE COMPOUNDS FOR THE TREATMENT OF PROTEIN KINASE MEDIATED DISEASES. |
| ***A 61P 29/00*** | EP 2342200* | COMPOUNDS WHICH SELECTIVELY MODULATE THE CB2 RECEPTOR |
| ***A 61P 29/00*** | EP 2342205* | SUBSTITUTED TRICYCLIC ACID DERIVATIVES AS S1P1 RECEPTOR AGONISTS USEFUL IN THE TREATMENT OF AUTOIMMUNE AND INFLAMMATORY DISORDERS |
| ***A 61P 31/00*** | EP 2099760* | ANTIBACTERIAL QUINOLINE DERIVATIVES |
| ***A 61P 31/00*** | EP 2331564* | METHODS OF TREATING INFLAMMATION |
| ***A 61P 31/00*** | EP 2334674* | PYRIDAZINO- PYRIDINONE COMPOUNDS FOR THE TREATMENT OF PROTEIN KINASE MEDIATED DISEASES. |
| ***A 61P 31/00*** | EP 2335701 | Heterocyclic aspartyl protease inhibitors |
| ***A 61P 31/00*** | EP 2343069 | Heterocyclic aspartyl protease inhibitors |
| ***A 61P 31/04*** | EP 2058317 | AMINOPHOSPHORIC ACID ESTER DERIVATIVE AND S1P RECEPTOR MODULATOR CONTAINING THE SAME AS ACTIVE INGREDIENT |
| ***A 61P 31/04*** | EP 2334333* | POLYMER CONJUGATES OF V681-LIKE PEPTIDES |
| ***A 61P 31/04*** | EP 2338902 | Klebsiella antigens |
| ***A 61P 31/04*** | EP 2340045* | POLYMER CONJUGATES OF PROTEGRIN PEPTIDES |
| ***A 61P 31/04*** | EP 2341053 | CEPHALOSPORIN HAVING CATECHOL GROUP |
| ***A 61P 31/10*** | EP 2124914* | METHOD AND SYSTEM FOR ENHANCING SELF-TREATMENT OF ONYCHOMYCOSIS |
| ***A 61P 31/10*** | EP 2136808* | PIPERAZINE-SUBSTITUTED PYRIDAZINONE DERIVATIVES USEFUL AS GLUCAN SYNTHASE INHIBITORS |
| ***A 61P 31/12*** | EP 2331538* | CRYSTALLINE FORMS OF A 2-THIAZOLYL- 4-QUINOLINYL-OXY DERIVATIVE, A POTENT HCV INHIBITOR |
| ***A 61P 31/12*** | EP 2342205* | SUBSTITUTED TRICYCLIC ACID DERIVATIVES AS S1P1 RECEPTOR AGONISTS USEFUL IN THE TREATMENT OF AUTOIMMUNE AND INFLAMMATORY DISORDERS |
| ***A 61P 31/14*** | EP 2324062* | CHIMERIC RESPIRATORY SYNCYTIAL VIRUS POLYPEPTIDE ANTIGENS |
| ***A 61P 31/14*** | EP 2337781* | ANTI-VIRAL COMPOUNDS TO TREAT HCV INFECTION |
| ***A 61P 35/00*** | EP 2058317 | AMINOPHOSPHORIC ACID ESTER DERIVATIVE AND S1P RECEPTOR MODULATOR CONTAINING THE SAME AS ACTIVE INGREDIENT |
| ***A 61P 35/00*** | EP 2069354* | Aza-benzofuranyl compounds and methods of use |
| ***A 61P 35/00*** | EP 2081937* | TRIAZOLOPYRIDAZINE PROTEIN KINASE MODULATORS |
| ***A 61P 35/00*** | EP 2086981* | COMPOUNDS FOR INHIBITING MITOTIC PROGRESSION |
| ***A 61P 35/00*** | EP 2104513* | OVR110 ANTIBODY COMPOSITIONS AND METHODS OF USE |
| ***A 61P 35/00*** | EP 2121687* | TRICYCLIC AMINE DERIVATIVES AS PROTEIN TYROSINE KINASE INHIBITORS |
| ***A 61P 35/00*** | EP 2137155* | QUINOLINE DERIVATIVES, PHARMACEUTICAL COMPOSITIONS COMPRISING THEM, AND THEIR USE IN TREATING CENTRAL NERVOUS SYSTEM AND PERIPHERAL DISEASES |
| ***A 61P 35/00*** | EP 2139482* | TREATMENT FOR MULTIPLE MYELOMA |
| ***A 61P 35/00*** | EP 2253614 | Inhibitors of IAP |
| ***A 61P 35/00*** | EP 2323737* | TRIAZOLE COMPOUNDS THAT MODULATE HSP90 ACTIVITY |
| ***A 61P 35/00*** | EP 2324012* | NEW COMPOUNDS |
| ***A 61P 35/00*** | EP 2324024* | DIAZACARBAZOLES AND METHODS OF USE |
| ***A 61P 35/00*** | EP 2324025* | PURINE DERIVATIVES FOR USE IN THE TREATMENT OF ALLERGIC, INFLAMMATORY AND INFECTIOUS DISEASES |
| ***A 61P 35/00*** | EP 2324026* | PURINE DERIVATIVES FOR USE IN THE TREATMENT OF ALLERGIC, INFLAMMATORY AND INFECTIOUS DISEASES |
| ***A 61P 35/00*** | EP 2326631* | MIF MODULATORS |

| (51) | Broj objave evropske prijave patenta | (51) |
|---|---|---|
| ***A 61P 35/00*** | EP 2326653* | NEW (POLY)AMINOALKYLAMINOALKYLAMIDE, ALKYL-UREA, OR ALKYL-SULFONAMIDE DERIVATIVES OF EPIPODOPHYLLOTOXIN, A PROCESS FOR PREPARING THEM, AND APPLICATION THEREOF IN THERAPY AS ANTICANCER AGENTS |
| ***A 61P 35/00*** | EP 2328872* | PYRAZOLE COMPOUNDS 436 |
| ***A 61P 35/00*** | EP 2331091* | PHARMACEUTICAL COMBINATION OF 1-(2-TETRAHYDROFURYL)-5-FLUOROURACIL AND CAFFEIC ACID PHENETHYL ESTER FOR ORAL TREATING OF TUMORS |
| ***A 61P 35/00*** | EP 2331118* | COMPOSITION OF TUMOR-ASSOCIATED PEPTIDES AND RELATED ANTI-CANCER VACCINE FOR THE TREATMENT OF GLIOBLASTOMA (GBM) AND OTHER CANCERS |
| ***A 61P 35/00*** | EP 2331140* | MULTI-ARM POLYMERIC ALKANOATE CONJUGATES |
| ***A 61P 35/00*** | EP 2331523* | PYRIDINE AND PYRIMIDINE BASED COMPOUNDS AS WNT SIGNALING PATHWAY INHIBITORS FOR THE TREATMENT OF CANCER |
| ***A 61P 35/00*** | EP 2331546* | 2-ALKYL-6-CYCLOAMINO-3-(PYRIDIN-4-YL)IMIDAZO[1,2-IB]-PYRIDAZINE DERIVATIVES, PREPARATION THEREOF, AND THERAPEUTIC APPLICATION THEREOF |
| ***A 61P 35/00*** | EP 2331547* | PYRROLOPYRIMIDINE COMPOUNDS AS CDK INHIBITORS |
| ***A 61P 35/00*** | EP 2335736 | PHARMACEUTICAL COMPOSITION UTILISING COMBINATIONS OF VARIANTS OF THE GONADOTROPIN-LIBERATING HORMONE (GNRH) AS IMMUNOGEN |
| ***A 61P 35/00*** | EP 2340021* | SUBSTITUTED PYRROLIDINE-2-CARBOXAMIDES |
| ***A 61P 35/00*** | EP 2340042* | METHODS AND COMPOSITIONS FOR THE TREATMENT OF CANCER |
| ***A 61P 35/00*** | EP 2341906* | HEMATOPOIETIC PROTECTION AGAINST IONIZING RADIATION USING SELECTIVE CYCLIN-DEPENDENT KINASE 4/6 INHIBITORS |
| ***A 61P 35/00*** | EP 2341911* | HEMATOPOIETIC PROTECTION AGAINST CHEMOTHERAPEUTIC COMPOUNDS USING SELECTIVE CYCLIN-DEPENDENT KINASE 4/6 INHIBITORS |
| ***A 61P 35/00*** | EP 2341927* | NOVEL IMMUNOTHERAPY AGAINST SEVERAL TUMORS INCLUDING NEURONAL AND BRAIN TUMORS |
| ***A 61P 35/00*** | EP 2342200* | COMPOUNDS WHICH SELECTIVELY MODULATE THE CB2 RECEPTOR |
| ***A 61P 35/02*** | EP 2107906* | NOVEL THERAPEUTIC USE FOR TREATING LEUKAEMIA |
| ***A 61P 35/02*** | EP 2241577 | Anti-CD37 antibodies |
| ***A 61P 35/04*** | EP 2331091* | PHARMACEUTICAL COMBINATION OF 1-(2-TETRAHYDROFURYL)-5-FLUOROURACIL AND CAFFEIC ACID PHENETHYL ESTER FOR ORAL TREATING OF TUMORS |
| ***A 61P 37/00*** | EP 2107907* | Combination of pemirolast and ramatroban for use in the treatment of inflammatory disorders |
| ***A 61P 37/00*** | EP 2256203 | IL-23 and its receptor; related reagents and methods |
| ***A 61P 37/00*** | EP 2324025* | PURINE DERIVATIVES FOR USE IN THE TREATMENT OF ALLERGIC, INFLAMMATORY AND INFECTIOUS DISEASES |
| ***A 61P 37/00*** | EP 2324026* | PURINE DERIVATIVES FOR USE IN THE TREATMENT OF ALLERGIC, INFLAMMATORY AND INFECTIOUS DISEASES |
| ***A 61P 37/00*** | EP 2326621* | SUBSTITUTED 1,2,3,4-TETRAHYDROCYCLOPENTA[b]INDOL-3-YL) ACETIC ACID DERIVATIVES USEFUL IN THE TREATMENT OF AUTOIMMUNE AND INFLAMMATORY DISORDERS |
| ***A 61P 37/00*** | EP 2341934* | METHODS TO REDUCE B-HELPER T CELLS TO TREAT AUTOIMMUNE DISEASES |
| ***A 61P 37/00*** | EP 2342200* | COMPOUNDS WHICH SELECTIVELY MODULATE THE CB2 RECEPTOR |
| ***A 61P 37/00*** | EP 2342205* | SUBSTITUTED TRICYCLIC ACID DERIVATIVES AS S1P1 |

| (51) | Broj objave evropske prijave patenta | (51) |
|---|---|---|
| | | RECEPTOR AGONISTS USEFUL IN THE TREATMENT OF AUTOIMMUNE AND INFLAMMATORY DISORDERS |
| ***A 61P 37/02*** | EP 2058317 | AMINOPHOSPHORIC ACID ESTER DERIVATIVE AND S1P RECEPTOR MODULATOR CONTAINING THE SAME AS ACTIVE INGREDIENT |
| ***A 61P 37/04*** | EP 2324062* | CHIMERIC RESPIRATORY SYNCYTIAL VIRUS POLYPEPTIDE ANTIGENS |
| ***A 61P 37/04*** | EP 2324826 | HYDROPHILIC AMINO ACID-CONTAINING PREPARATION HAVING IMPROVED TASTE |
| ***A 61P 37/04*** | EP 2342220* | METHODS AND SYSTEMS FOR PREDICTING MISFOLDED PROTEIN EPITOPES |
| ***A 61P 37/06*** | EP 2342228* | PD-1 SPECIFIC ANTIBODIES AND USES THEREOF |
| ***A 61P 37/08*** | EP 2337779* | 2-OXO-1,2-DIHYDRO-QUINOLINE MODULATORS OF IMMUNE FUNCTION |
| ***A 61P 39/00*** | EP 2033641 | Process of preparation of extracts rich in proanthocyanidins |
| ***A 61P 43/00*** | EP 2094672* | ARYLSULFONAMIDE COMPOUNDS |
| ***A 61P 43/00*** | EP 2324826 | HYDROPHILIC AMINO ACID-CONTAINING PREPARATION HAVING IMPROVED TASTE |
| ***A 61P 43/00*** | EP 2328902* | PYRAZOLO [5,1-B]OXAZOLE DERIVATIVES AS CRF1 ANTAGONISTS |
| ***A 61P 43/00*** | EP 2332943 | NOVEL FUSED AMINODIHYDROTHIAZINE DERIVATIVE |
| ***A 61P 43/00*** | EP 2335736 | PHARMACEUTICAL COMPOSITION UTILISING COMBINATIONS OF VARIANTS OF THE GONADOTROPIN-LIBERATING HORMONE (GNRH) AS IMMUNOGEN |
| ***A 63B 69/36*** | EP 2233932 | Optical system and method for determining direction, velocity and position of a ball traversing a plane |
| ***B 01D 3/00*** | EP 2243529 | Fluid entry device |
| ***B 01D 3/00*** | EP 2337777* | APPARATUS, SYSTEMS, AND METHODS FOR PURIFICATION OF ISOCYANATE MIXTURES |
| ***B 01D 3/00*** | EP 2342176* | APPARATUS, SYSTEMS, AND METHODS FOR PURIFICATION OF ISOCYANATE MIXTURES |
| ***B 01D 3/14*** | EP 2337777* | APPARATUS, SYSTEMS, AND METHODS FOR PURIFICATION OF ISOCYANATE MIXTURES |
| ***B 01D 3/14*** | EP 2342176* | APPARATUS, SYSTEMS, AND METHODS FOR PURIFICATION OF ISOCYANATE MIXTURES |
| ***B 01D 21/02*** | EP 2204340 | Portable tank apparatus and method of use |
| ***B 01D 47/06*** | EP 2331875* | METHOD AND SYSTEM FOR COOLING HOT GASES BY WATER INJECTION |
| ***B 01D 53/78*** | EP 2331875* | METHOD AND SYSTEM FOR COOLING HOT GASES BY WATER INJECTION |
| ***B 01F 17/30*** | EP 2337460* | EMULSIFIED FOODS |
| ***B 01J 13/04*** | EP 2288257* | MICROENCAPSULATION PROCESS FOR PRODUCING MICROCAPSULES COMPRISING A SURFACE-MODIFIED PARTICULATE INORGANIC MATERIAL IN A CROSS-LINKED MICROCAPSULE WALL |
| ***B 01J 13/14*** | EP 2288257* | MICROENCAPSULATION PROCESS FOR PRODUCING MICROCAPSULES COMPRISING A SURFACE-MODIFIED PARTICULATE INORGANIC MATERIAL IN A CROSS-LINKED MICROCAPSULE WALL |
| ***B 01J 20/32*** | EP 2331568* | TREATING INFLAMMATORY CONDITIONS |
| ***B 01J 23/42*** | EP 2328900* | PROCESS FOR MAKING MORPHINAN-6 alpha-OLS |
| ***B 01L 3/00*** | EP 2126556* | ELECTROCHEMICAL BIOSENSOR MEASURING SYSTEM |
| ***B 01L 3/00*** | EP 2286919 | Filtration device for analyses |
| ***B 01L 3/00*** | EP 2323767* | APPARATUS AND METHODS FOR MAKING, STORING, AND ADMINISTERING FREEZE-DRIED MATERIALS SUCH AS FREEZE-DRIED PLASMA |
| ***B 01L 3/14*** | EP 2286919 | Filtration device for analyses |
| ***B 02C 2/00*** | EP 2326738* | MILLING CONE FOR A COMPRESSION CRUSHER |
| ***B 02C 13/28*** | EP 2323770* | COMPOSITE IMPACTOR FOR PERCUSSION CRUSHERS |
| ***B 05B 11/00*** | EP 2246267 | Container associable with airless pumps and method for its production |
| ***B 05D 1/30*** | EP 2339922* | DEVICE FOR COATING FOOD PRODUCTS, |

| (51) | Broj objave evropske prijave patenta | (51) |
|---|---|---|
| | | PARTICULARLY FRUITS AND VEGETABLES |
| ***B 05D 5/06*** | EP 2342292* | RETROREFLECTIVE COATING AND METHOD FOR APPLYING A RETROREFLECTIVE COATING ON A STRUCTURE |
| ***B 07C 5/342*** | EP 2328693* | METHOD FOR AUTOMATICALLY IDENTIFYING A MATERIAL OR AN OBJECT |
| ***B 09B 3/00*** | EP 2333057 | SOLID SUPPORT COMPRISING MICROORGANISMS CAPABLE OF CONDUCTING PARALLEL MULTIPLE MINERALIZATION IMMOBILIZED THEREON, CATALYST COLUMN AND METHOD FOR PRODUCING SOLID MEDIUM FOR CULTIVATING PLANTS |
| ***B 21C 37/15*** | EP 2331271* | METHOD OF PROFILING A TUBE OF GIVEN LENGTH |
| ***B 21C 37/20*** | EP 2331271* | METHOD OF PROFILING A TUBE OF GIVEN LENGTH |
| ***B 21D 5/08*** | EP 2331271* | METHOD OF PROFILING A TUBE OF GIVEN LENGTH |
| ***B 21D 5/12*** | EP 2331271* | METHOD OF PROFILING A TUBE OF GIVEN LENGTH |
| ***B 21D 15/02*** | EP 2331271* | METHOD OF PROFILING A TUBE OF GIVEN LENGTH |
| ***B 21D 39/00*** | EP 2326438* | APPARATUS AND METHOD TO CRADLE AND HEM PANELS AT AN ASSEMBLY-LINE STATION |
| ***B 21D 39/02*** | EP 2326438* | APPARATUS AND METHOD TO CRADLE AND HEM PANELS AT AN ASSEMBLY-LINE STATION |
| ***B 21F 25/00*** | EP 2251116 | Barbed tape with sensor conductor and reinforcement wire |
| ***B 22D 17/04*** | EP 2326442* | MULTI-COMPONENT METAL INJECTION MOLDING |
| ***B 24D 3/32*** | EP 2323813* | METHOD FOR PRODUCING A TOOL AND TOOL PRODUCED ACCORDING TO SAID METHOD |
| ***B 24D 18/00*** | EP 2323813* | METHOD FOR PRODUCING A TOOL AND TOOL PRODUCED ACCORDING TO SAID METHOD |
| ***B 26D 3/26*** | EP 2248450 | Device for handling food |
| ***B 27D 5/00*** | EP 2337681* | WOOD-METAL COMPOSITE STRUCTURE |
| ***B 28B 11/24*** | EP 2266769 | A process for manufacturing very slim ceramic tiles |
| ***B 28B 19/00*** | EP 1826330 | Method for manufacturing a prefabricated wall element |
| ***B 29C 45/28*** | EP 2156937 | Injection moulding tool with closable heating channel nozzle |
| ***B 29C 49/06*** | EP 2246267 | Container associable with airless pumps and method for its production |
| ***B 29C 49/16*** | EP 2246267 | Container associable with airless pumps and method for its production |
| ***B 29C 49/18*** | EP 2246267 | Container associable with airless pumps and method for its production |
| ***B 29C 49/24*** | EP 2246267 | Container associable with airless pumps and method for its production |
| ***B 30B 1/12*** | EP 2248450 | Device for handling food |
| ***B 30B 3/00*** | EP 2323840* | IMPROVEMENTS IN CORRUGATING ROLLERS |
| ***B 30B 11/02*** | EP 2335915 | TABLET COMPRESSION DIE |
| ***B 30B 11/18*** | EP 2323840* | IMPROVEMENTS IN CORRUGATING ROLLERS |
| ***B 31F 1/20*** | EP 2323840* | IMPROVEMENTS IN CORRUGATING ROLLERS |
| ***B 32B 3/28*** | EP 2340161* | MANUFACTURING PROCESS |
| ***B 32B 13/04*** | EP 2323842* | PLASTIC COATED COMPOSITE BUILDING BOARDS AND METHOD OF MAKING SAME |
| ***B 32B 15/085*** | EP 2337681* | WOOD-METAL COMPOSITE STRUCTURE |
| ***B 32B 15/10*** | EP 2337681* | WOOD-METAL COMPOSITE STRUCTURE |
| ***B 32B 21/06*** | EP 2342077* | COATING FOR WOOD BOARD AND WOOD BOARD |
| ***B 32B 21/08*** | EP 2334744* | GLUE LINE MATERIAL FOR WOOD BOARD AND WOOD BOARD |
| ***B 32B 21/08*** | EP 2337681* | WOOD-METAL COMPOSITE STRUCTURE |
| ***B 32B 21/08*** | EP 2342077* | COATING FOR WOOD BOARD AND WOOD BOARD |
| ***B 32B 27/10*** | EP 2342077* | COATING FOR WOOD BOARD AND WOOD BOARD |
| ***B 32B 27/32*** | EP 2342077* | COATING FOR WOOD BOARD AND WOOD BOARD |
| ***B 32B 29/08*** | EP 2340161* | MANUFACTURING PROCESS |
| ***B 41J 2/01*** | EP 2233292 | INKJET PRINTER AND PRINTING METHOD USING SAME |
| ***B 41J 2/01*** | EP 2233305 | PRINTER-PLOTTER |
| ***B 41J 2/175*** | EP 2216180 | A system for supplying ink to a printing machine |
| ***B 41J 2/175*** | EP 2233297 | INK SUPPLY DEVICE FOR INKJET PRINTER, AND REVERSE FLOW BLOCKING DEVICE FOR SAME |

| (51) | Broj objave evropske prijave patenta | (51) |
|---|---|---|
| ***B 41J 3/54*** | EP 2233305 | PRINTER-PLOTTER |
| ***B 41J 11/66*** | EP 2233305 | PRINTER-PLOTTER |
| ***B 42D 15/02*** | EP 2082895 | Massage card |
| ***B 60K 7/00*** | EP 2329983 | Wheel drive assembly and a spindle carrier |
| ***B 60K 17/04*** | EP 2329983 | Wheel drive assembly and a spindle carrier |
| ***B 61D 43/00*** | EP 2323886* | WHEELSET BEARING HOUSING HAVING A POSITION DETECTION DEVICE FOR A RAIL VEHICLE AND RAIL VEHICLE EQUIPPED THEREWITH |
| ***B 61F 15/20*** | EP 2323886* | WHEELSET BEARING HOUSING HAVING A POSITION DETECTION DEVICE FOR A RAIL VEHICLE AND RAIL VEHICLE EQUIPPED THEREWITH |
| ***B 61L 25/02*** | EP 2323886* | WHEELSET BEARING HOUSING HAVING A POSITION DETECTION DEVICE FOR A RAIL VEHICLE AND RAIL VEHICLE EQUIPPED THEREWITH |
| ***B 62B 5/02*** | EP 2256014 | Mobile stairlift device |
| ***B 62D 65/06*** | EP 2326438* | APPARATUS AND METHOD TO CRADLE AND HEM PANELS AT AN ASSEMBLY-LINE STATION |
| ***B 63B 19/00*** | EP 2331392* | LOCKING ELEMENT AND LOCKING SYSTEM FOR A SHIP'S DOOR, SHIP'S WINDOW OR SHIP'S HATCH |
| ***B 63B 19/14*** | EP 2331392* | LOCKING ELEMENT AND LOCKING SYSTEM FOR A SHIP'S DOOR, SHIP'S WINDOW OR SHIP'S HATCH |
| ***B 63B 19/24*** | EP 2331392* | LOCKING ELEMENT AND LOCKING SYSTEM FOR A SHIP'S DOOR, SHIP'S WINDOW OR SHIP'S HATCH |
| ***B 63B 43/32*** | EP 2331392* | LOCKING ELEMENT AND LOCKING SYSTEM FOR A SHIP'S DOOR, SHIP'S WINDOW OR SHIP'S HATCH |
| ***B 64F 5/00*** | EP 2138402 | Variable modular docking system |
| ***B 65B 1/24*** | EP 2246261 | Method and device for levelling packages filled with bulk material or paste goods |
| ***B 65B 13/04*** | EP 2342135* | SYSTEMS FOR MONITORING AND CONTROLLING USAGE OF MATERIALS |
| ***B 65B 31/04*** | EP 2241507 | Apparatus for filling flexible containers with a fluid, for example foodstuffs, such as cream, yoghurt, fruit juices and purées, vegetables and similar |
| ***B 65B 31/08*** | EP 2334561* | SYSTEM, METHOD AND DEVICE FOR STERILIZATION AND PACKAGING FOR USE THEREFOR |
| ***B 65B 39/00*** | EP 2241507 | Apparatus for filling flexible containers with a fluid, for example foodstuffs, such as cream, yoghurt, fruit juices and purées, vegetables and similar |
| ***B 65B 39/04*** | EP 2241507 | Apparatus for filling flexible containers with a fluid, for example foodstuffs, such as cream, yoghurt, fruit juices and purées, vegetables and similar |
| ***B 65B 55/02*** | EP 2241507 | Apparatus for filling flexible containers with a fluid, for example foodstuffs, such as cream, yoghurt, fruit juices and purées, vegetables and similar |
| ***B 65B 55/02*** | EP 2334561* | SYSTEM, METHOD AND DEVICE FOR STERILIZATION AND PACKAGING FOR USE THEREFOR |
| ***B 65B 57/02*** | EP 2342135* | SYSTEMS FOR MONITORING AND CONTROLLING USAGE OF MATERIALS |
| ***B 65B 57/08*** | EP 2342135* | SYSTEMS FOR MONITORING AND CONTROLLING USAGE OF MATERIALS |
| ***B 65B 61/24*** | EP 2246261 | Method and device for levelling packages filled with bulk material or paste goods |
| ***B 65D 1/02*** | EP 2334587* | IMPROVEMENTS IN RELATION TO TOOLS |
| ***B 65D 1/34*** | EP 2334565* | TRAY FOR USE IN PERFORMING X-RAY INSPECTION OF ARTICLES AT A SECURITY CHECKPOINT AND METHOD OF USING SAME |
| ***B 65D 5/38*** | EP 2331414* | DUAL COMPARTMENT SLIDE AND SHELL CONTAINER |
| ***B 65D 5/72*** | EP 2331414* | DUAL COMPARTMENT SLIDE AND SHELL CONTAINER |
| ***B 65D 21/02*** | EP 2334565* | TRAY FOR USE IN PERFORMING X-RAY INSPECTION OF ARTICLES AT A SECURITY CHECKPOINT AND METHOD OF USING SAME |
| ***B 65D 23/02*** | EP 2246267 | Container associable with airless pumps and method for its |

| (51) | Broj objave evropske prijave patenta | (51) |
|---|---|---|
| | | production |
| ***B 65D 43/02*** | EP 2202174 | Container lid |
| ***B 65D 43/14*** | EP 2326565* | TWO-PIECE CLOSURE DEVICE |
| ***B 65D 75/58*** | EP 2323920* | DISCHARGE SPOUT FOR FLEXIBLE BAGS |
| ***B 65D 77/20*** | EP 2202174 | Container lid |
| ***B 65D 81/20*** | EP 2334561* | SYSTEM, METHOD AND DEVICE FOR STERILIZATION AND PACKAGING FOR USE THEREFOR |
| ***B 65D 85/804*** | EP 2326223* | SYSTEM, METHOD AND CAPSULE FOR PREPARING A BEVERAGE |
| ***B 65D 88/06*** | EP 2204340 | Portable tank apparatus and method of use |
| ***B 65D 88/12*** | EP 2204340 | Portable tank apparatus and method of use |
| ***B 65D 90/18*** | EP 2256066 | Method for attaching a transport wheel arrangement to a container and a transport wheel arrangment of a a container |
| ***B 65G 7/04*** | EP 2256066 | Method for attaching a transport wheel arrangement to a container and a transport wheel arrangment of a a container |
| ***B 66F 15/00*** | EP 2334587* | IMPROVEMENTS IN RELATION TO TOOLS |
| ***B 67D 1/07*** | EP 2331450* | METHOD FOR CLEANING AND FLUSHING A BEVERAGE DISPENSING SYSTEM |
| ***B 67D 1/08*** | EP 2337762* | A METHOD FOR INSTALLING A COLLAPSIBLE BEVERAGE CONTAINER IN A BEVERAGE DISTRIBUTION UNIT |
| ***B 67D 7/84*** | EP 2337762* | A METHOD FOR INSTALLING A COLLAPSIBLE BEVERAGE CONTAINER IN A BEVERAGE DISTRIBUTION UNIT |
| ***C 02F 1/00*** | EP 2204340 | Portable tank apparatus and method of use |
| ***C 02F 1/66*** | EP 2342164* | PROCESS FOR THE DISPOSAL OF WASTES, PARTICULARLY OF SLUDGES DERIVING FROM WASTE WATER DEPURATION |
| ***C 02F 1/72*** | EP 2342164* | PROCESS FOR THE DISPOSAL OF WASTES, PARTICULARLY OF SLUDGES DERIVING FROM WASTE WATER DEPURATION |
| ***C 02F 9/00*** | EP 2342164* | PROCESS FOR THE DISPOSAL OF WASTES, PARTICULARLY OF SLUDGES DERIVING FROM WASTE WATER DEPURATION |
| ***C 02F 11/06*** | EP 2342164* | PROCESS FOR THE DISPOSAL OF WASTES, PARTICULARLY OF SLUDGES DERIVING FROM WASTE WATER DEPURATION |
| ***C 02F 101/20*** | EP 2342164* | PROCESS FOR THE DISPOSAL OF WASTES, PARTICULARLY OF SLUDGES DERIVING FROM WASTE WATER DEPURATION |
| ***C 02F 101/30*** | EP 2342164* | PROCESS FOR THE DISPOSAL OF WASTES, PARTICULARLY OF SLUDGES DERIVING FROM WASTE WATER DEPURATION |
| ***C 04B 7/02*** | EP 2253600 | Portland limestone calcined clay cement |
| ***C 04B 18/02*** | EP 2334614* | METHOD OF TREATING MARINE SEDIMENTS AND USE OF THE RESULTING SOLID PRODUCT IN MORTARS OR CONCRETES |
| ***C 04B 28/00*** | EP 2253600 | Portland limestone calcined clay cement |
| ***C 04B 28/04*** | EP 2334614* | METHOD OF TREATING MARINE SEDIMENTS AND USE OF THE RESULTING SOLID PRODUCT IN MORTARS OR CONCRETES |
| ***C 04B 28/06*** | EP 2334614* | METHOD OF TREATING MARINE SEDIMENTS AND USE OF THE RESULTING SOLID PRODUCT IN MORTARS OR CONCRETES |
| ***C 04B 28/14*** | EP 2334614* | METHOD OF TREATING MARINE SEDIMENTS AND USE OF THE RESULTING SOLID PRODUCT IN MORTARS OR CONCRETES |
| ***C 04B 28/16*** | EP 2334614* | METHOD OF TREATING MARINE SEDIMENTS AND USE OF THE RESULTING SOLID PRODUCT IN MORTARS OR CONCRETES |
| ***C 04B 30/02*** | EP 2342220* | METHODS AND SYSTEMS FOR PREDICTING MISFOLDED PROTEIN EPITOPES |

| (51) | Broj objave evropske prijave patenta | (51) |
|---|---|---|
| ***C 05F 1/00*** | EP 2333057 | SOLID SUPPORT COMPRISING MICROORGANISMS CAPABLE OF CONDUCTING PARALLEL MULTIPLE MINERALIZATION IMMOBILIZED THEREON, CATALYST COLUMN AND METHOD FOR PRODUCING SOLID MEDIUM FOR CULTIVATING PLANTS |
| ***C 05F 3/00*** | EP 2333057 | SOLID SUPPORT COMPRISING MICROORGANISMS CAPABLE OF CONDUCTING PARALLEL MULTIPLE MINERALIZATION IMMOBILIZED THEREON, CATALYST COLUMN AND METHOD FOR PRODUCING SOLID MEDIUM FOR CULTIVATING PLANTS |
| ***C 05F 5/00*** | EP 2333057 | SOLID SUPPORT COMPRISING MICROORGANISMS CAPABLE OF CONDUCTING PARALLEL MULTIPLE MINERALIZATION IMMOBILIZED THEREON, CATALYST COLUMN AND METHOD FOR PRODUCING SOLID MEDIUM FOR CULTIVATING PLANTS |
| ***C 05F 7/00*** | EP 2333057 | SOLID SUPPORT COMPRISING MICROORGANISMS CAPABLE OF CONDUCTING PARALLEL MULTIPLE MINERALIZATION IMMOBILIZED THEREON, CATALYST COLUMN AND METHOD FOR PRODUCING SOLID MEDIUM FOR CULTIVATING PLANTS |
| ***C 05F 9/00*** | EP 2333057 | SOLID SUPPORT COMPRISING MICROORGANISMS CAPABLE OF CONDUCTING PARALLEL MULTIPLE MINERALIZATION IMMOBILIZED THEREON, CATALYST COLUMN AND METHOD FOR PRODUCING SOLID MEDIUM FOR CULTIVATING PLANTS |
| ***C 05F 17/00*** | EP 2333046 | METHOD FOR PRODUCTION OF SEED MATERIAL FOR MICROORGANISMS OPTIMIZED AS CATALYST FOR PARALLEL COMPLEX MINERALIZATION REACTION |
| ***C 05F 17/00*** | EP 2333057 | SOLID SUPPORT COMPRISING MICROORGANISMS CAPABLE OF CONDUCTING PARALLEL MULTIPLE MINERALIZATION IMMOBILIZED THEREON, CATALYST COLUMN AND METHOD FOR PRODUCING SOLID MEDIUM FOR CULTIVATING PLANTS |
| ***C 05G 5/00*** | EP 2333046 | METHOD FOR PRODUCTION OF SEED MATERIAL FOR MICROORGANISMS OPTIMIZED AS CATALYST FOR PARALLEL COMPLEX MINERALIZATION REACTION |
| ***C 07B 57/00*** | EP 2125743* | (1R,1'R)-ATRACURIUM SALTS SEPARATION PROCESS |
| ***C 07B 57/00*** | EP 2132181* | (1R,1'R)-ATRACURIUM SALTS SEPARATION PROCESS |
| ***C 07B 59/00*** | EP 2334621* | DEUTERATED 2-AMINO-3-HYDROXYPROPANOIC ACID DERIVATIVES |
| ***C 07C 1/00*** | WO 2010043682 | PROCESS FOR THE PREPARATION OF COMPOUNDS USEFUL AS INHIBITORS OF SGLT |
| ***C 07C 53/00*** | EP 2120920* | OXYLIPINS FROM LONG CHAIN POLYUNSATURATED FATTY ACIDS AND METHODS OF MAKING AND USING THE SAME |
| ***C 07C 211/00*** | EP 2069284* | PROCESS AND INTERMEDIATES FOR THE SYNTHESIS OF 2-(QUINOLIN-5-YL)-4,5 DISUBSTITUTED-AZOLE DERIVATIVES |
| ***C 07C 231/08*** | EP 2331495* | PROCESS FOR MANUFACTURING ADAMANTANE DERIVATIVES WITH HIGH YIELD |
| ***C 07C 233/03*** | EP 2331495* | PROCESS FOR MANUFACTURING ADAMANTANE DERIVATIVES WITH HIGH YIELD |
| ***C 07C 233/79*** | EP 2323970* | CYCLOHEXYL AMIDE DERIVATIVES AND THEIR USE AS CRF-1 RECEPTOR ANTAGONISTS |
| ***C 07C 237/06*** | EP 2334621* | DEUTERATED 2-AMINO-3-HYDROXYPROPANOIC ACID DERIVATIVES |
| ***C 07C 237/20*** | EP 2340242* | COMPOUNDS FOR TREATING OPHTHALMIC DISEASES AND DISORDERS |
| ***C 07C 237/26*** | EP 2323972* | C7-FLUORO SUBSTITUTED TETRACYCLINE COMPOUNDS |
| ***C 07C 239/20*** | EP 2323972* | C7-FLUORO SUBSTITUTED TETRACYCLINE COMPOUNDS |
| ***C 07C 245/08*** | EP 2251321 | Monoazo compounds |
| ***C 07C 255/58*** | EP 2323970* | CYCLOHEXYL AMIDE DERIVATIVES AND THEIR USE AS |

| (51) | Broj objave evropske prijave patenta | (51) |
|---|---|---|
| | | CRF-1 RECEPTOR ANTAGONISTS |
| ***C 07C 263/20*** | EP 2337777* | APPARATUS, SYSTEMS, AND METHODS FOR PURIFICATION OF ISOCYANATE MIXTURES |
| ***C 07C 263/20*** | EP 2342176* | APPARATUS, SYSTEMS, AND METHODS FOR PURIFICATION OF ISOCYANATE MIXTURES |
| ***C 07C 265/04*** | EP 2337777* | APPARATUS, SYSTEMS, AND METHODS FOR PURIFICATION OF ISOCYANATE MIXTURES |
| ***C 07C 265/04*** | EP 2342176* | APPARATUS, SYSTEMS, AND METHODS FOR PURIFICATION OF ISOCYANATE MIXTURES |
| ***C 07C 265/14*** | EP 2337777* | APPARATUS, SYSTEMS, AND METHODS FOR PURIFICATION OF ISOCYANATE MIXTURES |
| ***C 07C 271/10*** | EP 2251324 | HETEROARYL-ALKYLCARBAMATE COMPOUNDS AND THEIR USE AS INHIBITORS OF THE FAAH ENZYME |
| ***C 07C 275/16*** | EP 2323972* | C7-FLUORO SUBSTITUTED TETRACYCLINE COMPOUNDS |
| ***C 07C 275/42*** | EP 2323972* | C7-FLUORO SUBSTITUTED TETRACYCLINE COMPOUNDS |
| ***C 07C 309/46*** | EP 2251321 | Monoazo compounds |
| ***C 07C 311/08*** | EP 2323972* | C7-FLUORO SUBSTITUTED TETRACYCLINE COMPOUNDS |
| ***C 07C 311/08*** | EP 2340242* | COMPOUNDS FOR TREATING OPHTHALMIC DISEASES AND DISORDERS |
| ***C 07C 311/21*** | EP 2323972* | C7-FLUORO SUBSTITUTED TETRACYCLINE COMPOUNDS |
| ***C 07C 311/33*** | EP 2340242* | COMPOUNDS FOR TREATING OPHTHALMIC DISEASES AND DISORDERS |
| ***C 07C 311/36*** | EP 2340242* | COMPOUNDS FOR TREATING OPHTHALMIC DISEASES AND DISORDERS |
| ***C 07C 311/39*** | EP 2323970* | CYCLOHEXYL AMIDE DERIVATIVES AND THEIR USE AS CRF-1 RECEPTOR ANTAGONISTS |
| ***C 07D 205/04*** | EP 2323972* | C7-FLUORO SUBSTITUTED TETRACYCLINE COMPOUNDS |
| ***C 07D 205/04*** | EP 2324015* | THIOPHENE-2-CARBOXAMIDE DERIVATIVES, PREPARATION THEREOF AND THERAPEUTIC USE THEREOF |
| ***C 07D 207/06*** | EP 2253614 | Inhibitors of IAP |
| ***C 07D 207/08*** | EP 2253614 | Inhibitors of IAP |
| ***C 07D 207/08*** | EP 2323972* | C7-FLUORO SUBSTITUTED TETRACYCLINE COMPOUNDS |
| ***C 07D 207/09*** | EP 2253614 | Inhibitors of IAP |
| ***C 07D 207/10*** | EP 2323972* | C7-FLUORO SUBSTITUTED TETRACYCLINE COMPOUNDS |
| ***C 07D 207/12*** | EP 2323972* | C7-FLUORO SUBSTITUTED TETRACYCLINE COMPOUNDS |
| ***C 07D 207/14*** | EP 2323972* | C7-FLUORO SUBSTITUTED TETRACYCLINE COMPOUNDS |
| ***C 07D 207/16*** | EP 2323972* | C7-FLUORO SUBSTITUTED TETRACYCLINE COMPOUNDS |
| ***C 07D 207/16*** | EP 2340021* | SUBSTITUTED PYRROLIDINE-2-CARBOXAMIDES |
| ***C 07D 207/34*** | EP 2323972* | C7-FLUORO SUBSTITUTED TETRACYCLINE COMPOUNDS |
| ***C 07D 209/04*** | EP 2326631* | MIF MODULATORS |
| ***C 07D 209/34*** | EP 2324012* | NEW COMPOUNDS |
| ***C 07D 209/44*** | EP 2323972* | C7-FLUORO SUBSTITUTED TETRACYCLINE COMPOUNDS |
| ***C 07D 209/52*** | EP 2121604* | BISULFITE PURIFICATION OF AN ALPHA-KETO AMIDE |
| ***C 07D 209/52*** | EP 2323972* | C7-FLUORO SUBSTITUTED TETRACYCLINE COMPOUNDS |
| ***C 07D 209/70*** | EP 2326621* | SUBSTITUTED 1,2,3,4-TETRAHYDROCYCLOPENTA[b]INDOL-3-YL) ACETIC ACID DERIVATIVES USEFUL IN THE TREATMENT OF AUTOIMMUNE AND INFLAMMATORY DISORDERS |
| ***C 07D 209/88*** | EP 2326621* | SUBSTITUTED 1,2,3,4-TETRAHYDROCYCLOPENTA[b]INDOL-3-YL) ACETIC ACID DERIVATIVES USEFUL IN THE TREATMENT OF AUTOIMMUNE AND INFLAMMATORY DISORDERS |
| ***C 07D 211/06*** | EP 2331097* | METHODS FOR TREATING CNS DISORDERS |
| ***C 07D 211/38*** | EP 2324015* | THIOPHENE-2-CARBOXAMIDE DERIVATIVES, PREPARATION THEREOF AND THERAPEUTIC USE THEREOF |
| ***C 07D 211/46*** | EP 2328868* | NOVEL COMPOUNDS ACTIVE AS MUSCARINIC RECEPTOR ANTAGONISTS |
| ***C 07D 211/62*** | EP 2137152* | NOVEL BENZAMIDE DERIVATIVES AND PROCESS FOR THE PREPARATION THEREOF |
| ***C 07D 211/62*** | EP 2324015* | THIOPHENE-2-CARBOXAMIDE DERIVATIVES, |

| (51) | Broj objave evropske prijave patenta | (51) |
|---|---|---|
| | | PREPARATION THEREOF AND THERAPEUTIC USE THEREOF |
| ***C 07D 211/64*** | EP 2324015* | THIOPHENE-2-CARBOXAMIDE DERIVATIVES, PREPARATION THEREOF AND THERAPEUTIC USE THEREOF |
| ***C 07D 211/80*** | EP 2328869* | HETEROARYL ANTAGONISTS OF PROSTAGLANDIN D2 RECEPTORS |
| ***C 07D 213/02*** | EP 2328869* | HETEROARYL ANTAGONISTS OF PROSTAGLANDIN D2 RECEPTORS |
| ***C 07D 213/46*** | EP 2272831 | Process for the preparation of arylpyridinyl compounds |
| ***C 07D 213/74*** | EP 2323970* | CYCLOHEXYL AMIDE DERIVATIVES AND THEIR USE AS CRF-1 RECEPTOR ANTAGONISTS |
| ***C 07D 213/75*** | EP 2323970* | CYCLOHEXYL AMIDE DERIVATIVES AND THEIR USE AS CRF-1 RECEPTOR ANTAGONISTS |
| ***C 07D 213/84*** | EP 2323970* | CYCLOHEXYL AMIDE DERIVATIVES AND THEIR USE AS CRF-1 RECEPTOR ANTAGONISTS |
| ***C 07D 215/04*** | EP 2251324 | HETEROARYL-ALKYLCARBAMATE COMPOUNDS AND THEIR USE AS INHIBITORS OF THE FAAH ENZYME |
| ***C 07D 215/22*** | EP 2099760* | ANTIBACTERIAL QUINOLINE DERIVATIVES |
| ***C 07D 215/227*** | EP 2337779* | 2-OXO-1,2-DIHYDRO-QUINOLINE MODULATORS OF IMMUNE FUNCTION |
| ***C 07D 215/52*** | EP 2137155* | QUINOLINE DERIVATIVES, PHARMACEUTICAL COMPOSITIONS COMPRISING THEM, AND THEIR USE IN TREATING CENTRAL NERVOUS SYSTEM AND PERIPHERAL DISEASES |
| ***C 07D 215/58*** | EP 2337779* | 2-OXO-1,2-DIHYDRO-QUINOLINE MODULATORS OF IMMUNE FUNCTION |
| ***C 07D 217/20*** | EP 2125743* | (1R,1'R)-ATRACURIUM SALTS SEPARATION PROCESS |
| ***C 07D 217/20*** | EP 2132181* | (1R,1'R)-ATRACURIUM SALTS SEPARATION PROCESS |
| ***C 07D 217/26*** | EP 2342182* | ISOQUINOLINONE DERIVATIVES AS NK3 ANTAGONISTS |
| ***C 07D 223/16*** | EP 2326625* | BENZAZEPINE DERIVATIVES AND THEIR USE AS HSTAMINE H3 ANTAGONISTS |
| ***C 07D 231/14*** | EP 2328872* | PYRAZOLE COMPOUNDS 436 |
| ***C 07D 231/40*** | EP 2334646* | SUBSTITUTED BENZAMIDES AS CANNABINOID RECEPTOR LIGANDS |
| ***C 07D 233/00*** | EP 2114895* | TALARAZOLE METABOLITES |
| ***C 07D 233/30*** | EP 2328874* | COMPOUNDS, COMPOSITIONS AND METHODS OF USING SAME FOR MODULATING URIC ACID LEVELS |
| ***C 07D 233/42*** | EP 2328874* | COMPOUNDS, COMPOSITIONS AND METHODS OF USING SAME FOR MODULATING URIC ACID LEVELS |
| ***C 07D 233/54*** | EP 2251324 | HETEROARYL-ALKYLCARBAMATE COMPOUNDS AND THEIR USE AS INHIBITORS OF THE FAAH ENZYME |
| ***C 07D 233/88*** | EP 2335701 | Heterocyclic aspartyl protease inhibitors |
| ***C 07D 233/88*** | EP 2343069 | Heterocyclic aspartyl protease inhibitors |
| ***C 07D 235/14*** | EP 2251324 | HETEROARYL-ALKYLCARBAMATE COMPOUNDS AND THEIR USE AS INHIBITORS OF THE FAAH ENZYME |
| ***C 07D 237/08*** | EP 2251324 | HETEROARYL-ALKYLCARBAMATE COMPOUNDS AND THEIR USE AS INHIBITORS OF THE FAAH ENZYME |
| ***C 07D 239/22*** | EP 2335701 | Heterocyclic aspartyl protease inhibitors |
| ***C 07D 239/22*** | EP 2343069 | Heterocyclic aspartyl protease inhibitors |
| ***C 07D 239/38*** | EP 2331513* | PROCESS FOR PREPARATION OF BOSENTAN |
| ***C 07D 239/48*** | EP 2323992* | 5-ALKYNYL-PYRIMIDINES |
| ***C 07D 239/52*** | EP 2343283 | OPTICALLY ACTIVE DIFLUOROMETHANESULFONANILIDE DERIVATIVE AND HERBICIDE |
| ***C 07D 239/54*** | EP 2331513* | PROCESS FOR PREPARATION OF BOSENTAN |
| ***C 07D 239/69*** | EP 2331513* | PROCESS FOR PREPARATION OF BOSENTAN |
| ***C 07D 239/84*** | EP 2123641 | CRYSTAL, AMORPHOUS FORM AND SALT OF METHYL N-[3-(6,7-DIMETHOXY- 2-METHYLAMINOQUINAZOLIN-4-YL)PHENYL]TEREPHTHALAMIC ACID |
| ***C 07D 239/94*** | EP 2094672* | ARYLSULFONAMIDE COMPOUNDS |
| ***C 07D 241/40*** | EP 2328877* | 1,4-BENZOXAZINE COMPOUNDS AND DERIVATIVES |

| (51) | Broj objave evropske prijave patenta | (51) |
|---|---|---|
| | | THEREOF AS THERAPEUTIC DRUGS FOR THE TREATMENT OF NEURODEGENERATIVE CONDITIONS |
| ***C 07D 249/08*** | EP 2323737* | TRIAZOLE COMPOUNDS THAT MODULATE HSP90 ACTIVITY |
| ***C 07D 249/08*** | EP 2328879* | COMPOUNDS, COMPOSITIONS AND METHODS OF USING SAME FOR MODULATING URIC ACID LEVELS |
| ***C 07D 249/10*** | EP 2328879* | COMPOUNDS, COMPOSITIONS AND METHODS OF USING SAME FOR MODULATING URIC ACID LEVELS |
| ***C 07D 249/10*** | EP 2328893* | TRIAZOLE COMPOUNDS THAT MODULATE HSP90 ACTIVITY |
| ***C 07D 249/12*** | EP 2323737* | TRIAZOLE COMPOUNDS THAT MODULATE HSP90 ACTIVITY |
| ***C 07D 249/12*** | EP 2328879* | COMPOUNDS, COMPOSITIONS AND METHODS OF USING SAME FOR MODULATING URIC ACID LEVELS |
| ***C 07D 249/14*** | EP 2323737* | TRIAZOLE COMPOUNDS THAT MODULATE HSP90 ACTIVITY |
| ***C 07D 249/14*** | EP 2342200* | COMPOUNDS WHICH SELECTIVELY MODULATE THE CB2 RECEPTOR |
| ***C 07D 249/18*** | EP 2326631* | MIF MODULATORS |
| ***C 07D 257/04*** | EP 2068869* | NOVEL IMIDAZOTHIAZOLES AND IMIDAZOXAZOLES |
| ***C 07D 261/02*** | EP 2331515* | INSCETICIDAL COMPOUNDS |
| ***C 07D 261/04*** | EP 2332927 | NITROGEN-CONTAINING HETEROCYCLIC COMPOUND AND PEST CONTROL AGENT |
| ***C 07D 261/14*** | EP 2342200* | COMPOUNDS WHICH SELECTIVELY MODULATE THE CB2 RECEPTOR |
| ***C 07D 263/32*** | EP 2251324 | HETEROARYL-ALKYLCARBAMATE COMPOUNDS AND THEIR USE AS INHIBITORS OF THE FAAH ENZYME |
| ***C 07D 263/56*** | EP 2326631* | MIF MODULATORS |
| ***C 07D 263/57*** | EP 2331534* | BENZOXAZOLES, BENZTHIAZOLES AND RELATED ANALOGS AS SIRTUIN MODULATORS |
| ***C 07D 265/30*** | EP 2329824 | NOVEL PHARMACEUTICAL COMPOSITION FOR TREATMENT OF NOCICEPTIVE PAIN |
| ***C 07D 265/30*** | EP 2330099 | NOVEL SALT OF MORPHOLINE DERIVATIVE |
| ***C 07D 265/36*** | EP 2328877* | 1,4-BENZOXAZINE COMPOUNDS AND DERIVATIVES THEREOF AS THERAPEUTIC DRUGS FOR THE TREATMENT OF NEURODEGENERATIVE CONDITIONS |
| ***C 07D 271/06*** | EP 2335701 | Heterocyclic aspartyl protease inhibitors |
| ***C 07D 271/06*** | EP 2343069 | Heterocyclic aspartyl protease inhibitors |
| ***C 07D 273/02*** | EP 2326631* | MIF MODULATORS |
| ***C 07D 277/42*** | EP 2323970* | CYCLOHEXYL AMIDE DERIVATIVES AND THEIR USE AS CRF-1 RECEPTOR ANTAGONISTS |
| ***C 07D 277/66*** | EP 2331534* | BENZOXAZOLES, BENZTHIAZOLES AND RELATED ANALOGS AS SIRTUIN MODULATORS |
| ***C 07D 279/16*** | EP 2328877* | 1,4-BENZOXAZINE COMPOUNDS AND DERIVATIVES THEREOF AS THERAPEUTIC DRUGS FOR THE TREATMENT OF NEURODEGENERATIVE CONDITIONS |
| ***C 07D 285/135*** | EP 2334670* | NEW 2-AMIDOTHIADIAZOLE DERIVATIVES |
| ***C 07D 307/78*** | EP 2328891* | NEW BENZOFURANS SUITABLE AS PRECURSORS TO COMPOUNDS THAT ARE USEFUL FOR IMAGING AMYLOID DEPOSITS |
| ***C 07D 309/08*** | EP 2324002* | PROCESSES FOR THE PREPARATION OF SGLT2 INHIBITORS |
| ***C 07D 309/10*** | EP 2324002* | PROCESSES FOR THE PREPARATION OF SGLT2 INHIBITORS |
| ***C 07D 311/22*** | EP 2342188* | CHROMENONE ANALOGS AS SIRTUIN MODULATORS |
| ***C 07D 319/18*** | EP 2328877* | 1,4-BENZOXAZINE COMPOUNDS AND DERIVATIVES THEREOF AS THERAPEUTIC DRUGS FOR THE TREATMENT OF NEURODEGENERATIVE CONDITIONS |
| ***C 07D 319/20*** | EP 2326635* | NOVEL SUBSTITUTED SULFAMIDE DERIVATIVES |
| ***C 07D 319/20*** | EP 2340246* | CRYSTALLINE FORM OF (2S)-(-)-N-(6-CHLORO-2,3-DIHYDRO-BENZO[1,4]DIOXIN-2-YLMETHYL)-SULFAMIDE |
| ***C 07D 333/38*** | EP 2324015* | THIOPHENE-2-CARBOXAMIDE DERIVATIVES, |

| (51) | Broj objave evropske prijave patenta | (51) |
|---|---|---|
| | | PREPARATION THEREOF AND THERAPEUTIC USE THEREOF |
| ***C 07D 335/04*** | EP 2328877* | 1,4-BENZOXAZINE COMPOUNDS AND DERIVATIVES THEREOF AS THERAPEUTIC DRUGS FOR THE TREATMENT OF NEURODEGENERATIVE CONDITIONS |
| ***C 07D 401/02*** | EP 2125777* | SPIRO SUBSTITUTED COMPOUNDS AS ANGIOGENESIS INHIBITORS |
| ***C 07D 401/04*** | EP 2253614 | Inhibitors of IAP |
| ***C 07D 401/04*** | EP 2323737* | TRIAZOLE COMPOUNDS THAT MODULATE HSP90 ACTIVITY |
| ***C 07D 401/04*** | EP 2323992* | 5-ALKYNYL-PYRIMIDINES |
| ***C 07D 401/04*** | EP 2324012* | NEW COMPOUNDS |
| ***C 07D 401/04*** | EP 2331522* | TETRAHYDROPYRIDINYL AND DIHYDROPYRROLYL COMPOUNDS AND THE USE THEREOF |
| ***C 07D 401/04*** | EP 2331523* | PYRIDINE AND PYRIMIDINE BASED COMPOUNDS AS WNT SIGNALING PATHWAY INHIBITORS FOR THE TREATMENT OF CANCER |
| ***C 07D 401/04*** | EP 2335701 | Heterocyclic aspartyl protease inhibitors |
| ***C 07D 401/04*** | EP 2343069 | Heterocyclic aspartyl protease inhibitors |
| ***C 07D 401/06*** | EP 2099760* | ANTIBACTERIAL QUINOLINE DERIVATIVES |
| ***C 07D 401/06*** | EP 2137152* | NOVEL BENZAMIDE DERIVATIVES AND PROCESS FOR THE PREPARATION THEREOF |
| ***C 07D 401/06*** | EP 2323992* | 5-ALKYNYL-PYRIMIDINES |
| ***C 07D 401/06*** | EP 2326625* | BENZAZEPINE DERIVATIVES AND THEIR USE AS HSTAMINE H3 ANTAGONISTS |
| ***C 07D 401/06*** | EP 2340021* | SUBSTITUTED PYRROLIDINE-2-CARBOXAMIDES |
| ***C 07D 401/06*** | EP 2342182* | ISOQUINOLINONE DERIVATIVES AS NK3 ANTAGONISTS |
| ***C 07D 401/10*** | EP 2099760* | ANTIBACTERIAL QUINOLINE DERIVATIVES |
| ***C 07D 401/10*** | EP 2323737* | TRIAZOLE COMPOUNDS THAT MODULATE HSP90 ACTIVITY |
| ***C 07D 401/10*** | EP 2335701 | Heterocyclic aspartyl protease inhibitors |
| ***C 07D 401/10*** | EP 2343069 | Heterocyclic aspartyl protease inhibitors |
| ***C 07D 401/12*** | EP 2137152* | NOVEL BENZAMIDE DERIVATIVES AND PROCESS FOR THE PREPARATION THEREOF |
| ***C 07D 401/12*** | EP 2253614 | Inhibitors of IAP |
| ***C 07D 401/12*** | EP 2326621* | SUBSTITUTED 1,2,3,4-TETRAHYDROCYCLOPENTA[b]INDOL-3-YL) ACETIC ACID DERIVATIVES USEFUL IN THE TREATMENT OF AUTOIMMUNE AND INFLAMMATORY DISORDERS |
| ***C 07D 401/12*** | EP 2326625* | BENZAZEPINE DERIVATIVES AND THEIR USE AS HSTAMINE H3 ANTAGONISTS |
| ***C 07D 401/12*** | EP 2328869* | HETEROARYL ANTAGONISTS OF PROSTAGLANDIN D2 RECEPTORS |
| ***C 07D 401/12*** | EP 2335701 | Heterocyclic aspartyl protease inhibitors |
| ***C 07D 401/12*** | EP 2340021* | SUBSTITUTED PYRROLIDINE-2-CARBOXAMIDES |
| ***C 07D 401/12*** | EP 2342194* | OXOAZETIDINE DERIVATIVES, PROCESS FOR THE PREPARATION THEREOF AND USE THEREOF IN HUMAN MEDICINE AND IN COSMETICS |
| ***C 07D 401/12*** | EP 2343069 | Heterocyclic aspartyl protease inhibitors |
| ***C 07D 401/14*** | EP 2323737* | TRIAZOLE COMPOUNDS THAT MODULATE HSP90 ACTIVITY |
| ***C 07D 401/14*** | EP 2326625* | BENZAZEPINE DERIVATIVES AND THEIR USE AS HSTAMINE H3 ANTAGONISTS |
| ***C 07D 401/14*** | EP 2331522* | TETRAHYDROPYRIDINYL AND DIHYDROPYRROLYL COMPOUNDS AND THE USE THEREOF |
| ***C 07D 401/14*** | EP 2331523* | PYRIDINE AND PYRIMIDINE BASED COMPOUNDS AS WNT SIGNALING PATHWAY INHIBITORS FOR THE TREATMENT OF CANCER |
| ***C 07D 401/14*** | EP 2335701 | Heterocyclic aspartyl protease inhibitors |
| ***C 07D 401/14*** | EP 2337781* | ANTI-VIRAL COMPOUNDS TO TREAT HCV INFECTION |
| ***C 07D 401/14*** | EP 2340021* | SUBSTITUTED PYRROLIDINE-2-CARBOXAMIDES |
| ***C 07D 401/14*** | EP 2343069 | Heterocyclic aspartyl protease inhibitors |

| (51) | Broj objave evropske prijave patenta | (51) |
|---|---|---|
| ***C 07D 403/00*** | EP 2114895* | TALARAZOLE METABOLITES |
| ***C 07D 403/00*** | EP 2324012* | NEW COMPOUNDS |
| ***C 07D 403/02*** | EP 2125777* | SPIRO SUBSTITUTED COMPOUNDS AS ANGIOGENESIS INHIBITORS |
| ***C 07D 403/04*** | EP 2253614 | Inhibitors of IAP |
| ***C 07D 403/04*** | EP 2323737* | TRIAZOLE COMPOUNDS THAT MODULATE HSP90 ACTIVITY |
| ***C 07D 403/04*** | EP 2324012* | NEW COMPOUNDS |
| ***C 07D 403/04*** | EP 2324013* | SUBSTITUTED-QUINOXALINE-TYPE BRIDGED-PIPERIDINE COMPOUNDS AND THE USES THEREOF |
| ***C 07D 403/06*** | EP 2323992* | 5-ALKYNYL-PYRIMIDINES |
| ***C 07D 403/06*** | EP 2335701 | Heterocyclic aspartyl protease inhibitors |
| ***C 07D 403/06*** | EP 2340021* | SUBSTITUTED PYRROLIDINE-2-CARBOXAMIDES |
| ***C 07D 403/06*** | EP 2342182* | ISOQUINOLINONE DERIVATIVES AS NK3 ANTAGONISTS |
| ***C 07D 403/06*** | EP 2343069 | Heterocyclic aspartyl protease inhibitors |
| ***C 07D 403/08*** | EP 2323737* | TRIAZOLE COMPOUNDS THAT MODULATE HSP90 ACTIVITY |
| ***C 07D 403/10*** | EP 2323737* | TRIAZOLE COMPOUNDS THAT MODULATE HSP90 ACTIVITY |
| ***C 07D 403/10*** | EP 2335701 | Heterocyclic aspartyl protease inhibitors |
| ***C 07D 403/10*** | EP 2343069 | Heterocyclic aspartyl protease inhibitors |
| ***C 07D 403/12*** | EP 2253614 | Inhibitors of IAP |
| ***C 07D 403/12*** | EP 2323737* | TRIAZOLE COMPOUNDS THAT MODULATE HSP90 ACTIVITY |
| ***C 07D 403/12*** | EP 2326621* | SUBSTITUTED 1,2,3,4-TETRAHYDROCYCLOPENTA[b]INDOL-3-YL) ACETIC ACID DERIVATIVES USEFUL IN THE TREATMENT OF AUTOIMMUNE AND INFLAMMATORY DISORDERS |
| ***C 07D 403/12*** | EP 2326625* | BENZAZEPINE DERIVATIVES AND THEIR USE AS HSTAMINE H3 ANTAGONISTS |
| ***C 07D 403/12*** | EP 2334646* | SUBSTITUTED BENZAMIDES AS CANNABINOID RECEPTOR LIGANDS |
| ***C 07D 403/12*** | EP 2340021* | SUBSTITUTED PYRROLIDINE-2-CARBOXAMIDES |
| ***C 07D 403/12*** | EP 2342194* | OXOAZETIDINE DERIVATIVES, PROCESS FOR THE PREPARATION THEREOF AND USE THEREOF IN HUMAN MEDICINE AND IN COSMETICS |
| ***C 07D 403/14*** | EP 2323737* | TRIAZOLE COMPOUNDS THAT MODULATE HSP90 ACTIVITY |
| ***C 07D 403/14*** | EP 2323992* | 5-ALKYNYL-PYRIMIDINES |
| ***C 07D 403/14*** | EP 2335701 | Heterocyclic aspartyl protease inhibitors |
| ***C 07D 403/14*** | EP 2337781* | ANTI-VIRAL COMPOUNDS TO TREAT HCV INFECTION |
| ***C 07D 403/14*** | EP 2343069 | Heterocyclic aspartyl protease inhibitors |
| ***C 07D 405/04*** | EP 2323737* | TRIAZOLE COMPOUNDS THAT MODULATE HSP90 ACTIVITY |
| ***C 07D 405/04*** | EP 2328891* | NEW BENZOFURANS SUITABLE AS PRECURSORS TO COMPOUNDS THAT ARE USEFUL FOR IMAGING AMYLOID DEPOSITS |
| ***C 07D 405/06*** | EP 2099760* | ANTIBACTERIAL QUINOLINE DERIVATIVES |
| ***C 07D 405/06*** | EP 2335701 | Heterocyclic aspartyl protease inhibitors |
| ***C 07D 405/06*** | EP 2340021* | SUBSTITUTED PYRROLIDINE-2-CARBOXAMIDES |
| ***C 07D 405/06*** | EP 2343069 | Heterocyclic aspartyl protease inhibitors |
| ***C 07D 405/10*** | EP 2099760* | ANTIBACTERIAL QUINOLINE DERIVATIVES |
| ***C 07D 405/12*** | EP 2253614 | Inhibitors of IAP |
| ***C 07D 405/12*** | EP 2326625* | BENZAZEPINE DERIVATIVES AND THEIR USE AS HSTAMINE H3 ANTAGONISTS |
| ***C 07D 405/12*** | EP 2334646* | SUBSTITUTED BENZAMIDES AS CANNABINOID RECEPTOR LIGANDS |
| ***C 07D 405/12*** | EP 2340021* | SUBSTITUTED PYRROLIDINE-2-CARBOXAMIDES |
| ***C 07D 405/12*** | EP 2342200* | COMPOUNDS WHICH SELECTIVELY MODULATE THE CB2 RECEPTOR |
| ***C 07D 405/14*** | EP 2326625* | BENZAZEPINE DERIVATIVES AND THEIR USE AS HSTAMINE H3 ANTAGONISTS |

| (51) | Broj objave evropske prijave patenta | (51) |
|---|---|---|
| ***C 07D 405/14*** | EP 2328893* | TRIAZOLE COMPOUNDS THAT MODULATE HSP90 ACTIVITY |
| ***C 07D 405/14*** | EP 2334646* | SUBSTITUTED BENZAMIDES AS CANNABINOID RECEPTOR LIGANDS |
| ***C 07D 405/14*** | EP 2334668* | PROCESS FOR PREPARING OLMESARTAN MEDOXOMIL INTERMEDIATE |
| ***C 07D 405/14*** | EP 2335701 | Heterocyclic aspartyl protease inhibitors |
| ***C 07D 405/14*** | EP 2343069 | Heterocyclic aspartyl protease inhibitors |
| ***C 07D 407/04*** | EP 2342182* | ISOQUINOLINONE DERIVATIVES AS NK3 ANTAGONISTS |
| ***C 07D 407/14*** | EP 2335701 | Heterocyclic aspartyl protease inhibitors |
| ***C 07D 407/14*** | EP 2343069 | Heterocyclic aspartyl protease inhibitors |
| ***C 07D 409/04*** | EP 2340021* | SUBSTITUTED PYRROLIDINE-2-CARBOXAMIDES |
| ***C 07D 409/06*** | EP 2099791* | THIENYL-CONTAINING GLYCOPYRANOSYL DERIVATIVES AS ANTIDIABETICS |
| ***C 07D 409/06*** | EP 2323992* | 5-ALKYNYL-PYRIMIDINES |
| ***C 07D 409/06*** | EP 2324015* | THIOPHENE-2-CARBOXAMIDE DERIVATIVES, PREPARATION THEREOF AND THERAPEUTIC USE THEREOF |
| ***C 07D 409/06*** | EP 2335701 | Heterocyclic aspartyl protease inhibitors |
| ***C 07D 409/06*** | EP 2343069 | Heterocyclic aspartyl protease inhibitors |
| ***C 07D 409/10*** | EP 2099760* | ANTIBACTERIAL QUINOLINE DERIVATIVES |
| ***C 07D 409/12*** | EP 2253614 | Inhibitors of IAP |
| ***C 07D 409/12*** | EP 2326625* | BENZAZEPINE DERIVATIVES AND THEIR USE AS HSTAMINE H3 ANTAGONISTS |
| ***C 07D 409/12*** | EP 2340021* | SUBSTITUTED PYRROLIDINE-2-CARBOXAMIDES |
| ***C 07D 409/14*** | EP 2324015* | THIOPHENE-2-CARBOXAMIDE DERIVATIVES, PREPARATION THEREOF AND THERAPEUTIC USE THEREOF |
| ***C 07D 409/14*** | EP 2326625* | BENZAZEPINE DERIVATIVES AND THEIR USE AS HSTAMINE H3 ANTAGONISTS |
| ***C 07D 409/14*** | EP 2331522* | TETRAHYDROPYRIDINYL AND DIHYDROPYRROLYL COMPOUNDS AND THE USE THEREOF |
| ***C 07D 409/14*** | EP 2331523* | PYRIDINE AND PYRIMIDINE BASED COMPOUNDS AS WNT SIGNALING PATHWAY INHIBITORS FOR THE TREATMENT OF CANCER |
| ***C 07D 409/14*** | EP 2334646* | SUBSTITUTED BENZAMIDES AS CANNABINOID RECEPTOR LIGANDS |
| ***C 07D 413/04*** | EP 2069284* | PROCESS AND INTERMEDIATES FOR THE SYNTHESIS OF 2-(QUINOLIN-5-YL)-4,5 DISUBSTITUTED-AZOLE DERIVATIVES |
| ***C 07D 413/04*** | EP 2253614 | Inhibitors of IAP |
| ***C 07D 413/04*** | EP 2331522* | TETRAHYDROPYRIDINYL AND DIHYDROPYRROLYL COMPOUNDS AND THE USE THEREOF |
| ***C 07D 413/04*** | EP 2332927 | NITROGEN-CONTAINING HETEROCYCLIC COMPOUND AND PEST CONTROL AGENT |
| ***C 07D 413/04*** | EP 2342200* | COMPOUNDS WHICH SELECTIVELY MODULATE THE CB2 RECEPTOR |
| ***C 07D 413/06*** | EP 2332927 | NITROGEN-CONTAINING HETEROCYCLIC COMPOUND AND PEST CONTROL AGENT |
| ***C 07D 413/10*** | EP 2324017* | INHIBITORS OF 11beta-HYDROXYSTEROID DEHYDROGENASE 1 |
| ***C 07D 413/10*** | EP 2324018* | CYCLIC INHIBITORS OF 11 BETA-HYDROXYSTEROID DEHYDROGENASE 1 |
| ***C 07D 413/10*** | EP 2328893* | TRIAZOLE COMPOUNDS THAT MODULATE HSP90 ACTIVITY |
| ***C 07D 413/10*** | EP 2332927 | NITROGEN-CONTAINING HETEROCYCLIC COMPOUND AND PEST CONTROL AGENT |
| ***C 07D 413/12*** | EP 2326625* | BENZAZEPINE DERIVATIVES AND THEIR USE AS HSTAMINE H3 ANTAGONISTS |
| ***C 07D 413/12*** | EP 2331515* | INSCETICIDAL COMPOUNDS |
| ***C 07D 413/12*** | EP 2331534* | BENZOXAZOLES, BENZTHIAZOLES AND RELATED ANALOGS AS SIRTUIN MODULATORS |

| (51) | Broj objave evropske prijave patenta | (51) |
|---|---|---|
| ***C 07D 413/12*** | EP 2331535* | INSECTICIDAL COMPOUNDS |
| ***C 07D 413/12*** | EP 2334646* | SUBSTITUTED BENZAMIDES AS CANNABINOID RECEPTOR LIGANDS |
| ***C 07D 413/12*** | EP 2335701 | Heterocyclic aspartyl protease inhibitors |
| ***C 07D 413/12*** | EP 2340021* | SUBSTITUTED PYRROLIDINE-2-CARBOXAMIDES |
| ***C 07D 413/12*** | EP 2342200* | COMPOUNDS WHICH SELECTIVELY MODULATE THE CB2 RECEPTOR |
| ***C 07D 413/12*** | EP 2343069 | Heterocyclic aspartyl protease inhibitors |
| ***C 07D 413/14*** | EP 2069284* | PROCESS AND INTERMEDIATES FOR THE SYNTHESIS OF 2-(QUINOLIN-5-YL)-4,5 DISUBSTITUTED-AZOLE DERIVATIVES |
| ***C 07D 413/14*** | EP 2253614 | Inhibitors of IAP |
| ***C 07D 413/14*** | EP 2323992* | 5-ALKYNYL-PYRIMIDINES |
| ***C 07D 413/14*** | EP 2324017* | INHIBITORS OF 11beta-HYDROXYSTEROID DEHYDROGENASE 1 |
| ***C 07D 413/14*** | EP 2324018* | CYCLIC INHIBITORS OF 11 BETA-HYDROXYSTEROID DEHYDROGENASE 1 |
| ***C 07D 413/14*** | EP 2331522* | TETRAHYDROPYRIDINYL AND DIHYDROPYRROLYL COMPOUNDS AND THE USE THEREOF |
| ***C 07D 413/14*** | EP 2331523* | PYRIDINE AND PYRIMIDINE BASED COMPOUNDS AS WNT SIGNALING PATHWAY INHIBITORS FOR THE TREATMENT OF CANCER |
| ***C 07D 413/14*** | EP 2334646* | SUBSTITUTED BENZAMIDES AS CANNABINOID RECEPTOR LIGANDS |
| ***C 07D 413/14*** | EP 2335701 | Heterocyclic aspartyl protease inhibitors |
| ***C 07D 413/14*** | EP 2342200* | COMPOUNDS WHICH SELECTIVELY MODULATE THE CB2 RECEPTOR |
| ***C 07D 413/14*** | EP 2343069 | Heterocyclic aspartyl protease inhibitors |
| ***C 07D 417/04*** | EP 2253614 | Inhibitors of IAP |
| ***C 07D 417/04*** | EP 2334670* | NEW 2-AMIDOTHIADIAZOLE DERIVATIVES |
| ***C 07D 417/06*** | EP 2324015* | THIOPHENE-2-CARBOXAMIDE DERIVATIVES, PREPARATION THEREOF AND THERAPEUTIC USE THEREOF |
| ***C 07D 417/12*** | EP 2137152* | NOVEL BENZAMIDE DERIVATIVES AND PROCESS FOR THE PREPARATION THEREOF |
| ***C 07D 417/12*** | EP 2326621* | SUBSTITUTED 1,2,3,4-TETRAHYDROCYCLOPENTA[b]INDOL-3-YL) ACETIC ACID DERIVATIVES USEFUL IN THE TREATMENT OF AUTOIMMUNE AND INFLAMMATORY DISORDERS |
| ***C 07D 417/12*** | EP 2326625* | BENZAZEPINE DERIVATIVES AND THEIR USE AS HSTAMINE H3 ANTAGONISTS |
| ***C 07D 417/12*** | EP 2331534* | BENZOXAZOLES, BENZTHIAZOLES AND RELATED ANALOGS AS SIRTUIN MODULATORS |
| ***C 07D 417/12*** | EP 2335701 | Heterocyclic aspartyl protease inhibitors |
| ***C 07D 417/12*** | EP 2340021* | SUBSTITUTED PYRROLIDINE-2-CARBOXAMIDES |
| ***C 07D 417/12*** | EP 2343069 | Heterocyclic aspartyl protease inhibitors |
| ***C 07D 417/14*** | EP 2324015* | THIOPHENE-2-CARBOXAMIDE DERIVATIVES, PREPARATION THEREOF AND THERAPEUTIC USE THEREOF |
| ***C 07D 417/14*** | EP 2331523* | PYRIDINE AND PYRIMIDINE BASED COMPOUNDS AS WNT SIGNALING PATHWAY INHIBITORS FOR THE TREATMENT OF CANCER |
| ***C 07D 417/14*** | EP 2331538* | CRYSTALLINE FORMS OF A 2-THIAZOLYL- 4-QUINOLINYL-OXY DERIVATIVE, A POTENT HCV INHIBITOR |
| ***C 07D 417/14*** | EP 2337781* | ANTI-VIRAL COMPOUNDS TO TREAT HCV INFECTION |
| ***C 07D 451/02*** | EP 2331522* | TETRAHYDROPYRIDINYL AND DIHYDROPYRROLYL COMPOUNDS AND THE USE THEREOF |
| ***C 07D 471/04*** | EP 2121687* | TRICYCLIC AMINE DERIVATIVES AS PROTEIN TYROSINE KINASE INHIBITORS |
| ***C 07D 471/04*** | EP 2251324 | HETEROARYL-ALKYLCARBAMATE COMPOUNDS AND THEIR USE AS INHIBITORS OF THE FAAH ENZYME |

| (51) | Broj objave evropske prijave patenta | (51) |
|---|---|---|
| ***C 07D 471/04*** | EP 2253614 | Inhibitors of IAP |
| ***C 07D 471/04*** | EP 2334673* | PYRIDO[3,2-d]PYRIDAZINE-2(1H)-ONE COMPOUNDS AS P38 MODULATORS AND METHODS OF USE THEREOF |
| ***C 07D 471/04*** | EP 2334674* | PYRIDAZINO- PYRIDINONE COMPOUNDS FOR THE TREATMENT OF PROTEIN KINASE MEDIATED DISEASES. |
| ***C 07D 471/04*** | EP 2334677* | TRIAZOLOPYRIDINE COMPOUNDS AS PIM KINASE INHIBITORS |
| ***C 07D 471/04*** | EP 2342203* | PYRAZOLO PYRIDINE DERIVATIVES AS NADPH OXIDASE INHIBITORS |
| ***C 07D 471/10*** | EP 2331523* | PYRIDINE AND PYRIMIDINE BASED COMPOUNDS AS WNT SIGNALING PATHWAY INHIBITORS FOR THE TREATMENT OF CANCER |
| ***C 07D 471/14*** | EP 2324024* | DIAZACARBAZOLES AND METHODS OF USE |
| ***C 07D 471/18*** | EP 2069346* | ACETAMIDE AND CARBOXAMIDE DERIVATIVES OF AZAADAMANTANE AND METHODS OF USE THEREOF |
| ***C 07D 473/16*** | EP 2324025* | PURINE DERIVATIVES FOR USE IN THE TREATMENT OF ALLERGIC, INFLAMMATORY AND INFECTIOUS DISEASES |
| ***C 07D 473/16*** | EP 2324026* | PURINE DERIVATIVES FOR USE IN THE TREATMENT OF ALLERGIC, INFLAMMATORY AND INFECTIOUS DISEASES |
| ***C 07D 473/18*** | EP 2324025* | PURINE DERIVATIVES FOR USE IN THE TREATMENT OF ALLERGIC, INFLAMMATORY AND INFECTIOUS DISEASES |
| ***C 07D 473/18*** | EP 2324026* | PURINE DERIVATIVES FOR USE IN THE TREATMENT OF ALLERGIC, INFLAMMATORY AND INFECTIOUS DISEASES |
| ***C 07D 487/04*** | EP 2081937* | TRIAZOLOPYRIDAZINE PROTEIN KINASE MODULATORS |
| ***C 07D 487/04*** | EP 2086981* | COMPOUNDS FOR INHIBITING MITOTIC PROGRESSION |
| ***C 07D 487/04*** | EP 2121687* | TRICYCLIC AMINE DERIVATIVES AS PROTEIN TYROSINE KINASE INHIBITORS |
| ***C 07D 487/04*** | EP 2253614 | Inhibitors of IAP |
| ***C 07D 487/04*** | EP 2324028* | THERAPEUTIC AGENTS 414 |
| ***C 07D 487/04*** | EP 2331545* | IMPROVED PROCESS FOR PREPARATION OF (2R)-4-OXO-4-[3- (TRIFLUOROMETHYL)-5,6-DIHYDRO [1,2,4]-TRIAZOLO[4,3-A]PYRAZIN- 7(8H)-YL]-L-(2,4,5-TRIFLUOROPHENYL)BUTAN-2-AMINE&NEW IMPURITIES IN PREPARATION THEREOF |
| ***C 07D 487/04*** | EP 2331546* | 2-ALKYL-6-CYCLOAMINO-3-(PYRIDIN-4-YL)IMIDAZO[1,2-IB]-PYRIDAZINE DERIVATIVES, PREPARATION THEREOF, AND THERAPEUTIC APPLICATION THEREOF |
| ***C 07D 487/04*** | EP 2331547* | PYRROLOPYRIMIDINE COMPOUNDS AS CDK INHIBITORS |
| ***C 07D 487/04*** | EP 2334684* | PYRAZOLOPYRIMIDINES AND THEIR USE FOR THE TREATMENT OF CNS DISORDERS |
| ***C 07D 487/04*** | EP 2342205* | SUBSTITUTED TRICYCLIC ACID DERIVATIVES AS S1P1 RECEPTOR AGONISTS USEFUL IN THE TREATMENT OF AUTOIMMUNE AND INFLAMMATORY DISORDERS |
| ***C 07D 489/02*** | EP 2328900* | PROCESS FOR MAKING MORPHINAN-6 alpha-OLS |
| ***C 07D 489/08*** | EP 2328900* | PROCESS FOR MAKING MORPHINAN-6 alpha-OLS |
| ***C 07D 489/12*** | EP 2326651* | BUPRENORPHINE ANALOGS |
| ***C 07D 491/04*** | EP 2324031* | NITROGENATED DERIVATIVES OF PANCRATISTATIN |
| ***C 07D 491/048*** | EP 2069354* | Aza-benzofuranyl compounds and methods of use |
| ***C 07D 491/048*** | EP 2331548* | PROTEASE INHIBITORS |
| ***C 07D 493/04*** | EP 2326653* | NEW (POLY)AMINOALKYLAMINOALKYLAMIDE, ALKYL-UREA, OR ALKYL-SULFONAMIDE DERIVATIVES OF EPIPODOPHYLLOTOXIN, A PROCESS FOR PREPARING THEM, AND APPLICATION THEREOF IN THERAPY AS ANTICANCER AGENTS |
| ***C 07D 493/10*** | EP 2334687* | DIOXA-BICYCLO[3.2.1.]OCTANE-2,3,4-TRIOL DERIVATIVES |
| ***C 07D 493/18*** | EP 2331549* | METHOD FOR PREPARING 1,6:2,3-DIANHYDRO-BETA-D-MANNOPYRANOSE |

| (51) | Broj objave evropske prijave patenta | (51) |
|---|---|---|
| ***C 07D 493/18*** | EP 2331550* | SHORT SYNTHETIC PATHWAY FOR 1,6:2,3-DIANHYDRO-BETA-D-MANNOPYRANOSE |
| ***C 07D 498/04*** | EP 2328902* | PYRAZOLO [5,1-B]OXAZOLE DERIVATIVES AS CRF1 ANTAGONISTS |
| ***C 07D 498/10*** | EP 2328903* | SPIRO-TETRACYCLIC RING COMPOUNDS AS BETASECRETASE MODULATORS AND METHODS OF USE |
| ***C 07D 498/22*** | EP 2327706 | Polymorphous forms III and IV of N-benzoyl-staurosporine |
| ***C 07D 501/46*** | EP 2341053 | CEPHALOSPORIN HAVING CATECHOL GROUP |
| ***C 07D 505/24*** | EP 2341053 | CEPHALOSPORIN HAVING CATECHOL GROUP |
| ***C 07D 513/04*** | EP 2332943 | NOVEL FUSED AMINODIHYDROTHIAZINE DERIVATIVE |
| ***C 07D 513/10*** | EP 2328903* | SPIRO-TETRACYCLIC RING COMPOUNDS AS BETASECRETASE MODULATORS AND METHODS OF USE |
| ***C 07D 519/00*** | EP 2081937* | TRIAZOLOPYRIDAZINE PROTEIN KINASE MODULATORS |
| ***C 07D 519/06*** | EP 2341053 | CEPHALOSPORIN HAVING CATECHOL GROUP |
| ***C 07F 5/02*** | EP 2061474* | SOLID CITRATE AND TARTRATE SALTS OF DPP-IV INHIBITORS |
| ***C 07F 9/09*** | EP 2058317 | AMINOPHOSPHORIC ACID ESTER DERIVATIVE AND S1P RECEPTOR MODULATOR CONTAINING THE SAME AS ACTIVE INGREDIENT |
| ***C 07F 9/6561*** | EP 2256124 | Phospho-indoles as HIV inhibitors |
| ***C 07H 7/04*** | WO 2010043682 | PROCESS FOR THE PREPARATION OF COMPOUNDS USEFUL AS INHIBITORS OF SGLT |
| ***C 07H 13/04*** | WO 2010043682 | PROCESS FOR THE PREPARATION OF COMPOUNDS USEFUL AS INHIBITORS OF SGLT |
| ***C 07H 15/18*** | EP 2334687* | DIOXA-BICYCLO[3.2.1.]OCTANE-2,3,4-TRIOL DERIVATIVES |
| ***C 07H 19/01*** | EP 2331549* | METHOD FOR PREPARING 1,6:2,3-DIANHYDRO-BETA-D-MANNOPYRANOSE |
| ***C 07H 19/01*** | EP 2331550* | SHORT SYNTHETIC PATHWAY FOR 1,6:2,3-DIANHYDRO-BETA-D-MANNOPYRANOSE |
| ***C 07H 21/00*** | EP 2326730* | MICRO RNA (MIRNA) AND NEUROFIBROMATOSIS TYPE 1 : A ROLE IN DIAGNOSIS AND THERAPY |
| ***C 07H 21/00*** | EP 2334695* | THERAPEUTIC RIBONUCLEASES |
| ***C 07H 21/00*** | EP 2340256* | IMPROVED ANTIBODY LIBRARIES |
| ***C 07K 1/13*** | EP 2326955* | METHOD FOR MARKING AND/OR IDENTIFYING BIOMOLECULES |
| ***C 07K 1/14*** | EP 2323499* | PRODUCTION OF CANOLA PROTEIN ISOLATE WITHOUT HEAT TREATMENT |
| ***C 07K 5/00*** | EP 2125869* | SUBSTANCE P AND ANALOGS THEREOF AS AN IMMUNOGENIC COMPOSITION ADJUVANT |
| ***C 07K 5/10*** | EP 2340048* | POLYMER CONJUGATES OF BIPHALIN PEPTIDES |
| ***C 07K 7/02*** | EP 2340048* | POLYMER CONJUGATES OF BIPHALIN PEPTIDES |
| ***C 07K 7/06*** | EP 2334326* | MIMOTOPES OF ALPHA-SYNUCLEIN AND VACCINES THEREOF FOR THE TREATMENT OF NEURODEGENERATIVE DISORDERS |
| ***C 07K 7/06*** | EP 2334337* | POLYMER CONJUGATES OF OPIOID GROWTH FACTOR PEPTIDES |
| ***C 07K 7/06*** | EP 2342220* | METHODS AND SYSTEMS FOR PREDICTING MISFOLDED PROTEIN EPITOPES |
| ***C 07K 7/08*** | EP 2331564* | METHODS OF TREATING INFLAMMATION |
| ***C 07K 7/08*** | EP 2340045* | POLYMER CONJUGATES OF PROTEGRIN PEPTIDES |
| ***C 07K 14/00*** | EP 2331564* | METHODS OF TREATING INFLAMMATION |
| ***C 07K 14/00*** | EP 2342220* | METHODS AND SYSTEMS FOR PREDICTING MISFOLDED PROTEIN EPITOPES |
| ***C 07K 14/135*** | EP 2324062* | CHIMERIC RESPIRATORY SYNCYTIAL VIRUS POLYPEPTIDE ANTIGENS |
| ***C 07K 14/22*** | EP 2331121* | VACCINE COMPRISING PROTEIN NMBO964 FROM MEISSERIA MENINGITIDIS |
| ***C 07K 14/26*** | EP 2338902 | Klebsiella antigens |
| ***C 07K 14/33*** | EP 2337790* | CLOSTRIDIAL NEUROTOXINS WITH ALTERED PERSISTENCY |
| ***C 07K 14/415*** | EP 2323499* | PRODUCTION OF CANOLA PROTEIN ISOLATE WITHOUT |

| (51) | Broj objave evropske prijave patenta | (51) |
|---|---|---|
| | | HEAT TREATMENT |
| ***C 07K 14/435*** | EP 2334695* | THERAPEUTIC RIBONUCLEASES |
| ***C 07K 14/435*** | EP 2340046* | POLYMER CONJUGATES OF ZICONOTIDE PEPTIDES |
| ***C 07K 14/46*** | EP 2328922* | ANALOGUES OF GLUCOSE-DEPENDENT INSULINOTROPIC POLYPEPTIDE |
| ***C 07K 14/47*** | EP 2113513 | Metastin derivatives and use thereof |
| ***C 07K 14/47*** | EP 2138509 | Tumor-associated peptide binding promiscuously to human leukocyte antigen (HLA) class II molecules |
| ***C 07K 14/47*** | EP 2324055* | PD-1 ANTAGONISTS AND METHODS OF USE THEREOF |
| ***C 07K 14/47*** | EP 2334333* | POLYMER CONJUGATES OF V681-LIKE PEPTIDES |
| ***C 07K 14/47*** | EP 2338907 | Novel immunogenic epitopes for immunotherapy |
| ***C 07K 14/47*** | EP 2340047* | POLYMER CONJUGATES OF KISS1 PEPTIDES |
| ***C 07K 14/47*** | EP 2342220* | METHODS AND SYSTEMS FOR PREDICTING MISFOLDED PROTEIN EPITOPES |
| ***C 07K 14/505*** | EP 2342223* | MODIFIED ANIMAL ERYTHROPOIETIN POLYPEPTIDES AND THEIR USES |
| ***C 07K 14/52*** | EP 2331568* | TREATING INFLAMMATORY CONDITIONS |
| ***C 07K 14/54*** | EP 2256203 | IL-23 and its receptor; related reagents and methods |
| ***C 07K 14/54*** | EP 2325201 | Use of il-6-type Cytokines for maturation of Oocytes |
| ***C 07K 14/575*** | EP 2334335* | POLYMER CONJUGATES OF CD-NP PEPTIDES |
| ***C 07K 14/575*** | EP 2334336* | POLYMER CONJUGATES OF OSTEOCALCIN PEPTIDES |
| ***C 07K 14/605*** | EP 2337585* | POLYMER CONJUGATES OF GLP-2-LIKE PEPTIDES |
| ***C 07K 14/61*** | EP 2340050* | POLYMER CONJUGATES OF AOD-LIKE PEPTIDES |
| ***C 07K 14/62*** | EP 2328922* | ANALOGUES OF GLUCOSE-DEPENDENT INSULINOTROPIC POLYPEPTIDE |
| ***C 07K 14/62*** | EP 2334338* | POLYMER CONJUGATES OF C-PEPTIDES |
| ***C 07K 14/715*** | EP 2256203 | IL-23 and its receptor; related reagents and methods |
| ***C 07K 14/715*** | EP 2294083* | EPITOPES OF IL-17A AND IL-17F AND ANTIBODIES SPECIFIC THERETO |
| ***C 07K 14/745*** | EP 2331569* | RECOMBINANTLY PRODUCED HUMAN FACTOR VIII AND IX |
| ***C 07K 14/755*** | EP 2331569* | RECOMBINANTLY PRODUCED HUMAN FACTOR VIII AND IX |
| ***C 07K 14/78*** | EP 2076279* | NATIVE (TELOPEPTIDE) PLACENTAL COLLAGEN COMPOSITIONS |
| ***C 07K 16/00*** | EP 2331571* | NMDA RECEPTOR MODULATORS AND USES THEREOF |
| ***C 07K 16/00*** | EP 2342220* | METHODS AND SYSTEMS FOR PREDICTING MISFOLDED PROTEIN EPITOPES |
| ***C 07K 16/10*** | EP 2331573* | HEPATITIS C ANTIBODIES AND USES THEREOF |
| ***C 07K 16/12*** | EP 2338902 | Klebsiella antigens |
| ***C 07K 16/18*** | EP 2119777 | GABA NEURON PROGENITOR CELL MARKER 65B13 |
| ***C 07K 16/18*** | EP 2238986 | Sp35 antibodies and uses thereof |
| ***C 07K 16/18*** | EP 2325208 | Polyubiquitin antibodies |
| ***C 07K 16/18*** | EP 2328616* | COMPOSITIONS AND METHODS FOR ANTIBODIES TARGETING COMPLEMENT PROTEIN C5 |
| ***C 07K 16/18*** | EP 2334705* | BIOLOGICAL PRODUCTS |
| ***C 07K 16/18*** | EP 2342220* | METHODS AND SYSTEMS FOR PREDICTING MISFOLDED PROTEIN EPITOPES |
| ***C 07K 16/24*** | EP 2334705* | BIOLOGICAL PRODUCTS |
| ***C 07K 16/26*** | EP 2328931* | ANTI-HEPCIDIN-25 SELECTIVE ANTIBODIES AND USES THEREOF |
| ***C 07K 16/28*** | EP 2104513* | OVR110 ANTIBODY COMPOSITIONS AND METHODS OF USE |
| ***C 07K 16/28*** | EP 2238986 | Sp35 antibodies and uses thereof |
| ***C 07K 16/28*** | EP 2241577 | Anti-CD37 antibodies |
| ***C 07K 16/28*** | EP 2334705* | BIOLOGICAL PRODUCTS |
| ***C 07K 16/28*** | EP 2342227* | TREATMENT OF ACUTE LYMPHOBLASTIC LEUKEMIA |
| ***C 07K 16/28*** | EP 2342228* | PD-1 SPECIFIC ANTIBODIES AND USES THEREOF |
| ***C 07K 16/28*** | EP 2342231* | BISPECIFIC ANTI-EGFR/ANTI-IGF-1R ANTIBODIES |
| ***C 07K 16/28*** | EP 2342233* | ANTI CXCR4 ANTIBODIES AND THEIR USE FOR THE TREATMENT OF CANCER |
| ***C 07K 16/30*** | EP 2342234* | MONOCLONAL ANTIBODIES FOR TREATMENT OF |

| (51) | Broj objave evropske prijave patenta | (51) |
|---|---|---|
| | | CANCER |
| ***C 07K 16/46*** | EP 2104513* | OVR110 ANTIBODY COMPOSITIONS AND METHODS OF USE |
| ***C 07K 16/46*** | EP 2334705* | BIOLOGICAL PRODUCTS |
| ***C 07K 16/46*** | EP 2341933* | LIPIDATED IMIDAZOQUINOLINE DERIVATIVES |
| ***C 07K 16/46*** | EP 2342227* | TREATMENT OF ACUTE LYMPHOBLASTIC LEUKEMIA |
| ***C 07K 16/46*** | EP 2342231* | BISPECIFIC ANTI-EGFR/ANTI-IGF-1R ANTIBODIES |
| ***C 07K 19/00*** | EP 2324062* | CHIMERIC RESPIRATORY SYNCYTIAL VIRUS POLYPEPTIDE ANTIGENS |
| ***C 08F 4/48*** | EP 2338919 | MODIFIED CONJUGATED DIENE POLYMER, METHOD FOR PRODUCING THE SAME, MODIFIED CONJUGATED DIENE POLYMER COMPOSITION, AND TIRE |
| ***C 08F 8/12*** | EP 2331587* | VINYL ALCOHOL CO-POLYMER CRYOGELS, VINYL ALCOHOL CO-POLYMERS, AND METHODS AND PRODUCTS THEREOF |
| ***C 08F 8/42*** | EP 2338919 | MODIFIED CONJUGATED DIENE POLYMER, METHOD FOR PRODUCING THE SAME, MODIFIED CONJUGATED DIENE POLYMER COMPOSITION, AND TIRE |
| ***C 08F 36/04*** | EP 2338919 | MODIFIED CONJUGATED DIENE POLYMER, METHOD FOR PRODUCING THE SAME, MODIFIED CONJUGATED DIENE POLYMER COMPOSITION, AND TIRE |
| ***C 08F 218/08*** | EP 2331587* | VINYL ALCOHOL CO-POLYMER CRYOGELS, VINYL ALCOHOL CO-POLYMERS, AND METHODS AND PRODUCTS THEREOF |
| ***C 08J 3/12*** | EP 2331629* | STARCH-BASED MICROPARTICLES FOR THE RELEASE OF AGENTS DISPOSED THEREIN |
| ***C 08J 3/20*** | EP 2331629* | STARCH-BASED MICROPARTICLES FOR THE RELEASE OF AGENTS DISPOSED THEREIN |
| ***C 08K 3/04*** | EP 2338919 | MODIFIED CONJUGATED DIENE POLYMER, METHOD FOR PRODUCING THE SAME, MODIFIED CONJUGATED DIENE POLYMER COMPOSITION, AND TIRE |
| ***C 08K 3/36*** | EP 2338919 | MODIFIED CONJUGATED DIENE POLYMER, METHOD FOR PRODUCING THE SAME, MODIFIED CONJUGATED DIENE POLYMER COMPOSITION, AND TIRE |
| ***C 08K 5/09*** | EP 2341106 | CURABLE COMPOSITION AND CURED PRODUCT THEREOF |
| ***C 08K 5/17*** | EP 2341106 | CURABLE COMPOSITION AND CURED PRODUCT THEREOF |
| ***C 08K 5/521*** | EP 2341106 | CURABLE COMPOSITION AND CURED PRODUCT THEREOF |
| ***C 08L 3/02*** | EP 2331629* | STARCH-BASED MICROPARTICLES FOR THE RELEASE OF AGENTS DISPOSED THEREIN |
| ***C 08L 15/00*** | EP 2338919 | MODIFIED CONJUGATED DIENE POLYMER, METHOD FOR PRODUCING THE SAME, MODIFIED CONJUGATED DIENE POLYMER COMPOSITION, AND TIRE |
| ***C 08L 23/00*** | EP 2334732* | RANDOM COPOLYMER WITH ENHANCED ETHYLENE CONTENT |
| ***C 08L 23/04*** | EP 2334732* | RANDOM COPOLYMER WITH ENHANCED ETHYLENE CONTENT |
| ***C 08L 95/00*** | EP 2334873* | BITUMINOUS COATING WITH GREAT ACOUSTIC PERFORMANCE |
| ***C 08L 101/10*** | EP 2341106 | CURABLE COMPOSITION AND CURED PRODUCT THEREOF |
| ***C 09B 29/36*** | EP 2251387 | Acidic azo dyes |
| ***C 09B 35/031*** | EP 2251387 | Acidic azo dyes |
| ***C 09D 5/33*** | EP 2342292* | RETROREFLECTIVE COATING AND METHOD FOR APPLYING A RETROREFLECTIVE COATING ON A STRUCTURE |
| ***C 09D 7/12*** | EP 2342292* | RETROREFLECTIVE COATING AND METHOD FOR APPLYING A RETROREFLECTIVE COATING ON A STRUCTURE |
| ***C 09D 11/00*** | EP 2251387 | Acidic azo dyes |

| (51) | Broj objave evropske prijave patenta | (51) |
|---|---|---|
| ***C 09J 7/00*** | EP 2333609 | Photosensitive adhesive composition, and obtained using the same, adhesive film, adhesive sheet, semiconductor wafer with adhesive layer, semiconductor device and electronic part |
| ***C 09J 7/00*** | EP 2334744* | GLUE LINE MATERIAL FOR WOOD BOARD AND WOOD BOARD |
| ***C 09J 9/02*** | EP 2339695 | Circuit connecting material, connection structure for circuit member using the same and production method thereof |
| ***C 09J 11/08*** | EP 2339695 | Circuit connecting material, connection structure for circuit member using the same and production method thereof |
| ***C 09J 123/26*** | EP 2334744* | GLUE LINE MATERIAL FOR WOOD BOARD AND WOOD BOARD |
| ***C 09J 151/06*** | EP 2334744* | GLUE LINE MATERIAL FOR WOOD BOARD AND WOOD BOARD |
| ***C 09J 179/08*** | EP 2333609 | Photosensitive adhesive composition, and obtained using the same, adhesive film, adhesive sheet, semiconductor wafer with adhesive layer, semiconductor device and electronic part |
| ***C 09J 201/00*** | EP 2339695 | Circuit connecting material, connection structure for circuit member using the same and production method thereof |
| ***C 09J 201/10*** | EP 2341106 | CURABLE COMPOSITION AND CURED PRODUCT THEREOF |
| ***C 09K 3/10*** | EP 2341106 | CURABLE COMPOSITION AND CURED PRODUCT THEREOF |
| ***C 09K 8/00*** | EP 2334898* | PROCESS FOR GENERATING HYDROGEN |
| ***C 09K 11/77*** | EP 2326955* | METHOD FOR MARKING AND/OR IDENTIFYING BIOMOLECULES |
| ***C 10G 1/02*** | EP 2324099* | METHOD FOR EXTRACTING FUELS AND PROPELLANTS |
| ***C 10G 2/00*** | EP 2336269 | SYSTEM FOR SEPARATING CATALYST |
| ***C 10G 2/00*** | EP 2336270 | METHOD FOR SYNTHESIZING LIQUID FUEL AND APPARATUS FOR SYNTHESIZING LIQUID FUEL |
| ***C 10G 2/00*** | EP 2336271 | UNIT FOR HYDROCARBON COMPOUND SYNTHESIS REACTION AND METHOD OF OPERATING SAME |
| ***C 10G 3/00*** | EP 2324099* | METHOD FOR EXTRACTING FUELS AND PROPELLANTS |
| ***C 10G 9/00*** | EP 2324099* | METHOD FOR EXTRACTING FUELS AND PROPELLANTS |
| ***C 10G 47/00*** | EP 2334898* | PROCESS FOR GENERATING HYDROGEN |
| ***C 10J 3/22*** | EP 2334762* | METHOD AND SYSTEM FOR PRODUCTION OF A CLEAN HOT GAS BASED ON SOLID FUELS |
| ***C 10L 1/10*** | EP 2084249* | FUEL COMPOSITIONS COMPRISING FARNESANE AND FARNESANE DERIVATIVES AND METHOD OF MAKING AND USING SAME |
| ***C 10L 1/16*** | EP 2084249* | FUEL COMPOSITIONS COMPRISING FARNESANE AND FARNESANE DERIVATIVES AND METHOD OF MAKING AND USING SAME |
| ***C 10L 1/18*** | EP 2099883* | JET FUEL COMPOSITIONS AND METHODS OF MAKING AND USING SAME |
| ***C 10L 1/18*** | EP 2099884* | JET FUEL COMPOSITIONS AND METHODS OF MAKING AND USING SAME |
| ***C 10L 5/08*** | EP 2275521 | Moulded body comprising brown coal |
| ***C 11D 3/37*** | EP 2337840* | LAUNDRY STAIN AND SOIL PRETREATMENT SHEET |
| ***C 11D 17/06*** | EP 2337840* | LAUNDRY STAIN AND SOIL PRETREATMENT SHEET |
| ***C 12M 1/00*** | EP 2325293 | Assembly and method for three-dimensional distribution of electromagnetic radiation in a fluid medium |
| ***C 12M 1/24*** | EP 2337843* | SYSTEMS, APPARATUSES AND METHODS FOR CULTIVATING MICROORGANISMS AND MITIGATION OF GASES |
| ***C 12N 1/00*** | EP 2326707* | METHOD FOR PRODUCTION OF ISOPRENOIDS |
| ***C 12N 1/12*** | EP 2337843* | SYSTEMS, APPARATUSES AND METHODS FOR CULTIVATING MICROORGANISMS AND MITIGATION OF GASES |
| ***C 12N 1/18*** | EP 2329008* | NOVEL YEAST STRAINS FOR PRODUCING ALCOHOL |
| ***C 12N 1/19*** | EP 2326707* | METHOD FOR PRODUCTION OF ISOPRENOIDS |
| ***C 12N 1/20*** | EP 2331629* | STARCH-BASED MICROPARTICLES FOR THE RELEASE OF AGENTS DISPOSED THEREIN |

| (51) | Broj objave evropske prijave patenta | (51) |
|---|---|---|
| ***C 12N 1/20*** | EP 2333046 | METHOD FOR PRODUCTION OF SEED MATERIAL FOR MICROORGANISMS OPTIMIZED AS CATALYST FOR PARALLEL COMPLEX MINERALIZATION REACTION |
| ***C 12N 1/36*** | EP 2337846* | NON-NATURAL AMINO ACID REPLICATION-DEPENDENT MICROORGANISMS AND VACCINES |
| ***C 12N 5/00*** | EP 2241577 | Anti-CD37 antibodies |
| ***C 12N 5/06*** | EP 2076279* | NATIVE (TELOPEPTIDE) PLACENTAL COLLAGEN COMPOSITIONS |
| ***C 12N 5/06*** | EP 2119777 | GABA NEURON PROGENITOR CELL MARKER 65B13 |
| ***C 12N 5/06*** | EP 2331678* | METHODS FOR OBTAINING HIGH VIABLE CELL DENSITY IN MAMMALIAN CELL CULTURE |
| ***C 12N 5/0784*** | EP 2251418 | Mature dendritic cell compositions and methods for culturing same |
| ***C 12N 5/10*** | EP 2328405* | PLANT GLUTAMINE PHENYLPYRUVATE TRANSAMINASE GENE AND TRANSGENIC PLANTS CARRYING SAME |
| ***C 12N 5/10*** | EP 2331678* | METHODS FOR OBTAINING HIGH VIABLE CELL DENSITY IN MAMMALIAN CELL CULTURE |
| ***C 12N 5/10*** | EP 2342223* | MODIFIED ANIMAL ERYTHROPOIETIN POLYPEPTIDES AND THEIR USES |
| ***C 12N 9/10*** | EP 2331694* | HERBICIDE RESISTANT SUNFLOWER PLANTS |
| ***C 12N 9/52*** | EP 2333056 | Liquid composition comprising an aspartic protease |
| ***C 12N 9/58*** | EP 2333056 | Liquid composition comprising an aspartic protease |
| ***C 12N 9/64*** | EP 2333056 | Liquid composition comprising an aspartic protease |
| ***C 12N 9/64*** | EP 2343370 | A THROBIN-LIKE ENZYME OF AGKISTRODON ACUTUS |
| ***C 12N 9/88*** | EP 2342331* | HERBICIDE-RESISTANT AHAS-MUTANTS AND METHODS OF USE |
| ***C 12N 9/96*** | EP 2333056 | Liquid composition comprising an aspartic protease |
| ***C 12N 11/00*** | EP 2333057 | SOLID SUPPORT COMPRISING MICROORGANISMS CAPABLE OF CONDUCTING PARALLEL MULTIPLE MINERALIZATION IMMOBILIZED THEREON, CATALYST COLUMN AND METHOD FOR PRODUCING SOLID MEDIUM FOR CULTIVATING PLANTS |
| ***C 12N 11/10*** | EP 2331629* | STARCH-BASED MICROPARTICLES FOR THE RELEASE OF AGENTS DISPOSED THEREIN |
| ***C 12N 15/09*** | EP 2084279* | DNA-GUIDED NANOPARTICLE ASSEMBLIES |
| ***C 12N 15/09*** | EP 2119777 | GABA NEURON PROGENITOR CELL MARKER 65B13 |
| ***C 12N 15/09*** | EP 2330193 | IMPROVED ANTIBODY MOLECULE |
| ***C 12N 15/09*** | EP 2342334* | TUMOR VASCULAR MARKER-TARGETED VACCINES |
| ***C 12N 15/11*** | EP 2331690* | COMPOSITIONS AND METHODS FOR INHIBITING EXPRESSION OF MUTANT EGFR GENE |
| ***C 12N 15/11*** | EP 2342223* | MODIFIED ANIMAL ERYTHROPOIETIN POLYPEPTIDES AND THEIR USES |
| ***C 12N 15/12*** | EP 2256203 | IL-23 and its receptor; related reagents and methods |
| ***C 12N 15/13*** | EP 2325208 | Polyubiquitin antibodies |
| ***C 12N 15/16*** | EP 2342223* | MODIFIED ANIMAL ERYTHROPOIETIN POLYPEPTIDES AND THEIR USES |
| ***C 12N 15/24*** | EP 2256203 | IL-23 and its receptor; related reagents and methods |
| ***C 12N 15/32*** | EP 2084279* | DNA-GUIDED NANOPARTICLE ASSEMBLIES |
| ***C 12N 15/44*** | EP 2324062* | CHIMERIC RESPIRATORY SYNCYTIAL VIRUS POLYPEPTIDE ANTIGENS |
| ***C 12N 15/55*** | EP 2331694* | HERBICIDE RESISTANT SUNFLOWER PLANTS |
| ***C 12N 15/60*** | EP 2342331* | HERBICIDE-RESISTANT AHAS-MUTANTS AND METHODS OF USE |
| ***C 12N 15/62*** | EP 2324062* | CHIMERIC RESPIRATORY SYNCYTIAL VIRUS POLYPEPTIDE ANTIGENS |
| ***C 12N 15/63*** | EP 2342344* | SYSTEM FOR CAPTURING&MODIFYING LARGE PIECES OF GENOMIC DNA AND CONSTRUCTING ORGANISMS WITH SYNTHETIC CHLOROPLASTS |
| ***C 12N 15/82*** | EP 2328405* | PLANT GLUTAMINE PHENYLPYRUVATE TRANSAMINASE GENE AND TRANSGENIC PLANTS CARRYING SAME |
| ***C 12N 15/82*** | EP 2329028* | ENGINEERING OF BOLTING RESISTANCE IN SUGAR BEET |

| (51) | Broj objave evropske prijave patenta | (51) |
|---|---|---|
| | | BY MEANS OF THE TRANSGENIC EXPRESSION OF THE BEET HOMOLOGUE OF FLOWERING TIME CONTROL GENE FT |
| ***C 12N 15/82*** | EP 2331694* | HERBICIDE RESISTANT SUNFLOWER PLANTS |
| ***C 12N 15/82*** | EP 2334795* | COMPOSITIONS AND METHODS FOR EXPRESSION OF A HETEROLOGOUS NUCLEOTIDE SEQUENCE IN PLANTS |
| ***C 12N 15/82*** | EP 2334797* | PLANTS HAVING ENHANCED YIELD-RELATED TRAITS AND A METHOD FOR MAKING THE SAME |
| ***C 12N 15/82*** | EP 2342331* | HERBICIDE-RESISTANT AHAS-MUTANTS AND METHODS OF USE |
| ***C 12N 15/82*** | EP 2342344* | SYSTEM FOR CAPTURING&MODIFYING LARGE PIECES OF GENOMIC DNA AND CONSTRUCTING ORGANISMS WITH SYNTHETIC CHLOROPLASTS |
| ***C 12P 3/00*** | EP 2342346* | ENERGY PRODUCTION WITH HYPERTHERMOPHILIC ORGANISMS |
| ***C 12P 5/02*** | EP 2342346* | ENERGY PRODUCTION WITH HYPERTHERMOPHILIC ORGANISMS |
| ***C 12P 7/06*** | EP 2342346* | ENERGY PRODUCTION WITH HYPERTHERMOPHILIC ORGANISMS |
| ***C 12P 7/54*** | EP 2342346* | ENERGY PRODUCTION WITH HYPERTHERMOPHILIC ORGANISMS |
| ***C 12P 19/34*** | EP 2326730* | MICRO RNA (MIRNA) AND NEUROFIBROMATOSIS TYPE 1 : A ROLE IN DIAGNOSIS AND THERAPY |
| ***C 12P 21/00*** | EP 2337846* | NON-NATURAL AMINO ACID REPLICATION-DEPENDENT MICROORGANISMS AND VACCINES |
| ***C 12P 21/02*** | EP 2342223* | MODIFIED ANIMAL ERYTHROPOIETIN POLYPEPTIDES AND THEIR USES |
| ***C 12P 21/08*** | EP 2119777 | GABA NEURON PROGENITOR CELL MARKER 65B13 |
| ***C 12Q 1/02*** | EP 2119777 | GABA NEURON PROGENITOR CELL MARKER 65B13 |
| ***C 12Q 1/25*** | EP 2115159* | ASSAYS FOR MODULATORS OF PARKIN ACTIVITY USING NOVEL SUBSTRATES |
| ***C 12Q 1/34*** | EP 2340042* | METHODS AND COMPOSITIONS FOR THE TREATMENT OF CANCER |
| ***C 12Q 1/68*** | EP 2119777 | GABA NEURON PROGENITOR CELL MARKER 65B13 |
| ***C 12Q 1/68*** | EP 2239340 | Identification of surface-oriented antigens for tumour diagnosis and treatment |
| ***C 12Q 1/68*** | EP 2256203 | IL-23 and its receptor; related reagents and methods |
| ***C 12Q 1/68*** | EP 2324126* | METHOD OF IDENTIFYING DISEASE RISK FACTORS |
| ***C 12Q 1/68*** | EP 2326730* | MICRO RNA (MIRNA) AND NEUROFIBROMATOSIS TYPE 1 : A ROLE IN DIAGNOSIS AND THERAPY |
| ***C 12Q 1/68*** | EP 2342344* | SYSTEM FOR CAPTURING&MODIFYING LARGE PIECES OF GENOMIC DNA AND CONSTRUCTING ORGANISMS WITH SYNTHETIC CHLOROPLASTS |
| ***C 12R 1/865*** | EP 2329008* | NOVEL YEAST STRAINS FOR PRODUCING ALCOHOL |
| ***C 22C 1/05*** | EP 2326738* | MILLING CONE FOR A COMPRESSION CRUSHER |
| ***C 22C 1/05*** | EP 2329052* | COMPOSITE TOOTH FOR WORKING THE GROUND OR ROCK |
| ***C 22C 1/05*** | EP 2334836* | HIERARCHICAL COMPOSITE MATERIAL |
| ***C 22C 18/00*** | EP 2326442* | MULTI-COMPONENT METAL INJECTION MOLDING |
| ***C 23C 16/04*** | EP 2253735 | Vessel processing |
| ***C 23C 16/505*** | EP 2251452 | Vessel processing |
| ***C 23C 16/505*** | EP 2251454 | Vessel coating and inspection |
| ***C 23C 16/505*** | EP 2253735 | Vessel processing |
| ***C 23C 16/52*** | EP 2251454 | Vessel coating and inspection |
| ***C 23C 16/52*** | EP 2253735 | Vessel processing |
| ***C 23C 16/54*** | EP 2251454 | Vessel coating and inspection |
| ***C 23C 16/54*** | EP 2253735 | Vessel processing |
| ***C 23C 18/44*** | EP 2253736 | Method for electroless deposition of nano metallic silver and reflector of high reflectance deposited by nano metallic silver using the same |
| ***C 40B 40/08*** | EP 2340256* | IMPROVED ANTIBODY LIBRARIES |
| ***D 06F 37/26*** | EP 2129823* | WASHING MACHINE TANK PROVIDED WITH EXTERNAL |

| (51) | Broj objave evropske prijave patenta | (51) |
|---|---|---|
| | | REINFORCING CAP ON BOTTOM WALL |
| ***D 06F 75/12*** | EP 2243877 | Iron with external water reservoir |
| ***D 06F 75/38*** | EP 2243877 | Iron with external water reservoir |
| ***D 06N 7/00*** | EP 2331744* | LOW WEIGHT CARPET AND CARPET TILE AND METHODS OF MANUFACTURE, SIZING AND INSTALLATION |
| ***D 06P 3/14*** | EP 2251387 | Acidic azo dyes |
| ***D 06P 3/24*** | EP 2251387 | Acidic azo dyes |
| ***D 21B 1/16*** | EP 2236664 | Process for the production of nano-fibrillar cellulose suspensions |
| ***D 21C 9/00*** | EP 2236664 | Process for the production of nano-fibrillar cellulose suspensions |
| ***D 21D 1/00*** | EP 2236664 | Process for the production of nano-fibrillar cellulose suspensions |
| ***D 21H 11/00*** | EP 2236664 | Process for the production of nano-fibrillar cellulose suspensions |
| ***D 21H 11/18*** | EP 2236664 | Process for the production of nano-fibrillar cellulose suspensions |
| ***E 01B 1/00*** | EP 2329079* | TRACK SUPPORTING LAYER |
| ***E 01B 21/02*** | EP 2329079* | TRACK SUPPORTING LAYER |
| ***E 01C 7/18*** | EP 2334873* | BITUMINOUS COATING WITH GREAT ACOUSTIC PERFORMANCE |
| ***E 01C 7/26*** | EP 2334873* | BITUMINOUS COATING WITH GREAT ACOUSTIC PERFORMANCE |
| ***E 01C 11/22*** | EP 2334873* | BITUMINOUS COATING WITH GREAT ACOUSTIC PERFORMANCE |
| ***E 01C 13/08*** | EP 2337898* | SYSTEM AND METHOD FOR STORAGE AND TEMPORARY INSTALLATION OF SECONDARY FLOORING SURFACE |
| ***E 01C 19/10*** | EP 2324157* | A METHOD AND SYSTEM FOR HOT ASPHALT RECYCLING |
| ***E 01F 9/04*** | EP 2342292* | RETROREFLECTIVE COATING AND METHOD FOR APPLYING A RETROREFLECTIVE COATING ON A STRUCTURE |
| ***E 02B 3/16*** | EP 2331753* | METHOD AND SYSTEM FOR PUNCTUAL FASTENING A WATERPROOFING MEMBRANE TO HYDRAULIC WORKS |
| ***E 02B 5/02*** | EP 2331753* | METHOD AND SYSTEM FOR PUNCTUAL FASTENING A WATERPROOFING MEMBRANE TO HYDRAULIC WORKS |
| ***E 02F 9/28*** | EP 2329052* | COMPOSITE TOOTH FOR WORKING THE GROUND OR ROCK |
| ***E 04B 1/68*** | EP 2331760* | ASSEMBLING OF SEAL AND PLATES TO WALL ELEMENT |
| ***E 04B 2/70*** | EP 1826330 | Method for manufacturing a prefabricated wall element |
| ***E 04B 7/02*** | EP 1959068 | Device for renovating flat roofs |
| ***E 04B 7/14*** | EP 1959068 | Device for renovating flat roofs |
| ***E 04C 2/04*** | EP 2326775* | BUILDING ELEMENTS AND METHOD OF ERECTING BUILDINGS WITH SAID BUILDING ELEMENTS |
| ***E 04C 2/04*** | EP 2342394* | CONNECTION SYSTEM FOR PREFABRICATED THERMAL BREAK PANELS |
| ***E 04C 2/288*** | EP 2326775* | BUILDING ELEMENTS AND METHOD OF ERECTING BUILDINGS WITH SAID BUILDING ELEMENTS |
| ***E 04C 2/52*** | EP 2338005* | A STONE PANEL |
| ***E 04D 11/00*** | EP 1959068 | Device for renovating flat roofs |
| ***E 04D 13/14*** | EP 2253772 | A venting device |
| ***E 04D 13/17*** | EP 2253772 | A venting device |
| ***E 04F 13/08*** | EP 2343419 | Tile alignment and leveling device and method for using same |
| ***E 04F 21/18*** | EP 2343419 | Tile alignment and leveling device and method for using same |
| ***E 04F 21/22*** | EP 2343419 | Tile alignment and leveling device and method for using same |
| ***E 04G 1/36*** | EP 2138402 | Variable modular docking system |
| ***E 04H 4/12*** | EP 2122171* | FLOW CONTROL |
| ***E 05B 15/12*** | EP 2331779* | A LOCK AND KEY COMBINATION WITH A LARGE NUMBER OF CODES |
| ***E 05B 19/02*** | EP 2331779* | A LOCK AND KEY COMBINATION WITH A LARGE NUMBER OF CODES |
| ***E 05B 27/04*** | EP 2331779* | A LOCK AND KEY COMBINATION WITH A LARGE NUMBER OF CODES |
| ***E 05B 27/10*** | EP 2331779* | A LOCK AND KEY COMBINATION WITH A LARGE NUMBER OF CODES |
| ***E 05D 11/10*** | EP 2253788 | Device for blocking the rotation of a door and door comprising |

| (51) | Broj objave evropske prijave patenta | (51) |
|---|---|---|
| | | such a device |
| ***E 05D 11/10*** | EP 2256275 | Rotation blocking device of a door and door equipped with such device |
| ***E 05D 15/06*** | EP 2305085 | Shower cabin with sliding door |
| ***E 05F 1/00*** | EP 2253788 | Device for blocking the rotation of a door and door comprising such a device |
| ***E 05F 1/00*** | EP 2256275 | Rotation blocking device of a door and door equipped with such device |
| ***E 05F 3/22*** | EP 2256275 | Rotation blocking device of a door and door equipped with such device |
| ***E 05F 15/00*** | EP 2324179* | DRIVE SYSTEM FOR A DOOR |
| ***E 05F 15/14*** | EP 2324179* | DRIVE SYSTEM FOR A DOOR |
| ***E 05F 15/16*** | EP 2324179* | DRIVE SYSTEM FOR A DOOR |
| ***E 06B 1/62*** | EP 2093368 | Reveal connection profile for components bordering plaster |
| ***E 06B 3/62*** | EP 2331760* | ASSEMBLING OF SEAL AND PLATES TO WALL ELEMENT |
| ***E 21B 10/00*** | EP 2334993* | SYSTEM AND METHOD FOR GEOTHERMAL CONDUIT LOOP IN-GROUND INSTALLATION AND SOIL PENETRATING HEAD THEREFOR |
| ***E 21B 41/00*** | EP 2334898* | PROCESS FOR GENERATING HYDROGEN |
| ***E 21B 43/00*** | EP 2334898* | PROCESS FOR GENERATING HYDROGEN |
| ***E 21B 43/24*** | EP 2334898* | PROCESS FOR GENERATING HYDROGEN |
| ***E 21B 43/243*** | EP 2334898* | PROCESS FOR GENERATING HYDROGEN |
| ***F 01N 13/10*** | EP 2246543 | Cylinder head with two exhaust manifolds and method to operate an internal combustion engine with such a cylinder head |
| ***F 02B 37/007*** | EP 2246543 | Cylinder head with two exhaust manifolds and method to operate an internal combustion engine with such a cylinder head |
| ***F 02B 37/02*** | EP 2246543 | Cylinder head with two exhaust manifolds and method to operate an internal combustion engine with such a cylinder head |
| ***F 02B 37/18*** | EP 2246543 | Cylinder head with two exhaust manifolds and method to operate an internal combustion engine with such a cylinder head |
| ***F 02F 1/24*** | EP 2246543 | Cylinder head with two exhaust manifolds and method to operate an internal combustion engine with such a cylinder head |
| ***F 02M 47/02*** | EP 2249021 | Fuel Delivery System |
| ***F 02M 55/00*** | EP 2243950 | A connector arrangement for a fluid system |
| ***F 02M 55/00*** | EP 2249021 | Fuel Delivery System |
| ***F 02M 63/02*** | EP 2249021 | Fuel Delivery System |
| ***F 02M 69/54*** | EP 2249021 | Fuel Delivery System |
| ***F 03D 3/04*** | EP 2324242* | TURBINE APPARATUS |
| ***F 03D 11/00*** | EP 2324242* | TURBINE APPARATUS |
| ***F 03G 4/00*** | EP 2334993* | SYSTEM AND METHOD FOR GEOTHERMAL CONDUIT LOOP IN-GROUND INSTALLATION AND SOIL PENETRATING HEAD THEREFOR |
| ***F 04B 1/00*** | EP 2071185 | MULTIPLUNGER HORIZONTAL SINGLE-ACTING PUMP |
| ***F 04B 15/04*** | EP 2071185 | MULTIPLUNGER HORIZONTAL SINGLE-ACTING PUMP |
| ***F 04B 49/06*** | EP 2122171* | FLOW CONTROL |
| ***F 04B 49/20*** | EP 2122171* | FLOW CONTROL |
| ***F 04D 15/00*** | EP 2122171* | FLOW CONTROL |
| ***F 16F 7/14*** | EP 2339202 | Dampening and spring arrangement and method for its production |
| ***F 16H 3/64*** | EP 2337971* | AN EPICYCLIC TRANSMISSION |
| ***F 16H 3/72*** | EP 2337971* | AN EPICYCLIC TRANSMISSION |
| ***F 16H 37/06*** | EP 2336601 | Transmission with one input and two output opposed shafts |
| ***F 16H 48/10*** | EP 2336601 | Transmission with one input and two output opposed shafts |
| ***F 16J 15/02*** | EP 2331760* | ASSEMBLING OF SEAL AND PLATES TO WALL ELEMENT |
| ***F 16L 1/028*** | EP 2334993* | SYSTEM AND METHOD FOR GEOTHERMAL CONDUIT LOOP IN-GROUND INSTALLATION AND SOIL PENETRATING HEAD THEREFOR |
| ***F 16L 1/032*** | EP 2334993* | SYSTEM AND METHOD FOR GEOTHERMAL CONDUIT LOOP IN-GROUND INSTALLATION AND SOIL PENETRATING HEAD THEREFOR |
| ***F 16L 11/08*** | EP 2261542 | Pipe for water-supply systems |
| ***F 16M 13/02*** | EP 2216582 | System for mounting an object to a surface |
| ***F 21V 17/06*** | EP 2331872* | COUPLING AND METHOD FOR USE WITH A LAMP |

| (51) | Broj objave evropske prijave patenta | (51) |
|---|---|---|
| | | FITTING |
| ***F 21V 19/04*** | EP 2331872* | COUPLING AND METHOD FOR USE WITH A LAMP FITTING |
| ***F 23C 10/00*** | EP 2326875* | PLANT AND PROCESS FOR THE LOOPING-TYPE COMBUSTION OF SOLID CARBON- CONTAINING FUELS |
| ***F 23G 5/24*** | EP 2334762* | METHOD AND SYSTEM FOR PRODUCTION OF A CLEAN HOT GAS BASED ON SOLID FUELS |
| ***F 23J 15/04*** | EP 2331875* | METHOD AND SYSTEM FOR COOLING HOT GASES BY WATER INJECTION |
| ***F 23J 15/06*** | EP 2331875* | METHOD AND SYSTEM FOR COOLING HOT GASES BY WATER INJECTION |
| ***F 24C 15/20*** | EP 2249088 | Extractor hood, in particular for domestic environments |
| ***F 24D 13/02*** | EP 2338005* | A STONE PANEL |
| ***F 24H 3/00*** | EP 2187144 | Electric plate radiator |
| ***F 24J 1/00*** | EP 2129973* | A METHOD OF GENERATING HEAT |
| ***F 24J 3/08*** | EP 2334993* | SYSTEM AND METHOD FOR GEOTHERMAL CONDUIT LOOP IN-GROUND INSTALLATION AND SOIL PENETRATING HEAD THEREFOR |
| ***F 25B 27/00*** | EP 2334993* | SYSTEM AND METHOD FOR GEOTHERMAL CONDUIT LOOP IN-GROUND INSTALLATION AND SOIL PENETRATING HEAD THEREFOR |
| ***F 25B 41/00*** | EP 2334993* | SYSTEM AND METHOD FOR GEOTHERMAL CONDUIT LOOP IN-GROUND INSTALLATION AND SOIL PENETRATING HEAD THEREFOR |
| ***F 26B 5/06*** | EP 2338016* | APPARATUS AND METHODS FOR MAKING, STORING, AND ADMINISTERING FREEZE-DRIED MATERIALS SUCH AS FREEZE-DRIED PLASMA |
| ***F 28F 21/04*** | EP 2338005* | A STONE PANEL |
| ***G 01B 13/12*** | EP 2335020* | INSTALLATION FOR CHECKING THE QUALITY OF A SUCCESSION OF ARTICLES, IN PARTICULAR BOTTLES |
| ***G 01B 21/14*** | EP 2335020* | INSTALLATION FOR CHECKING THE QUALITY OF A SUCCESSION OF ARTICLES, IN PARTICULAR BOTTLES |
| ***G 01B 21/30*** | EP 2335020* | INSTALLATION FOR CHECKING THE QUALITY OF A SUCCESSION OF ARTICLES, IN PARTICULAR BOTTLES |
| ***G 01C 21/20*** | EP 2329284* | BEARING INFORMATION ON A CARD |
| ***G 01C 21/34*** | EP 2146184 | Method for inputting and presenting information in a navigation system |
| ***G 01D 5/26*** | EP 2095082* | FIBER OPTIC TEMPERATURE SENSOR |
| ***G 01F 23/288*** | EP 2331944* | METHOD AND SYSTEM FOR PERFORMING X-RAY INSPECTION OF A LIQUID PRODUCT AT A SECURITY CHECKPOINT |
| ***G 01K 5/00*** | EP 2095082* | FIBER OPTIC TEMPERATURE SENSOR |
| ***G 01K 5/48*** | EP 2095082* | FIBER OPTIC TEMPERATURE SENSOR |
| ***G 01K 5/52*** | EP 2095082* | FIBER OPTIC TEMPERATURE SENSOR |
| ***G 01K 5/54*** | EP 2095082* | FIBER OPTIC TEMPERATURE SENSOR |
| ***G 01K 13/00*** | EP 2342791* | ELECTRONIC CURRENT INTERRUPT DEVICE FOR BATTERY |
| ***G 01K 15/00*** | EP 2095082* | FIBER OPTIC TEMPERATURE SENSOR |
| ***G 01N 1/40*** | EP 2286919 | Filtration device for analyses |
| ***G 01N 11/04*** | EP 2249141 | A viscometer and a method for operating the same |
| ***G 01N 15/08*** | EP 2251452 | Vessel processing |
| ***G 01N 15/08*** | EP 2251454 | Vessel coating and inspection |
| ***G 01N 15/08*** | EP 2253735 | Vessel processing |
| ***G 01N 21/64*** | EP 2326955* | METHOD FOR MARKING AND/OR IDENTIFYING BIOMOLECULES |
| ***G 01N 23/02*** | EP 2334565* | TRAY FOR USE IN PERFORMING X-RAY INSPECTION OF ARTICLES AT A SECURITY CHECKPOINT AND METHOD OF USING SAME |
| ***G 01N 23/04*** | EP 2064535* | METHOD AND APPARATUS FOR ASSESSING CHARACTERISTICS OF LIQUIDS |
| ***G 01N 23/04*** | EP 2331944* | METHOD AND SYSTEM FOR PERFORMING X-RAY INSPECTION OF A LIQUID PRODUCT AT A SECURITY |

| (51) | Broj objave evropske prijave patenta | (51) |
|---|---|---|
| | | CHECKPOINT |
| ***G 01N 23/04*** | EP 2334565* | TRAY FOR USE IN PERFORMING X-RAY INSPECTION OF ARTICLES AT A SECURITY CHECKPOINT AND METHOD OF USING SAME |
| ***G 01N 23/083*** | EP 2334565* | TRAY FOR USE IN PERFORMING X-RAY INSPECTION OF ARTICLES AT A SECURITY CHECKPOINT AND METHOD OF USING SAME |
| ***G 01N 23/10*** | EP 2064535* | METHOD AND APPARATUS FOR ASSESSING CHARACTERISTICS OF LIQUIDS |
| ***G 01N 23/10*** | EP 2331944* | METHOD AND SYSTEM FOR PERFORMING X-RAY INSPECTION OF A LIQUID PRODUCT AT A SECURITY CHECKPOINT |
| ***G 01N 23/10*** | EP 2334565* | TRAY FOR USE IN PERFORMING X-RAY INSPECTION OF ARTICLES AT A SECURITY CHECKPOINT AND METHOD OF USING SAME |
| ***G 01N 24/08*** | EP 2331955* | A METHOD OF DIAGNOSING A RESPIRATORY DISEASE |
| ***G 01N 27/26*** | EP 2126556* | ELECTROCHEMICAL BIOSENSOR MEASURING SYSTEM |
| ***G 01N 33/48*** | EP 2331955* | A METHOD OF DIAGNOSING A RESPIRATORY DISEASE |
| ***G 01N 33/483*** | EP 2331955* | A METHOD OF DIAGNOSING A RESPIRATORY DISEASE |
| ***G 01N 33/50*** | EP 2115159* | ASSAYS FOR MODULATORS OF PARKIN ACTIVITY USING NOVEL SUBSTRATES |
| ***G 01N 33/53*** | EP 2119777 | GABA NEURON PROGENITOR CELL MARKER 65B13 |
| ***G 01N 33/53*** | EP 2256203 | IL-23 and its receptor; related reagents and methods |
| ***G 01N 33/53*** | EP 2342220* | METHODS AND SYSTEMS FOR PREDICTING MISFOLDED PROTEIN EPITOPES |
| ***G 01N 33/53*** | EP 2342562* | IMPROVED METHOD OF RNA DISPLAY |
| ***G 01N 33/533*** | EP 2326955* | METHOD FOR MARKING AND/OR IDENTIFYING BIOMOLECULES |
| ***G 01N 33/574*** | EP 2239580 | Determination of 5-ASA efficacy in CRC prevention and/or treatment by gene expression analysis |
| ***G 01N 33/574*** | EP 2336779 | Identification of cancer protein biomarkers using proteomic techniques |
| ***G 01N 33/577*** | EP 2328931* | ANTI-HEPCIDIN-25 SELECTIVE ANTIBODIES AND USES THEREOF |
| ***G 01N 33/58*** | EP 2326955* | METHOD FOR MARKING AND/OR IDENTIFYING BIOMOLECULES |
| ***G 01N 33/68*** | EP 2323687* | METHOD OF UPREGULATING SORLA FOR THE TREATMENT OF ALZHEIMER'S DISEASE |
| ***G 01N 33/68*** | EP 2330424 | COPD diagnosis |
| ***G 01N 33/68*** | EP 2331965* | ANALYSIS OF GLYCATED PROTEINS |
| ***G 01N 33/68*** | EP 2342220* | METHODS AND SYSTEMS FOR PREDICTING MISFOLDED PROTEIN EPITOPES |
| ***G 01N 35/00*** | EP 2126556* | ELECTROCHEMICAL BIOSENSOR MEASURING SYSTEM |
| ***G 01P 3/36*** | EP 2233932 | Optical system and method for determining direction, velocity and position of a ball traversing a plane |
| ***G 01P 3/68*** | EP 2233932 | Optical system and method for determining direction, velocity and position of a ball traversing a plane |
| ***G 01R 21/133*** | EP 2340440* | ELECTRICITY METER, REMOTE CONTROLLABLE DISCONNECTOR MODULE AND ELECTRICAL INSTALLATION COMPRISING THE ELECTRICITY METER |
| ***G 01R 22/06*** | EP 2340440* | ELECTRICITY METER, REMOTE CONTROLLABLE DISCONNECTOR MODULE AND ELECTRICAL INSTALLATION COMPRISING THE ELECTRICITY METER |
| ***G 01R 25/00*** | EP 2329599* | SYSTEM AND METHOD FOR PRECISION PHASE SHIFT MEASUREMENT |
| ***G 01R 31/28*** | EP 2341353 | Self-aligning test fixture for printed circuit board |
| ***G 01R 33/465*** | EP 2331955* | A METHOD OF DIAGNOSING A RESPIRATORY DISEASE |
| ***G 01S 1/00*** | EP 2329284* | BEARING INFORMATION ON A CARD |
| ***G 02B 6/38*** | EP 2335107* | MAGNETIC CONNECTOR WITH OPTICAL SIGNAL PATH |
| ***G 02B 26/06*** | EP 2324387* | DEFORMABLE MIRROR WITH FORCE ACTUATORS AND DISTRIBUTED STIFFNESS |
| ***G 02B 26/08*** | EP 2324387* | DEFORMABLE MIRROR WITH FORCE ACTUATORS AND |

| (51) | Broj objave evropske prijave patenta | (51) |
|---|---|---|
| | | DISTRIBUTED STIFFNESS |
| ***G 03F 7/004*** | EP 2333609 | Photosensitive adhesive composition, and obtained using the same, adhesive film, adhesive sheet, semiconductor wafer with adhesive layer, semiconductor device and electronic part |
| ***G 03F 7/037*** | EP 2333609 | Photosensitive adhesive composition, and obtained using the same, adhesive film, adhesive sheet, semiconductor wafer with adhesive layer, semiconductor device and electronic part |
| ***G 05D 7/06*** | EP 2122171* | FLOW CONTROL |
| ***G 06F 1/16*** | EP 2335107* | MAGNETIC CONNECTOR WITH OPTICAL SIGNAL PATH |
| ***G 06F 1/26*** | EP 2335107* | MAGNETIC CONNECTOR WITH OPTICAL SIGNAL PATH |
| ***G 06F 1/32*** | EP 2115550* | METHODS AND SYSTEMS FOR POWER MANAGEMENT IN A DATA PROCESSING SYSTEM |
| ***G 06F 3/00*** | EP 2115627* | SYNCHRONIZATION METHODS AND SYSTEMS |
| ***G 06F 3/01*** | EP 2327201* | SYSTEMS AND METHODS FOR TRANSMITTING HAPTIC MESSAGES |
| ***G 06F 3/01*** | EP 2328063 | Portable electronic device and method of controlling same to provide tactile feedback |
| ***G 06F 3/01*** | EP 2328065 | Electronic device and method of controlling same |
| ***G 06F 3/01*** | EP 2329339* | SYSTEMS AND METHODS FOR SHIFTING HAPTIC FEEDBACK FUNCTION BETWEEN PASSIVE AND ACTIVE MODES |
| ***G 06F 3/01*** | EP 2329636* | SYSTEMS AND METHODS FOR HAPTIC MESSAGE TRANSMISSION |
| ***G 06F 3/01*** | EP 2329637* | SYSTEMS AND METHODS FOR MAPPING MESSAGE CONTENTS TO VIRTUAL PHYSICAL PROPERTIES FOR VIBROTACTILE MESSAGING |
| ***G 06F 3/01*** | EP 2342615* | MULTIPLE ACTUATION HANDHELD DEVICE |
| ***G 06F 3/041*** | EP 2328065 | Electronic device and method of controlling same |
| ***G 06F 3/041*** | EP 2342615* | MULTIPLE ACTUATION HANDHELD DEVICE |
| ***G 06F 3/048*** | EP 2327201* | SYSTEMS AND METHODS FOR TRANSMITTING HAPTIC MESSAGES |
| ***G 06F 3/048*** | EP 2328065 | Electronic device and method of controlling same |
| ***G 06F 3/048*** | EP 2328068 | Portable electronic device and method of controlling same |
| ***G 06F 3/048*** | EP 2329339* | SYSTEMS AND METHODS FOR SHIFTING HAPTIC FEEDBACK FUNCTION BETWEEN PASSIVE AND ACTIVE MODES |
| ***G 06F 3/048*** | EP 2329636* | SYSTEMS AND METHODS FOR HAPTIC MESSAGE TRANSMISSION |
| ***G 06F 3/048*** | EP 2329637* | SYSTEMS AND METHODS FOR MAPPING MESSAGE CONTENTS TO VIRTUAL PHYSICAL PROPERTIES FOR VIBROTACTILE MESSAGING |
| ***G 06F 9/00*** | EP 2115627* | SYNCHRONIZATION METHODS AND SYSTEMS |
| ***G 06F 11/30*** | EP 2062140* | SYSTEM AND METHOD FOR MONITORING AND MANAGING ENERGY PERFORMANCE |
| ***G 06F 13/00*** | EP 2115627* | SYNCHRONIZATION METHODS AND SYSTEMS |
| ***G 06F 17/00*** | EP 2115627* | SYNCHRONIZATION METHODS AND SYSTEMS |
| ***G 06F 17/30*** | EP 2342663* | DISTRIBUTED DATA STORAGE |
| ***G 06F 19/00*** | EP 2254068 | Method and system providing improved data matching for virtual planning |
| ***G 06F 19/00*** | EP 2332082* | METHOD OF CHARACTERIZING SEQUENCES FROM GENETIC MATERIAL SAMPLES |
| ***G 06F 19/00*** | EP 2342220* | METHODS AND SYSTEMS FOR PREDICTING MISFOLDED PROTEIN EPITOPES |
| ***G 06F 21/00*** | EP 2284750 | System and method for detecting obfuscated malware using code normalization |
| ***G 06F 21/00*** | EP 2309408 | Method and system for detection and prediction of computer virus-related epidemics |
| ***G 06G 7/48*** | EP 2329480* | SURGICAL BURR HOLE DRILLING SIMULATOR |
| ***G 06G 7/60*** | EP 2329480* | SURGICAL BURR HOLE DRILLING SIMULATOR |
| ***G 06K 7/10*** | EP 2126556* | ELECTROCHEMICAL BIOSENSOR MEASURING SYSTEM |
| ***G 06K 9/00*** | EP 2339507 | Head detection and localisation method |
| ***G 06K 15/12*** | EP 2082358* | HOLLOW DOT PRINTING APPARATUS AND METHODS |

| (51) | Broj objave evropske prijave patenta | (51) |
|---|---|---|
| ***G 06K 17/00*** | EP 2333715 | DISPLAY SUPPORT SYSTEM |
| ***G 06K 19/077*** | EP 2329284* | BEARING INFORMATION ON A CARD |
| ***G 06K 19/077*** | EP 2329563* | REMOVABLE CARD FOR A CONTACTLESS COMMUNICATION, ITS UTILIZATION AND THE METHOD OF PRODUCTION |
| ***G 06Q 30/00*** | EP 2324449* | A SYSTEM FOR TARGETED ADVERTISING |
| ***G 06Q 50/00*** | EP 2333715 | DISPLAY SUPPORT SYSTEM |
| ***G 07F 1/04*** | EP 2204781 | Guiding device |
| ***G 08B 6/00*** | EP 2329480* | SURGICAL BURR HOLE DRILLING SIMULATOR |
| ***G 08B 13/12*** | EP 2251116 | Barbed tape with sensor conductor and reinforcement wire |
| ***G 09B 23/28*** | EP 2329480* | SURGICAL BURR HOLE DRILLING SIMULATOR |
| ***G 09F 3/00*** | EP 2324470* | BOTTLE SHIELDS |
| ***G 09G 3/32*** | EP 2332138* | METHOD AND SYSTEM FOR COMPENSATING AGEING EFFECTS IN LIGHT EMITTING DIODE DISPLAY DEVICES |
| ***H 01B 1/22*** | EP 2339695 | Circuit connecting material, connection structure for circuit member using the same and production method thereof |
| ***H 01L 21/329*** | EP 2341528 | Power Semiconductor Device and its manufacturing method |
| H 01L 21/768 | EP 1577939 | Method of manufacturing a semiconductor device having damascene structures with air gaps |
| H 01L 21/768 | EP 1577940 | Method of manufacturing a semiconductor device having damascene structures with air gaps |
| ***H 01L 29/06*** | EP 2341528 | Power Semiconductor Device and its manufacturing method |
| ***H 01L 29/32*** | EP 2341528 | Power Semiconductor Device and its manufacturing method |
| ***H 01L 29/861*** | EP 2341528 | Power Semiconductor Device and its manufacturing method |
| ***H 01L 31/0352*** | EP 2118937* | A PHOTOVOLTAIC APPARATUS HAVING AN ELONGATED PHOTOVOLTAIC DEVICE USING AN INVOLUTE-BASED CONCENTRATOR |
| ***H 01L 31/052*** | EP 2118937* | A PHOTOVOLTAIC APPARATUS HAVING AN ELONGATED PHOTOVOLTAIC DEVICE USING AN INVOLUTE-BASED CONCENTRATOR |
| ***H 01M 10/44*** | EP 2342791* | ELECTRONIC CURRENT INTERRUPT DEVICE FOR BATTERY |
| ***H 01Q 1/22*** | EP 2329563* | REMOVABLE CARD FOR A CONTACTLESS COMMUNICATION, ITS UTILIZATION AND THE METHOD OF PRODUCTION |
| ***H 01Q 7/06*** | EP 2329563* | REMOVABLE CARD FOR A CONTACTLESS COMMUNICATION, ITS UTILIZATION AND THE METHOD OF PRODUCTION |
| ***H 01R 11/01*** | EP 2339695 | Circuit connecting material, connection structure for circuit member using the same and production method thereof |
| ***H 01R 13/631*** | EP 2332218* | MAINS PLUG |
| ***H 01R 13/633*** | EP 2332218* | MAINS PLUG |
| ***H 01R 13/66*** | EP 2335107* | MAGNETIC CONNECTOR WITH OPTICAL SIGNAL PATH |
| ***H 01R 39/64*** | EP 2339703 | Test point adaptor for coaxial cable connections |
| ***H 02B 1/56*** | EP 2335462* | COOLER ARRANGEMENT FOR AN ELECTRICAL OR EQUIPMENT CABINET HAVING AIR-TO-AIR HEAT EXCHANGER CASSETTES |
| ***H 02H 7/18*** | EP 2342791* | ELECTRONIC CURRENT INTERRUPT DEVICE FOR BATTERY |
| ***H 02J 7/04*** | EP 2342791* | ELECTRONIC CURRENT INTERRUPT DEVICE FOR BATTERY |
| ***H 02J 13/00*** | EP 2340440* | ELECTRICITY METER, REMOTE CONTROLLABLE DISCONNECTOR MODULE AND ELECTRICAL INSTALLATION COMPRISING THE ELECTRICITY METER |
| ***H 02K 1/16*** | EP 2332232* | STATOR FOR ROTARY ELECTRIC MACHINE AND METHOD FOR MAKING SAME |
| ***H 02K 1/18*** | EP 2332232* | STATOR FOR ROTARY ELECTRIC MACHINE AND METHOD FOR MAKING SAME |
| ***H 02K 1/20*** | EP 2332232* | STATOR FOR ROTARY ELECTRIC MACHINE AND METHOD FOR MAKING SAME |
| ***H 02K 1/27*** | EP 2340600* | A MIXER ASSEMBLY |
| ***H 02K 21/46*** | EP 2340600* | A MIXER ASSEMBLY |

| (51) | Broj objave evropske prijave patenta | (51) |
|---|---|---|
| ***H 03L 7/18*** | EP 2329599* | SYSTEM AND METHOD FOR PRECISION PHASE SHIFT MEASUREMENT |
| ***H 04L 5/00*** | EP 2327182* | IDENTIFICATION OF PACKET TRAFFIC TRANSMITTED BY VARIOUS DEVICES OPERATED IN MULTIPLE OVERLAPPED FREQUENCY BANDS IN PACKET-BASED OFDM SYSTEMS |
| ***H 04L 12/28*** | EP 2342868* | INTEGRATING PLURALITY OF BUILDING MANAGEMENT SERVICES AND HOME AUTOMATION SERVICES WITH PLURALITY OF MULTI-PLAY SERVICES ON NEUTRAL ACCESS NETWORK OPERATION BASIS |
| ***H 04L 12/46*** | EP 2342868* | INTEGRATING PLURALITY OF BUILDING MANAGEMENT SERVICES AND HOME AUTOMATION SERVICES WITH PLURALITY OF MULTI-PLAY SERVICES ON NEUTRAL ACCESS NETWORK OPERATION BASIS |
| ***H 04M 1/725*** | EP 2327201* | SYSTEMS AND METHODS FOR TRANSMITTING HAPTIC MESSAGES |
| ***H 04M 1/725*** | EP 2329339* | SYSTEMS AND METHODS FOR SHIFTING HAPTIC FEEDBACK FUNCTION BETWEEN PASSIVE AND ACTIVE MODES |
| ***H 04M 1/725*** | EP 2329636* | SYSTEMS AND METHODS FOR HAPTIC MESSAGE TRANSMISSION |
| ***H 04M 1/725*** | EP 2329637* | SYSTEMS AND METHODS FOR MAPPING MESSAGE CONTENTS TO VIRTUAL PHYSICAL PROPERTIES FOR VIBROTACTILE MESSAGING |
| ***H 04W 4/16*** | EP 2330837 | System, method and device for maintaining a communication session suspended for servicing of power supply |
| ***H 04W 52/02*** | EP 2330837 | System, method and device for maintaining a communication session suspended for servicing of power supply |
| ***H 05K 1/14*** | EP 2339695 | Circuit connecting material, connection structure for circuit member using the same and production method thereof |
| ***H 05K 3/32*** | EP 2343957 | Electrical interconnect |
| ***H 05K 3/36*** | EP 2339695 | Circuit connecting material, connection structure for circuit member using the same and production method thereof |
| ***H 05K 3/40*** | EP 2343957 | Electrical interconnect |
| ***H 05K 7/20*** | EP 2335462* | COOLER ARRANGEMENT FOR AN ELECTRICAL OR EQUIPMENT CABINET HAVING AIR-TO-AIR HEAT EXCHANGER CASSETTES |

## ОБЈАВА ПОВУЧЕНИХ ЗАХТЕВА ЗА ПРОШИРЕЊЕ ЕВРОПСКИХ ПРИЈАВА ПАТЕНАТА

**(51) (8)** **EP 2020843** *
***A 01F 29/01***
***A 01F 29/04***
***A 01D 34/53***
(23) 22.09.2010.
(30) IT 18.05.2006. RM20060268
(86) PCT/EP2007054771 16.05.2007.
(96) EP 07729219.1 16.05.2007. En
(87) WO2007135061 29.11.2007. 200748
(97) EP 2020843 11.02.2009. 200907 En
(41) 08.06.2011. 201123
**(54) SHREDDER DEVICE, IN PARTICULAR FOR AGRICULTURAL MACHINES**
(71) Bimek Srl., C. da Santo Stefano 110/A, 66010 Ripa Teatina, IT
(72) AURORA, Enrico, Via Scimonetti, 2, 66010 Miglianico, IT
(74) Petraz, Gilberto Luigi, et al, GLP S.r.l., Piazzale Cavedalis 6/2, 33100 Udine, IT

**(51) (8)** **EP 2130430**
***A 01K 13/00***
(23) 15.12.2010.
(96) EP 08010399.7 07.06.2008. De
(97) EP 2130430 09.12.2009. 200950 De
(41) 08.06.2011. 201123
**(54) Cleaning device for dog claws**
(71) Foldenauer, Willi, Menterstrasse 97, 81247 München, DE
(72) Foldenauer, Willi, Menterstrasse 97, 81247 München, DE

**(51) (8)** **EP 2186402**
***A 01K 67/027***
***C 12N 15/85***
***G 01N 33/00***
(23) 20.11.2010.
(30) US 06.06.2005. 687900 P
US 07.03.2006. 780262 P
(96) EP 09013182.2 18.05.2006. En
(97) EP 2186402 19.05.2010. 201020 En
(41) 25.05.2011. 201121
**(54) Knock-out animal models for novel genes and methods of use**
(71) Genentech, Inc., 1 DNA Way, South San Francisco CA 94080-4990, US;
Lexicon Pharmaceuticals, Inc., 8800 Technology Forest Place, The Woodlands, TX 77381, US
(72) Byers-Horner, Allison Anne, 433 Folk Crest Lane, Dickinson, TX 77539, US;
Combs, Katherin, 52 Country Forest Court, Spring, TX 77380, US;
Culbertson, Ling Ling, 2434 Foy River Lane, Spring, TX 77386, US;
Desauvage, Frederic, 187 Shooting Star Isle, Foster City, California 94404, US;
Ding, Zhiyong, 3807 Florentine Circle, Longmont, CO 80503, US;
Edwards, Joel, 23 Sunnydale Lane, Las Flores, CA 92688, US;
Girgis, Rosemary, 9914 Aldwell Court, Houston, TX 77064, US;
Junge, Harold, 1215 Bayswater Avenue, No 201, Burlingame, CA 94010, US;
Junutula, Jagath Reddy, 34391 Tupelo Street, Fremont, CA 94555, US;
Massey, Erin Marie, 15596 Interstate 45. S., No. 2702, Conroe, TX 77384, US;
McLain, Dina Rebecca, 5303 Hamilton Wolfe Road, No. 204, San Antonia, TX 78229, US;
Montgomery, Chuck, 15244 Saddlewood Drive, Conroe, TX 77384, US;
Payne, Bobby Joe, 23 Acorn Cluster Court, The Woodlands, TX 77381, US;
Phillips, Heidi, 1511 Walnut Drive, Palo Alto, CA 94303, US;
Qian, Ni Nancy, 11778 Westview Pkwy, Apt. 68, San Diego, CA 92126, US;
Rangel, Carolina, 810 East 24th Street, Houston, TX 77009, US;
Shi, Zheng-zheng, 53 Sliver Crescent Court, The Woodlands, TX 77382, US;
Sparks, Mary Jean, 7218 Black Forest Drive, Magnolia, TX 77354, US;
Stala, Joy, 246 Sentry Maple Place, The Woodlands, TX 77382, US;
Vogel, Peter, 7 Grayline Woods Place, The Woodlands, TX 77381, US;
Willis-Sevaux, Tracy Ellen, 205 Lakeshore Drive, Conroe, TX 77304, US;
Ye, Weilan, 119 Barkentine Street, Foster City, CA 94404, US
(74) Tollervey, Rebecca Marie, et al, Mewburn Ellis LLP, 33 Gutter Lane, London, EC2V 8AS, GB

**(51) (7)** **EP 1755384** *
A 01N 25/28
(23) 30.11.2010.
(30) US 14.06.2004. 579335 P
(86) PCT/US2005020072 07.06.2005.
(96) EP 05758851.9 07.06.2005. En
(87) WO2005122758 29.12.2005. 200552
(97) EP 1755384 28.02.2007. 200709 En
(41) 25.05.2011. 201121
**(54) MICROCAPSULES HAVING ACTIVATED RELEASE OF CORE MATERIAL THEREIN**
(71) Monsanto Technology, LLC, 800 North Lindbergh Boulevard, St. Louis, MO 63167, US
(72) SEITZ, Michael E., Monsanto Technology LLC, 800 N. Lindbergh Blvd., St. Louis, MO 63167, US;
BRINKER, Ronald J., Monsanto Technology LLC, 800 N. Lindbergh Blvd., St. Louis, MO 63167, US
(74) Bosch, Henry, et al, Office Hanssens Colens, Square Marie-Louise, 40 bte 19, 1000 Bruxelles, BE

**(51) (8)** **EP 1879454** *
***A 01N 35/04***
(23) 17.12.2010.
(30) EP 07.05.2005. 05009999
(86) PCT/EP2006003968 28.04.2006.
(96) EP 06724631.4 28.04.2006. En
(87) WO2006119876 16.11.2006. 200646
(97) EP 1879454 23.01.2008. 200804 En
(41) 08.06.2011. 201123
**(54) PESTICIDAL SUBSTITUTED PHENYLETHERS**

(71) Merial Ltd., 3239 Satellite Blvd., Duluth, GA 30096-4640, US
(72) SCHNATTERER, Stefan, Schillerring 10, 65795 Hattersheim, DE;
MAIER, Michael, Neu Zeilsheim 78, 65931 Frankfurt, DE;
LOCHHAAS, Friederike, Am Flurrasen 33, 36341 Lauterbach, DE;
KNAUF, Werner, Petronellastr. 25 D, 76887 Bad Bergzabern, DE;
SEEGER, Karl, Schwalbenweg 9, 65719 Hofheim, DE
(74) Clyde-Watson, Zöe, et al, D Young & Co LLP, 120 Holborn, London EC1N 2DY, GB

**(51) (7)** **EP 1742534** *
A 01N 43/04
A 61K 31/70
(23) 04.05.2011.
(30) US 07.04.2004. 560128 P
(86) PCT/US2005011739 07.04.2005.
(96) EP 05778582.6 07.04.2005. En
(87) WO2005116086 08.12.2005. 200549
(97) EP 1742534 17.01.2007. 200703 En
(41) 15.06.2011. 201124
**(54) GLUCOSAMINE AND GLUCOSAMINE/ANTI-INFLAMMATORY MUTUAL PRODRUGS, COMPOSITIONS, AND METHODS**
(71) THE UNIVERSITY OF GEORGIA RESEARCH FOUNDATION, INC., Boyd Graduate Studies Research Center, Athens, GA 30602-7411, US
(72) CAPOMACCHIA, Anthony, C., 2326 Elder Road, Bishop, GA 30621, US;
GARNER, Solomon, T., Jr., 250 Cleveland Road, 205, Bogart, GA 30622, US;
BEACH, J., Warren, 1060 Arbor Lake Walk, Hoschton, GA 30548, US
(74) Miles, John Stephen, Potter Clarkson LLP, Park View House, 58 The Ropewalk, Nottingham NG1 5DD, GB

**(51) (8)** **EP 2061321** *
***A 01N 43/78***
(23) 07.06.2011.
(30) US 22.08.2006. 839118 P
(86) PCT/US2007018511 22.08.2007.
(96) EP 07837168.9 22.08.2007. En
(87) WO2008024364 28.02.2008. 200809
(97) EP 2061321 27.05.2009. 200922 En
(41) 13.07.2011. 201128
**(54) HETEROCYCLIC COMPOUNDS AS SWEETENER ENHANCERS**
(71) Redpoint Bio Corporation, 7 Graphics Drive, Ewing, NJ 08628, US
(72) ATWAL, Karnail, S., One Hunters Ridge Road, Pennington, NJ 08534, US;
BRYANT, Robert, W., 133 Sayre Drive, Princeton, NJ 08540, US;
BAKAJ, IVONa, 13 Hope Valley Drive, Cranbury, NJ 08512, US;
PALMER, Roy, Kyle, 21 Brainerd Drive, Cranbury, NJ 08512, US;
CERNE, Rok, 1518 White Pine Circle, Lawrenceville, New Jersey 08648, US
(74) Korn, Richard Mervyn, et al, Potter Clarkson LLP, Park View House, 58 The Ropewalk, Nottingham, NG1 5DD, GB

**(51) (8)** **EP 2096925** *
***A 01N 57/12***
***A 01N 59/06***
***A 01N 51/00***
***A 01N 47/40***
***A 01P 3/00***
***A 01P 7/04***
(23) 07.12.2010.
(30) EP 22.12.2006. 06127177
(86) PCT/EP2007064429 21.12.2007.
(96) EP 07858044.6 21.12.2007. En
(87) WO2008077930 03.07.2008. 200827
(97) EP 2096925 09.09.2009. 200937 En
(41) 25.05.2011. 201121
**(54) PESTICIDE COMPOSITION COMPRISING FOSETYL-ALUMINIUM AND AN INSECTICIDE ACTIVE SUBSTANCE**
(71) Bayer CropScience AG, Alfred-Nobel-Strasse 50, 40789 Monheim am Rhein, DE
(72) HUNGENBERG, Heike, Louveciennesstrasse 2a, 40764 Langenfeld, DE;
THIELERT, Wolfgang, Buschweg 69, 51519 Odenthal, DE;
VAN DEN EYNDE, Koen, Vijlststraat 3, B-1785 Merchtem, BE
(74) Nowak, Alexander, Bayer CropScience AG, Business Planning and Administration, Law and Patents, Patents and Licensing, Alfred-Nobel-Strasse 50, 40789 Monheim, DE

**(51) (8)** **EP 2052623**
***A 23C 11/10***
***A 23J 3/16***
(23) 16.12.2010.
(96) EP 07020940.8 25.10.2007. De
(97) EP 2052623 29.04.2009. 200918 De
(41) 15.06.2011. 201124
**(54) Method and facility for continuous manufacture of foodstuffs made of pulses**
(71) Mona Sojaland GmbH, Otto-Hahn-Strasse 10, 19061 Schwerin, DE
(72) Wild, Hans-Peter, Rudolf-Wild-Strasse 107-115, 69214 Eppelheim, DE;
Sass. Matthias, Ernst-Barlach-Strasse 103, 68723 Oftersheim, DE;
Ringer, Christian, Bornhövedstrasse 17, 19055 Schwerin, DE
(74) Hübscher, Helmut, et al, Patentanwaltskanzlei Hübscher, Spittelwiese 7, 4021 Linz, AT

**(51) (7)** **EP 1734834** *
A 23J 1/12
A 23L 1/05
B 01D 3/34
C 12P 7/06
C 12P 7/14
(23) 02.11.2010.
(30) US 06.04.2004. 560099 P
(86) PCT/US2005011428 06.04.2005.
(96) EP 05732487.3 06.04.2005. En
(87) WO2005099476 27.10.2005. 200543
(97) EP 1734834 27.12.2006. 200652 En
(41) 08.06.2011. 201123
**(54) IMPROVED DISTILLATION PROCESS**
(71) Novozymes North America, Inc., 77 Perry Chapel Church Road, Franklinton, NC 27525, US;

Broin and Associates, Inc., 2209 East 57th Street N., Sioux Falls, SD 57104, US
(72) WENGER, Kevin S., 419 Green Turret DR., Rolesville, North Carolina 27571, US;
ALLAIN, Eric, 925 Barnford Mill Rd., Wake Forest, North Carolina 27587, US;
LEWIS, Stephen M., 3400 Jesse James Circle SE, Sioux Falls, South Dakota 57103, US;
FINCK, John Michael, 41079 292nd Street, Tripp, South Dakota 57376, US;
ROTH, Debbie Lynn, 27862 424th Avenue, Olivet, South Dakota 57052, US
(74) Kofoed, Gertrud Sonne, et al, Novozymes A/S, Patents, Krogshoejvej 36, 2880 Bagsvaerd, DK

**(51) (8)** **EP 1981356 ***
***A 23L 1/00***
***A 23D 9/05***
***A 23C 9/16***
(23) 23.12.2010.
(30) EP 02.02.2006. 06002175
(86) PCT/EP2007051014 02.02.2007.
(96) EP 07726291.3 02.02.2007. En
(87) WO2007088195 09.08.2007. 200732
(97) EP 1981356 22.10.2008. 200843 En
(41) 06.07.2011. 201127
**(54) IMPROVEMENT OF COLD LIQUID SOLUBILITY OF FAT-CONTAINING POWDERS**
(71) Nestec S.A., Avenue Nestlé 55, 1800 Vevey, CH
(72) ZELTNER, Peter, Altikofenstrasse 127, CH-3048 Worblaufen, CH;
NIEDERREITER, Gerhard, Mosshausstr. 8, CH-3510 Konolfingen, CH;
WYSS, Heinz, Chisenmattweg 12, CH-3672 Oberdiessbach, CH
(74) Cogniat, Eric Jean Marie, et al, Nestec S.A., Avenue Nestlé 55, 1800 Vevey, CH

**(51) (8)** **EP 1909597 ***
***A 23L 1/22***
***A 23L 1/227***
***A 23L 1/29***
***A 23L 1/237***
(23) 31.12.2010.
(30) US 20.06.2005. 155738
(86) PCT/US2006023875 20.06.2006.
(96) EP 06773574.6 20.06.2006. En
(87) WO2007002015 04.01.2007. 200701
(97) EP 1909597 16.04.2008. 200816 En
(41) 22.06.2011. 201125
**(54) COMPOSITIONS AND METHODS FOR PRODUCING FLAVORED SEASONINGS THAT CONTAIN REDUCED QUANTITIES OF COMMON SALT**
(71) Redpoint Bio Corporation, 7 Graphics Drive, Ewing, NJ 08628, US
(72) SALEMME, Francis Raymond, 1970 Timber Lakes Drive, Yardley, PA 19067, US;
BAKAL, Abraham I., 8603 Winchester Avenue, Margate, NJ 08402, US;
BARNDT, Richard, 129 North 8th Avenue, Highland Park, NJ 08904, US
(74) Pilkington, Stephanie Joan, Potter Clarkson LLP, Park View House, 58 The Ropewalk, Nottingham, NG1 5DD, GB

**(51) (8)** **EP 1898708 ***
***A 23L 1/229***
***A 23L 1/237***
***A 23L 1/227***
***A 61K 33/00***
***A 23L 1/22***
***A 61K 33/14***
(23) 04.01.2011.
(30) US 20.06.2005. 155745
(86) PCT/US2006023874 20.06.2006.
(96) EP 06773573.8 20.06.2006. En
(87) WO2007002014 04.01.2007. 200701
(97) EP 1898708 19.03.2008. 200812 En
(41) 22.06.2011. 201125
**(54) COMPOSITIONS AND METHODS FOR PRODUCING A SALTY TASTE IN FOODS OR BEVERAGES**
(71) Redpoint Bio Corporation, 7 Graphics Drive, Ewing, NJ 08628, US
(72) SALEMME, Francis Raymond, 1970 Timber Lakes Drive, Yardley, PA 19067, US;
BARNDT, Richard, 129 North 8th Avenue, Highland Park, NJ 08904, US
(74) Pilkington, Stephanie Joan, et al, Potter Clarkson LLP, Park View House, 58 The Ropewalk, Nottingham, NG1 5DD, GB

**(51) (8)** **EP 1981361 ***
***A 23L 1/30***
(23) 15.12.2010.
(30) US 07.02.2006. 771003 P
US 06.02.2007. 671757
(86) PCT/US2007003278 07.02.2007.
(96) EP 07763379.0 07.02.2007. En
(87) WO2007092509 16.08.2007. 200733
(97) EP 1981361 22.10.2008. 200843 En
(41) 22.06.2011. 201125
**(54) DIETARY SUPPLEMENT COMPOSITION FOR BLOOD LIPID HEALTH**
(71) U.S. Nutraceuticals LLC dba Valensa International, 2751 Nutra Lane, Eustis, FL 32726, US
(72) EVANS, David A., 933 Hampton Court, Edmonton, Alberta T6R 2S2, CA;
HILL, W. Stephen, 2751 Nutra Lane, Eustis, Florida 32726, US
(74) Cornish, Kristina Victoria Joy, et al, Kilburn & Strode LLP, 20 Red Lion Street, London, WC1R 4PJ, GB

**(51) (8)** **EP 1781125 ***
***A 24B 15/16***
***A 24F 47/00***
***G 01N 30/72***
***G 01N 30/10***
(23) 04.01.2011.
(30) US 15.06.2004. 868126
(86) PCT/US2005020406 09.06.2005.
(96) EP 05759387.3 09.06.2005. En
(87) WO2006002001 05.01.2006. 200601
(97) EP 1781125 09.05.2007. 200719 En
(41) 06.07.2011. 201127

**(54) ULTRA-FINE PARTICLE CATALYSTS FOR CARBONACEOUS FUEL ELEMENTS**
(71) R.J. REYNOLDS TOBACCO COMPANY, Bowman Gray Technical Center, 950 Reynolds Boulevard, Winston-Salem, NC 27102, US
(72) BANERJEE, Chandra, Kumar, 7636 Penland Drive, Clemmons, NC27012, US;
SEARS, Stephen, Benson, 4343 Old U.S. Highway 421 North, Siler City, NC 27344, US;
CASH, Sheila, Lynnette, 807 Valley Oak Drive, Greensboro, NC 27406, US;
CHUNG, Henry, Hsiao, Liang, 128 Broadmoor Drive, Advance, NC 27006, US
(74) Hoeger, Stellrecht & Partner Patentanwälte, Uhlandstrasse 14c, 70182 Stuttgart, DE

**(51) (8)** **EP 1931224 ***
***A 24B 15/28***
***A 24D 1/00***
(23) 10.12.2010.
(30) US 30.09.2005. 722033 P
(86) PCT/IB2006003857 29.09.2006.
(96) EP 06831841.9 29.09.2006. En
(87) WO2007036814 05.04.2007. 200714
(97) EP 1931224 18.06.2008. 200825 En
(41) 22.06.2011. 201125
**(54) FLAVOURED CIGARETTE**
(71) Philip Morris Products S.A., Quai Jeanrenaud 3, 2000 Neuch?tel, CH
(72) BECKER, Ulrike, 5624 Lake Crest Way, Richmond VA 23227, US;
HOWELL, Tony, 3130 Winterfield Road, Midlothian, VA 23113, US;
XUE, Lixin, 14307 Huntgate Woods Road, Midlothian, VA 23112, US;
KARLES, Georgios, D., 4025 Huntsteed Way, Richmond, VA 23233, US;
FOURNIER, Jay, A., 11771 Wexwood Drive, Richmond, VA 23236, US
(74) Marlow, Nicholas Simon, Reddie & Grose, 16 Theobalds Road, London, WC1X 8PL, GB

**(51) (8)** **EP 2148603 ***
***A 47K 13/24***
(23) 02.11.2010.
(30) HU 25.04.2007. 0700307
HU 15.04.2008. 0800246
(86) PCT/HU2008000035 22.04.2008.
(96) EP 08737286.8 22.04.2008. En
(87) WO2008132523 06.11.2008. 200845
(97) EP 2148603 03.02.2010. 201005 En
(41) 25.05.2011. 201121
**(54) TOILET SEAT PROVIDED WITH BODY WEIGHT METER**
(71) Balance King Kft., Dalos u. 7., 1188 Budapest, HU
(72) NAGY, Zoltan, Dalos u. 7, 1188 Budapest, HU
(74) Erdély, Péter, Danubia Patent and Law Office LLC, POB 198, 1368 Budapest, HU

**(51) (8)** **EP 1980193**
***A 47L 15/42***
(23) 01.12.2010.
(96) EP 08104236.8 30.05.2006. En
(97) EP 1980193 15.10.2008. 200842 En
(41) 25.05.2011. 201121
**(54) Method for cleaning the filter of a dishwasher and dishwasher for carrying out the same**
(71) Electrolux Home Products Corporation N.V., Raketstraat 40, 1130 Brussels, BE
(72) Alessandrelli, Roberto, Via Monte San Genesio 27/7, 20158 Milano, IT;
Brambilla, Enrico, Via Treviso 31, 20127 Milano, IT
(74) Röder, Richard, Electrolux Rothenburg GmbH, Factory and Development, 90327 Nürnberg, DE

**(51) (8)** **EP 1887964 ***
***A 61C 13/34***
***A 61C 9/00***
***A 61C 13/00***
(23) 04.01.2011.
(30) US 10.06.2005. 150849
(86) PCT/US2006022170 07.06.2006.
(96) EP 06760724.2 07.06.2006. En
(87) WO2006135645 21.12.2006. 200651
(97) EP 1887964 20.02.2008. 200808 En
(41) 29.06.2011. 201126
**(54) DENTAL MODELING ASSEMBLY AND METHODS**
(71) Huffman, Ronald E., P.O. Box 68440, Oro Valley, AZ 85737, US
(72) Huffman, Ronald E., P.O. Box 68440, Oro Valley, AZ 85737, US
(74) Lotti, Giorgio, Corso Vittorio Emanuele II 61, 10128 Torino, IT

**(51) (8)** **EP 2015710 ***
***A 61F 2/44***
(23) 01.12.2010.
(30) US 11.05.2006. 747081 P
(86) PCT/AU2007000626 10.05.2007.
(96) EP 07718873.8 10.05.2007. En
(87) WO2007131265 22.11.2007. 200747
(97) EP 2015710 21.01.2009. 200904 En
(41) 08.06.2011. 201123
**(54) IMPLANTING A TISSUE PROSTHESIS**
(71) Columna Pty Ltd, ACN 114 967 887, 53 Montgomery Street, Kogarah, NSW 2217, AU
(72) MILIJASEVIC, Zoran, 5 Jacquelene Close, Bayview, NSW 2104, AU;
DIWAN, Ashish, 5105/343-357 Pitt Street, Sydney, NSW 2000, AU
(74) Carter, Stephen John, et al, Mewburn Ellis LLP, 33 Gutter Lane, London, EC2V 8AS, GB

**(51) (8)** **EP 2020962 ***
***A 61F 2/44***
(23) 01.12.2010.
(30) US 19.05.2006. 747722 P
(86) PCT/AU2007000679 18.05.2007.
(96) EP 07718925.6 18.05.2007. En
(87) WO2007134374 29.11.2007. 200748
(97) EP 2020962 11.02.2009. 200907 En
(41) 01.06.2011. 201122
**(54) A TISSUE PROSTHESIS**
(71) Columna Pty Ltd, ACN 114 967 887, 53 Montgomery Street, Kogarah, NSW 2217, AU

(72) DIWAN, Ashish, 5105/343-357 Pitt Street, Sydney, NSW 2104, AU;
MILIJASEVIC, Zoran, 5 Jacquelene Close, Bayview, NSW 2104, AU
(74) Carter, Stephen John, et al, Mewburn Ellis LLP, 33 Gutter Lane, London, EC2V 8AS, GB

**(51) (8)** **EP 1807029 ***
***A 61F 6/04***
(23) 01.12.2010.
(30) US 06.05.2005. 678824 P
US 06.05.2005. 678825 P
US 21.07.2005. 700853 P
(86) PCT/US2006017792 08.05.2006.
(96) EP 06759353.3 08.05.2006. En
(87) WO2006122062 16.11.2006. 200646
(97) EP 1807029 18.07.2007. 200729 En
(41) 25.05.2011. 201121
**(54) MALE STIMULATING CONTRACEPTIVES**
(71) Reddy, Alla V. K., 9 Webster Court, Plainsboro, New Jersey 08536, US;
Alla, Ravikumar Reddy, 9 Webster Court, Plainsboro, New Jersey 08536, US;
Alla, Madhusudhan Reddy, 9 Webster Court, Plainsboro, New Jersey 08536, US;
Alla, Raghunatha Reddy, 9 Webster Court, Plainsboro, New Jersey 08536, US
(72) Reddy, Alla V. K., 9 Webster Court, Plainsboro, New Jersey 08536, US;
Alla, Ravikumar Reddy, 9 Webster Court, Plainsboro, New Jersey 08536, US;
Alla, Madhusudhan Reddy, 9 Webster Court, Plainsboro, New Jersey 08536, US;
Alla, Raghunatha Reddy, 9 Webster Court, Plainsboro, New Jersey 08536, US
(74) Clark, Jane Anne, et al, Mathys & Squire LLP, 120 Holborn, London EC1N 2SQ, GB

**(51) (8)** **EP 1877023 ***
***A 61J 1/00***
(23) 01.12.2010.
(30) NZ 05.05.2005. 53985405
(86) PCT/NZ2006000095 05.05.2006.
(96) EP 06747673.9 05.05.2006. En
(87) WO2006118479 09.11.2006. 200645
(97) EP 1877023 16.01.2008. 200803 En
(41) 29.06.2011. 201126
**(54) DISPENSING DEVICE**
(71) Myozone Limited, O'Carroll Road, Maungakaramea, Northland 240, NZ
(72) STOLLMANN, Sophia-Konstantina, 12 Pearce Street, Double Bay, Sydney, New South Wales 2028, AU;
SNELLING, Paul Douglas, O'Carroll Road, Maungakaramea, Northland, 240, NZ
(74) Miller, James Lionel Woolverton, et al, Kilburn & Strode LLP, 20 Red Lion Street, London WC1R 4PJ, GB

**(51) (8)** **EP 1962777 ***
***A 61K 8/26***
***A 61K 8/37***
***A 61K 8/34***
***A 61Q 15/00***
(23) 13.02.2011.
(30) DE 16.12.2005. 102005060788
(86) PCT/EP2006067561 19.10.2006.
(96) EP 06807392.3 19.10.2006. De
(87) WO2007071474 28.06.2007. 200726
(97) EP 1962777 03.09.2008. 200836 De
(41) 29.06.2011. 201126
**(54) IMPROVED LONG-TERM EFFECT OF ANTIPERSPIRANTS**
(71) Beiersdorf Aktiengesellschaft, Unnastrasse 48, 20253 Hamburg, DE
(72) TERSTEGEN, Lara, Heckscherstrasse 2, 20253 Hamburg, DE;
WILKE, Katrin, Mansteinstrasse 29, 20253 Hamburg, DE;
BIEL, Stefan, Albert-Schäfer-Weg 15, 21077 Hamburg, DE;
WEPF, Roger, Im Tüllacker 2, 8610 Uster, CH

**(51) (8)** **EP 1888030 ***
***A 61K 9/08***
***A 61K 9/00***
***A 61K 31/35***
(23) 01.12.2010.
(30) EP 25.05.2005. 05104491
US 14.06.2005. 690391 P
(86) PCT/EP2006062518 23.05.2006.
(96) EP 06755288.5 23.05.2006. En
(87) WO2006125774 30.11.2006. 200648
(97) EP 1888030 20.02.2008. 200808 En
(41) 29.06.2011. 201126
**(54) PEDIATRIC FORMULATION OF TOPIRAMATE**
(71) Janssen Pharmaceutica NV, Turnhoutseweg 30, 2340 Beerse, BE
(72) FRANÇOIS, Marc, Karel, Jozef, c/o Janssen Pharmaceutica N.V. Turnhoutseweg 30, B-2340 Beerse, BE;
DRIES, Willy, Maria, Albert, Carlo, c/o Janssen Pharmaceutica N.V. Turnhoutseweg 30, B-2340 Beerse, BE;
EMBRECHTS, Roger, Carolus, Augusta, c/o Janssen Pharmaceutica N.V. Turnhoutseweg 30, B-2340 Beerse, BE
(74) Vervoort, Liesbeth, et al, Janssen Pharmaceutica N.V., Turnhoutseweg 30, 2340 Beerse, BE

**(51) (7)** **EP 1689364 ***
A 61K 9/127
(23) 22.12.2010.
(30) US 20.11.2003. 523316 P
(86) PCT/CA2004002002 22.11.2004.
(96) EP 04818742.1 22.11.2004. En
(87) WO2005048986 02.06.2005. 200522
(97) EP 1689364 16.08.2006. 200633 En
(41) 08.06.2011. 201123
**(54) STABLE LIPOSOME COMPOSITIONS COMPRISING LIPOPHILIC AMINE CONTAINING PHARMACEUTICAL AGENTS**
(71) YM Biosciences Inc., 5045 Orbitor Drive, Bldg. 11, Suite 400, Mississauga, ON L4W 4Y4, CA
(72) PLIURA, Diana, Helen, 5032 Brandy Lane Court, Mississauga, Ontario L5M 5A2, CA;
RISTEVSKI, Blagoja, 2094 Shady Glen Road, Oakville, Ontario L6M 3P1, CA;
BOYLAN, James, Charles, 16798 Orchard Valley Drive, Gurnee, Illinois 60013, US;
LI, Hong, 26 Culture Crescent, Brampton, Ontario L6X 4V4, CA

(74) Beyer, Andreas, et al, Wuesthoff & Wuesthoff, Patent- und Rechtsanwälte, Schweigerstrasse 2, 81541 München, DE

**(51) (8)** **EP 1806129**
***A 61K 9/14***
***A 61K 9/10***
***A 61K 9/16***
***A 61K 9/20***
***A 61K 9/48***
***A 61K 47/26***
***A 61K 47/40***
(23) 15.04.2011.
(30) JP 01.10.2004. 2004289680
(86) PCT/JP2005018099 30.09.2005.
(96) EP 05787703.7 30.09.2005. Ja
(87) WO2006038552 13.04.2006. 200615
(97) EP 1806129 11.07.2007. 200728 En
(41) 29.06.2011. 201126
**(54) COMPOSITION CONTAINING FINE PARTICLES AND PROCESS FOR PRODUCING THE SAME**
(71) Eisai R&D Management Co., Ltd., 6-10, Koishikawa 4-chome, Bunkyo-ku, Tokyo 112-8088, JP
(72) UEKI, Yosuke, c/o Kawashima Industrial Complex, Eisai Co., Ltd., 1, Kawashimatakehaya-machi, Kakamigahara-shi, Gifu 5016195, JP
(74) Smyth, Gyles Darren, Marks & Clerk LLP, 90 Long Acre, London, WC2E 9RA, GB

**(51) (8)** **EP 1845946 ***
***A 61K 9/14***
(23) 07.02.2011.
(30) US 10.02.2005. 651210 P
(86) PCT/GB2006000481 10.02.2006.
(96) EP 06709718.8 10.02.2006. En
(87) WO2006085101 17.08.2006. 200633
(97) EP 1845946 24.10.2007. 200743 En
(41) 29.06.2011. 201126
**(54) PHARMACEUTICAL COMPOSITIONS USEFUL IN THE TRANSMUCOSAL ADMINISTRATION OF DRUGS**
(71) Orexo AB, Box 303, 751 05 Uppsala, SE
(72) NYSTRÖM, Christer, Dept. of Pharmacy, Uppsala University, Box 580, S-751 23 Uppsala, SE;
FRANSÉN, Nelly, Dept. of Pharmacy, Uppsala University, Box 580, S-751 23 Uppsala, SE;
BJÖRK, Erik, Dept. of Pharmacy, Uppsala University, Box 580, S-751 23 Uppsala, SE
(74) McNeeney, Stephen Phillip, et al, Potter Clarkson LLP, Park View House, 58 The Ropewalk, Nottingham, NG1 5DD, GB

**(51) (8)** **EP 1886670**
***A 61K 9/16***
***A 61K 9/20***
***A 61K 31/13***
(23) 19.10.2010.
(30) US 05.07.2006. 818823 P
(96) EP 06254865.6 20.09.2006. En
(97) EP 1886670 13.02.2008. 200807 En
(41) 08.06.2011. 201123
**(54) Pharmaceutical compositions of memantine**
(71) Teva Pharmaceutical Industries Ltd, 5 Basel Street, PO Box 3190, 49131 Petah Tiqva, IL
(72) Hrakovsky, Julia, Mizva Uvda Street, 6/4, Rosh Ha-Ayin 48057, IL;
Sebban, Hagit, Haliya Street, 5/B, Acco 24662, IL
(74) Russell, Tim, et al, D Young & Co LLP, 120 Holborn, London EC1N 2DY, GB

**(51) (8)** **EP 2079449 ***
***A 61K 9/20***
***A 61K 31/325***
***A 61K 47/02***
(23) 13.01.2011.
(30) US 13.10.2006. 829342 P
(86) PCT/US2007080675 08.10.2007.
(96) EP 07843957.7 08.10.2007. En
(87) WO2008048801 24.04.2008. 200817
(97) EP 2079449 22.07.2009. 200930 En
(41) 06.07.2011. 201127
**(54) PHENYLALKYLAMINO CARBAMATE COMPOSITIONS**
(71) Janssen Pharmaceutica N.V., Turnhoutseweg 30, 2340 Beerse, BE
(72) PANDEY, Ramendra N., 491 Winding Brook Way, Bridgewater, New Jersey 08807, US;
MASCARO, Tracey, 2932 Denbeigh Drive, Hatfield, Pennsylvania 19440, US;
RAILKAR, Aniruddha M., 1214 Joseph Road, Ambler, Pennsylvania 19002, US;
MCCOOL, James, 2026 Old Route 309, Sellersville, Pennsylvania 18960, US;
CLARK, Hinton, 60 North Dover Avenue, Somerset, New Jersey 08873, US;
ALTAN, Stanley, 1917 Arlington Avenue, North Brunswick, New Jersey 08902, US
(74) Warner, James Alexander, et al, Carpmaels & Ransford, One Southampton Row, London, WC1B 5HA, GB

**(51) (8)** **EP 2089002 ***
***A 61K 9/20***
***A 61K 31/325***
***A 61K 47/02***
(23) 13.01.2011.
(30) US 13.10.2006. 829355 P
(86) PCT/US2007080677 08.10.2007.
(96) EP 07843959.3 08.10.2007. En
(87) WO2008048802 24.04.2008. 200817
(97) EP 2089002 19.08.2009. 200934 En
(41) 06.07.2011. 201127
**(54) PHENYLALKYL CARBAMATE COMPOSITIONS**
(71) Janssen Pharmaceutica N.V., Turnhoutseweg 30, 2340 Beerse, BE;
Mccool, James, 2026 Old Route 309, Sellersville, Pennsylvania 18960, US
(72) MCCOOL, James, 2026 Old Route 309, Sellersville, Pennsylvania 18960, US;
PANDEY, Ramendra N., 491 Winding Brook Way, Bridgewater, New Jersey 08807, US;
MASCARO, Tracey, 2932 Denbeigh Drive, Hatfield, Pennsylvania 19440, US;
MCDOWELL, Ronnie, 117 Marilyn Court, Union, New Jersey 07083, US;
TROISI, John, 449 Whiton Road, Neshanic Station, New Jersey 08853, US;

ALTAN, Stanley, 1917 Arlington Avenue, North Brunswick, New Jersey 08902, US
(74) Warner, James Alexander, et al, Carpmaels & Ransford, One Southampton Row, London, WC1B 5HA, GB

**(51) (8)** **EP 1894560**
***A 61K 9/26***
***A 61K 9/32***
***A 61K 31/395***
***A 61K 31/4164***
(23) 01.12.2010.
(30) IT 25.06.2004. MI20041295
(96) EP 07122775.5 03.05.2005. En
(97) EP 1894560 05.03.2008. 200810 En
(41) 01.06.2011. 201122
**(54) Oral antimicrobial pharmaceutical compositions comprising metronidazole**
(71) Cosmo Technologies Ltd, 2, Duncairn Terrace, Bray, Wicklow, IE
(72) Aiani, Mauro, COSMO SPA, Via C. Colombo 1, I-20020, LAINATE (MILANO), IT;
Bozzella, Roberta, COSMO SPA, Via C. Colombo 1, I-20020, LAINATE (MILANO), IT;
Celasco, Giuseppe, COSMO SPA, Via C. Colombo 1, I-20020, LAINATE (MILANO), IT;
Villa, Roberto, COSMO SPA, Via C. Colombo 1, I-20020, LAINATE (MILANO), IT
(74) Pistolesi, Roberto, et al, Dragotti & Associati Srl, Via Marina 6, 20121 Milano, IT

**(51) (8)** **EP 1884233**
***A 61K 9/44***
***B 41M 5/26***
(23) 13.05.2011.
(30) JP 26.05.2005. 2005154745
(86) PCT/JP2006310301 24.05.2006.
(96) EP 06756507.7 24.05.2006. Ja
(87) WO2006126561 30.11.2006. 200648
(97) EP 1884233 06.02.2008. 200806 En
(41) 22.06.2011. 201125
**(54) METHOD OF MARKING COMPOSITION FOR ORAL ADMINISTRATION**
(71) Eisai R&D Management Co., Ltd., 6-10, Koishikawa 4-chome, Bunkyo-ku, Tokyo 112-8088, JP
(72) MOMOI, Kazuhisa, EISAI CO., LTD., 1, Kawashimatakehaya-machi, Kakamigahara-shi, Gifu 5016195, JP
(74) HOFFMANN EITLE, Patent- und Rechtsanwälte, Arabellastraße 4, 81925 München, DE

**(51) (7)** **EP 1720527 ***
A 61K 9/50
A 61K 31/4439
(23) 01.12.2010.
(30) US 03.03.2004. 549653 P
(86) PCT/US2005006589 02.03.2005.
(96) EP 05724184.6 02.03.2005. En
(87) WO2005092297 06.10.2005. 200540
(97) EP 1720527 15.11.2006. 200646 En
(41) 25.05.2011. 201121
**(54) A STABLE PHARMACEUTICAL COMPOSITION COMPRISING AN ACID LABILE DRUG**
(71) Teva Pharmaceutical Industries Ltd, 5 Basel Street, PO Box 3190, 49131 Petah Tiqva, IL
(72) DI CAPUA, Simona, Kfar saba, Enej Ayalon, 8/4 Israel, IL;
SHTERMAN, Nava, Alexander Zeid 14, 49214 Petach Tikva, IL;
PARDO, Limor, Ari, 42870 Beit Halevi, IL;
ITACH, Esther, 42308 Natania, Itamar Ben Avi 55/5, IL
(74) Gallagher, Kirk James, et al, D Young & Co LLP, 120 Holborn, London EC1N 2DY, GB

**(51) (7)** **EP 1705988 ***
A 61K 31/00
A 61K 31/454
A 61P 25/00
(23) 01.03.2011.
(30) US 30.12.2003. 533862 P
(86) PCT/US2004043924 27.12.2004.
(96) EP 04815914.9 27.12.2004. En
(87) WO2005065455 21.07.2005. 200529
(97) EP 1705988 04.10.2006. 200640 En
(41) 13.07.2011. 201128
**(54) IMMUNOMODULATORY COMPOUNDS FOR THE TREATMENT OF CENTRAL NERVOUS SYSTEM DISORDERS**
(71) CELGENE CORPORATION, 86 Morris Avenue, Summit, NJ 07901, US
(72) ZELDIS, Jerome, B., 157 Christopher Drive, Princeton, NJ 08540, US;
SCHAFER, Peter, H., 126 John E. Busch Avenue, Somerset, NJ 08873, US;
FALECK, Herbert, 19 Lakeview Drive, West Orange, NJ 07052, US
(74) Jones Day, Rechtsanwälte, Attorneys-at-Law, Patentanwälte, Prinzregentenstrasse 11, 80538 München, DE

**(51) (8)** **EP 1986623 ***
***A 61K 31/133***
***A 61K 31/661***
***A 61P 25/02***
(23) 01.12.2010.
(30) US 27.01.2006. 762589 P
(86) PCT/US2007002422 29.01.2007.
(96) EP 07717121.3 29.01.2007. En
(87) WO2007089715 09.08.2007. 200732
(97) EP 1986623 05.11.2008. 200845 En
(41) 25.05.2011. 201121
**(54) METHOD FOR TREATMENT OF NEUROPATHIC PAIN**
(71) UNIVERSITY OF VIRGINIA PATENT FOUNDATION, 250 West Main Street, Suite 300, Charlottesville, VA 22902, US
(72) LYNCH, Kevin, R., 1632 Meadowbrook Heights Road, Charlottesville, VA 22901, US;
MACDONALD, Timothy, L., 200 Douglas Avenue, Unit 3b, Charlottesville, VA 22902, US
(74) McNab, Donald C., Marks & Clerk LLP, Aurora, 120 Bothwell Street, Glasgow, G2 7JS, GB

**(51) (8)** **EP 2314292**
***A 61K 31/277***
***A 61K 31/55***
***A 61P 33/00***
***A 61P 33/10***
(23) 29.04.2011.
(96) EP 09173525.8 20.10.2009. En
(97) EP 2314292 27.04.2011. 201117 En
(41) 08.06.2011. 201123
**(54) Endoparasiticidal compositions**
(71) Novartis AG, Lichtstrasse 35, 4056 Basel, CH
(72) Kaminsky, Ronald, Joressens, 1789Lugnorre, CH; Little, Andrew, c/o Novartis Animal Health, inc., Schwarzwaldallee, 215, Postfach, 4002 Basel, CH; Redpath, Arthur, Auf den Felsen 37, 4114 Hofstetten, CH; Schorderet Weber, Sandra, Sablons 30, 2000 Neuch?tel, CH
(74) Liphardt, Bernd, et al, Novartis Animal Health, Inc., Patent and Trademark Group, Werk Rosenthal, 4002 Basel, CH

**(51) (7)** **EP 1720541 ***
A 61K 31/343
A 61P 25/06
(23) 28.12.2010.
(30) US 17.02.2004. 545710 P
(86) PCT/US2005005111 17.02.2005.
(96) EP 05723234.0 17.02.2005. En
(87) WO2005079787 01.09.2005. 200535
(97) EP 1720541 15.11.2006. 200646 En
(41) 15.06.2011. 201124
**(54) TREATMENT OR PROPHYLAXIS OF MIGRAINE OR HEADACHE DISORDERS USING CITALOPRAM, ESCITALOPRAM OR CITALOPRAM METABOLITES**
(71) SEPRACOR, INC., 84 Waterford Drive, Marlborough, MA 01752, US
(72) BARBERICH, Timothy, 40 Elm Street, Concord, ma 07142, US
(74) Hutchins, Michael Richard, Elkington and Fife LLP, Prospect House, 8 Pembroke Road, Sevenoaks, Kent TN13 1XR, GB

**(51) (8)** **EP 1744744 ***
***A 61K 31/353***
***C 07D 305/14***
***A 61K 31/216***
***A 61P 35/00***
***A 61K 36/53***
(23) 21.10.2010.
(30) US 30.04.2004. 567340 P
(86) PCT/US2005015280 02.05.2005.
(96) EP 05856683.7 02.05.2005. En
(87) WO2006073457 13.07.2006. 200628
(97) EP 1744744 24.01.2007. 200704 En
(41) 22.06.2011. 201125
**(54) BIOACTIVE COMPOUNDS AND METHODS OF USES THEREOF**
(71) Rutgers, The State University of New Jersey, ASB III, 3 Rutgers Plaza, New Brunswick, NJ 08901, US;
The Regents of University of Minnesota, 450 McNamara Alumni Center, 200 Oak Street, S.E., Minneapolis, MN 55455-2070, US;
Wellgen, Inc., 63 Dudley Road, New Brunswick NJ 08901-8520, US
(72) DONG, Zigang, 3406 Tralee Lane Ne, Rochester, Minnesota 55906, US;
BODE, Anne, 6650 296th Street E, Cannon Falls, Minnesota 55009, US;
HO, Chi-tang, 32 Jernee Drive, East Brunswick, New Jersey 08816, US;
BAI, Naisheng, 180 B Cedar Lane, Highland Park, New Jersey, US;
DUSHENKOV, Slavik, 224A Warren Avenue, Fort Lee, New Jersey 07024, US
(74) Peters, Hajo, et al, ZACCO GmbH, Bayerstrasse 83, 80335 München, DE

**(51) (8)** **EP 1835908 ***
***A 61K 31/404***
***A 61P 35/00***
***A 61P 35/04***
(23) 01.07.2010.
(30) IT 23.12.2004. MI20042476
(86) PCT/EP2005013886 22.12.2005.
(96) EP 05849516.9 22.12.2005. En
(87) WO2006066923 29.06.2006. 200626
(97) EP 1835908 26.09.2007. 200739 En
(41) 01.06.2011. 201122
**(54) INDOLE DERIVATIVES WITH ANTITUMOR ACTIVITY**
(71) Cell Therapeutics Europe S.R.L., Via Ariosto, 23, 20091 Bresso, IT
(72) GRUGNI, Mario, Via Ariosto, 23, I-20091 Bresso, IT; CASSIN, Mara, Via Ariosto, 23, I-20091 Bresso, IT; COLELLA, Gennaro, Via Ariosto, 23, I-20091 Bresso, IT; DE MUNARI, Sergio, Via Ariosto, 23, I-20091 Bresso, IT; PARDI, Gianluca, Via Ariosto, 23, I-20091 Bresso, IT; PAVESI, Paolo, Via Ariosto, 23, I-20091 Bresso, IT
(74) Banfi, Paolo, Bianchetti Bracco Minoja S.r.l., Via Plinio, 63, 20129 Milano, IT

**(51) (8)** **EP 1853257 ***
***A 61K 31/4155***
***C 07D 231/12***
(23) 17.05.2011.
(30) US 15.02.2005. 58852
(86) PCT/US2006005236 14.02.2006.
(96) EP 06720749.8 14.02.2006. En
(87) WO2006088903 24.08.2006. 200634
(97) EP 1853257 14.11.2007. 200746 En
(41) 22.06.2011. 201125
**(54) PYRAZOLE COMPOUNDS**
(71) XTL Biopharmaceuticals Limited, 711 Executive Boulevard, Suite Q, Valley Cottage, NY 10989, US
(72) HU, Youhong, 448 Farview St., 1st Fl., Ridgewood, NJ 07450U, US;
XU, Bin, 23 Powder Horn Drive, Wesley Hills, NY 10901, US;
LIAO, Yun, 97 Rock Road, Glen Rock, NJ 07452, US;
NAWOSCHIK, Kenneth, 8 Anthony Drive, Spring Valley, NY 10977, US;
LIU, Yixin, 204 Spring Valley Road, Paramus, NJ 07652, US;
SANDRASAGRA, Anthony, 60 Springwood Ct., Princeton, NJ 08540, US;
FATHI, Reza, 88 Franklin Turnpike, Hohokus, NJ 07423, US;
YANG, Zhen, 521 Jericho Place, Ridgewood, NJ 07540, US

(74) Chung, Hsu Min, et al, Boult Wade Tennant, Verulam Gardens, 70 Gray's Inn Road, London WC1X 8BT, GB

**(51) (8)** **EP 2101768 ***
***A 61K 31/437***
***A 61K 31/4439***
***A 61K 31/553***
***A 61P 25/00***
***C 07D 401/12***
***C 07D 487/06***
(23) 27.11.2010.
(30) FR 05.01.2007. 0700048
(86) PCT/FR2008000014 04.01.2008.
(96) EP 08761738.7 04.01.2008. Fr
(87) WO2008099083 21.08.2008. 200834
(97) EP 2101768 23.09.2009. 200939 Fr
(41) 25.05.2011. 201121
**(54) USE OF NEUROPROTECTIVE COMPOUNDS FOR OBTAINING DRUGS FOR TREATING NEURODEGENERATIVE DISEASES**
(71) Les Laboratoires Servier, 35, rue de Verdun, 92284 Suresnes Cedex, FR
(72) LE RIDANT, Alain, 47-47 bis boulevard du Commandant Charcot, FR-92200 Neuilly Sur Seine, FR;
HARPEY, Catherine, 135, rue du Ranelagh, F-75016 Paris, FR

**(51) (8)** **EP 1824469 ***
***A 61K 31/44***
***A 61K 31/4402***
***A 61K 31/47***
***A 61K 31/196***
***A 61K 31/198***
***A 61P 3/10***
***A 61P 17/06***
***A 61P 25/02***
***A 61P 29/00***
***A 61P 35/00***
***A 61P 35/02***
(23) 07.12.2010.
(30) US 17.11.2004. 628935 P
(86) PCT/AU2005001754 17.11.2005.
(96) EP 05803008.1 17.11.2005. En
(87) WO2006053390 26.05.2006. 200621
(97) EP 1824469 29.08.2007. 200735 En
(41) 25.05.2011. 201121
**(54) A METHOD OF MODULATING B CELL FUNCTIONING**
(71) Nuon Therapeutics Pty Limited, Level 32, ABN AMRO Tower, 88 Phillip Street, Sydney, NSW 2000, AU
(72) SELLEY, Michael Lionel, 19 Holmes Street, Turramurra, New South Wales 2074, AU;
INGLIS, Julia Jane, 25 St. Quintin Road, London E13 9DT, GB;
WILLIAMS, Richard Owen, 2 Sovereign Mews Pearson Street, London E2 8ER, GB
(74) Brasnett, Adrian Hugh, et al, Mewburn Ellis LLP, 33 Gutter Lane, London, EC2V 8AS, GB

**(51) (8)** **EP 2034998 ***
***A 61K 31/44***
(23) 01.12.2010.
(30) US 11.05.2006. 799468 P
US 21.12.2006. 871153 P
(86) PCT/US2007068628 10.05.2007.
(96) EP 07872214.7 10.05.2007. En
(87) WO2008079427 03.07.2008. 200827
(97) EP 2034998 18.03.2009. 200912 En
(41) 25.05.2011. 201121
**(54) 1,2,3,4-TETRAHYDRO-QUINOLINE DERIVATIVES AS CETP INHIBITORS**
(71) Janssen Pharmaceutica, N.V., Turnhoutseweg 30, 2340 Beerse, BE
(72) RANO, Thomas, 16 Laurel Court, Branchburg, NJ 18929, US;
KUO, Gee-Hong, 3 Traveller Way, Scotch Plains, NJ 07076, US;
SIEBER-MCMASTER, Ellen, 777 High Pointe Circle, Langhorne, PA 19047, US;
DEMAREST, Keith, T., 1 Newell Road, Flemington, NJ 08822, US;
PELTON, Patricia, 6 Rice Lane, Long Valley, NJ 07853, US;
WANG, Aihua, 1723 Foxwood Drive, Jamison, PA 18929, US
(74) Warner, James Alexander, et al, Carpmaels & Ransford, One Southampton Row, London, WC1B 5HA, GB

**(51) (8)** **EP 2164491 ***
***A 61K 31/445***
***A 61K 31/4468***
***A 61K 31/453***
***A 61K 31/4535***
***A 61K 31/4545***
***C 07D 211/34***
***C 07D 211/58***
***C 07D 211/96***
***C 07D 405/12***
***C 07D 409/12***
***A 61P 29/00***
***A 61P 31/18***
***A 61P 37/00***
***A 61P 11/06***
***A 61P 11/00***
(23) 09.12.2010.
(30) EP 13.07.2007. 07112470
US 13.07.2007. 959331 P
(86) PCT/EP2008059136 11.07.2008.
(96) EP 08756798.8 11.07.2008. En
(87) WO2009010477 22.01.2009. 200904
(97) EP 2164491 24.03.2010. 201012 En
(41) 01.06.2011. 201122
**(54) PIPERIDINE-4-ACETIC ACID DERIVATIVES AND THEIR USE**
(71) Euroscreen S.A., Route de Lennik 802, 1070 Brussels, BE
(72) HUCK, Jacques, Le Clos du Président, Avenue Georges Pompidou nr 38, F-69003 Lyon, FR;
OOMS, Frédéric, Rue Jean le Brasseur nr 8, B-4280 Hannut, BE;
PARCQ, Julien, 77 rue Jean Bart, F-59300 Valenciennes, FR;
REGEREAU, Yannick, 50 route de Pringy, F-74940 Annecy le Vieux, FR;
HOVEYDA, Hamid, R., Rue Berkendael 124, B-1050 Bruxelles, BE;
DUTHEUIL, Guillaume, Rue du haut Flénu 29C, B-7012 Flenu, BE
(74) Cabinet Plasseraud, 52, rue de la Victoire, 75440 Paris Cedex 09, FR

**(51) (8)** **EP 1734962 ***
***A 61K 31/4709***
***A 61P 25/00***
***A 61P 29/00***
***A 61K 31/49***
(23) 14.09.2010.
(30) US 30.03.2004. 558059 P
US 20.04.2004. 564063 P
(86) PCT/IB2005002613 30.03.2005.
(96) EP 05805035.2 30.03.2005. En
(87) WO2006038070 13.04.2006. 200615
(97) EP 1734962 27.12.2006. 200652 En
(41) 25.05.2011. 201121
**(54) COMPOSITIONS AND METHODS FOR MODULATING GATED ION CHANNELS**
(71) PainCeptor Pharma Corp., 7150, Albert-Einstein, Bureau 100 Saint-Laurent, Québec, H4S 2C1, CA
(72) BABINSKI, Kazimierz, 364 Berkeley Circle, Dorval, Québec H9S 1H4, CA;
SZAREK, Walter A., 165 Ontario Street, Suite 301, Kingston, Ontario K7l 2y6, CA;
VOHRA, Rahul, 67, Piekoff Crs., Kanasta, Ontario K2K 3K7, CA;
VARMING, Thomas, Fredens Plads I, 2920 Charlottenlund, DK;
AHRING, Philip, K., Oesterhegn 20, 2880 Bagsvaerd, DK;
DYHRING JOERGENSEN, Tino, Hoermarken 1, 2680 Solroed Strand, DK;
BLACKBURN-MUNRO, Gordon, John, Sangfuglestien 14, 2.th, 2400 Koebenhavn NV, DK
(74) Clyde-Watson, Zöe, et al, D Young & Co LLP, 120 Holborn, London EC1N 2DY, GB

**(51) (8)** **EP 1833481 ***
***A 61K 31/496***
***C 07D 401/14***
***A 61P 35/00***
(23) 09.11.2010.
(30) US 14.12.2004. 636451 P
(86) PCT/US2005045019 12.12.2005.
(96) EP 05853845.5 12.12.2005. En
(87) WO2006065794 22.06.2006. 200625
(97) EP 1833481 19.09.2007. 200738 En
(41) 29.06.2011. 201126
**(54) FARNESYL PROTEIN TRANSFERASE INHIBITORS AND METHODS FOR TREATING PROLIFERATIVE DISEASES**
(71) Schering Corporation, 2000 Galloping Hill Road, Kenilworth, NJ 07033-0530, US
(72) MALLAMS, Alan, K., 147 King Highway, RR3, Hackettstown, New Jersey 07840-9302, US
(74) Adams, Harvey Vaughan John, et al, Mathys & Squire LLP, 120 Holborn, London, EC1N 2SQ, GB

**(51) (8)** **EP 2023934 ***
***A 61K 31/535***
(23) 01.12.2010.
(30) US 11.05.2006. 799604 P
US 21.12.2006. 871148 P
(86) PCT/US2007068636 10.05.2007.
(96) EP 07783559.3 10.05.2007. En
(87) WO2007134149 22.11.2007. 200747
(97) EP 2023934 18.02.2009. 200908 En
(41) 29.06.2011. 201126
**(54) 3,4-DIHYDRO-2H-BENZO[1,4]OXAZINE AND THIAZINE DERIVATIVES AS CETP INHIBITORS**
(71) Janssen Pharmaceutica N.V., Turnhoutseweg 30, 2340 Beerse, BE
(72) KUO, Gee-hong, 3 Traveller Way, Scotch Plains, NJ 07076, US;
WANG, Aihua, 1723 Foxwood Drive, Jamison, PA 18929, US;
RANO, Thomas, 16 Laurel Court, Branchburg, NJ 08876, US;
PROUTY, Catherine, 236 Windsor Court, Doylestown, PA 18901, US;
DEMAREST, Keith T., 1 Newell Road, Flemington, NJ 08822, US;
PELTON, Patricia, 6 Rice Lane, Long Valley, NJ 07853, US
(74) Warner, James Alexander, et al, Carpmaels & Ransford, One Southampton Row, London, WC1B 5HA, GB

**(51) (7)** **EP 1750719 ***
A 61K 31/541
A 61P 21/00
C 07D 279/02
(23) 01.12.2010.
(30) EP 19.05.2004. 04011894
(86) PCT/EP2005005229 13.05.2005.
(96) EP 05744035.6 13.05.2005. En
(87) WO2005110422 24.11.2005. 200547
(97) EP 1750719 14.02.2007. 200707 En
(41) 08.06.2011. 201123
**(54) TREATMENT OF DISEASES ASSOCIATED WITH ALTERED LEVEL OF AMYLOID BETA PEPTIDES**
(71) Boehringer Ingelheim International GmbH, Binger Strasse 173, 55216 Ingelheim am Rhein, DE;
Boehringer Ingelheim Pharmaceuticals, Inc., 900 Ridgebury Road, Ridgefield, Connecticut 06877, US;
Boehringer Ingelheim Pharma GmbH & Co. KG, Binger Straße 173, 55216 Ingelheim am Rhein, DE
(72) BORNEMANN, Klaus, Rosenweg 1, 89129 SETZINGEN, DE;
TRUMMLITZ, Guenter, Buchenweg 27, 88447 WARTHAUSEN, DE;
LAZER, Edward, S., 46 High Ridge Road, TRUMBULL, CT 06611, US;
MIAO, Clara, K., 10 Crossbow Lane, EASTON, CT 06612, US;
BECK, Bernd, Rammingerstrasse 18, 88400 BIBERACH AN DER RISS, DE;
SAMS-DODD, Frank, c/o Bionomics Ltd Europe, VP Pre-Clinical Research, Les Algorithmes, Rue J.Sapidus Parc d'Innovation, 67400 Illkirch, FR;
KUGLER, Dagmar, Raiffeisenstrasse 45, 88433 SCHEMMERHOFEN, DE;
KLINDER, Klaus, Storchenweg 3, 88422 OGGELSHAUSEN, DE;
DORNER-CIOSSEK, Cornelia, Huebscher 6/1, 88213 Ravensburg, DE;
KOSTKA, Marcus, Kirschenweg 13/2, 88400 BIBERACH, DE
(74) Hammann, Heinz, et al, Boehringer Ingelheim Pharma GmbH & Co. KG, Binger Strasse 173, 55216 Ingelheim am Rhein, DE

**(51) (8)** **EP 1799224** *
***A 61K 31/55***
***A 61P 25/00***
***A 61P 25/22***
***A 61P 25/24***
(23) 14.01.2011.
(30) US 23.09.2004. 612600 P
(86) PCT/US2005034199 23.09.2005.
(96) EP 05802627.9 23.09.2005. En
(87) WO2006034465 30.03.2006. 200613
(97) EP 1799224 27.06.2007. 200726 En
(41) 13.07.2011. 201128
**(54) MEMANTINE FOR THE TREATMENT OF CHILDHOOD BEHAVIORAL DISORDERS**
(71) Merz Pharma GmbH & Co. KGaA, Eckenheimer Landstrasse 100, 60318 Frankfurt, DE
(72) JONAS, Jeffrey, 1, Independence Court N507, Hoboken, NJ 07030, US;
BANERJEE, Pradeep, K., 105 Nostrand Road, Hillsborough, NJ 08844, US;
GUPTA, Sandeep, 6 Birch Drive, Plainsboro, NJ 08536, US;
MANN, Allison, 2000 Linwood Ave 7T, Fort Lee, NJ 07024, US;
MOEBIUS, Hans-Joerg, Krahbuhlweg 15, CH 8044 Zurich, CH
(74) Goddard, Christopher Robert, et al, Dehns, St Bride's House, 10 Salisbury Square, London, EC4Y 8JD, GB

**(51) (8)** **EP 2107909** *
***A 61K 31/66***
***C 12P 7/02***
(23) 07.12.2010.
(30) US 18.06.2007. 936290 P
US 06.11.2007. 985891 P
US 28.12.2006. 877944 P
(86) PCT/US2007026409 28.12.2007.
(96) EP 07868086.5 28.12.2007. En
(87) WO2008082602 10.07.2008. 200828
(97) EP 2107909 14.10.2009. 200942 En
(41) 29.06.2011. 201126
**(54) COMPOUNDS AND PHARMACEUTICAL COMPOSITIONS FOR THE TREATMENT OF LIVER DISORDERS**
(71) IDENIX Pharmaceuticals, Inc., 60 Hampshire Street, Cambridge, MA 02139, US;
Centre National de la Recherche Scientifique, 3, rue Michel-Ange, 75794 Paris Cedex 16, FR;
L'Université Montpellier II, 2, Place Eugne Bataillon, 34095 Montpellier Cedex 5, FR
(72) SOMMADOSSI, Jean-pierre, 103 Irving Street, Cambridge, MA 02138, US;
GOSSELIN, Gilles, 487 Rue Celleneuve Saint Hilaire, F-34000 Montpellier, FR;
PIERRA, Claire, 6 Rue Ernestine Montreuil, Lotissement Pioch Ourbatieu, 34570 Montarnaud, FR;
PERIGAUD, Christian, 124 Impasse Paul Eluard, F-34790 Grabels, FR;
PEYROTTES, Suzanne, 124 Impasse Paul Eluard, F-34790 Grabels, FR
(74) Ritter, Thomas Kurt, et al, Jones Day, Prinzregentenstraße 11, 80538 München, DE

**(51) (8)** **EP 1779856**
***A 61K 33/04***
***A 61K 36/06***
***A 61K 36/064***
***A 61P 25/28***
(23) 07.12.2010.
(30) US 14.10.2005. 726922 P
US 14.10.2005. 727015 P
US 14.10.2005. 727018 P
US 14.10.2005. 726951 P
(96) EP 06007441.6 07.11.2005. En
(97) EP 1779856 02.05.2007. 200718 En
(41) 25.05.2011. 201121
**(54) Use of selenium compounds, especially selenium yeasts in the treatment of Alzheimer, neurodegenerative diseases and diabetes**
(71) Alltech, Inc., 3031 Catnip Hill Pike, Nicholasville, KY 40356, US
(72) Lyons Pearse, Thomas, 67 Avenue of Champions, Nicholasville, KY 40356, US;
Power, Ronan, 752 Andover Village Drive, Lexington, KY 40509, US
(74) Glawe, Delfs, Moll, Patent- und Rechtsanwälte, Rothenbaumchaussee 58, 20148 Hamburg, DE

**(51) (7)** **EP 1694345** *
A 61K 35/48
A 61K 48/00
A 61P 1/16
(23) 06.02.2011.
(30) US 04.12.2003. 527249 P
(86) PCT/US2004040932 06.12.2004.
(96) EP 04813272.4 06.12.2004. En
(87) WO2005056026 23.06.2005. 200525
(97) EP 1694345 30.08.2006. 200635 En
(41) 15.06.2011. 201124
**(54) COMPOSITIONS AND METHODS FOR THE TREATMENT OF LYSOSOMAL STORAGE DISORDERS**
(71) REGENTS OF THE UNIVERSITY OF MINNESOTA, 450 McNamara Alumni Center, 200 Oak Street SE, Minneapolis, Minnesota 55455, US
(72) BLAZAR, Bruce, 4350 Sussex Road, Golden Valley, Minnesota 55455, US;
TOLAR, Jakub, 3216 44th Avenue South, Minneapolis, Minnesota 55406, US;
VERFAILLIE, Catherine M., 300 Wall Street 706, St. Paul, Minnesota 55101, US
(74) Leifert & Steffan, Patentanwälte, Burgplatz 21-22, 40213 Düsseldorf, DE

**(51) (8)** **EP 1896048** *
***A 61K 38/02***
(23) 02.05.2010.
(30) US 06.05.2005. 678860 P
(86) PCT/US2006014808 18.04.2006.
(96) EP 06750765.7 18.04.2006. En
(87) WO2006121588 16.11.2006. 200646
(97) EP 1896048 12.03.2008. 200811 En
(41) 01.06.2011. 201122
**(54) PITUITARY ADENYLATE CYCLASE ACTIVATING PEPTIDE (PACAP) RECEPTOR (VPAC2)**

**AGONISTS AND THEIR PHARMACOLOGICAL METHODS OF USE**
(71) Bayer Pharmaceuticals Corporation, 400 Morgan Lane, West Haven, CT 06516, US
(72) CLAIRMONT, Kevin, 80 Merwin Circle, Cheshire, Connecticut 06410, US;
LUMB, Kevin, 520 Granite Road, Guilford, Connecticut 06437, US;
WHELAN, James, 210 Summer Hill Road, Madison, Connecticut 06443, US
(74) Burkert, Frank, et al, Bayer Schering Pharma Aktiengesellschaft, Law and Patents, Patents and Licensing, Building Q 18, 51368 Leverkusen, DE

**(51) (7)** **EP 1701732 ***
A 61K 38/06
A 61P 43/00
(23) 24.12.2010.
(30) US 30.12.2003. 750005
(86) PCT/US2004043660 27.12.2004.
(96) EP 04821314.4 27.12.2004. En
(87) WO2005074903 18.08.2005. 200533
(97) EP 1701732 20.09.2006. 200638 En
(41) 29.06.2011. 201126
**(54) SULFHYDRYL PROTECTED GLUTATHIONE PRODRUG**
(71) Nagasawa, Herbert T., 22 Gingerwood, Irvine CA 92603, US
(72) NAGASAWA, Herbert, T., 22 Gingerwood, Irvine, CA 92603, US;
COHEN, Jonathan, F., 3581 Willow Beach Tr., Southwest, Prior Lake, MN 55372, US
(74) McNab, Donald C., et al, Marks & Clerk LLP, Aurora, 120 Bothwell Street, Glasgow, G2 7JS, GB

**(51) (8)** **EP 2001501 ***
***A 61K 38/08***
(23) 01.10.2010.
(30) US 10.03.2006. 780825 P
US 13.03.2006. 781367 P
US 09.10.2006. 828723 P
US 02.02.2007. 899035 P
(86) PCT/US2007005668 06.03.2007.
(96) EP 07867005.6 06.03.2007. En
(87) WO2008054465 08.05.2008. 200819
(97) EP 2001501 17.12.2008. 200851 En
(41) 08.06.2011. 201123
**(54) METHOD TO REDUCE THE RISK AND/OR SEVERITY OF ANTHRAX INFECTION**
(71) ImmuneRegen BioSciences, Inc., 4021 N. 75th Street, Suite 201, Scottsdale, AZ 85251, US
(72) SIEGEL, Hal, 7111 E. McDonald Drive, Paradise Valley, AZ 85253-5406, US;
KALNS, John, 13302 Langtry Street, San Antonio, TX 78248, US
(74) Weber, Martin, et al, Jones Day, Rechtsanwälte Attorneys-at-Law Patentanwälte, Prinzregentenstrasse 11, 80538 München, DE

**(51) (8)** **EP 2167113 ***
***A 61K 38/17***
***A 61K 38/08***
***A 61K 38/10***
***A 61K 39/395***
***A 61P 9/10***
***A 61P 25/28***
***A 61P 35/00***
(23) 04.01.2011.
(30) DK 12.06.2007. 200700852
(86) PCT/DK2008050139 12.06.2008.
(96) EP 08784448.6 12.06.2008. En
(87) WO2008151637 18.12.2008. 200851
(97) EP 2167113 31.03.2010. 201013 En
(41) 22.06.2011. 201125
**(54) NEUROPLASTIN DERIVED PEPTIDES**
(71) Copenhagen University, Techtrans Unit, Biegdamsvej 3, 2200 Kobenhavn N, DK;
Berezin, Vladimir, Norrebrogade 223, 1.th., 2200 Copenhagen N, DK;
Bock, Elisabeth, Tonysvej 20, 2920 Charlottenlund, DK;
Soroka, Vladislav, Olivenlunden 43, 2630 Taastrup, DK
(72) BEREZIN, Vladimir, Nørrebrogade 223, 1. th., DK-2200 Copenhagen N, DK;
BOCK, Elisabeth, Tonysvej 20, DK-2920 Charlottenlund, DK;
SOROKA, Vladislav, Olivenlunden 41, DK-2630 Taastrup, DK
(74) Høiberg A/S, St. Kongensgade 59 A, 1264 Copenhagen K, DK

**(51) (8)** **EP 2049151 ***
***A 61K 38/43***
***A 61K 38/46***
***A 61P 35/04***
***C 12N 9/00***
***C 12N 9/22***
(23) 14.12.2010.
(30) US 17.07.2006. 831378 P
(86) PCT/US2007016141 17.07.2007.
(96) EP 07796885.7 17.07.2007. En
(87) WO2008010991 24.01.2008. 200804
(97) EP 2049151 22.04.2009. 200917 En
(41) 01.06.2011. 201122
**(54) METHODS AND COMPOSITIONS FOR THE TREATMENT OF CANCER**
(71) Quintessence Biosciences, Inc., 505 South Rosa Road, Madison, WI 53719, US
(72) KINK, John, A., 110 Wolf Street, Madison, WI 53717, US;
STRONG, Laura, E., 1285 Woodsview Circle, Stoughton, WI 53589, US;
SHAHAN, Mark, N., 607 Piper Drive, Madison, WI 53711, US
(74) Glawe, Delfs, Moll, Patent- und Rechtsanwälte, Rothenbaumchaussee 58, 20148 Hamburg, DE

**(51) (8)** **EP 1789081 ***
***A 61K 39/00***
***C 07K 7/00***
(23) 04.01.2011.
(30) AT 13.09.2004. 15312004
(86) PCT/EP2005054445 08.09.2005.
(96) EP 05789506.2 08.09.2005. De

(87) WO2006029982 23.03.2006. 200612
(97) EP 1789081 30.05.2007. 200722 De
(41) 22.06.2011. 201125
**(54) TREATMENT OF ATHEROSCLEROSIS**
(71) AFFIRIS Forschungs- und Entwicklungs GmbH, Viehmarktgasse 2A, 1030 Wien, AT
(72) MATTNER, Frank, Sieveringerstrasse 190, A-1190 Wien, AT;
SCHMIDT, Walter, Steingasse 18/1/10, A-1030 Wien, AT
(74) Sonn & Partner Patentanwälte, Riemergasse 14, 1010 Wien, AT

**(51) (8)** **EP 1962893 ***
***A 61K 39/00***
***A 61K 39/15***
***A 61K 39/17***
***A 61K 39/145***
(23) 04.01.2011.
(30) US 02.12.2005. 741833 P
US 22.05.2006. 802864 P
(86) PCT/US2006045859 01.12.2006.
(96) EP 06838693.7 01.12.2006. En
(87) WO2007064802 07.06.2007. 200723
(97) EP 1962893 03.09.2008. 200836 En
(41) 22.06.2011. 201125
**(54) CHIMERIC VIRUSES PRESENTING NON-NATIVE SURFACE PROTEINS AND USES THEREOF**
(71) Mount Sinai School of Medicine, One Gustave Levy Place, New York, NY 10029-6574, US
(72) PALESE, Peter, 414 Highwood Avenue, Leonia, NJ 07605, US;
GARCIA-SASTRE, Adolfo, 16 East 96th Street, Apt. 3G, New York, NY 10128, US
(74) Weber, Martin, et al, Jones Day, Rechtsanwälte Attorneys-at-Law Patentanwälte, Prinzregentenstrasse 11, 80538 München, DE

**(51) (7)** **EP 1715892 ***
A 61K 39/395
A 61K 38/00
A 61P 17/02
A 61P 19/02
A 61P 35/00
A 61P 37/00
C 07D 207/00
C 07K 16/28
(23) 09.05.2011.
(30) US 03.02.2004. 541849 P
US 04.08.2004. 598958 P
US 08.11.2004. 626195 P
(86) PCT/US2005003521 02.02.2005.
(96) EP 05726389.9 02.02.2005. En
(87) WO2005074645 18.08.2005. 200533
(97) EP 1715892 02.11.2006. 200644 En
(41) 15.06.2011. 201124
**(54) METHODS AND COMPOSITIONS FOR MODULATING ANGIOGENESIS**
(71) ChemoCentryx, Inc., 850 Maude Avenue, Mountain View, California 94043, US
(72) BURNS, Jennifer, 500 Walnut Street, Royersford, PA 19468, US;
SUMMERS, Bretton, 1045 Mission Street, 418, San Francisco, CA 94103-5816, US;
WANG, Yu, 235 Isleford Lane, Redwood City, CA 94065, US;
HOWARD, Maureen, 12700 Viscaino Road, Los Altos, CA 94022, US;
SCHALL, Thomas, 563 Homer Avenue, Palo Alto, CA 94301, US;
MIAO, Zhenhua, 7070 Rainbow Drive, 2, San Jose, CA 95129, US
(74) Broughton, Jon Philip, et al, HLBBshaw, Merlin House, Falconry Court, Baker's Lane, Epping, Essex CM16 5DQ, GB

**(51) (8)** **EP 2001510 ***
***A 61K 39/395***
***C 07K 16/28***
(23) 08.12.2010.
(30) US 16.03.2006. 783535 P
US 07.12.2006. 873881 P
(86) PCT/US2007006443 14.03.2007.
(96) EP 07753094.7 14.03.2007. En
(87) WO2007109052 27.09.2007. 200739
(97) EP 2001510 17.12.2008. 200851 En
(41) 29.06.2011. 201126
**(54) METHODS OF TREATING LUPUS USING CD4 ANTIBODIES**
(71) Genentech, Inc., 1 DNA Way, South San Francisco CA 94080-4990, US
(72) IRVING, Bryan, 587 Arkansas Street, San Francisco, CA 94107, US
(74) Kiddle, Simon John, Mewburn Ellis LLP, 33 Gutter Lane, London, EC2V 8AS, GB

**(51) (8)** **EP 2040751 ***
***A 61K 39/395***
***A 61P 35/00***
(23) 16.12.2010.
(30) US 15.06.2006. 814357 P
(86) PCT/US2007014051 15.06.2007.
(96) EP 07796155.5 15.06.2007. En
(87) WO2007146414 21.12.2007. 200751
(97) EP 2040751 01.04.2009. 200914 En
(41) 08.06.2011. 201123
**(54) COMBINATION THERAPY EMPLOYING LYMPHOTOXIN BETA RECEPTOR BINDING MOLECULES IN COMBINATION WITH SECOND AGENTS**
(71) Biogen Idec MA Inc., 14 Cambridge Center, Cambridge, MA 02142, US
(72) SILVERIO, Erika Lorraine, 20 Magnolia Street, Framingham, MA 01701, US;
BOTTIGLIO, Cindy, 11 Mt. Vernon Street, Lawrence, MA 01843, US
(74) Adams, Harvey Vaughan John, et al, Mathys & Squire LLP, 120 Holborn, London, EC1N 2SQ, GB

**(51) (7)** **EP 1738766**
A 61K 45/00
A 61K 31/522
A 61P 3/00
A 61P 19/02
A 61P 19/04
A 61P 21/00
A 61P 29/00
A 61P 43/00
C 07D 473/06
C 07D 473/12
(23) 07.12.2010.
(30) JP 30.03.2004. 2004097422
(86) PCT/JP2005006033 30.03.2005.
(96) EP 05727903.6 30.03.2005. Ja
(87) WO2005094885 13.10.2005. 200541
(97) EP 1738766 03.01.2007. 200701 En
(41) 22.06.2011. 201125
**(54) PREVENTIVE AND/OR THERAPEUTIC AGENT FOR DISEASE ACCOMPANIED BY CHRONIC MUSCLE/SKELETON PAIN**
(71) Kyowa Hakko Kirin Co., Ltd., 1-6-1, Ohtemachi, Chiyoda-ku, Tokyo 100-8185, JP
(72) KASE, Hiroshi, 3-35-18, Maehara-cho, Koganei-shi, Tokyo 184-0013, JP;
TAKAHASHI, Isami,c/o Kyowa Hakko Kogyo Co., Ltd., 6-1, Ohtemachi 1-chome, Chiyoda-ku, Tokio 100-8185, JP;
KUNORI, Shunji, c/o Kyowa Hakko Kogyo Co., Ltd., 1188, Shimotogari, Nagaizumi-cho, Sunto-gun, Shizuoka 411-8731, JP;
KOBAYASHI, Minoru, Kyowa Hakko Kogyo Co., Ltd., 1188, Shimotogari, Nagaizumi-cho, Sunto-gun, Shizuoka 41-8731, JP;
SHIOZAKI, Shizuo, Kyowa Hakko Kogyo Co., Ltd., 1188, Shimotogari, Nagaizumi-cho, Sunto-gun, Shizuoka 411-8731, JP;
SHIRAKURA, Shiro, Kyowa Hakko Kogyo Co., Ltd., 1188 Shimotogari, Nagaizumi-cho, Sunto-gun, Shizuoka 411-8731, JP
(74) Vossius & Partner, Siebertstrasse 4, 81675 München, DE

**(51) (8)** **EP 1768699 ***
***A 61K 45/00***
***A 61K 31/713***
***A 61K 39/395***
***A 61P 35/00***
(23) 09.05.2011.
(30) US 20.07.2004. 589616 P
(86) PCT/US2005025602 19.07.2005.
(96) EP 05774637.2 19.07.2005. En
(87) WO2006014653 09.02.2006. 200606
(97) EP 1768699 04.04.2007. 200714 En
(41) 22.06.2011. 201125
**(54) INDUCTION OF APOPTOSIS IN TOLL-LIKE RECEPTOR EXPRESSING TUMOR CELLS**
(71) Schering Corporation, 2000 Galloping Hill Road, Kenilworth, NJ 07033-0530, US
(72) LEBECQUE, Serge, 514, chemin du Marand, F-69380 Civrieux d'Azergues, FR;
RENNO, Toufic, 348, rue de l'Eglise, F-69380 Civrieux d'Azergues, FR;
SALAUN, Bruno, Av. du Chateau 81, CH-1008 Prilly, CH;
COSTE-INVERNIZZI, Isabelle, 7, rue Combet, F-69380 Chazay d'Azergues, FR;
RISSOAN, Marie-Clotilde, 8, place St Jean, F-69005 Lyon, FR
(74) Hussain, Deeba, et al, Merck & Co., Inc., Patent Department, Hertford Road, Hoddesdon, Hertfordshire EN11 9BU, GB

**(51) (7)** **EP 1720577 ***
A 61K 45/06
A 61K 31/575
A 61K 31/4015
A 61P 11/00
A 61K 9/00
(23) 04.05.2011.
(30) EP 27.02.2004. 04004473
(86) PCT/EP2005050799 25.02.2005.
(96) EP 05708057.4 25.02.2005. En
(87) WO2005082413 09.09.2005. 200536
(97) EP 1720577 15.11.2006. 200646 En
(41) 15.06.2011. 201124
**(54) CICLESONIDE AND GLYCOPYRRONIUM COMBINATION**
(71) Nycomed GmbH, Byk-Gulden-Strasse 2, 78467 Konstanz, DE
(72) ROSCHER, René, Mainaustr. 96, 78464 Konstanz, DE;
KARL, Christoph, Kressgasse 3, A-3002 Purkersdorf, AT
(74) Kratzer, Bernd, et al, Nycomed GmbH, Postfach 10 03 10, 78403 Konstanz, DE

**(51) (7)** **EP 1747019 ***
A 61K 47/48
A 61P 35/00
A 61P 35/04
A 61P 33/00
A 61P 31/12
(23) 01.12.2010.
(30) IT 13.05.2004. RM20040241
(86) PCT/IT2005000261 04.05.2005.
(96) EP 05743015.9 04.05.2005. En
(87) WO2005110487 24.11.2005. 200547
(97) EP 1747019 31.01.2007. 200705 En
(41) 29.06.2011. 201126
**(54) CAMPTOTHECIN DERIVATIVES CONJUGATED IN POSITION 20 WITH INTEGRIN ANTAGONISTS**
(71) SIGMA-TAU, Industrie Farmaceutiche Riunite S.p.A., Viale Shakespeare 47, 00144 Roma, IT;
ISTITUTO NAZIONALE PER LO STUDIO, E LA CURA DEI TUMORI, Via Venezian, 1, I-20133 Milano, IT
(72) DAL POZZO, Alma, Via G. Colombo, 81, 20133 Milano, IT;
PENCO, Sergio, Via Milly Carla Mignone, 5, I-20153 Milano, IT;
MERLINI, Lucio, Via Crivelli, 14, I-20122 Milano, IT;
GIANNINI, Giuseppe, Via Pontina, Km. 30,400, 00040 Pomezia, IT;
TINTI, Maria Ornella, Via Pontina, km 30,400, 00040 Pomezia, IT;
PISANO, Claudio, Via Pontina, Km. 30,400, 00040 Pomezia, IT;
ZUNINO, Franco, Via Venezian, 1, 20133 Milano, IT;
ALLOATTI, Domenico, Via Pontina, Km 30,400, 00040 Pomezia, IT;

VESCI, Loredana, Via Pontina, Km. 30,400, 00040 Pomezia, IT;
DALLAVALLE, Sabrina, Via Monte Nero, 9, I-20059 Vimercate, IT;
NI MING, Hong, Via G. Colombo, 81, 20133 Milano, IT
(74) Spadaro, Marco, et al, Studio Associato LEONE & SPADARO, Viale Europa, 15, 00144 Roma, IT

**(51) (8)** **EP 1942944** *
***A 61K 47/48***
***A 61P 35/00***
***A 61K 38/15***
(23) 30.01.2011.
(30) US 31.10.2005. 731972 P
(86) PCT/US2006060276 26.10.2006.
(96) EP 06850076.8 26.10.2006. En
(87) WO2007100385 07.09.2007. 200736
(97) EP 1942944 16.07.2008. 200829 En
(41) 08.06.2011. 201123
**(54) MACROCYCLIC DEPSIPEPTIDE ANTIBODY-DRUG CONJUGATES AND METHODS**
(71) Genentech, Inc., 1 DNA Way, South San Francisco CA 94080-4990, US
(72) JACKSON, David Y., 1360 Claremont Drive, San Bruno, California 94066, US
(74) Walton, Seán Malcolm, et al, Mewburn Ellis LLP, 33 Gutter Lane, London, EC2V 8AS, GB

**(51) (8)** **EP 2133104**
***A 61L 9/12***
***A 47K 10/32***
***B 65H 75/18***
(23) 03.06.2011.
(30) IT 02.03.2006. MO20060075
(96) EP 07003868.2 26.02.2007. It
(97) EP 2133104 16.12.2009. 200951 En
(41) 06.07.2011. 201127
**(54) Core for Rolls**
(71) Cartiera Lucchese S.p.A., Via Ciarpi, 77, 55016 Porcari LU, IT
(72) Pasquini, Sandro, Via San Nicolao, 47, 55100 Lucca, IT; The other inventor has agreed to waive his entitlement to designation.
(74) Brogi, Graziano, APTA S.r.l., Piazza dei Martiri 1, 40121 Bologna, IT

**(51) (8)** **EP 1904145** *
***A 61M 31/00***
***A 61M 5/30***
***A 61M 5/00***
***A 61M 5/20***
(23) 01.09.2010.
(30) US 06.07.2005. 175543
WO 06.12.2005. PCT/US2005/044159
(86) PCT/US2006007097 28.02.2006.
(96) EP 06736417.4 28.02.2006. En
(87) WO2007008257 18.01.2007. 200703
(97) EP 1904145 02.04.2008. 200814 En
(41) 15.06.2011. 201124
**(54) METHOD AND APPARATUS FOR DELIVERING EPINEPHRINE**
(71) Washington Biotech Corp., PO Box 31090, Spokane, WA 99223-3018, US
(72) WYRICK, Ronald, S., 4503 E. Red Roan DR., Spokane, WA 99207, US
(74) Wichmann, Hendrik, Isenbruck Bösl Hörschler LLP, Patentanwälte, Prinzregentenstrasse 68, 81675 München, DE

**(51) (8)** **EP 2040789** *
***A 61M 31/00***
(23) 01.12.2010.
(30) US 17.07.2006. 807525 P
US 29.08.2006. 823838 P
(86) PCT/EP2007006060 09.07.2007.
(96) EP 07765138.8 09.07.2007. En
(87) WO2008009364 24.01.2008. 200804
(97) EP 2040789 01.04.2009. 200914 En
(41) 25.05.2011. 201121
**(54) MEDICATION APPLICATOR DEVICE**
(71) EURO-CELTIQUE S.A., 2, avenue Charles de Gaulle, 1653 Luxembourg, LU
(72) LADD, Lori, A., 1295 Hidden Oak Road, Chesterfield, MO 63017, US;
MILLER, Lisa, C., 3 Old Field Road, Rowayton, CT 06853, US
(74) Maiwald, Walter, Maiwald Patentanwalts GmbH, Elisenhof, Elisenstrasse 3, 80335 München, DE

**(51) (8)** **EP 2044974**
***A 61N 5/06***
(23) 31.12.2010.
(96) EP 07460024.8 03.10.2007. Pl
(97) EP 2044974 08.04.2009. 200915 En
(41) 22.06.2011. 201125
**(54) Light-emitting diode (LED) light therapy device**
(71) Aracaria B.V., Spiegelgracht 15, 1017 JP Amsterdam, NL
(72) Vibor Mulic, ul. Jazgarzewska 4, 00-730 Warszawa, PL
(74) Viering, Jentschura & Partner, Postfach 22 14 43, 80504 München, DE

**(51) (8)** **EP 2173438** *
***A 61P 29/00***
***A 61P 35/00***
***G 01N 33/569***
***G 01N 33/574***
***A 61K 39/00***
(23) 14.12.2010.
(30) US 13.07.2007. 959726 P
US 16.11.2007. 3499
(86) PCT/US2008069807 11.07.2008.
(96) EP 08781704.5 11.07.2008. En
(87) WO2009012156 22.01.2009. 200904
(97) EP 2173438 14.04.2010. 201015 En
(41) 01.06.2011. 201122
**(54) TREATMENTS AND DIAGNOSTICS FOR CANCER, INFLAMMATORY DISORDERS AND AUTOIMMUNE DISORDERS**
(71) Genentech, Inc., 1 DNA Way, South San Francisco, CA 94080, US
(72) GODOWSKI, Paul J., 25 Orange Court, Hillsborough, CA 94010, US;
LEHMANN, Joachim, Gundeldingerstrasse 87, 4053 Basel, CH;
KOLUMAM, Ganesh A., 1788 Roberta Drive, San Mateo, California 94403, US

(74) Woolley, Lindsey Claire, et al, Mewburn Ellis LLP, 33 Gutter Lane, London, EC2V 8AS, GB

**(51) (8)** **EP 1982760**
***B 01J 20/26***
***C 08L 33/06***
***C 09K 3/00***
(23) 03.11.2010.
(30) FR 13.04.2007. 0702704
(96) EP 08007232.5 11.04.2008. Fr
(97) EP 1982760 22.10.2008. 200843 Fr
(41) 25.05.2011. 201121
**(54) Pulverulent composition for absorbing aqueous liquids**
(71) Revert, Olivier, 5 grande rue, 78270 Mericourt, FR
(72) Revert, Olivier, 5 grande rue, 78270 Mericourt, FR
(74) Thibon-Littaye, Annick, Cabinet A. THIBON-LITTAYE, 11, rue de l'Etang, 78160 Marly-le-Roi, FR

**(51) (8)** **EP 2113308**
***B 05B 11/00***
***B 29C 49/00***
***B 65D 1/02***
(23) 14.12.2010.
(96) EP 08155530.2 30.04.2008. En
(97) EP 2113308 04.11.2009. 200945 En
(41) 01.06.2011. 201122
**(54) Container having wall portions with different pressure resistance**
(71) Epopack Co., Ltd., No. 20-5, Tien Hsin Tzu, Hsing Hua Tsun, San Tze Shiang, Taipei Hsien 25243, TW
(72) Pan, Patrick, NO.20-5, Tien Hsin Tzu, Hsing Hua Tsun, San Tze, Shiang, 25243 Taipei Hsien, TW
(74) Chaillot, Genevive, Cabinet Chaillot, 16-20 Avenue de l'Agent Sarre, B.P. 74, 92703 Colombes Cedex, FR

**(51) (7)** **EP 1750858** *
B 05D 3/10
B 05D 5/00
B 05D 7/14
(23) 01.12.2010.
(30) US 18.05.2004. 572019 P
(86) PCT/US2005017293 17.05.2005.
(96) EP 05749563.2 17.05.2005. En
(87) WO2005115638 08.12.2005. 200549
(97) EP 1750858 14.02.2007. 200707 En
(41) 15.06.2011. 201124
**(54) PROCESS FOR COATING AND CLEANING METAL SURFACES**
(71) Ashland Licensing and Intellectual Property LLC, 5200 Blazer Parkway, Dublin, OH 43017, US
(72) MIHELIC, Joseph, 92 Cobbler Square, Sparta, NJ 07871, US
(74) Bülle, Jan, et al, Patentanwälte Kutzenberger & Wolff, Theodor-Heuss-Ring 23, 50668 Köln, DE

**(51) (8)** **EP 2191929**
***B 23K 37/04***
***B 23K 7/00***
(23) 03.12.2010.
(30) DE 29.10.2008. 202008014350 U
(96) EP 09174272.6 28.10.2009. De
(97) EP 2191929 02.06.2010. 201022 De
(41) 08.06.2011. 201123
**(54) Cutting table**
(71) Kemper, Gerd, Venn Diek 5, 48691 Vreden, DE
(72) Kemper, Gerd, Venn Diek 5, 48691 Vreden, DE
(74) Habbel, Ludwig, Habbel & Habbel, Patentanwälte, Am Kanonengraben 11, 48151 Münster, DE

**(51) (8)** **EP 2199042**
***B 26D 3/16***
***B 26D 7/06***
***B 65D 39/00***
***B 26D 3/02***
***B 23D 21/00***
(23) 24.12.2010.
(96) EP 08172201.9 18.12.2008. En
(97) EP 2199042 23.06.2010. 201025 En
(41) 06.07.2011. 201127
**(54) Chamfering equipment for cylindrical stoppers**
(71) Crosset, Léon, Z.I. Les Plénesses, 76, 4890 Thimister, BE
(72) Crosset, Léon, Z.I. Les Plénesses, 76, 4890 Thimister, BE
(74) Vandeberg, Marie-Paule L.G., et al, Office Kirkpatrick, 32, avenue Wolfers, 1310 La Hulpe, BE

**(51) (8)** **EP 1827782** *
***B 27K 3/34***
***B 27K 3/50***
***B 27K 3/52***
(23) 03.12.2010.
(30) EP 22.10.2004. 04105244
(86) PCT/EP2005055431 20.10.2005.
(96) EP 05797111.1 20.10.2005. En
(87) WO2006045751 04.05.2006. 200618
(97) EP 1827782 05.09.2007. 200736 En
(41) 25.05.2011. 201121
**(54) USE OF ANILINOPYRIMIDINES IN WOOD PROTECTION**
(71) Janssen Pharmaceutica NV, Turnhoutseweg 30, 2340 Beerse, BE
(72) BYLEMANS, Dany L.J., Janssen Pharmaceutica N.V., Turnhoutseweg 30, 2340 Beerse, BE;
VALCKE, Alex, R.A., Janssen Pharmaceutica N.V., Turnhoutseweg 30, 2340 Beerse, BE
(74) Verberckmoes, Filip Gerard, et al, Janssen Pharmaceutica N.V., J&J Patent Law Department, Turnhoutseweg 30, 2340 Beerse, BE

**(51) (8)** **EP 2089208** *
***B 29C 45/17***
***B 29C 45/18***
***B 29C 45/64***
***B 29C 45/72***
(23) 19.04.2011.
(30) US 30.10.2006. 554277
(86) PCT/CA2007001718 26.09.2007.
(96) EP 07815907.6 26.09.2007. En
(87) WO2008052305 08.05.2008. 200819
(97) EP 2089208 19.08.2009. 200934 En
(41) 25.05.2011. 201121
**(54) A CONTINUOUS MOLDING MACHINE**
(71) Husky Injection Molding Systems S.A., Zone Industrielle Riedgen, B.P. 93, 3401 Dudelange, LU
(72) DI SIMONE, John, 97 Wycliffe Avenue, Woodbridge, Ontario L4L 3N4, CA

**(51) (8)** **EP 2143542**
***B 29C 49/46***
***B 65B 3/02***
***B 29C 49/06***
***B 29C 49/12***
***B 29C 49/78***
(23) 14.12.2010.
(96) EP 08159852.6 07.07.2008. Fr
(97) EP 2143542 13.01.2010. 201002 Fr
(41) 01.06.2011. 201122
**(54) Method and apparatus for packaging a liquid food product**
(71) Nestec S.A., Avenue Nestlé 55, 1800 Vevey, CH
(72) Chauvin, Guillaume, 390, rue Croix de Mission, 88410 Monthureux sur Saone, FR;
Chimetto, Fabio, Via Dante 57, 35016 Piazzola sul Brenta (PD), IT;
Hartwig, Klaus, 11 rue du Grand Verger, 54000 Nancy, FR

**(51) (8)** **EP 2143543**
***B 29C 49/46***
***B 65B 3/02***
***B 29C 49/06***
***B 29C 49/12***
***B 29C 49/78***
(23) 14.12.2010.
(96) EP 08159853.4 07.07.2008. Fr
(97) EP 2143543 13.01.2010. 201002 Fr
(41) 01.06.2011. 201122
**(54) Device and method for packaging a liquid food product**
(71) Nestec S.A., Avenue Nestlé 55, 1800 Vevey, CH
(72) Chauvin, Guillaume, 390, rue Croix de Mission, 88410 Monthureux sur Saone, FR;
Chimetto, Fabio, Via Dante 57, 35016 Piazzola sul Brenta (PD), IT;
Hartwig, Klaus, 11 rue du Grand Verger, 54000 Nancy, FR

**(51) (8)** **EP 2143544**
***B 29C 49/46***
***B 29C 49/12***
***B 65B 3/02***
***B 29C 49/78***
***B 29C 49/06***
(23) 14.12.2010.
(96) EP 08159855.9 07.07.2008. Fr
(97) EP 2143544 13.01.2010. 201002 Fr
(41) 01.06.2011. 201122
**(54) Method and apparatus for packaging a liquid food product**
(71) Nestec S.A., Avenue Nestlé 55, 1800 Vevey, CH
(72) Chauvin, Guillaume, 390, rue Croix de Mission, 88410 Monthureux sur Saone, FR;
Chimetto, Fabio, Via Dante 57, 35016 Piazzola sul Brenta, IT;
Hartwig, Klaus, 11 rue du Grand Verger, 54000 Nancy, FR

**(51) (8)** **EP 2143545**
***B 29C 49/46***
***B 65B 3/02***
***B 65B 55/08***
***B 65B 55/10***
***B 29C 49/06***
***B 29C 49/12***
(23) 14.12.2010.
(96) EP 08159856.7 07.07.2008. Fr
(97) EP 2143545 13.01.2010. 201002 Fr
(41) 01.06.2011. 201122
**(54) Method and apparatus for packaging a liquid food product**
(71) Nestec S.A., Avenue Nestlé 55, 1800 Vevey, CH
(72) Chauvin, Guillaume, 390, rue Croix de Mission, 88410, MONTHUREUX SUR SAONE, FR;
Chimetto, Fabio, Via Dante 57, 35016, PIAZZOLA SUL BRENTA (PD), IT;
Di Lucchio, Angelo, 10, rue du Marot, 88390, DOMEVRE SUR AVIERE, FR;
Hartwig, Klaus, 11 rue du Grand Verger, 54000, NANCY, FR

**(51) (8)** **EP 1896258 ***
***B 32B 33/00***
***B 32B 27/12***
(23) 04.01.2011.
(30) ZA 27.06.2005. 200505172
(86) PCT/IB2006001743 26.06.2006.
(96) EP 06779773.8 26.06.2006. En
(87) WO2007000646 04.01.2007. 200701
(97) EP 1896258 12.03.2008. 200811 En
(41) 22.06.2011. 201125
**(54) MATERIAL AND JOINT FOR A SHELTER**
(71) Van Halderen, Bruce Simon, 123 Second Street, Parkmore, Sandton 2196, ZA
(72) Van Halderen, Bruce Simon, 123 Second Street, Parkmore, Sandton 2196, ZA
(74) Lawson, Alison Christina, Forrester & Boehmert, Pettenkoferstrasse 20-22, 80336 München, DE

**(51) (7)** **EP 1723547 ***
B 61L 27/00
B 61L 25/02
(23) 10.12.2010.
(30) US 27.02.2004. 789593
(86) PCT/US2005005738 24.02.2005.
(96) EP 05713980.0 24.02.2005. En
(87) WO2005086653 22.09.2005. 200538
(97) EP 1723547 22.11.2006. 200647 En
(41) 08.06.2011. 201123
**(54) GEOGRAPHIC INFORMATION SYSTEM AND METHOD FOR MONITORING DYNAMIC TRAIN POSITIONS**
(71) Ansaldo STS USA, Inc., 1000 Technology Drive, Pittsburgh, PA 15219-3120, US
(72) CHRISTIE, W., Brian, 8456 Coventry Drive, Allison Park, PA 15101, US;
RUDAKEWIZ, James, 9029 Audubon Drive, Gibsonia, PA 15044, US
(74) Barton, Matthew Thomas, et al, Forrester & Boehmert, Pettenkoferstrasse 20-22, 80336 München, DE

**(51) (8)** **EP 1812281** *
***B 62K 15/00***
***F 16B 7/22***
(23) 25.02.2011.
(30) US 01.10.2004. 956669
(86) PCT/EP2005054926 29.09.2005.
(96) EP 05792062.1 29.09.2005. En
(87) WO2006037752 13.04.2006. 200615
(97) EP 1812281 01.08.2007. 200731 En
(41) 06.07.2011. 201127
**(54) RELEASABLE SECURING APPARATUS AND METHOD OF USING SAME**
(71) Studio Moderna SA, Via Pretorio 22, 6900 Lugano, CH
(72) MIHELIC, Miko, Hrusevo 26A, 1356 DOBROVA, SI
(74) Franzolin, Luigi, et al, STUDIO TORTA, Via Viotti 9, 10121 Torino, IT

**(51) (8)** **EP 1829790**
***B 65D 41/34***
(23) 21.12.2010.
(30) ES 16.12.2004. 200402990
ES 12.12.2005. 200503045
(86) PCT/ES2005000676 13.12.2005.
(96) EP 05826209.8 13.12.2005. Es
(87) WO2006064069 22.06.2006. 200625
(97) EP 1829790 05.09.2007. 200736 En
(41) 15.06.2011. 201124
**(54) NON-REFILLABLE CAP FOR BOTTLES CONTAINING ALCOHOL AND SIMILAR**
(71) Plastivit, S.A., Viladomat, 321, 2, 08029 Barcelona, ES
(72) GARCIA RIBA, Jordi, Avda. Fabregada, 40, E-08907 L'HOSPITALET DE LLOBREGAT(BARCEL, ES; MARTIN, LOPEZ, Eduardo, Avda. Pompeu Fabra s/n, Pol. Ind. Puigbac, E-08570 Torello, ES
(74) Curell Aguilà, Marcelino, et al, CURELL SUAOL S.L.P., Passeig de Gràcia 65 bis, 08008 Barcelona, ES

**(51) (8)** **EP 1828002** *
***B 65D 51/22***
(23) 04.05.2011.
(30) KR 09.12.2004. 20040103652
KR 02.02.2005. 20050009769
KR 15.03.2005. 20050021246
KR 08.04.2005. 20050029510
KR 19.05.2005. 20050041905
KR 24.05.2005. 20050043522
(86) PCT/KR2005004188 07.12.2005.
(96) EP 05821087.3 07.12.2005. En
(87) WO2006062357 15.06.2006. 200624
(97) EP 1828002 05.09.2007. 200736 En
(41) 08.06.2011. 201123
**(54) VESSEL CAP AND SYSTEM FOR MANUFACTURING THE SAME**
(71) Rho, Hee Kwon, 2-402 Solhyanngi town, 544-1 Ilsan-ri, Mohyun-myu, Yongi-si, Kyungki-do 449-855, KR
(72) Rho, Hee Kwon, 2-402 Solhyanngi town, 544-1 Ilsan-ri, Mohyun-myu, Yongi-si, Kyungki-do 449-855, KR
(74) ABG Patentes, S.L., Avenida de Burgos 16D, Edificio Euromor, 28036 Madrid, ES

**(51) (8)** **EP 1924518** *
***B 65H 49/18***
(23) 13.04.2011.
(30) US 14.09.2005. 717104 P
US 28.04.2006. 380891
(86) PCT/US2006034542 06.09.2006.
(96) EP 06802966.9 06.09.2006. En
(87) WO2007032959 22.03.2007. 200712
(97) EP 1924518 28.05.2008. 200822 En
(41) 22.06.2011. 201125
**(54) THREAD SPOOL AND CAP**
(71) HAMILTON SEWING SUPPLY, INC., 1638 North 200 West, Suite H, Salt Lake City UT 84332, US
(72) LYMAN, James, 2539 North 400 East, North Logan, UT, US
(74) Browne, Robin Forsythe, et al, Hepworth Browne, Pearl Chambers, 22 East Parade, Leeds, LS1 5BY, GB

**(51) (8)** **WO 2010134106**
***B 66B 11/04***
(23) 12.05.2011.
(86) PCT/IT2010000085 26.02.2010.
(96) WO 10711763.2 26.02.2010. It
(87) WO2010134106 25.11.2010. 201047
(97) WO 2010134106 25.11.2010. 201047 En
(41) 15.06.2011. 201124
**(54) DEVICE FOR SAVING ENERGY DURING VERTICAL AND HORIZONTAL MOTIONS WHEREIN THE RESISTING TORQUE CAN BE SPLIT INTO TWO TORQUES OPPOSING EACH OTHER**
(71) Jezek, Giorgio, Via Ponte Alto 45 A, 38050 Cognola di Trento, IT
(72) Jezek, Giorgio, Via Ponte Alto 45, 38050 Cognola di Trento, IT
(74) Feltrinelli, Secondo Andrea, et al, APTA S.r.l., Patent Department, Via Ca' di Cozzi, 41, 37124 Verona, IT

**(51) (8)** **EP 2162379** *
***B 66B 21/12***
***B 61K 1/00***
(23) 01.12.2010.
(30) AT 22.05.2007. 7952007
(86) PCT/AT2008000160 08.05.2008.
(96) EP 08733263.1 08.05.2008. De
(87) WO2008141346 27.11.2008. 200848
(97) EP 2162379 17.03.2010. 201011 De
(41) 25.05.2011. 201121
**(54) TRANSPORT SYSTEM**
(71) Lechner, Alexander, Dietrichsteinerstrasse 27, 9583 Faak am See, AT
(72) Lechner, Alexander, Dietrichsteinerstrasse 27, 9583 Faak am See, AT
(74) Beer, Manfred, et al, BEER & PARTNER PATENTANWÄLTE KG, Lindengasse 8, 1070 Wien, AT

**(51) (8)** **EP 1907311** *
***B 66F 9/06***
(23) 03.12.2010.
(30) US 15.07.2005. 699654 P
(86) PCT/US2006027680 14.07.2006.
(96) EP 06787571.6 14.07.2006. En
(87) WO2007011871 25.01.2007. 200704
(97) EP 1907311 09.04.2008. 200815 En
(41) 25.05.2011. 201121
**(54) SHUTTLES FOR TRANSPORTING GOODS**

(71) Knapp Logistics & Automation Inc., 2124 Barrett Park Drive Suite 100, Kennesaw, GA 30144, US
(72) HENKEL, Claus, 3 Hastings Drive, Cartersville, Georgia 30120, US
(74) Hammler, Martin Franz, et al, Phillips & Leigh, 5 Pemberton Row, London EC4A 3BA, GB

**(51) (8)** **EP 1945568 ***
***C 01F 7/02***
***C 08K 3/22***
***C 09K 21/14***
(23) 16.12.2010.
(30) US 18.10.2005. 728199 P
US 26.06.2006. 816455 P
(86) PCT/US2006040241 12.10.2006.
(96) EP 06816939.0 12.10.2006. En
(87) WO2007047528 26.04.2007. 200717
(97) EP 1945568 23.07.2008. 200830 En
(41) 22.06.2011. 201125
**(54) THERMALLY STABLE ALUMINUM HYDROXIDE PARTICLES AND THEIR USE AS FILLERS IN EPOXY LAMINATE RESINS**
(71) Albemarle Corporation, 451 Florida Street, Baton Rouge, LA 70801-1765, US
(72) HERBIET, Rene, Stendrich 150, B-4700 Eupen, BE;
HEIM, Ingo, Kolner Str 110, 50127 Bergheim, DE;
PUETZ, Norbert, W., Memelerstrasse 1, 50129 Niederaussem, DE
(74) UEXKÜLL & STOLBERG, Patentanwälte, Beselerstrasse 4, 22607 Hamburg, DE

**(51) (8)** **EP 1893533 ***
***C 02F 1/00***
(23) 09.05.2011.
(30) US 17.05.2005. 681465 P
(86) PCT/CA2006000814 17.05.2006.
(96) EP 06741526.5 17.05.2006. En
(87) WO2006122418 23.11.2006. 200647
(97) EP 1893533 05.03.2008. 200810 En
(41) 15.06.2011. 201124
**(54) APPARATUS AND METHOD FOR THE NON-CHEMICAL STABILIZATION OF BIO-SOLIDS**
(71) WM International Limited, P.O. Box N-4369, Suite D, SG Hambros Building, Nassau, BS
(72) HANEY, Harold, E., 21 Boulevard Bourbonne, Lorraine, Québec J6Z 4G7, CA;
FREEMAN, Robert, 339 Jean-Baptiste Campeau, Saint-Eustache, Québec J7R 5E6, CA;
MORALES, Rodrigo, Lobo, Angela Peralta 180 Sur, Col. Ex-Seminario, Monterrey N.L., 64049, MX;
GAGNON, Daniel, 131 Chemin De La Rivire, St-Mathieu-du-Parc, Québec G0X 1N0, CA
(74) Ahner, Francis, et al, Cabinet Régimbeau, 20, rue de Chazelles, 75847 Paris Cedex 17, FR

**(51) (8)** **EP 2144855 ***
***C 02F 11/16***
***C 02F 3/32***
(23) 11.12.2010.
(30) IT 12.01.2007. PI20070003
(86) PCT/IB2008000069 14.01.2008.
(96) EP 08702232.3 14.01.2008. En
(87) WO2008084396 17.07.2008. 200829
(97) EP 2144855 20.01.2010. 201003 En
(41) 01.06.2011. 201122
**(54) PROCESS FOR BIOSTABILIZATION AND HUMIFICATION OF BIOLOGICAL SLUDGE IN PLANTED FILTERING BEDS**
(71) CNR Consiglio Nazionale Delle Ricerche, Piazzale Aldo Moro, 7, 00185 Empoli (FI), IT;
Acque S.p.a., Via Garigliano 1, 50053 Empoli (FI), IT
(72) AIELLO, Massimo, Via delle Case Rosse, 15, I-57127-Livorno, IT;
PERUZZI, Paolo, Via Giulio Masini, 140, I-50053 Empoli, IT;
CECCANTI, Brunello, Via Arginone, 6, I-56121 Putignano (PI), IT;
MASCIANDARO, Grazia, Via Cisanello, 83a, I-56124 Pisa, IT;
STURCHIO, Rocco, Via Luguria, 9, I-56124 Pisa, IT;
ARBI, Marco, Via di confie col ponte, 2/a, I-51013 Chiesina Uzzanese (PT), IT;
PERUZZI, Eleonora, Via Giulio Masini, 140, I-50053 Empoli, IT
(74) Celestino, Marco, ABM Agenzia Brevetti & Marchi, Viale G. Pisano, 31, 56123 Pisa, IT

**(51) (8)** **EP 1915334 ***
***C 07C 55/02***
***C 07C 69/593***
***A 61K 31/194***
***A 61K 31/195***
(23) 21.12.2010.
(30) DK 07.07.2005. 200501004
(86) PCT/DK2006000402 07.07.2006.
(96) EP 06753339.8 07.07.2006. En
(87) WO2007006307 18.01.2007. 200703
(97) EP 1915334 30.04.2008. 200818 En
(41) 08.06.2011. 201123
**(54) NOVEL SALTS OF FUMARIC ACID MONOALKYLESTERS AND THEIR PHARMACEUTICAL USE**
(71) Aditech Pharma AG, c/o Domanda Verwaltungs GmbH, Baarerstrasse 43, 6300 Zug, CH
(72) NILSSON, Henrik, Cort Adelersgade 4, st. th, DK-1053 Copenhagen, DK;
ANDERSEN, Jens E.T., Kohavevej 28, DK-2950 Vedbæk, DK;
MÜLLER, Bernd, W., Schlotfeldtsberg 14a, D-24220 Flintbek, DE
(74) Inspicos A/S, Kogle Allé 2, P.O. Box 45, 2970 Hørsholm, DK

**(51) (8)** **EP 1877362 ***
***C 07C 69/76***
(23) 03.10.2010.
(30) US 20.04.2005. 673655 P
(86) PCT/US2006015163 20.04.2006.
(96) EP 06751028.9 20.04.2006. En
(87) WO2006113917 26.10.2006. 200643
(97) EP 1877362 16.01.2008. 200803 En
(41) 08.06.2011. 201123
**(54) CRYSTALLINE SOLID AND AMORPHOUS FORMS OF (-)- HALOFENATE**
(71) METABOLEX, INC., 3876 Bay Center Place, Hayward, CA 94545, US

(72) DAUGS, Edward, D., 2788 Tupelo, Midland, Michigan 48642, US;
HAGEN, Eric, J., 1123 Trillium Lane, Lafayette, Indiana 47905, US;
HANKO, Jason, A., 4301 Antiquity Court, West Lafayette, Indiana 47906, US;
LOUKS, David, H., 8466 Circlewood Drive North, Saginaw, Michigan 48609, US
(74) Campbell, Patrick John Henry, J.A. Kemp & Co., 14 South Square, Gray's Inn, London WC1R 5JJ, GB

**(51) (8)** **EP 1863759** *
***C 07C 315/02***
***C 07C 315/06***
***C 07D 317/46***
(23) 01.12.2010.
(30) IN 29.03.2005. MU03632005
(86) PCT/IN2005000152 10.05.2005.
(96) EP 05784693.3 10.05.2005. En
(87) WO2006103689 05.10.2006. 200640
(97) EP 1863759 12.12.2007. 200750 En
(41) 25.05.2011. 201121
**(54) PROCESS FOR PREPARATION OF BICALUTAMIDE**
(71) USV Limited, B. S. D. Marg, Station Road, Govandi, Mumbai 400 088, MAH, IN
(72) TARUR, Venkatasubramanian, Radhakrishnan, A-301 Vaishali Towers, B.R. Road, Mulund (West), Mumbai 400 080, Maharashtra, IN;
KADAM, Suresh, Mahadev, Room No 12 NL-4, Sec. 1, Building No. 19, Shantid. Coop. Housin Soc.,Nerul, Navi Mumbai 400 706, Maharashtra, IN;
JOSHI, Anil, Purushottam, 406, Sonal Co-oper. Housing Soc, Near Saraswati Eng. High School, Panchpakhadi, Mumbai 400 601, Maharashtra, IN;
GAVHANE, Sachin, Baban, At post Adhalgaon, Tal-Shrigonda, Ahmednagar 413 701, Maharashtra, IN
(74) Schön, Christoph, et al, Kroher-Strobel, Rechts- und Patentanwälte, Bavariaring 20, 80336 München, DE

**(51) (8)** **EP 1892238**
***C 07D 207/08***
***A 61K 31/495***
***A 61K 31/496***
***A 61K 31/5377***
***A 61K 31/538***
***A 61K 31/54***
***A 61P 1/04***
***A 61P 11/06***
***A 61P 19/02***
***A 61P 25/00***
***A 61P 29/00***
***A 61P 37/02***
***A 61P 37/08***
***A 61P 43/00***
***C 07D 207/27***
***C 07D 207/404***
***C 07D 211/46***
***C 07D 211/58***
(23) 11.05.2011.
(30) JP 14.06.2005. 2005174072
(86) PCT/JP2006311900 14.06.2006.
(96) EP 06766669.3 14.06.2006. Ja
(87) WO2006134955 21.12.2006. 200651
(97) EP 1892238 27.02.2008. 200809 En
(41) 22.06.2011. 201125
**(54) 1, 2-DI(CYCLIC GROUP)SUBSTITUTED BENZENE DERIVATIVE**
(71) Eisai R&D Management Co., Ltd., 6-10, Koishikawa 4-chome, Bunkyo-ku, Tokyo 112-8088, JP
(72) KAWAHARA, Tetsuya, EISAI Co., Ltd., Tsukuba Lab. 1-3, Tokodai 5-chome, Tsukuba-shi, Ibaraki 300-2635, JP;
KOTAKE, Makoto, EISAI Co., Ltd., Tsukuba Lab. 1-3, Tokodai 5-chome, Tsukuba-shi, Ibaraki 300-2635, JP;
YONEDA, Naoki, EISAI Co., Ltd., Tsukuba Lab. 1-3, Tokodai 5-chome, Tsukuba-shi, Ibaraki 300-2635, JP;
HIROTA, Shinsuke, EISAI Co., Ltd., Tsukuba Lab. 1-3, Tokodai 5-chome, Tsukuba-shi, Ibaraki 300-2635, JP;
OHKURO, Masayoshi, EISAI Co., Ltd., Tsukuba Lab. 1-3, Tokodai 5-chome, Tsukuba-shi, Ibaraki 300-2635, JP
(74) HOFFMANN EITLE, Patent- und Rechtsanwälte, Arabellastraße 4, 81925 München, DE

**(51) (8)** **EP 1841736** *
***C 07D 209/42***
***A 61K 31/404***
***A 61P 11/00***
***A 61P 29/00***
***C 07D 401/04***
***C 07D 401/06***
***C 07D 417/06***
***C 07D 403/14***
***C 07D 209/30***
***C 07D 403/04***
(23) 29.12.2010.
(30) US 19.01.2005. 644525 P
US 19.01.2005. 644520 P
(86) PCT/GB2005004982 22.12.2005.
(96) EP 05823723.1 22.12.2005. En
(87) WO2006077367 27.07.2006. 200630
(97) EP 1841736 10.10.2007. 200741 En
(41) 29.06.2011. 201126
**(54) INDOLES USEFUL IN THE TREATMENT OF INFLAMMATION**
(71) Biolipox AB, Berzelius väg 3, plan 5, 171 65 Solna, SE
(72) PELCMAN, Benjamin, Biolipox AB, Berzelius väg 3, plan 5, S-171 65 Solna, SE;
OLOFSSON, Kristofer, Biolipox AB, Berzelius väg 3, plan 5, S-171 65 Solna, SE;
KATKEVICS, Martins, Latvian Inst. of Organic Synth, 21 Aizkraukles Str., LV-1006 Riga, LV;
OZOLA, Vita, Latvian Institute of Organic Synth., 21 Aizkraukles Str., LV-1006 Riga, LV;
SUNA, Edgars, Latvian Institute of Organics Synth., 21 Aizkraukles Str., LV-1006 Riga, LV;
KALVINS, Ivars, Latvian Institute of Organic Synth, 21 Aizkraukles Str., LV-1006 Riga, LV;
TRAPENCIERIS, Peteris, Latvian Inst. of Org. Synth, 21 Aizkraukles Str., LV-1006 Riga, LV;
KATKEVICA, Dace, Latvian Inst. of Organic Synth., 21 Aizkraukles Str., LV-1006 Riga, LV;
SCHAAL, Wesley, Biolipox AB, Berzelius väg 3, plan 5, S-171 65 Solna, SE
(74) McNeeney, Stephen Phillip, et al, Potter Clarkson LLP, Park View House, 58 The Ropewalk, Nottingham, NG1 5DD, GB

**(51) (8)** **EP 1917241 ***
***C 07D 209/46***
***C 07C 233/65***
***A 61K 31/4035***
***A 61K 31/165***
(23) 03.01.2011.
(30) EP 29.06.2005. 05380140
(86) PCT/EP2006006255 28.06.2006.
(96) EP 06776093.4 28.06.2006. En
(87) WO2007000339 19.04.2007. 200716
(97) EP 1917241 07.05.2008. 200819 En
(41) 29.06.2011. 201126
**(54) BICYCLIC DERIVATIVES AS P38 KINASE INHIBITORS**
(71) Palau Pharma, S.A., Av. Cami Reial 51-57, Pol. Ind., Riera de Caldes, 08184 Palau-solità i Plegamans, ES
(72) ALMANSA ROSALES, Carmen, Teodora Lamadrid, 41, entlo 4a, E-08022 Barcelona, ES;
VIRGILI BERNADÓ, Marina, Plaça Lesseps, 11, E-08023 Barcelona, ES
(74) Zumstein, Angela, et al, Maiwald Patentanwalts GmbH, Elisenhof, Elisenstrasse 3, 80335 München, DE

**(51) (8)** **EP 2027089 ***
***C 07D 211/32***
***C 07C 225/18***
***G 01N 30/02***
***G 01N 30/90***
***G 01N 33/15***
***A 61K 31/445***
(23) 01.12.2010.
(30) GB 18.05.2006. 0609835
(86) PCT/GB2007001872 18.05.2007.
(96) EP 07732893.8 18.05.2007. En
(87) WO2007135408 29.11.2007. 200748
(97) EP 2027089 25.02.2009. 200909 En
(41) 25.05.2011. 201121
**(54) IMPURITIES OF DONEPEZIL**
(71) PLIVA HRVATSKA d.o.o., Ulica grada Vukovara 49, 10000 Zagreb, HR
(72) KRIZMANIC, Irena, c/o Generics IP Dept, Pliva Hrvatska D.O.O., Ulica Grada Vukovara 49, 10000 Zagreb, HR;
LERMAN, Lidija, c/o Generics IP Dept, Pliva Hrvatska D.O.O., Ulica Grada Vukovara 49, 10000 Zagreb, HR;
SAMARDZIC, Zrinka, Mastelic, c/o Generics IP Dept, Pliva Hrvatska D.O.O., Ulica Grada Vukovara 49, 10000 Zagreb, HR;
KACZOROWSKA, Katarzyna, c/o Generics IP Dept, Pliva Hrvatska D.O.O., Ulica Grada Vukovara 49, 10000 Zagreb, HR;
MANIKOWSKI, Andrzej, c/o Generics IP Dept, Pliva Hrvatska D.O.O., Ulica Grada Vukovara 49, 10000 Zagreb, HR;
ZIOBRO, Barbara, c/o Generics IP Dept, Pliva Hrvatska D.O.O., Ulica Grada Vukovara 49, 10000 Zagreb, HR;
GREBENAR, Ivica, c/o Generics IP Dept, Pliva Hrvatska D.O.O., Ulica Grada Vukovara 49, 10000 Zagreb, HR;
KORUZNJAK, Jasna, Dogan, c/o Generics IP Dept, Pliva Hrvatska D.O.O., Ulica Grada Vukovara 49, 10000 Zagreb, HR
(74) Gallagher, Kirk James, et al, D Young & Co LLP, 120 Holborn, London EC1N 2DY, GB

**(51) (8)** **EP 2099755 ***
***C 07D 213/74***
***C 07D 237/20***
***C 07D 239/42***
***C 07D 277/18***
***C 07D 401/10***
***C 07D 401/12***
***C 07D 405/06***
***C 07D 405/10***
(23) 06.01.2011.
(30) IN 20.11.2006. MU19172006
IN 29.12.2006. MU21752006
IN 17.07.2007. MU13752007
US 06.08.2007. 954108 P
(86) PCT/IB2007003551 19.11.2007.
(96) EP 07858887.8 19.11.2007. En
(87) WO2008062276 29.05.2008. 200822
(97) EP 2099755 16.09.2009. 200938 En
(41) 29.06.2011. 201126
**(54) ACETYLENE DERIVATIVES AS STEAROYL COA DESATURASE INHIBITORS**
(71) Glenmark Pharmaceuticals S.A., Chemin de la Combeta, 5, 2300 La Chaux-de-Fonds, CH
(72) THOMAS, Abraham, Flat No. 5, 11th Flr., Building No. A-6, Millenium Towers, Sector 9, Sanpada, Navi, Mumbai-400 705, IN;
LINGAM, V.S. Prasada Rao, Flat No. 101, Enkay Square CHS, Plot No. 21, Sector 6, Koparkharine, Navi, Mumbai 400709, IN;
PHATANGARE, Shantaram Kashinath, Flat No:B-7/13B, Akansha CHS, Ghrakul, Sector 15, Kharghar, Navi,Mumbai 410 210, IN;
KHAIRATKAR-JOSHI, Neelima, C-101, Dev Prayag CHS, Bhakti Mandir Road, Near Hari Niwas, Panchpakhadi, Thane 400 602, IN;
SHAH, Daisy Manish, Padmashree Building, 1st Floor, Flat no.4, Anant Patil Marg, Dadar (W), Mumbai 400 028, IN;
UKIRDE, Deepak Vitthal, Dingore, Junnar Taluka, Pune 412 409, IN;
MORE, Dattaguru Anandrao, Sarawade, Radhanagari Taluka, Kolhapur 416 228, IN
(74) Harrison Goddard Foote, Belgrave Hall, Belgrave Street, Leeds, LS2 8DD, GB

**(51) (8)** **EP 2119706**
***C 07D 213/75***
***A 61K 31/4412***
***A 61K 31/4427***
***A 61K 31/496***
***A 61K 31/506***
***A 61K 31/5377***
***A 61P 35/00***
***C 07D 401/12***
***C 07D 401/14***
***C 07D 403/12***
***C 12N 15/09***
***C 12Q 1/68***
***G 01N 33/15***
***G 01N 33/48***
***G 01N 33/50***
***G 01N 33/53***
***G 01N 33/574***
(23) 28.04.2011.
(30) JP 23.02.2007. 2007044424
(86) PCT/JP2008053066 22.02.2008.
(96) EP 08711837.8 22.02.2008. Ja
(87) WO2008102870 28.08.2008. 200835
(97) EP 2119706 18.11.2009. 200947 En
(41) 08.06.2011. 201123
**(54) PYRIDINE OR PYRIMIDINE DERIVATIVE HAVING EXCELLENT CELL GROWTH INHIBITION EFFECT AND EXCELLENT ANTI-TUMOR EFFECT ON CELL STRAIN HAVING AMPLIFICATION OF HGFR GENE**
(71) Eisai R&D Management Co., Ltd., 6-10, Koishikawa 4-chome, Bunkyo-ku, Tokyo 112-8088, JP
(72) OBAISHI, Hiroshi, c/o EISAI CO. LTD., Tsukuba Research Laboratories, 1-3 Tokodai 5-chome, Tsukuba-shi, Ibaraki 300-2635, JP;
NAKAGAWA, Takayuki, c/o EISAI CO. LTD., Tsukuba Research Laboratories, 1-3 Tokodai 5-chome, Tsukuba-shi, Ibaraki 300-2635, JP;
MATSUSHIMA, Tomohiro, c/o EISAI CO. LTD., Tsukuba Research Laboratories, 1-3 Tokodai 5-chome, Tsukuba-shi, Ibaraki 300-2635, JP;
FUNASAKA, Setsuo, c/o EISAI CO. LTD., Tsukuba Research Laboratories, 1-3 Tokodai 5-chome, Tsukuba-shi, Ibaraki 300-2635, JP;
SHIROTORI, Shuji, c/o EISAI CO. LTD., Tsukuba Research Laboratories, 1-3 Tokodai 5-chome, Tsukuba-shi, Ibaraki 300-2635, JP;
TAKAHASHI, Keiko, c/o EISAI CO. LTD., Tsukuba Research Laboratories, 1-3 Tokodai 5-chome, Tsukuba-shi, Ibaraki 300-2635, JP
(74) HOFFMANN EITLE, Patent- und Rechtsanwälte, Arabellastraße 4, 81925 München, DE

**(51) (8)** **EP 1973882 ***
***C 07D 221/16***
***C 07D 401/04***
***C 07D 401/14***
***A 61K 31/495***
***A 61P 35/00***
(23) 04.01.2011.
(30) US 19.01.2006. 760317 P
(86) PCT/US2007001123 17.01.2007.
(96) EP 07716678.3 17.01.2007. En
(87) WO2007084498 26.07.2007. 200730
(97) EP 1973882 01.10.2008. 200840 En
(41) 13.07.2011. 201128
**(54) PIPERAZINE DERIVATIVES AS FARNESYL PROTEIN TRANSFERASE INHIBITORS**
(71) Schering Corporation, 2000 Galloping Hill Road, Kenilworth, NJ 07033, US
(72) KELLY, Joseph, M., 112 Princeton Road, Parlin, New Jersey 08859, US;
AFONSO, Adriano, 10 Woodmere Road, West Caldwell, New Jersey 07006, US
(74) Horgan, James Michael Frederic, et al, Merck Sharp & Dohme Ltd., European Patent Department, Hertford Road, Hoddesdon, Hertfordshire EN11 9BU, GB

**(51) (8)** **EP 2176230 ***
***C 07D 231/56***
***A 61K 31/416***
***A 61P 21/00***
(23) 01.12.2010.
(30) GB 15.08.2007. 0715938
(86) PCT/EP2008006717 14.08.2008.
(96) EP 08785564.9 14.08.2008. En
(87) WO2009021747 19.02.2009. 200908
(97) EP 2176230 21.04.2010. 201016 En
(41) 25.05.2011. 201121
**(54) TREATMENT OF DUCHENNE MUSCULAR DYSTROPHY**
(71) BioMarin IGA Limited, Dominion House, 60 Montrose Avenue, Nassau, BS
(72) WYNNE, Graham Michael, 91 Milton Park, Abingdon, Oxon OX14 4RY, GB;
DE MOOR, Olivier, 91 Milton Park, Abingdon, Oxon OX14 4RY, GB;
LECCI, Cristina, c/o Summit Corporation PLC, 91 Milton Park, Abingdon, Oxon OX14 4RY, GB;
VAN WELL, Renate, 91 Milton Park, Abingdon, Oxon OX14 4RY, GB;
JOHNSON, Peter David, 91 Milton Park, Abingdon, Oxon OX14 4RY, GB;
STORER, Richard, 91 Milton Park, Abingdon, Oxon OX14 4RY, GB;
POIGNANT, Severine, 91 Milton Park, Abingdon, Oxon OX14 4RY, GB;
WREN, Stephen Paul, 91 Milton Park, Abingdon, Oxon OX14 4RY, GB
(74) Cooke, Richard Spencer, et al, Elkington and Fife LLP, Prospect House, 8 Pembroke Road, Sevenoaks, Kent TN13 1XR, GB

**(51) (8)** **EP 2019094**
***C 07D 249/08***
***A 61K 31/4196***
***A 61K 31/437***
***A 61K 31/4375***
***A 61K 31/454***
***A 61K 31/4545***
***A 61K 31/5377***
***A 61P 25/28***
***A 61P 43/00***
***C 07D 401/10***
***C 07D 401/14***
***C 07D 413/10***
***C 07D 413/14***
***C 07D 471/04***
(23) 25.05.2011.
(30) JP 19.05.2006. 2006140606
(86) PCT/JP2007060188 18.05.2007.
(96) EP 07743623.6 18.05.2007. Ja
(87) WO2007135970 29.11.2007. 200748
(97) EP 2019094 28.01.2009. 200905 En
(41) 06.07.2011. 201127
**(54) HETEROCYCLIC TYPE CINNAMIDE DERIVATIVE**
(71) Eisai R&D Management Co., Ltd., 6-10, Koishikawa 4-chome, Bunkyo-ku, Tokyo 112-8088, JP
(72) KIMURA, Teiji, c/o Tsukuba Research Laboratories, Eisai Co., Ltd., 1-3, Tokodai 5-chome, Tsukuba-shi, Ibaraki 300-2635, JP;
KAWANO, Koki, c/o Tsukuba Research Laboratories, Eisai Co., Ltd., 1-3, Tokodai 5-chome, Tsukuba-shi, Ibaraki 300-2635, JP;
DOI, Eriko, c/o Tsukuba Research Laboratories, Eisai Co., Ltd., 1-3, Tokodai 5-chome, Tsukuba-shi, Ibaraki 300-2635, JP;
KITAZAWA,Noritaka, c/o Tsukuba Research Laboratories, Eisai Co., Ltd., 1-3, Tokodai 5-chome, Tsukuba-shi, Ibaraki 300-2635, JP;
MIYAGAWA, Takehiko, c/o Tsukuba Research Laboratories, Eisai Co., Ltd., 1-3, Tokodai 5-chome, Tsukuba-shi, Ibaraki 300-2635, JP;
SATO, Nobuaki, c/o Tsukuba Research Laboratories, Eisai Co., Ltd., 1-3, Tokodai 5-chome, Tsukuba-shi, Ibaraki 300-2635, JP;
KANEKO, Toshihiko, c/o Tsukuba Research Laboratories, Eisai Co., Ltd., 1-3, Tokodai 5-chome, Tsukuba-shi, Ibaraki 300-2635, JP;
SHIN, Kogyoku, c/o Tsukuba Research Laboratories, Eisai Co., Ltd., 1-3, Tokodai 5-chome, Tsukuba-shi, Ibaraki 300-2635, JP;
ITO, Koichi, c/o Tsukuba Research Laboratories, Eisai Co., Ltd., 1-3, Tokodai 5-chome, Tsukuba-shi, Ibaraki 300-2635, JP;
TAKAISHI, Mamoru, c/o Tsukuba Research Laboratories, Eisai Co., Ltd., 1-3, Tokodai 5-chome, Tsukuba-shi, Ibaraki 300-2635, JP;
SASAKI, Takeo, c/o Tsukuba Research Laboratories, Eisai Co., Ltd., 1-3, Tokodai 5-chome, Tsukuba-shi, Ibaraki 300-2635, JP;
HAGIWARA, Hiroaki, c/o Tsukuba Research Laboratories, Eisai Co., Ltd., 1-3, Tokodai 5-chome, Tsukuba-shi, Ibaraki 300-2635, JP
(74) HOFFMANN EITLE, Patent- und Rechtsanwälte, Arabellastraße 4, 81925 München, DE

**(51) (7)** **EP 1723129 ***
C 07D 277/64
C 07D 417/12
A 61K 31/496
A 61P 9/00
(23) 13.01.2011.
(30) US 18.12.2003. 531253 P
(86) PCT/US2004042859 17.12.2004.
(96) EP 04814988.4 17.12.2004. En
(87) WO2005061470 07.07.2005. 200527
(97) EP 1723129 22.11.2006. 200647 En
(41) 29.06.2011. 201126
**(54) 1-AKAN-2-OL SUBSTITUTED PIPERAZINE AND PIPERIDINE COMPOUNDS**
(71) CV THERAPEUTICS, INC., 3172 Porter Drive, Palo Alto, CA 94304, US
(72) ELZEIN, Elfatih, 4644 Creekwood Drive, Fremont, CA 94555, US;
IBRAHIM, Prabha, 3380 Lubich Drive, Mountain View, CA 94040, US;
PALLE, Venkata, D-11, Oakwood Estate,Akash Neem Marg, DLF-Phase II, Gurgaou 122001, IN;
REHDER, Kenneth, 510 Crievewood Drive, Durham, NC 27705, US;
ZABLOCKI, Jeffrey A., 1910 Noel Drive, Los Altos, CA 94024, US
(74) Schnappauf, Georg, et al, Dr. Volker Vossius, Patent- und Rechtsanwaltskanzlei, Geibelstrasse 6, 81679 München, DE

**(51) (7)** **EP 1557412**
C 07D 285/24
A 61K 31/549
A 61P 25/28
(23) 21.12.2010.
(30) FR 26.01.2004. 0400689
(96) EP 05290160.0 25.01.2005. Fr
(97) EP 1557412 27.07.2005. 200530 Fr
(41) 15.06.2011. 201124
**(54) Fluorinated benzothiadiazine derivatives and their use as AMPA receptor modulators**
(71) Les Laboratoires Servier, 12, Place de La Défense, 92415 Courbevoie Cedex, FR
(72) Francotte Pierre, 82-5a, Avenue Blonden, 4000 Liege, BE;
Fraikin Pierre, 25, Cité du Husquet, 4820 Dison, BE;
De Tullio Pascal, 22, Voie Du Herdier, 4020 Jupille, BE;
Pirotte Bernard, 5, rue Tollet, 4680 Oupeye, BE;
Lestage Pierre, 9, allée de la Grande Terre, 78170 La Celle Saint Cloud, FR;
Danober Laurence, 82, rue Henri Richaume, 78360 Montesson, FR;
Caignard Daniel-Henri, 22, avenue de la République, 78360 Le PECQ, FR;
Renard Pierre, 3, avenue du Parc, 78150 Le Chesnay, FR

**(51) (7)** **EP 1694642 ***
C 07D 307/34
C 07H 19/04
C 07H 19/23
(23) 07.12.2010.

(30) US 19.12.2003. 530934 P
(86) PCT/US2004041555 10.12.2004.
(96) EP 04813816.8 10.12.2004. En
(87) WO2005065150 21.07.2005. 200529
(97) EP 1694642 30.08.2006. 200635 En
(41) 29.06.2011. 201126
**(54) MUTAGENIC HETEROCYCLES**
(71) Koronis Pharmaceuticals, Inc., 12277 134th Cr. NE, Suite 110, Redmond, WA 98052, US
(72) DAIFUKU, Richard, 9270 SE 36th Place, Mercer Island, Washington 98040, US;
GALL, Alexander, 20051 170th Ave NE, Woodinville, Washington 98072, US;
SERGUEEV, Dmitri, 8747 NE 144th Court, Bothell, Washington 98011, US
(74) Manitz, Finsterwald & Partner GbR, Martin-Greif-Strasse 1, 80336 München, DE

**(51) (8)** **EP 2041107** *
***C 07D 307/52***
***A 61K 31/341***
***A 61K 31/40***
***A 61P 29/00***
***A 61P 35/00***
(23) 21.12.2010.
(30) US 07.07.2006. 819541 P
(86) PCT/US2007015671 05.07.2007.
(96) EP 07810279.5 05.07.2007. En
(87) WO2008005570 10.01.2008. 200802
(97) EP 2041107 01.04.2009. 200914 En
(41) 08.06.2011. 201123
**(54) 3,4-DI-SUBSTITUTED CYCLOBUTENE-1,2-DIONES AS CXC-CHEMOKINE RECEPTOR LIGANDS**
(71) Schering Corporation, 2000 Galloping Hill Road, Kenilworth, NJ 07033-0530, US;
Pharmacopeia, LLC, 10275 Science Center Drive, San Diego, CA 92121, US
(72) CHAO, Jianhua, 93 Lakeview Court, Pompton Lakes, New Jersey 07442, US;
CZARNIECKI, Michael, F., 30 Gildersleeve Place, Watchung, New Jersey 07069, US;
HE, Zhenmin, 288 FuTe ZhongLu, WaiGaoQiao Free Trade Zone, Shanghai 200121, CN;
LAI, Gaifa, 14 Wexford Drive, Monmouth Junction, New Jersey 08852, US;
MERRITT, James, Robert, 14 Gloucester Lane, Ewing, New Jersey 08618, US
(74) UEXKÜLL & STOLBERG, Patentanwälte, Beselerstrasse 4, 22607 Hamburg, DE

**(51) (7)** **EP 1748997** *
C 07D 333/38
C 07D 413/12
C 07D 409/12
A 61K 31/551
A 61P 7/02
(23) 01.12.2010.
(30) EP 13.05.2004. 04011387
(86) PCT/EP2005004974 07.05.2005.
(96) EP 05745599.0 07.05.2005. De
(87) WO2005111013 24.11.2005. 200547
(97) EP 1748997 07.02.2007. 200706 De
(41) 01.06.2011. 201122
**(54) SUBSTITUTED THIOPHENE-2-CARBOXYLIC ACID AMIDES, THE PRODUCTION THEREOF AND THE USE THEREOF AS DRUGS**
(71) Boehringer Ingelheim International GmbH, Binger Strasse 173, 55216 Ingelheim, DE;
Boehringer Ingelheim Pharma GmbH & Co. KG, Binger Strasse 173, 55216 Ingelheim, DE
(72) PFAU, Roland, Pfluggasse 15, 88400 BIBERACH, DE;
PRIEPKE, Henning, Birkenharderstr. 11, 88447 WARTHAUSEN, DE;
GERLACH, Kai, Mondstrasse 18/1, 88400 BIBERACH, DE;
WIENEN, Wolfgang, Kirschenweg 27, 88400 BIBERACH, DE;
SCHULER-METZ, Annette, Holzgasse 7, 89081 ULM, DE;
NAR, Herbert, Hexenweg 19, 88416 OCHSENHAUSEN, DE;
HANDSCHUH, Sandra, Schustergasse 3, 88447 WARTHAUSEN, DE
(74) Hammann, Heinz, et al, Boehringer Ingelheim Pharma GmbH, CD-Patents, Binger Straße 173, 55216 Ingelheim am Rhein, DE

**(51) (8)** **EP 2202230**
***C 07D 333/54***
***C 07D 333/56***
***C 07C 62/26***
***C 07C 62/38***
***A 61K 31/381***
***A 61K 31/19***
***A 61P 31/00***
(23) 31.12.2010.
(96) EP 08382085.2 23.12.2008. En
(97) EP 2202230 30.06.2010. 201026 En
(41) 29.06.2011. 201126
**(54) Competitive inhibitors of type ii dehydroquinase enzyme**
(71) UNIVERSIDADE DE SANTIAGO DE COMPOSTELA, Edificio CACTUS, Campus Sur, 15782 Santiago de Compostela, ES
(72) Gonzalez Bello, Concepción, UNIVERSIDADE DE SANTIAGO DE COMPOSTELA, Edificio CACTUS, Campus Sur, E-15782, Santiago de Compostela, ES;
Viera Prazeres, Verónica Filipa, UNIVERSIDADE DE SANTIAGO DE COMPOSTELA, Edificio CACTUS, Campus Sur, E-15782, Santiago de Compostela, ES;
Paz Gomez, Sonia, UNIVERSIDADE DE SANTIAGO DE COMPOSTELA, Edificio CACTUS, Campus Sur, E-15782, Santiago de Compostela, ES;
Sanchez Sixto, Cristina, UNIVERSIDADE DE SANTIAGO DE COMPOSTELA, Edificio CACTUS, Campus Sur, E-15782, Santiago de Compostela, ES;
Tizon Valverde, Lorena, UNIVERSIDADE DE SANTIAGO DE COMPOSTELA, Edificio CACTUS, Campus Sur, E-15782, Santiago de Compostela, ES
(74) ABG Patentes, S.L., Avenida de Burgos 16D, Edificio Euromor, 28036 Madrid, ES

**(51) (7)** **EP 1751134 ***
C 07D 401/04
C 07D 495/04
A 61K 31/404
A 61K 31/4365
A 61K 31/454
A 61P 25/00
(23) 01.12.2010.
(30) HU 11.05.2004. 0400956
HU 05.05.2005. 0500462
(86) PCT/HU2005000047 10.05.2005.
(96) EP 05745441.5 10.05.2005. En
(87) WO2005108388 17.11.2005. 200546
(97) EP 1751134 14.02.2007. 200707 En
(41) 01.06.2011. 201122
**(54) PYRIDINE DERIVATIVES OF ALKYL OXINDOLES AS 5-HT7 RECEPTOR ACTIVE AGENTS**
(71) EGIS Gyógyszergyár Nyrt, Keresztúri út 30-38, 1106 Budapest, HU
(72) VOLK, Balázs, Atlasz u. 34, H-1165 Budapest, HU;
BARKÓCZY, József, Szirom u. 4-6, H-1016 Budapest, HU;
SIMIG, Gyula, Hollósy S. u. 25, H-1126 Budapest, HU;
MEZEI, Tibor, Borz u. 4., H-1122 Budapest, HU;
KAPILLERNÉ DEZSOFI, Rita, Falk Miksa u. 3., H-1055 Budapest, HU;
GACSÁLYI, István, Baross u. 67, H-1201 Budapest, HU;
PALLAGI, Katalin, Hold u. 25, H-1054 Budapest, HU;
GIGLER, Gábor, Etele ut 73., H-1119 Budapest, HU;
LÉVAY, György, Gábor Áron u. 10, H-2092 Budakeszi, HU;
MÓRICZ, Krisztina, Damjanich u. 58, H-1071 Budapest, HU;
LEVELEKI, Csilla, Tárkony u.47., H-1029 Budapest, HU;
SZIRAY, Nóra, Boróka u. 12., H-1025 Budapest, HU;
SZÉNÁSI, Gábor, Lobogó u. 6/B, H-2096 Uröm, HU;
EGYED, András, Újvidék u. 58, H-1145 Budapest, HU;
HÁRSING, László, Gábor, Dembinszky u. 8, H-1071 Budapest, HU
(74) Beszédes, Stephan G., Patentanwalt, Münchener Strasse 80a, 85221 Dachau, DE

**(51) (7)** **EP 1742934 ***
C 07D 401/06
C 07D 401/14
C 07D 403/06
C 07D 417/14
A 61K 31/496
A 61P 1/00
A 61P 11/00
A 61P 17/00
A 61P 19/00
(23) 31.12.2010.
(30) SE 23.04.2004. 0401057
SE 10.01.2005. 0500057
(86) PCT/SE2005000574 20.04.2005.
(96) EP 05734934.2 20.04.2005. En
(87) WO2005101989 03.11.2005. 200544
(97) EP 1742934 17.01.2007. 200703 En
(41) 22.06.2011. 201125
**(54) PIPERIDINE DERIVATIVES AS MODULATORS OF CHEMOKINE RECEPTOR CCR5**
(71) AstraZeneca AB, 151 85 Södertälje, SE
(72) FAULL, Alan, AstraZeneca R & D Alderley, Alderley Park, Macclesfield, Cheshire SK10 4TG, GB;
TUCKER, Howard, AstraZeneca R & D Alderley, Alderley Park, Macclesfield, Cheshire SK10 4TG, GB

**(51) (8)** **EP 1836190 ***
***C 07D 401/06***
(23) 17.12.2010.
(30) US 06.01.2005. 641910 P
(86) PCT/US2006000261 05.01.2006.
(96) EP 06733613.1 05.01.2006. En
(87) WO2006074269 13.07.2006. 200628
(97) EP 1836190 26.09.2007. 200739 En
(41) 08.06.2011. 201123
**(54) PREPARATION OF PHARMACEUTICAL SALTS OF PIPERAZINE COMPOUNDS**
(71) Schering Corporation, 2000 Galloping Hill Road, Kenilworth, NJ 07033-0530, US
(72) WU, Wenxue, 53 Zaitz Farm Road, Princeton Junction, New Jersey 08550, US;
TRAN, Loc, Thanh, 235 Vasser Drive, Parsippany, New Jersey 08854, US;
D'SA, Bosco, 5 Leland Road, Edison, New Jersey 08817, US;
LIANG, Feng, 28 Potomac Road, Monmouth Junction, New Jersey 08852, US;
LEONG, William, 342 Edgewood Avenue, Westfield, New Jersey 07090, US;
LEE, Hong-Chang, 56 Lee Road, Livingston, New Jersey 07039, US;
KLOPFER, Kevin, 235 Old Farm Road, Flemington, New Jersey 08822, US;
SABESEN, Vijay, 320 Vallejo Drive, Apt. 21, Millbrae, California 94030, US
(74) Rollins, Anthony John, et al, Merck Sharp & Dohme Limited, European Patent Department, Hertford Road, Hoddesdon, Hertfordshire EN11 9BU, GB

**(51) (8)** **EP 1856094 ***
***C 07D 401/06***
***A 61K 31/4709***
***A 61P 11/06***
(23) 02.12.2010.
(30) GB 01.03.2005. 0504150
(86) PCT/GB2006000704 01.03.2006.
(96) EP 06709928.3 01.03.2006. En
(87) WO2006092579 08.09.2006. 200636
(97) EP 1856094 21.11.2007. 200747 En
(41) 25.05.2011. 201121
**(54) MICROCRYSTALLINE (5-FLUORO-2-METHYL-3-QUINOLIN-2-YLMETHYL-INDOL-1-YL)ACETIC ACID**
(71) Oxagen Limited, 91 Milton Park, Abingdon, Oxfordshire OX14 4RY, GB
(72) BOYD, Edward, Andrew, Evotec OAI, 151 Milton Park, Abingdon, OXON OX14 4RY, GB;
BROOKFIELD, Frederick, Arthur, Evotec OAI, 151 Milton Park, Abingdon, OXON OX14 4RY, GB;
BRENNAN, Christopher, James, Evotec OAI, 151 Milton Park, Abingdon, OXON OX14 4RY, GB;
PALMER, Christopher, Francis, Evotec OAI, 151 Milton Park, Abingdon, OXON OX14 4RY, GB;
PEARCEY, Leigh, Andre, Evotec OAI, 151 Milton Park, Abingdon, OXON OX14 4RY, GB;
LOVELL, James, Matthew, Evotec OAI, 151 Milton Park, Abingdon, OXON OX14 4RY, GB

(74) Roberts, Alison Christine, et al, Kilburn & Strode LLP, 20 red Lion Street, London WC1R 4PJ, GB

**(51) (8)** **EP 1891046 ***
***C 07D 401/12***
***A 61K 31/4402***
***A 61K 31/4184***
(23) 18.02.2011.
(30) DE 04.06.2005. 102005025728
(86) PCT/EP2006062847 01.06.2006.
(96) EP 06763468.3 01.06.2006. De
(87) WO2006131491 14.12.2006. 200650
(97) EP 1891046 27.02.2008. 200809 De
(41) 29.06.2011. 201126
**(54) POLYMORPHS OF ETHYL 3-[(2-{[4-(HEXYLOXYCARBONYLAMINO-IMINOMETHYL)PHENYLAMINO]METHYL}-1-METHYL-1H-BENZIMIDAZOLE-5-CARBONYL)PYRIDIN-2-YLAMINO]PROPIONATE**
(71) Boehringer Ingelheim International GmbH, Binger Strasse 173, 55216 Ingelheim am Rhein, DE;
Boehringer Ingelheim Pharma GmbH & Co. KG, Binger Strasse 173, 55216 Ingelheim am Rhein, DE
(72) SIEGER, Peter, Klingenaecker 7, 88441 Mittelbiberach, DE;
HAUEL, Norbert, Marderweg 12, 88433 Schemmerhofen, DE;
SCHMID, Rolf, Talstrasse 37, 88487 Baltringen, DE;
SOBOTTA, Rainer, Ludwig-richter-strasse 6, 55218 Ingelheim Am Rhein, DE
(74) Hammann, Heinz, et al, Boehringer Ingelheim Pharma GmbH & Co. KG, Binger Strasse 173, 55216 Ingelheim am Rhein, DE

**(51) (8)** **EP 2027109 ***
***C 07D 401/12***
***A 61K 31/4155***
***A 61P 35/00***
(23) 01.12.2010.
(30) US 05.05.2006. 746541 P
US 14.07.2006. 830967 P
(86) PCT/GB2007001655 04.05.2007.
(96) EP 07732684.1 04.05.2007. En
(87) WO2007129066 15.11.2007. 200746
(97) EP 2027109 25.02.2009. 200909 En
(41) 25.05.2011. 201121
**(54) 4- (2, 6-DICHLORO-BENZOYLAMINO) -1H-PYRAZOLE-S-CARBOXYLIC ACID (1-METHANESULPH0NYL-PIPERIDIN-4-YL) -AMIDE FOR THE TREATMENT OF CANCER**
(71) Astex Therapeutics Limited, 436 Cambridge Science Park, Milton Park, Cambridge, Cambridgeshire CB4 0QA, GB
(72) TREWARTHA, Gary, PPD, Granta Park, Cambridge CB21 6GQ, GB;
NAVARRO, Eva, Figueroa, 35 Romsey Road, Cambridge CB1 3DD, GB;
REES, David, Charles, 436 Cambridge Science Park, Milton Road, Cambridge CB4 0QA, GB;
VINKOVIC, Mladen, 436 Cambridge Science Park, Milton Road, Cambridge CB4 0QA, GB;
WOODHEAD, Andrew, James, 436 Cambridge Science Park, Milton Road, Cambridge CB4 0QA, GB;
WYATT, Paul, Graham, University of Dundee, Dow Street, Dundee, DD1 5EH, GB
(74) Hutchins, Michael Richard, Elkington and Fife LLP, Prospect House, 8 Pembroke Road, Sevenoaks, Kent TN13 1XR, GB

**(51) (8)** **EP 2065379**
***C 07D 401/12***
***C 07D 405/14***
***C 07D 493/10***
***C 07D 513/14***
***C 07D 519/00***
***A 61K 31/4439***
***A 61K 31/549***
***A 61P 1/04***
***A 61P 31/04***
***A 61P 43/00***
(23) 23.05.2011.
(30) JP 13.10.2006. 2006280285
(86) PCT/JP2007069863 11.10.2007.
(96) EP 07829601.9 11.10.2007. Ja
(87) WO2008047681 24.04.2008. 200817
(97) EP 2065379 03.06.2009. 200923 En
(41) 06.07.2011. 201127
**(54) BENZIMIDAZOLE COMPOUND HAVING GASTRIC ACID SECRETION INHIBITORY ACTIVITY**
(71) Eisai R&D Management Co., Ltd., 6-10, Koishikawa 4-chome, Bunkyo-ku, Tokyo 112-8088, JP
(72) UEDA, Masato, Tsukuba Research Laboratories, EISAI CO., LTD., 1-3, Tokodai 5-chome, Tsukuba-shi, Ibaraki 300-2635, JP;
IIDA, Daisuke, Tsukuba Research Laboratories, EISAI CO., LTD., 1-3, Tokodai 5-chome, Tsukuba-shi, Ibaraki 300-2635, JP;
KIKUCHI, Sachiko, Tsukuba Research Laboratories, EISAI CO., LTD., 1-3, Tokodai 5-chome, Tsukuba-shi, Ibaraki 300-2635, JP;
GOTODA, Masaharu, Tsukuba Research Laboratories, EISAI CO., LTD., 1-3, Tokodai 5-chome, Tsukuba-shi, Ibaraki 300-2635, JP
(74) HOFFMANN EITLE, Patent- und Rechtsanwälte, Arabellastraße 4, 81925 München, DE

**(51) (8)** **EP 2108016 ***
***C 07D 401/14***
***A 61K 31/506***
***A 61P 3/10***
***A 61P 35/00***
***A 61P 29/00***
(23) 18.01.2011.
(30) FR 05.01.2007. 0700066
(86) PCT/FR2008000004 02.01.2008.
(96) EP 08761729.6 02.01.2008. Fr
(87) WO2008099075 21.08.2008. 200834
(97) EP 2108016 14.10.2009. 200942 Fr
(41) 06.07.2011. 201127
**(54) 2-ANILINO-4-HETEROARYL PYRIMIDINE DERIVATIVES, AND PREPARATION THEREOF AS MEDICAMENTS, PHARMACEUTICAL COMPOSITIONS, AND IN PARTICULAR IKK INHIBITORS**
(71) Sanofi-Aventis, 174 Avenue de France, 75013 Paris, FR
(72) BABIN, Didier, c/o Sanofi-aventis, Département Brevets, 174, avenue de france, F-75013 Paris, FR;

BOUABOULA, Monsif, c/o Sanofi-aventis, Departement Brevets, 174, avenue de france, F-75013 Paris, FR;
CASELLAS, Pierre, c/o Sanof-Aventis, Département Brevets, 174, avenue de france, F-75013 Paris, FR;
MIGNANI, Serge, c/o Sanofi-aventis, Département Brevets, 174, avenue de france, F-75013 Paris, FR;
NGUEFACK, Jean-Flaubert, c/o Sanofi-aventis, Département Brevets, 174, avenue de france, F-75013 Paris, FR;
WAGNON, Jean, c/o Sanofi-aventis, Département Brevets, 174, avenue de france, F-75013 Paris, FR
(74) Le Pennec, Magali, Sanofi-Aventis, Direction Brevets, 174 Avenue de France, 75013 Paris, FR

**(51) (7)** **EP 1751143 ***
C 07D 403/12
A 61K 31/505
A 61P 35/00
(23) 30.11.2010.
(30) US 14.05.2004. 571312 P
(86) PCT/IB2005001201 02.05.2005.
(96) EP 05732043.4 02.05.2005. En
(87) WO2005111023 24.11.2005. 200547
(97) EP 1751143 14.02.2007. 200707 En
(41) 08.06.2011. 201123
**(54) PYRIMIDINE DERIVATIVES FOR THE TREATMENT OF ABNORMAL CELL GROWTH**
(71) Pfizer Products Inc., Eastern Point Road, Groton, CT 06340, US
(72) LUZZIO, Michael Joseph, Pfizer Global R & D, Eastern Point Road, Groton, CT 06340, US;
KATH, John Charles, Pfizer Global R & D, Eastern Point Road, Groton, CT 06340, US
(74) Dekker, Henrike Cornelie Christine, et al, Pfizer Limited, European Patent Department, Ramsgate Road, Sandwich, Kent CT13 9NJ, GB

**(51) (7)** **EP 1732919 ***
C 07D 409/04
A 61K 31/506
A 61P 35/00
C 07D 495/04
C 07D 417/14
C 07D 409/14
C 07D 413/14
(23) 24.12.2010.
(30) US 30.03.2004. 558342 P
(86) PCT/US2005010690 30.03.2005.
(96) EP 05760186.6 30.03.2005. En
(87) WO2005095386 13.10.2005. 200541
(97) EP 1732919 20.12.2006. 200651 En
(41) 29.06.2011. 201126
**(54) SUBSTITUTED THIOPHENE DERIVATIVES AS ANTI-CANCER AGENTS**
(71) Novartis Vaccines and Diagnostics, Inc., 4560 Horton Street, Emeryville, CA 94608, US
(72) LIN, Xiaodong, Chiron Corporation, P.O. Box 8097, Emeryville, California 94662-8097, US;
RICO, Alice, Chiron Corporation, P.O. Box 8097, Emeryville, California 94662-8097, US;
ZHOU, Yasheen, Chiron Corporation, P.O. Box 8097, Emeryville, California 94662-8097, US;
JEFFERSON, Ann B., Chiron Corporation, P.O. Box 8097, Emeryville, California 94662-8097, US;
WALTER, Annette, Chiron Corporation, P.O. Box 8097, Emeryville, California 94662-8097, US;
WANG, Xiaojing Michael, 4560 Horton Street, Emeryville, California 94608, US
(74) Marshall, Cameron John, et al, Carpmaels & Ransford, One Southampton Row, London, WC1B 5HA, GB

**(51) (8)** **EP 2167495 ***
***C 07D 409/12***
***A 61K 31/4412***
***A 61P 7/02***
(23) 11.12.2010.
(30) DE 20.06.2007. 102007028320
(86) PCT/EP2008004564 07.06.2008.
(96) EP 08759100.4 07.06.2008. De
(87) WO2008155034 24.12.2008. 200852
(97) EP 2167495 31.03.2010. 201013 De
(41) 08.06.2011. 201123
**(54) SUBSTITUTED OXAZOLIDINONES AND THE USE THEREOF**
(71) Bayer Schering Pharma Aktiengesellschaft, Müllerstrasse 178, 13353 Berlin, DE
(72) RÖHRIG, Susanne, Dietrich-Bonhoeffer-Strasse 66, 40724 Hilden, DE;
HÄRTER, Michael, Ernst-Ludwig-Kirchner-Strasse 56, 51375 Leverkusen, DE;
GNOTH, Mark, Jean, Am Hang 53, 40822 Mettmann, DE;
VON DEGENFELD, Georges, Carl-Rumpff-Strasse 41, 51373 Leverkusen, DE;
DITTRICH-WENGENROTH, Elke, Birkenhöhe 39, 42113 Wuppertal, DE;
BUCHMÜLLER, Anja, Baderweg 72a, 45259 Essen, DE;
ALLERHEILIGEN, Swen, Beckumsfeld 4, 45259 Essen, DE;
PERZBORN, Elisabeth, Am Tescher Busch 13, 42327 Wuppertal, DE;
GERDES, Christoph, Düsseldorfer Strasse 75, 51063 Köln, DE;
SCHLEMMER, Karl-Heinz, Wildsteig 22a, 42113 Wuppertal, DE;
AKBABA, Metin, Meygner Busch 46, 40880 Ratingen, DE

**(51) (8)** **EP 1777225**
***C 07D 413/04***
***A 61K 31/498***
***A 61K 31/538***
***A 61K 31/553***
***A 61K 45/00***
***A 61P 9/00***
***A 61P 25/04***
***A 61P 29/00***
***A 61P 37/08***
***A 61P 43/00***
***C 07D 401/04***
***C 07D 417/04***
***C 07D 417/14***
***C 07D 413/14***
(23) 21.01.2011.
(30) JP 15.07.2004. 2004208334
US 22.07.2004. 590180 P
JP 28.12.2004. 2004379551
US 06.01.2005. 641874 P
JP 28.04.2005. 2005133724
US 12.05.2005. 680072 P

(86) PCT/JP2005013446 14.07.2005.
(96) EP 05766173.8 14.07.2005. Ja
(87) WO2006006741 19.01.2006. 200603
(97) EP 1777225 25.04.2007. 200717 En
(41) 13.07.2011. 201128
**(54) FUSED BENZAMIDE COMPOUND AND VANILLOID RECEPTOR 1 (VR1) ACTIVITY INHIBITOR**
(71) Japan Tobacco, Inc., 2-1, Toranomon 2-chome, Minato-ku, Tokyo 105-8422, JP
(72) KOGA, Yoshihisa, Institute of Japan Tobacco Inc., Central Pharma. Research, 1-1, Murasaki-cho, Tatsuki-shi, Osaka 569-1125, JP;
YATA, Shinji, Institute of Japan Tobacco Inc., Central Pharma. Research, 1-1, Murasaki-cho, Takatsuki-shi, Osaka 569-1125, JP;
WATANABE, Takashi, Institute of Japan Tobacco Inc., Central Pharma Research, 1-1, Murasaki-cho, Takatsuki, Osaka 569-1125, JP;
MATSUO, Takuya, Institute of Japan Tobacco Inc., Central Pharma. Research, 1-1, Murasaki-cho, Tatsuki-shi, Osaka 569-1125, JP;
YAMASAKI, Takayuki, Institute of Japan Tobacco Inc, Central Pharma. Research, 1-1, Murasaki-cho, Tatsuki-shi, Osaka 569-1125, JP;
SAKATA, Masahiro, Institute of Japan Tobacco Inc., Central Pharma. Research, 1-1, Murasaki-cho, Tatsuki-shi, Osaka 569-1125, JP;
KONDO, Wataru, Pharmaceutical Division of Japan Tobacco Inc., 2-1 Toranomon 2-chome, Minato-ku, Tokyo 105-8422, JP;
OZEKI, Hidekazu, Institute of Japan Tobacco Inc., Central Pharma. Research, 1-1, Murasaki-cho, Takatsuki-shi, Osaka 569-1125, JP;
HORI, Yoshikazu, Institute of Japan Tobacco Inc., Central Pharma. Research, 1-1, Murasaki-cho, Takatsuki-shi, Osaka 569-1125, JP
(74) Vossius & Partner, Siebertstrasse 4, 81675 München, DE

**(51) (8)** **EP 1891060 ***
***C 07D 413/04***
(23) 01.12.2010.
(30) IN 30.05.2005. DE13812005
(86) PCT/IB2006001383 26.05.2006.
(96) EP 06744776.3 26.05.2006. En
(87) WO2006129158 07.12.2006. 200649
(97) EP 1891060 27.02.2008. 200809 En
(41) 01.06.2011. 201122
**(54) 3-INDAZOLYL-ISOXAZOLINE DERIVATIVES AS INHIBITORS OF PHOSPHODIESTERASE TYPE-IV**
(71) Ranbaxy Laboratories Limited, Plot No. 90, Sector-32, Gurgaon, Haryana 122001, Delhi, IN
(72) PALLE, Venkata P., G 901, Sylvan Heights Sanewadi, Aundh, Pune, Maharashtra 411007, IN;
BALACHANDRAN, Sarala, A-6 Nat. Inst. of Immunology, Aruna, Asif, Ali Marg, New Delhi, Delhi 110067, IN;
BAREGAMA, Lalit Kumar, Chyawan-Bhavan, Adarsh Nagar, Rajasthan, Kapasan 312202, IN;
CHAKLADAR, Saswati, C-60-x-2-c-block, Dilshad Garden, Delhi 110032, IN;
RAMNANI, Sarika, House No. 42, Sector 12-C, Lilashah Nagar, Gandhidham Kutch-370 201, Gujarat, IN;
MUTHUKAMAL, Nagarajan, 20/21 Malayamman Kovil Street, Kodumudi, Erode Dt., Tamil Nadu 638151, IN;
RAY, Abhijit, Sector C-1, 1408, Vasant Kunj, New Delhi, Delhi 110070, IN;
DASTIDAR, Sunanda G., B-138 Sarita Vihar, New Delhi, Delhi 110044, IN
(74) Cronin, Brian Harold John, CRONIN Intellectual Property, Chemin de Précossy 31, 1260 Nyon, CH

**(51) (8)** **EP 1854794**
***C 07D 417/12***
***A 61K 9/20***
***A 61K 31/4439***
***A 61P 3/10***
***A 61J 1/03***
(23) 07.12.2010.
(96) EP 06252444.2 09.05.2006. En
(97) EP 1854794 14.11.2007. 200746 En
(41) 25.05.2011. 201121
**(54) 2-N-{5-[[4-[2-(methyl-2-pyridinylamino) ethoxy] phenyl]methyl]-2-4-thiazolidinedione} butanedioic acid, methods of preparation and compositions with rosiglitazone maleate**
(71) TEVA PHARMACEUTICAL INDUSTRIES, LTD., 5 Basel Street, P.O. Box 3190, 49131 Petach-Tikva, IL
(72) Dolitzky, Yeudit, Lohame Hageto 32, Petach Tikva 49651, IL;
Avezov, Yoseph, Hartsit 46a/1, Netanya 42490, IL;
Spivak, Dina, Hamesila 16/10, Pardes-Hanna 37056, IL;
Leibovici, Minutza, Gershon Shastz 3/1, Netanya, IL;
Solomon, Ben-Zion, 6/3 Ben Yosef Shlomo Street, Petach Tikva 49501, IL
(74) Nachshen, Neil Jacob, et al, D Young & Co LLP, 120 Holborn, London EC1N 2DY, GB

**(51) (8)** **EP 2044066 ***
***C 07D 417/14***
***A 61P 31/00***
***A 61K 31/427***
(23) 31.12.2010.
(30) US 06.06.2006. 811482 P
(86) PCT/US2007013384 06.06.2007.
(96) EP 07795829.6 06.06.2007. En
(87) WO2007146039 21.12.2007. 200751
(97) EP 2044066 08.04.2009. 200915 En
(41) 29.06.2011. 201126
**(54) CRYSTALLINE FORMS OF N-[5-[[[5-(1,1-DIMETHYLETHYL)-2-OXAZOLYL]METHYL] THIO]-2-THIAZOLYL]-4-PIPERIDINECARBOXAMIDE**
(71) Bristol-Myers Squibb Company, Lawrenceville-Princeton Road, Princeton NJ 08543-4000, US
(72) GOUGOUTAS, Jack, Z., 101 Westerly Road, Princeton, NJ 08540, US;
MALLEY, Mary, F., 50 Merion Place, Lawrenceville, NJ 08648, US;
DIMARCO, John, D., 16 Neal Drive, East Brunswick, NJ 08816, US;
KIM, Soojin, 23 Country Club Way, Demarest, NJ 07627, US;
XIAO, Hai-yun, 22 Reid Avenue, Belle Mead, NJ 08502, US;
MISRA, Raj, Narain, 12 Eaton Place, Hopewell, NJ 08525, US
(74) Ritter, Thomas Kurt, Jones Day, Prinzregentenstraße 11, 80538 München, DE

**(51) (7)** **EP 1732925 ***
C 07D 471/04
A 61K 31/4745
(23) 21.12.2010.
(30) EP 17.03.2004. 04101101
EP 18.03.2004. 04101111
(86) PCT/EP2005051204 16.03.2005.
(96) EP 05717070.6 16.03.2005. En
(87) WO2005090345 29.09.2005. 200539
(97) EP 1732925 20.12.2006. 200651 En
(41) 15.06.2011. 201124
**(54) NOVEL N-(ALKOXYALKYL)CARBAMOYL-SUBSTITUTED 6-PHENYL-BENZONAPHTHYRIDINE DERIVATIVES AND THEIR USE AS PDE3/4 INHIBITORS**
(71) Nycomed GmbH, Byk-Gulden-Strasse 2, 78467 Konstanz, DE
(72) FLOCKERZI, Dieter, Ackerweg 26, 78476 Allensbach, DE;
KAUTZ, Ulrich, PROF.-Schmider-Str. 12, 78476 Allensbach, DE;
HATZELMANN, Armin, Alter Wall 3, 78467 Konstanz, DE;
BARSIG, Johannes, Am alten Sägewerk 14, 78467 Konstanz, DE;
MARX, Degenhard, Obere Reute 15, 78345 Moos, DE;
KLEY, Hans-Peter, Hafnerstr. 12, 78476 Allensbach, DE
(74) Wild, Robert, et al, Nycomed GmbH, Postfach 10 03 10, 78406 Konstanz, DE

**(51) (8)** **EP 1756107 ***
***C 07D 471/04***
***C 07D 487/08***
***C 07D 487/04***
***C 07D 211/74***
***C 07D 207/26***
***C 07D 207/08***
***C 07D 307/79***
***C 07D 295/08***
***C 07D 295/06***
***C 07D 211/34***
***A 61P 3/00***
(23) 03.01.2011.
(30) US 17.06.2004. 580958 P
(86) PCT/US2005021340 16.06.2005.
(96) EP 05760258.3 16.06.2005. En
(87) WO2006009789 26.01.2006. 200604
(97) EP 1756107 28.02.2007. 200709 En
(41) 29.06.2011. 201126
**(54) ARYL-SUBSTITUTED PIPERAZINE DERIVATIVES**
(71) NEUROGEN CORPORATION, 35 N.E. Industrial Road, Branford, CT 06405, US
(72) HUTCHISON, Alan, J., 27 Allison Drive, Madison, CT 06443, US;
CHENARD, Bertrand, L., 7 Whaling Drive, Waterford, CT 06385, US;
LI, Guiying, No. 8, Valley Court, Branford, CT 06405, US;
GHOSH, Manuka, 103 Nursey Lane, Madison, CT 06443, US;
TARRANT, James, G., 156 Handy Road, Hamden, CT 06518, US;
YOON, Taeyoung, 259 Wiswall Road, Newton, MA 02459, US;
LUKE, George, P., 17 Vienna Lane, Clinton, CT 06413, US;
LEE, Kyungae, 259 Wiswall Road, Newton, MA 02459, US;
O'DONNELL, Mary-Margaret, E., 79 Country Place, Shelton, CT 06484, US;
PRINGLE, Wallace, C., 34 East River Road, Guilford, CT 06437, US;
PETERSON, John, M., 119 Maple Avenue, Durham, CT 06422, US;
HODGETTS, Kevin, J., 224 Reservoir Road, Killingworth, CT 06419, US;
STEENSTRA, Cheryl, K., 15 North Street, Bath, ME 04530, US;
DOLLER, Dario, 20 Killen Road, Wallingford, CT 06492, US
(74) Smaggasgale, Gillian Helen, W.P. Thompson & Co, 55 Drury Lane, London WC2B 5SQ, GB

**(51) (8)** **EP 1888590 ***
***C 07D 487/04***
***A 61K 31/53***
(23) 04.01.2011.
(30) US 10.06.2005. 149525
(86) PCT/US2006022577 09.06.2006.
(96) EP 06784722.8 09.06.2006. En
(87) WO2006135796 21.12.2006. 200651
(97) EP 1888590 20.02.2008. 200808 En
(41) 22.06.2011. 201125
**(54) CRYSTALLINE FORMS OF A PYRROLOTRIAZINE COMPOUND**
(71) Bristol-Myers Squibb Company, Route 206 and Province Line Road, Princeton, NJ 08543-4000, US
(72) DIMARCO, John D., 16 Neal Drive, East Brunswick, New Jersey 08816, US;
GOUGOUTAS, Jack Z., 101 Westerly Road, Princeton, New Jersey 08540, US;
PATEL, Bharat P., 174 Shrewsbury Court, Pennington, New Jersey 08534, US
(74) Jones Day, Rechtsanwälte, Attorneys-at-Law, Patentanwälte, Prinzregentenstrasse 11, 80538 München, DE

**(51) (8)** **EP 2139329 ***
***C 07D 487/04***
***A 61K 31/519***
***A 61P 35/00***
(23) 17.12.2010.
(30) US 27.03.2007. 920246 P
US 27.03.2007. 728919
(86) PCT/US2008004007 27.03.2008.
(96) EP 08742312.5 27.03.2008. En
(87) WO2008118485 02.10.2008. 200840
(97) EP 2139329 06.01.2010. 201001 En
(41) 08.06.2011. 201123
**(54) NOVEL IMIDAZO BASED HETEROCYCLES**
(71) ABBOTT LABORATORIES, 100 Abbott Park Road, Abbott Park, IL 60064, US
(72) CALDERWOOD, David J., 4 McCarthy Circle, Framingham, Massachusetts 01702, US;
FRANK, Kristine E., 8 Pinewood Land, Worcester, MA 01609, US;
BETSCHMANN, Patrick, Murwiesenstrasse 43, CH-8057 Zurich, CH;
BREINLINGER, Eric C., 54 Hanson Road, Charlton, MA 01507, US;
DIXON, Richard W., 19 Nottingham Drive, Jefferson, MA 01522, US

(74) Modiano, Micaela Nadia, et al, Modiano & Partners, Thierschstrasse 11, 80538 München, DE

**(51) (8)** **EP 2212326 ***
***C 07D 487/04***
***A 61K 31/52***
***A 61P 35/00***
(23) 24.12.2010.
(30) US 23.08.2007. 957508 P
(86) PCT/GB2008050724 20.08.2008.
(96) EP 08788695.8 20.08.2008. En
(87) WO2009024824 26.02.2009. 200909
(97) EP 2212326 04.08.2010. 201031 En
(41) 15.06.2011. 201124
**(54) 2-ANILINOPURIN-8-ONES AS INHIBITORS OF TTK/MPS1 FOR THE TREATMENT OF PROLIFERATIVE DISORDERS**
(71) AstraZeneca AB, 151 85 Södertälje, SE
(72) ANDREWS, David, Michael, AstraZeneca R&D Alderley, Alderley Park, Macclesfield, Cheshire SK10 4TG, GB;
JONES, Clifford, David, AstraZeneca R&D Alderley, Alderley Park, Macclesfield, Cheshire SK10 4TG, GB;
SIMPSON, Iain, AstraZeneca R&D Alderley, Alderley Park, Macclesfield, Cheshire SK10 4TG, GB;
WARD, Richard, Andrew, AstraZeneca R&D Alderley, Alderley Park, Macclesfield, Cheshire SK10 4TG, GB

**(51) (8)** **EP 1943254 ***
***C 07D 493/10***
***C 07D 403/06***
***C 07F 5/02***
***C 07C 49/213***
***G 01N 31/22***
***C 07D 207/34***
(23) 22.12.2010.
(30) US 07.10.2005. 245529
(86) PCT/CN2006002177 25.08.2006.
(96) EP 06775495.2 25.08.2006. En
(87) WO2007041923 19.04.2007. 200716
(97) EP 1943254 16.07.2008. 200829 En
(41) 29.06.2011. 201126
**(54) REAGENTS FOR HIGHLY SPECIFIC DETECTION OF PEROXYNITRITE**
(71) The University of Hong Kong, Pokfulam Road, Hong Kong, CN
(72) YANG, Dan, Flat 16D, Glory Heights, 52 Lyttelton Road, Hong Kong, CN;
WANG, Huali, Flat 20B, Po Tak Building, 2 Woo Hop Street, Hong Kong, CN;
SUN, Zhenning, Flat 16C, Wo Fat Building, 533 Queen's Road West, Hong Kong, CN;
SHEN, Jiangang, Flat F, 28th Floor, Block 1,Melody Garden,Tuen Mun, Hong Kong, CN
(74) Ritter, Thomas Kurt, Jones Day, Prinzregentenstraße 11, 80538 München, DE

**(51) (8)** **EP 2044081 ***
***C 07D 493/22***
(23) 16.12.2010.
(30) US 22.06.2006. 815725 P
(86) PCT/US2007014020 15.06.2007.
(96) EP 07809574.2 15.06.2007. En
(87) WO2007149305 27.12.2007. 200752
(97) EP 2044081 08.04.2009. 200915 En
(41) 08.06.2011. 201123
**(54) IMPROVED OXIDATION PROCESS WITH ENHANCED SAFETY USEFUL IN THE MANUFACTURE OF MOXIDECTIN BY MEANS OF STABILISED 2-IODOXYBENZOIC ACID (SIBX)**
(71) Wyeth LLC, Five Giralda Farms, Madison, NJ 07940, US
(72) SAPIENZA, Stefania, Via della Ninfea 13, 95030 Pedara (ct), IT;
MASSARA, Pasquale, Via Torione 36, 89100 Reggio Calabria, IT;
CARACO, Marco, Via Arno n. 4, 96100 Siracusa, IT;
MIRAGLIA, Giuseppe, Via Tripoli 134, 95030 Ficarazzi-Acicastello, Catania, IT;
PATEL, Jignesh, 4 Cottonwood Court, Plainsboro, New Jersey 08536, US
(74) Cosway, Sarah Michelle, et al, Pfizer Limited, European Patent Department, Ramsgate Road, Sandwich, Kent CT13 9NJ, GB

**(51) (7)** **EP 1688420**
C 07D 495/04
A 61K 31/407
A 61K 31/4188
A 61K 31/454
A 61K 31/496
A 61K 31/5377
A 61K 38/21
A 61P 1/16
A 61P 31/14
A 61P 43/00
(23) 31.12.2010.
(30) JP 19.11.2003. 2003389976
(86) PCT/JP2004017518 18.11.2004.
(96) EP 04799807.5 18.11.2004. Ja
(87) WO2005049622 02.06.2005. 200522
(97) EP 1688420 09.08.2006. 200632 En
(41) 22.06.2011. 201125
**(54) 5-5-MEMBERED FUSED HETEROCYCLIC COMPOUND AND USE THEREOF AS HCV POLYMERASE INHIBITOR**
(71) Japan Tobacco Inc., 2-1, Toranomon 2-chome, Minato-ku, Tokyo 105-8422, JP
(72) MIZOJIRI,Ryo., Japan Tobacco Inc., 1-1,Murasaki-cho, Takatsuki-shi, Osaka 569-1125, JP;
HIRASHIMA, Shintaro, Japan Tobacco Inc., 1-1, Murasaki-cho, Takatsuki-shi, Osaka 569-1125, JP;
OKA, Takahiro, Japan Tobacco Inc., 1-1, Murasaki-cho, Tatkatsuki-shi, Osaka 569-1125, JP;
AOKI, Kenta, Japan Tobacco Inc., 1-1Murasaki-cho, Takatsuki-shi, Osaka 569-1125, JP;
NOJI, Satoru, Japan Tobacco Inc., 1-1, Murasaki-cho, Takatsuki-shi, Osaka 569-1125, JP;
ANDO, Izuru, Japan Tobacco Inc., 1-1, Murasaki-cho, Takatsuki-shi, Osaka 569-1125, JP;
SATO, Toshihiro, Japan Tobacco Inc., 1-1, Murasaki, Takatsuki-shi, Osaka 569-1125, JP;
NIWA, Yasushi, Japan Tobacco Inc., 1-1, Murasaki-cho, Takatsuki-shi, Osaka 569-1125, JP
(74) Vossius & Partner, Siebertstrasse 4, 81675 München, DE

**(51) (8)** **EP 1844053** *
***C 07D 495/04***
***C 07H 17/08***
***C 07D 498/04***
***A 61K 31/7048***
***A 61K 31/7052***
***A 61K 31/55***
***A 61P 29/00***
(23) 28.12.2010.
(30) US 13.01.2005. 643931 P
(86) PCT/IB2006001079 13.01.2006.
(96) EP 06727557.8 13.01.2006. En
(87) WO2006075255 20.07.2006. 200629
(97) EP 1844053 17.10.2007. 200742 En
(41) 15.06.2011. 201124
**(54) ANTI-INFLAMMATORY MACROLIDE CONJUGATES**
(71) Glaxo Group Limited, Glaxo Wellcome House, Berkeley Avenue, Greenford, Middlesex UB6 0NN, GB
(72) MERCEP, Mladen, GlaxoSmithKline istrazivacki centar Zagreb d.o.o., Prilaz baruna 29, 10000 Zagreb, HR;
MESIC, Milan, GlaxoSmithKline istrazivacki centar Zagreb d.o.o., Prilaz baruna 29, 10000 Zagreb, HR;
MARKOVIC, Stribor, GlaxoSmithKline istrazivacki centar Zagreb d.o.o., Prilaz baruna 29, 10000 Zagreb, HR;
PESIC, Dijana, GlaxoSmithKline istrazivacki centar Zagreb d.o.o., Prilaz baruna 29, 10000 Zagreb, HR;
OZIMEC LANDEK, Ivana, GlaxoSmithKline istrazivacki centar Zagreb d.o.o., Prilaz baruna 29, 1000 Zagreb, HR;
KOMAC, Marijana, GlaxoSmithKline istrazivacki centar Zagreb d.o.o., Prilaz baruna 29, 10000 Zagreb, HR;
MAKARUHA STEGIC, Oresta, GlaxoSmithKline istrazivacki centar Zagreb d.o.o., Prilaz baruna 29, 10000 Zagreb, HR;
SELMANI, Selvira, GlaxoSmithKline istrazivacki centar Zagreb d.o.o., Prilaz baruna 29, 10000 Zagreb, HR;
BANJANAC, Mihailo, GlaxoSmithKline istrazivacki centar Zagreb d.o.o., Prilaz baruna 29, 10000 Zagreb, HR;
TOMASKOVIC, Linda, GlaxoSmithKline istrazivacki centar Zagreg d.o.o, Prilaz baruna 29, 10000 Zagreb, HR
(74) Crawley, Karen Anne, GlaxoSmithKline, Corporate Intellectual Property (CN9.25.1), 980 Great West Road, Brentford, Middlesex TW8 9GS, GB

**(51) (8)** **EP 1893618** *
***C 07D 495/04***
(23) 01.12.2010.
(30) EP 25.05.2005. 05104495
EP 14.12.2005. 05112155
(86) PCT/EP2006062617 24.05.2006.
(96) EP 06755305.7 24.05.2006. En
(87) WO2006125815 30.11.2006. 200648
(97) EP 1893618 05.03.2008. 200810 En
(41) 01.06.2011. 201122
**(54) TETRAHYDROPYRIDOTHIOPHENES FOR USE IN THE TREATMENT OF CANCER**
(71) 4SC AG, Am Klopferspitz 19 a, 82152 Planegg - Martinsried, DE
(72) PEKARI, Klaus, Vogteistr. 45, 88441 Mittelbiberach, DE;
BECKERS, Thomas, Aeschenweg 12, 78464 Konstanz, DE;
BÄR, Thomas, Berggässle 5, 78479 Reichenau, DE;
SCHMIDT,Mathias, Kornblumenweg 4, 78465 Konstanz, DE;
DR.GIMMNICH, Petra, Berliner Str. 38, 78467 Konstanz, DE
(74) Kilger, Ute, et al, Forrester & Boehmert, Pettenkoferstrasse 20-22, 80336 München, DE

**(51) (8)** **EP 1896484** *
***C 07D 495/04***
(23) 01.12.2010.
(30) EP 25.05.2005. 05104499
EP 14.12.2005. 05112150
(86) PCT/EP2006062613 24.05.2006.
(96) EP 06755301.6 24.05.2006. En
(87) WO2006125813 30.11.2006. 200648
(97) EP 1896484 12.03.2008. 200811 En
(41) 01.06.2011. 201122
**(54) TETRAHYDROPYRIDOTHIOPHENES FOR USE IN THE TREATMENT OF CANCER**
(71) 4SC AG, Am Klopferspitz 19 a, 82152 Planegg - Martinsried, DE
(72) PEKARI, Klaus, Vogteistr. 45, 88441 Mittelbiberach, DE;
SCHMIDT, Mathias, Kornblumenweg 4, 78465 Konstanz, DE;
BÄR, Thomas, Berggässle 5, 78479 Reichenau, DE;
BECKERS, Thomas, Aeschenweg 12, 78464 Konstanz, DE;
GIMMNICH, Petra, Berlinerstr. 38, 78467 Konstanz, DE
(74) Kilger, Ute, et al, Forrester & Boehmert, Pettenkoferstrasse 20-22, 80336 München, DE

**(51) (8)** **EP 2010545** *
***C 07D 495/04***
(23) 21.12.2010.
(30) HU 09.03.2006. 0600194
(86) PCT/HU2007000021 08.03.2007.
(96) EP 07733839.0 08.03.2007. En
(87) WO2007102037 13.09.2007. 200737
(97) EP 2010545 07.01.2009. 200902 En
(41) 08.06.2011. 201123
**(54) A PROCESS FOR THE PREPARATION OF POLYMORPH FORM I OF (S)-(+)-METHYL-ALPHA-(2-CHLOROPHENYL)-6,7-DIHYDRO-THIENO-[3,2-C]PYRIDINE-5(4H)-ACETATE HYDROGEN SULFATE**
(71) Richter Gedeon Nyrt., Gyömröi út 19-21, 1103 Budapest, HU
(72) GARADNAY, Sándor, Bánomi Iakótelep 12, H-2500 Esztergom, HU;
GREINER, István, Hüvösvölgyi út 201, H-1021 Budapest, HU;
NEU, József, Hegedus Gyula u. 44, H-1133 Budapest, HU
(74) HOFFMANN EITLE, Patent- und Rechtsanwälte, Arabellastraße 4, 81925 München, DE

**(51) (8)** **EP 2134721** *
***C 07D 498/04***
***C 07D 498/14***
***C 07D 519/00***
***A 61K 31/424***
***A 61P 31/04***
(23) 04.01.2011.
(30) US 02.03.2007. 904686 P
(86) PCT/US2008002712 29.02.2008.
(96) EP 08726283.8 29.02.2008. En
(87) WO2008108988 12.09.2008. 200837
(97) EP 2134721 23.12.2009. 200952 En
(41) 29.06.2011. 201126

**(54) ANTIMICROBIAL HETEROCYCLIC COMPOUNDS FOR TREATMENT OF BACTERIAL INFECTIONS**
(71) Micurx Pharmaceuticals, Inc., 29540 Kohoutek Way, Union City, CA 94587, US
(72) GORDEEV, Mikhail, Fedorovich, 5072 Stone Canyon Drive, Castro Valley, CA 94552, US;
YUAN, Zhengyu, 821 Hamilton Avenue, Palo Alto, CA 94301, US;
LIU, Jinqian, 991 Addison Avenue, Palo Alto, CA 94301-3002, US
(74) Williams, Gareth Owen, et al, Marks & Clerk LLP, 62-68 Hills Road, Cambridge, CB2 1LA, GB

**(51) (8)** **EP 1828223** *
***C 07J 63/00***
***A 61K 31/56***
***A 61P 31/18***
***C 07J 53/00***
(23) 19.01.2011.
(30) US 12.11.2004. 626886 P
US 16.02.2005. 653080 P
(86) PCT/US2005041043 14.11.2005.
(96) EP 05820967.7 14.11.2005. En
(87) WO2006053255 18.05.2006. 200620
(97) EP 1828223 05.09.2007. 200736 En
(41) 13.07.2011. 201128
**(54) NOVEL BETULIN DERIVATIVES, PREPARATION THEREOF AND USE THEREOF**
(71) Panacos Pharmaceuticals, Inc., 209 Perry Parkway, Gaithersburg, MD 20877, US
(72) ROBINSON, Garry N., 119 Upshire Circle, Gaithersburg, Maryland, US;
WILD, Carl T., 19008 Oxcart Place, Gaithersburg, Maryland, US;
ASHTON, Mark, 28 Beech Road, Headington, Oxford OX3 7SJ, GB;
THOMAS, Russell, Via Bianchi Bandinelli 6/6, Siena, IT;
MONTALBETTI, Christian, 23 Reading Road, Wallingford Oxfordshire OX10 9DS, GB;
COULTER, Thomas Stephen, Orchard Lodge, Grove Bridge, Wantage Oxfordshire OX12 7PA, GB;
MAGARACI, Filippo, 179 Broadway Didcot, Oxfordshire OX14 3TU, GB;
TOWNSEND, Robert James, 102 Alexander Close, Abingdon, Oxfordshire OX14 1XD, GB;
NITZ, Theodore John, 20601 Top Ridge Road, Boyds, Maryland 20841, US
(74) Ehlich, Eva Susanne, Maiwald Patentanwalts GmbH, Elisenhof, Elisenstraße 3, 80335 München, DE

**(51) (8)** **EP 1989219** *
***C 07K 1/30***
(23) 07.12.2010.
(30) EP 13.02.2006. 06101571
(86) PCT/EP2007051192 08.02.2007.
(96) EP 07704445.1 08.02.2007. En
(87) WO2007093548 23.08.2007. 200734
(97) EP 1989219 12.11.2008. 200846 En
(41) 01.06.2011. 201122
**(54) METHOD FOR THE MANUFACTURE OF LANTIBIOTICS**
(71) Boehringer Ingelheim Vetmedica GmbH, Binger Strasse 173, 55216 Ingelheim am Rhein, DE
(72) MUELLNER, Hubert, Staufenstr. 1, 65779 Kelkheim, DE;
FOLGER, Martin A., Eisenacher Str. 18, 55218 Ingelheim Am Rhein, DE;
WERNER, Andreas, Strohmayergasse 6, 1060 Wien, AT;
GIERLICH, Uwe, Gürtlerstrasse 2, 55128 Mainz, DE;
EYER, Kurt, Hengart 13, CH-3902 Glis, CH;
HEINZMANN, Klaus, Unterstalden, CH-3932 Visperterminen, CH;
SHAW, Nicholas M., St. Jodernstrasse 24, CH-3930 Visp, CH;
WYER, Fabian, Sandstrasse 35, CH-3931 Lalden, CH
(74) Hammann, Heinz, et al, Boehringer Ingelheim GmbH, CD-Patents, Binger Straße 173, 55216 Ingelheim am Rhein, DE

**(51) (8)** **EP 1778717** *
***C 07K 5/06***
***C 07D 403/02***
(23) 22.12.2010.
(30) US 16.07.2004. 892400
(86) PCT/US2005024351 08.07.2005.
(96) EP 05770730.9 08.07.2005. En
(87) WO2006019632 23.02.2006. 200608
(97) EP 1778717 02.05.2007. 200718 En
(41) 29.06.2011. 201126
**(54) CELL ADHESION INHIBITORS**
(71) Biogen Idec MA Inc., 14 Cambridge Center, Cambridge, MA 02142, US
(72) LEE, Wen-Cherng, 192 Spring Street, Lexington, MA 02421, US;
PEPINSKY, Blake, R., 30 Falmouth Road, Arlington, MA 02474, US;
CORNEBISE, Mark, 22 Gilbert Street, Watertown, MA 02472, US;
SCOTT, Daniel, 42 Bradyll Road, Weston, MA 02493, US;
PETER, Russell, C., 343 Hudson Road, Stow, MA 01775, US
(74) Adams, Harvey Vaughan John, et al, Mathys & Squire LLP, 120 Holborn, London, EC1N 2SQ, GB

**(51) (8)** **EP 1874803** *
***C 07K 14/195***
***C 07K 14/33***
***A 61K 38/00***
(23) 02.12.2010.
(30) DE 26.04.2005. 102005019302
(86) PCT/EP2006003896 26.04.2006.
(96) EP 06724595.1 26.04.2006. De
(87) WO2006114308 02.11.2006. 200644
(97) EP 1874803 09.01.2008. 200802 De
(41) 25.05.2011. 201121
**(54) CARRIER FOR TARGETING NERVE CELLS**
(71) Toxogen GmbH, Friedrich-Ebert-Str. 27, 30851 Langenhagen, DE;
Merz Pharma GmbH & Co. KGaA, Eckenheimer Landstrasse 100-104, 60318 Frankfurt, DE
(72) RUMMEL, Andreas, Kronenstrasse 24, 30161 Hannover, DE;
WEIL, Tanja, Eschersheimer Landstrasse 91, 60322 Frankfurt am Main, DE;
GUTAITS, Aleksandrs, Latvian Inst. of Org. Synt., 21 Aizkraukles St., LV-1006 Riga, LV

(74) Friede, Thomas, Bardehle Pagenberg, Postfach 86 06 20, 81633 München, DE

**(51) (7)** **EP 1745073 ***
C 07K 14/705
C 07K 14/71
C 07K 14/715
A 61K 38/04
(23) 01.12.2010.
(30) US 14.05.2004. 571289 P
US 18.06.2004. 580990 P
US 30.03.2005. 666825 P
(86) PCT/US2005017051 13.05.2005.
(96) EP 05752088.4 13.05.2005. En
(87) WO2005113596 01.12.2005. 200548
(97) EP 1745073 24.01.2007. 200704 En
(41) 25.05.2011. 201121
**(54) CELL SURFACE RECEPTOR ISOFORMS AND METHODS OF IDENTIFYING AND USING THE SAME**
(71) Symphogen A/S, Elektrovej, Building 375, 2800 Lyngby, DK
(72) JIN, Pei, 320 Curtner Avenue, Unit D, Palo Alto, CA 94306, US;
SHEPARD, Michael, H., 75 Magellan Avenue, San Francisco, CA 94116, US
(74) Salka, Jeffrey, Symphogen A/S, Elektrovej, Building 375, 2800 Lyngby, DK

**(51) (8)** **EP 2035454 ***
***C 07K 16/10***
(23) 30.12.2010.
(30) US 19.05.2006. 801951 P
(86) PCT/US2007012136 21.05.2007.
(96) EP 07867130.2 21.05.2007. En
(87) WO2008060331 22.05.2008. 200821
(97) EP 2035454 18.03.2009. 200912 En
(41) 22.06.2011. 201125
**(54) ANTIBODIES TO SARS CORONAVIRUS**
(71) Amgen Inc., 1120 Veterans Boulevard, ASF1/1146, South San Franciso, CA 94080, US
(72) BABCOOK, John S., 4480 West 12th Avenue, Vancouver, British Columbia, V6R 2R2, CA;
PRABHAKAR, Bellur S., 511 St. Johns Ct., Oakbrook, IL 60523, US;
COUGHLIN, Melissa, 708 South Laflin, Apt 2R, Chicago, IL 60657, US
(74) Evenson, Jane Harriet, et al, Mathys & Squire LLP, 120 Holborn, London EC1N 2SQ, GB

**(51) (8)** **EP 2125890 ***
***C 07K 16/18***
***C 07K 16/40***
***G 01N 33/53***
***G 01N 33/566***
***G 01N 33/573***
***G 01N 33/68***
***C 12N 5/12***
(23) 04.01.2011.
(30) US 19.01.2007. 881190 P
(86) PCT/US2008000639 18.01.2008.
(96) EP 08713167.8 18.01.2008. En
(87) WO2008091535 31.07.2008. 200831
(97) EP 2125890 02.12.2009. 200949 En
(41) 22.06.2011. 201125
**(54) ANTIBODIES TO PHOSPHORYLATED-IRAK4**
(71) Biogen Idec MA Inc., 14 Cambridge Center, Cambridge, Massachusetts 02142, US
(72) GORELIK, Leonid, 216 Parke Avenue, Quincy, MA 02171, US;
BAKER, Darren, P., 240 Central Street, Hingham, MA 02043, US;
HESSION, Catherine, A., 35 Otis Hill Road, Hingham, MA 02043, US;
VAN DE MARK, Karyn, 5 Diana Drive, Woburn, MA 01801, US;
ARDUNINI, Robert, M., 21 Mystic Street, Unit 1, Charlestown, MA 02129, US;
WILDES, Craig, 11 Marcella Street, Cambridge, MA 02142, US
(74) Adams, Harvey Vaughan John, et al, Mathys & Squire LLP, 120 Holborn, London, EC1N 2SQ, GB

**(51) (8)** **EP 1802660 ***
***C 07K 16/28***
***A 61P 35/02***
***A 61P 19/02***
***A 61P 25/00***
(23) 06.12.2010.
(30) US 08.09.2004. 607834 P
US 30.03.2005. 666550 P
(86) PCT/US2005032015 07.09.2005.
(96) EP 05795474.5 07.09.2005. En
(87) WO2006029275 16.03.2006. 200611
(97) EP 1802660 04.07.2007. 200727 En
(41) 15.06.2011. 201124
**(54) METHODS OF USING DEATH RECEPTOR LIGANDS AND CD20 ANTIBODIES**
(71) Genentech, Inc., 1 DNA Way, South San Francisco CA 94080-4990, US
(72) ASHKENAZI, Avi J., 1456 Tarrytown Street, San Mateo, California 94402, US
(74) Kiddle, Simon John, et al, Mewburn Ellis LLP, 33 Gutter Lane, London, EC2V 8AS, GB

**(51) (8)** **EP 1844076 ***
***C 07K 16/28***
***C 07K 16/30***
***C 12N 15/13***
***C 12N 15/85***
***A 61K 47/48***
***C 12N 5/10***
***C 12N 1/21***
***A 61K 39/395***
***A 61P 35/00***
***G 01N 33/577***
***G 01N 33/574***
(23) 10.02.2011.
(30) US 31.01.2005. 648541 P
US 05.01.2006. 756844 P
(86) PCT/US2006003502 31.01.2006.
(96) EP 06720045.1 31.01.2006. En
(87) WO2006083936 10.08.2006. 200632
(97) EP 1844076 17.10.2007. 200742 En
(41) 15.06.2011. 201124
**(54) ANTI-EPHB2 ANTIBODIES AND METHODS USING SAME**

(71) Genentech, Inc., 1 DNA Way, South San Francisco CA 94080-4990, US
(72) MAO, Weiguang, 1613 De Anza Boulevard, San Mateo, California 94403, US;
POLAKIS, Paul, 260 Corte Madera Avenue, Mill Valley California 94941, US
(74) Kiddle, Simon John, et al, Mewburn Ellis LLP, 33 Gutter Lane, London, EC2V 8AS, GB

**(51) (8)** **EP 2007812 ***
***C 07K 16/28***
***A 61K 39/395***
***A 61P 7/06***
(23) 21.01.2011.
(30) US 14.04.2006. 792174 P
(86) PCT/US2007009030 13.04.2007.
(96) EP 07755338.6 13.04.2007. En
(87) WO2007120766 25.10.2007. 200743
(97) EP 2007812 31.12.2008. 200901 En
(41) 13.07.2011. 201128
**(54) ERYTHROPOIETIN RECEPTOR AGONISTS**
(71) Amgen Inc., One Amgen Center Drive, Thousand Oaks, CA 91320-1799, US
(72) BORGES, Luis, 9705 NE Beach Crest Drive, Bainbridge Island, WA 98110-4352, US;
KETCHEM, Randal R., 6332 152nd Street SE, Snohomish, WA 98296, US;
LIM, Ai Ching, 7105 82nd Avenue SE, Mercer Island, WA 98040, US;
MEHLIN, Christopher, 2806 NW 61st Street, Seattle, WA 98107, US;
ZHOU, Hongxing, 6324 151st Avenue SE, Bellevue, WA 98006, US
(74) Grünecker, Kinkeldey, Stockmair & Schwanhäusser, Anwaltssozietät, Leopoldstrasse 4, 80802 München, DE

**(51) (8)** **EP 1957541 ***
***C 07K 19/00***
(23) 31.12.2010.
(30) US 21.11.2005. 738647 P
(86) PCT/US2006045056 21.11.2006.
(96) EP 06838182.1 21.11.2006. En
(87) WO2007062037 31.05.2007. 200722
(97) EP 1957541 20.08.2008. 200834 En
(41) 22.06.2011. 201125
**(54) COMPOSITIONS AND METHODS OF PRODUCING HYBRID ANTIGEN BINDING MOLECULES AND USES THEREOF**
(71) Merck Serono SA, Centre Industriel, 1267 Coinsins, Vaud, CH
(72) MCKENNA, Sean, D., 679 Lincoln Street, Duxbury, MA 02332, US;
CAMPBELL, Robert, K., 25 Meadowbrook Drive, Wrentham, MA 02093, US;
JIANG, Xuliang, 73 Kelley Drive, Braintree, MA 02184, US;
DE-LUCA, Giampiero, Chemin De Conches 15B, 1231 Conches, CH;
YANG, Meijia, 6 Catbird Lane, East Lyme, CT 06333, US;
KELTON, Christie, Ann, 4 Valentine Road, Hopkinton, MA 01748, US;
ARKINSTALL, Stephen, J., 31 Marsh Street, Belmont, MA 02478, US;
HE, Chaomei, 10 Brookdale Avenue, Wellesley, MA 02482, US;
SCHWEICKHARDT, Rene, Lynn, 1 Metacomet Street, Medfield, MA 02169, US
(74) Merck Serono SA - Geneva, Intellectual Property, 9, chemin des Mines, 1202 Geneva, CH

**(51) (8)** **EP 2196495**
***C 08K 3/36***
***C 08J 5/00***
(23) 17.12.2010.
(96) EP 08171345.5 11.12.2008. De
(97) EP 2196495 16.06.2010. 201024 De
(41) 22.06.2011. 201125
**(54) Use of oxide-containing compositions to improve the barrier properties of polymer materials**
(71) Fraunhofer-Gesellschaft zur Förderung der, angewandten Forschung e.V., Hansastrasse 27c, 80686 München, DE
(72) Schmid, Helmut, Briegelstr. 22, 72250, Freudenstadt, DE;
Eckl, Wilhelm, Grundstrasse 8, 76228 Wolfartsweier, DE
(74) Gille Hrabal Struck Neidlein Prop Roos, Patentanwälte, Brucknerstrasse 20, 40593 Düsseldorf, DE

**(51) (8)** **EP 1951849 ***
***C 10L 9/02***
***C 10L 5/00***
***C 10L 9/08***
***C 10L 9/10***
(23) 29.11.2010.
(30) AU 26.10.2005. 2005905934
AU 05.12.2005. 2005906808
(86) PCT/AU2006001604 26.10.2006.
(96) EP 06790435.9 26.10.2006. En
(87) WO2007048198 03.05.2007. 200718
(97) EP 1951849 06.08.2008. 200832 En
(41) 08.06.2011. 201123
**(54) PROCESS, SYSTEM AND APPARATUS FOR PASSIVATING CARBONACEOUS MATERIALS**
(71) Deveraux Holdings Pty Ltd, 28 The Esplanade, Perth, Western Australia 6000, AU;
Corky's Carbon and Combustion Pty Ltd, 386 Maitland Road, Mayfield, NSW 2304, AU
(72) COLEMAN, James, 1/58 Mitchell Street, Bondi Beach, New South Wales 2026, AU;
CORK, David, 386 Maitland Road, Mayfield NSW 2304, AU
(74) Minoja, Fabrizio, Bianchetti Bracco Minoja S.r.l., Via Plinio, 63, 20129 Milano, IT

**(51) (7)** **EP 1694830 ***
C 12N 7/00
C 12N 7/02
C 12N 5/10
C 12N 15/63
C 07K 14/165
C 07K 16/10
A 61K 39/215
G 01N 33/569
(23) 20.01.2011.
(30) EP 18.11.2003. 03078613
EP 01.12.2003. 03078772
(86) PCT/NL2004000805 18.11.2004.
(96) EP 04808721.7 18.11.2004. En
(87) WO2005049814 02.06.2005. 200522

(97) EP 1694830 30.08.2006. 200635 En
(41) 06.07.2011. 201127
**(54) NOVEL ATYPICAL PNEUMONIA-CAUSING VIRUS**
(71) CoroNovative B.V., Dr. Molewaterplein 50, 3015 GE Rotterdam, NL
(72) DE JONG, Jan, Cornelis, Krugerlaan 205, NL-2806 EH Gouda, NL;
BESTEBROER, Theodorus, Marinus, Tournooi 47, NL-2924 VE Krimpen aan den IJssel, NL;
SIMON, James, Henry, Matthew, Lauriersgracht 119 III, NL-1016 RK Amsterdam, NL;
FOUCHIER, Ronaldus, Adrianus, Maria, Essenburgsingel 44a, NL-3021 AR Rotterdam, NL;
OSTERHAUS, Albertus Dominicus Marcellinus, E., Karel Rogierstraat 22, B-2000 Antwerpen-Zuid, BE
(74) van Loon, C.J.J., et al, Vereenigde, Johan de Wittlaan 7, 2517 JR Den Haag, NL

---

**(51) (8)** **EP 1931783 ***
***C 12N 15/12***
***C 12N 15/63***
***C 07K 14/705***
***C 12N 5/10***
***A 61K 31/713***
***A 61K 35/12***
***A 61K 38/17***
***C 12P 21/02***
(23) 14.12.2010.
(30) US 09.09.2005. 715934 P
US 14.03.2006. 781723 P
US 21.07.2006. 832515 P
US 21.07.2006. 490997
(86) PCT/US2006035729 11.09.2006.
(96) EP 06814610.9 11.09.2006. En
(87) WO2007030834 15.03.2007. 200711
(97) EP 1931783 18.06.2008. 200825 En
(41) 08.06.2011. 201123
**(54) CHIMERIC HCN CHANNELS**
(71) The Trustees of Columbia University in the City of, New York, 535 West 116th Street, New York, NY 10027, US;
The Research Foundation of the State University of, New York, 35 State Street, Albany, NY 12207, US
(72) COHEN, Ira, S., 23 Hawks Nest Road, Stony Brook, NY 11790, US;
ROSEN, Michael, R., 25 East 86th Street, Apt. 14C, New York, NY 10028, US;
BRINK, Peter, R., 101 Dyke Road, Setauket, NY 11733, US;
ROBINSON, Richard, B., 67 Roosevelt Street, Cresskill, NJ 07626, US
(74) Pohlman, Sandra M., df-mp, Fünf Höfe, Theatinerstrasse 16, 80333 München, DE

---

**(51) (8)** **EP 1877564 ***
***C 12N 15/82***
***G 01N 33/50***
(23) 04.01.2011.
(30) US 05.05.2005. 677985 P
(86) PCT/US2006017490 05.05.2006.
(96) EP 06759186.7 05.05.2006. En
(87) WO2006121902 16.11.2006. 200646
(97) EP 1877564 16.01.2008. 200803 En
(41) 22.06.2011. 201125
**(54) INTERACTION OF GLYPHOSATE WITH PHOTOSYSTEM II INHIBITOR HERBICIDES AS A SELECTION TOOL FOR ROUNDUP READY EVENTS**
(71) Monsanto Technology, LLC, 800 North Lindbergh Boulevard, St. Louis, MO 63167, US
(72) VOSS, Steven T., Monsanto Company, 800 N. Lindbergh Boulevard, St. Louis, MO 63167, US;
PROSCH, S. Douglas, Monsanto Company, 800 N. Lindbergh Boulevard, St. Louis, MO 63167, US
(74) Bosch, Henry, et al, Office Hanssens Colens, Square Marie-Louise, 40 bte 19, 1000 Bruxelles, BE

---

**(51) (8)** **EP 1825264 ***
***C 12Q 1/34***
***C 12M 1/34***
(23) 27.05.2011.
(30) US 03.12.2004. 633114 P
(86) PCT/US2005043617 02.12.2005.
(96) EP 05852751.6 02.12.2005. En
(87) WO2006060652 08.06.2006. 200623
(97) EP 1825264 29.08.2007. 200735 En
(41) 13.07.2011. 201128
**(54) METHODS AND DEVICES FOR DETECTING PANCREATIC LIPASE**
(71) IDEXX LABORATORIES, INC., One Idexx Drive, Westbrook, ME 04092, US
(72) HUTH, Stacey, Pazar, 85 Village Brook Road, Yarmouth, ME 04096, US;
STRONG-TOWNSEND, Marilyn, I., 99 Anderson Avenue, Yarmouth, ME 04096, US
(74) HOFFMANN EITLE, Patent- und Rechtsanwälte, Arabellastraße 4, 81925 München, DE

---

**(51) (8)** **EP 1781824 ***
***C 12Q 1/68***
(23) 28.12.2010.
(30) US 25.08.2004. 604323 P
(86) PCT/US2005029782 23.08.2005.
(96) EP 05793413.5 23.08.2005. En
(87) WO2006026222 09.03.2006. 200610
(97) EP 1781824 09.05.2007. 200719 En
(41) 22.06.2011. 201125
**(54) NOVEL GENE DISRUPTIONS, COMPOSITIONS AND METHODS RELATING THERETO**
(71) Genentech, Inc., 1 DNA Way, South San Francisco CA 94080-4990, US;
Lexicon Pharmaceuticals, Inc., 8800 Technology Forest Place, The Woodlands, TX 77381, US
(72) BRENNAN, Jane, 700 Steiner Street 702, San Francisco, CA 94117, US;
DESAUVAGE, Frederic, 187 Shooting Star Isle, Foster City, CA 94404, US;
EDWARDS, Joel, 62 North Goldenvine Circle, The Woodlands, TX 77382, US;
HUANG, Wenhu, 10 Shellbark Place, The Woodlands, TX 77382, US;
MONTGOMERY, Charles, P.O. Box 527, Jay, OK 74346-0527, US;
PAYNE, Bobby Joe, 23 Acorn Cluster Court, The Woodlands, TX 77381, US;
SHI, Zheng-Zheng, 53 Silver Crescent Court, The Woodlands, TX 77382, US;

SPARKS, Mary Jean, 7218 Black Forest Drive, Magnolia, TX 77354, US;
VOGEL, Peter, 7 Graylin Woods Place, The Woodlands, TX 77381, US;
YE, Weilan, 119 Barkentine Street, Foster City, CA 94404, US
(74) Denison, Christopher Marcus, et al, Mewburn Ellis LLP, 33 Gutter Lane, London, EC2V 8AS, GB

**(51) (8)** **EP 1818413**
***C 12Q 1/68***
(23) 20.02.2011.
(96) EP 06075283.9 10.02.2006. En
(97) EP 1818413 15.08.2007. 200733 En
(41) 29.06.2011. 201126
**(54) Method of determining outcome of non small-cell lung cancer according to XRCC3 polymorphism**
(71) Pangaea Biotech, S.A., USP Instituto Universitario Dexeus, Departamento de Oncologia, Sabino Arana 5-19, 08028 Barcelona, ES
(72) Rosell Costa, Rafael, Institut Català d'Oncologia, Hospital Germans Trias i Pujol, Ctra. Canyet, s/n, 08916 Badalona, ES; Tarón Roca, Miguel, Institut Català d'Oncologia, Hospital Germans Trias i Pujol, Ctra. Canyet, s/n, 08916 Badalona, ES
(74) ABG Patentes, S.L., Avenida de Burgos 16D, Edificio Euromor, 28036 Madrid, ES

**(51) (8)** **EP 2004854** *
***C 12Q 1/68***
***A 61K 31/337***
(23) 21.12.2010.
(30) EP 29.03.2006. 06075767
(86) PCT/EP2007053054 29.03.2007.
(96) EP 07727526.1 29.03.2007. En
(87) WO2007110450 04.10.2007. 200740
(97) EP 2004854 24.12.2008. 200852 En
(41) 15.06.2011. 201124
**(54) METHOD OF PREDICTING SURVIVAL OF A NON-SMALL-CELL LUNG CANCER PATIENT TO A CHEMOTHERAPEUTIC TREATMENT**
(71) Pangaea Biotech, S.A., USP Instituto Universitari Dexeus, Departamento de Oncologia, Sabino Arana 5-19, 08028 Barcelona, ES
(72) ROSELL COSTA, Rafael, Institut Català d'Oncologia, Hospital Germans Trias i Pujol, Ctra. Canyet, s/n, E-08916 Badalona, ES;
TARÓN ROCA, Miguel, Institut Català d'Oncologia, Hospital Germans Trias i Pujol, Ctra. Canyet, s/n, E-08916 Badalona, ES
(74) ABG Patentes, S.L., Avenida de Burgos 16D, Edificio Euromor, 28036 Madrid, ES

**(51) (8)** **EP 2046994** *
***C 12Q 1/68***
***C 12P 19/34***
***C 07H 21/04***
(23) 04.01.2011.
(30) US 14.07.2006. 807376 P
(86) PCT/US2007016104 16.07.2007.
(96) EP 07836081.5 16.07.2007. En
(87) WO2008010975 24.01.2008. 200804
(97) EP 2046994 15.04.2009. 200916 En
(41) 06.07.2011. 201127
**(54) EARLY DETECTION AND PROGNOSIS OF COLON CANCERS**
(71) The Johns Hopkins University, 100 N. Charles Street, Baltimore MD 21201, US;
Oncomethylome Sciences, S.A., Bio-Incubator, Gaston Geenslaan 1, 3000 Leuven, BE
(72) BAYLIN, Stephen B., The Johnson Hopkins University, 100 North Charles Street, Baltimore, MD 21201, US;
CRIEKINGE, Wim Van, Chu Niveau +4, Tour 4 de Pharmacie (b?timent 36), Avenue de l'Hospital 1, 4000 Sart-Tilman (Lige), BE;
SCHUEBEL, Kornel E., The Johns Hopins University, 100 North Charles Street, Baltimore, MD 21201, US;
COPE, Leslie, The Johns Hopkins University, 100 North Charles Street, Baltimore, MD 21201, US;
SUZUKI, Hiromi, First Department Of Internal Medecine, Sapporo Medical University, Sapporro, 060-8556, JP;
HERMAN, Jim, The Johns Hopkins University, 100 North Charles Street, Baltimore, MD 21201, US
(74) Tombling, Adrian George, et al, Withers & Rogers LLP, Goldings House, 2 Hays Lane, London, SE1 2HW, GB

**(51) (8)** **EP 2130928**
***C 12Q 1/68***
(23) 29.12.2010.
(96) EP 08104225.1 02.06.2008. En
(97) EP 2130928 09.12.2009. 200950 En
(41) 22.06.2011. 201125
**(54) Nucleic acids and methods for detecting turfgrass pathogenic fungi**
(71) Omya Development AG, Baslerstrasse 42, 4665 Oftringen, CH
(72) Di Maiuta, Nicola, Amselweg 8, 4528 Zuchwil, CH; Schwarzentruber, Patrick, Regensbergstrasse 2, 8113 Boppelsen, CH
(74) Domenego, Bertrand, et al, Cabinet Lavoix, 2, place d'Estienne d'Orves, 75441 Paris Cedex 09, FR

**(51) (8)** **EP 1913167** *
***C 22C 5/04***
(23) 03.12.2010.
(30) WO 03.08.2005. PCT/EP2005/008419
(86) PCT/EP2005008453 04.08.2005.
(96) EP 05774929.3 04.08.2005. En
(87) WO2007014576 08.02.2007. 200706
(97) EP 1913167 23.04.2008. 200817 En
(41) 25.05.2011. 201121
**(54) PLATINUM ALLOY AND METHOD OF PRODUCTION THEREOF**
(71) Allgemeine Gold- und Silberscheideanstalt AG, Kanzlerstrasse 17, 75175 Pforzheim, DE
(72) TEWS, Peter, Lärchenstrasse 1, 75217 Birkenfeld, DE
(74) Cohausz & Florack, Patent- und Rechtsanwälte, Partnerschaftsgesellschaft, Bleichstraße 14, 40211 Düsseldorf, DE

**(51) (8)** **EP 1896649** *
***D 06M 17/00***
***D 06N 3/06***
***A 61F 13/00***
***A 43B 1/00***
***A 41D 13/00***
***A 41D 19/00***
***A 41D 27/02***
***A 63B 41/08***
(23) 31.12.2010.
(86) PCT/AU2005000929 24.06.2005.
(96) EP 05754333.2 24.06.2005. En
(87) WO2006000044 05.01.2006. 200601
(97) EP 1896649 12.03.2008. 200811 En
(41) 22.06.2011. 201125
**(54) LIQUID IMPERMEABLE MATERIAL**
(71) Margiotta, Ezio, Suite 10, 468 The Kingsway, Miranda, NSW 2228, AU
(72) Margiotta, Ezio, Suite 10, 468 The Kingsway, Miranda, NSW 2228, AU
(74) Donné, Eddy, M.F.J.Bockstael, Arenbergstraat 13, 2000 Anvers, BE

**(51) (8)** **EP 1896669** *
***E 04B 1/26***
***E 04B 1/58***
(23) 03.01.2011.
(30) FR 27.06.2005. 0506486
(86) PCT/FR2006001517 27.06.2006.
(96) EP 06778709.3 27.06.2006. Fr
(87) WO2007000515 04.01.2007. 200701
(97) EP 1896669 12.03.2008. 200811 Fr
(41) 22.06.2011. 201125
**(54) HOLLOW U-SHAPED SECTION AND MODULE FOR THE RAPID ASSEMBLY OF PIECES OF TIMBER, WHICH IS INTENDED, IN PARTICULAR, FOR THE CONSTRUCTION OF BUILDING STRUCTURES OR FRAMES, AND PRODUCTION METHOD THEREOF**
(71) De Gryse, Régis-Henri, 18, allée des Meuniers, 59260 Lezennes, FR
(72) De Gryse, Régis-Henri, 18, allée des Meuniers, 59260 Lezennes, FR

**(51) (8)** **EP 2027350** *
***E 04C 2/52***
***F 24D 3/16***
***F 24D 5/10***
(23) 04.01.2011.
(30) IE 13.06.2006. 20060443
IE 06.03.2007. 20070145
(86) PCT/IE2007000057 12.06.2007.
(96) EP 07736113.7 12.06.2007. En
(87) WO2007144863 21.12.2007. 200751
(97) EP 2027350 25.02.2009. 200909 En
(41) 22.06.2011. 201125
**(54) A COMPOSITE INSULATING PANEL**
(71) Kingspan Research and Developments Limited, Dublin Road, Kingscourt, County Cavan, IE
(72) CAROLAN, James, Drumpeak, Kingscourt, County Cavan, IE;
FLYNN, Gregory, Teach Mhuilinn, Rathdaniel, Collon, County Louth, IE
(74) O'Brien, John Augustine, et al, John A. O'Brien & Associates, Third Floor, Duncairn House, 14 Carysfort Avenue, Blackrock, County Dublin, IE

**(51) (8)** **EP 2017442**
***F 01N 3/20***
***F 01N 11/00***
***B 01D 53/94***
***G 07C 5/00***
***B 60R 16/023***
(23) 07.12.2010.
(30) US 11.06.2007. 761205
(96) EP 08158025.0 11.06.2008. En
(97) EP 2017442 21.01.2009. 200904 En
(41) 25.05.2011. 201121
**(54) Adaptive reductant dosing and emission control strategies**
(71) SOUTHWEST RESEARCH INSTITUTE, 6220 Culebra Road, San Antonio, TX 78238-5166, US
(72) Huang, Yiqun, 3838 Lockhill Selma Road Apt. 833, San Antonio, TX, US
(74) Gregory, John David Charles, Delphi Diesel Systems, Patent Department, Courteney Road, Gillingham, Kent ME8 0RU, GB

**(51) (8)** **EP 2007992** *
***F 16C 11/00***
(23) 04.01.2011.
(30) US 04.04.2006. 788997 P
US 03.04.2007. 696002
(86) PCT/US2007065957 04.04.2007.
(96) EP 07760096.3 04.04.2007. En
(87) WO2007115302 11.10.2007. 200741
(97) EP 2007992 31.12.2008. 200901 En
(41) 22.06.2011. 201125
**(54) COMBINATION CYLINDRICAL AND SPHERICAL JOINT**
(71) Z F Group North American Operations, Inc., 15811 Centennial Drive, Northville, MI 48167, US;
GM Global Technology Operations, Inc., 300 Renaissance Center, Detroit, MI 48265-3000, US
(72) KING, Jeremy, 15811 Centennial Drive, Northville, MI 48167, US;
KRAJEWSKI, Casimir, 1666 Kilburn Road, Rochester Hills, MI 48306, US;
LUTTINEN, James, L., 10867 Arbour Drive, Brighton, MI 48114, US;
FEDULLO, Joseph, S., 29463 South River Road, Harrison Township, MI 48045, US
(74) McWilliams, David John, et al, Withers & Rogers LLP, Goldings House, 2 Hays Lane, London SE1 2HW, GB

**(51) (8)** **EP 2133622**
***F 21S 8/08***
***F 21V 19/00***
***H 05K 1/18***
***F 21Y 101/02***
(23) 25.11.2010.
(96) EP 08158122.5 12.06.2008. En
(97) EP 2133622 16.12.2009. 200951 En
(41) 22.06.2011. 201125
**(54) Street lighting apparatus with multiple LED-light sources**

(71) Schreder, Rue de Lusambo 67, 1190 Bruxelles, BE
(72) Frankinet, Marc, rue Elva, 15, 4460 Horion-Hozemont, BE;
Lang, Vincent, rue P. Vandeput, 10, 4400 Flemalle, BE
(74) Leherte, Georges M.L.M., et al, Gevers, Intellectual Property House, Holidaystraat 5, 1831 Diegem, BE

**(51) (8)** **EP 2156098 ***
***F 23J 1/00***
(23) 08.12.2010.
(30) IT 21.05.2007. RM20070277
(86) PCT/IB2008051789 07.05.2008.
(96) EP 08738097.8 07.05.2008. En
(87) WO2008142594 27.11.2008. 200848
(97) EP 2156098 24.02.2010. 201008 En
(41) 01.06.2011. 201122
**(54) SYSTEM FOR DRY EXTRACTING / COOLING HETEROGENEOUS MATERIAL ASHES WITH CONTROL OF THE AIR INLET IN THE COMBUSTION CHAMBER**
(71) Magaldi Industrie S.R.L., Via Irno, 219/bis, 84135 Salerno, IT
(72) MAGALDI, Mario, Viale del Bosco 22, I-84100 Salerno, IT
(74) Papa, Elisabetta, et al, Società Italiana Brevetti S.p.A, Piazza di Pietra, 38-39, 00186 Roma, IT

**(51) (8)** **EP 1828696 ***
***F 25D 23/10***
***F 25D 23/00***
(23) 24.11.2010.
(30) IT 23.12.2004. PD20040089 U
(86) PCT/EP2005008203 28.07.2005.
(96) EP 05768262.7 28.07.2005. En
(87) WO2006066635 29.06.2006. 200626
(97) EP 1828696 05.09.2007. 200736 En
(41) 22.06.2011. 201125
**(54) TEMPERATURE COOLER FOR RAPID COOLING AND/OR RAPID FREEZING OF PRODUCTS TO BE STORED AT LOW TEMPERATURE FOR DOMESTIC USE**
(71) Irinox S.p.A., Via Madonna di Loreto 6/B, 31010 Corbanese, IT
(72) TONON, Claudio, Via Cal da Poz, 44, I-31029 Vittorio Veneto, IT
(74) Crippa, Paolo Ernesto, et al, Jacobacci & Partners S.p.A., Via Berchet 9, 35131 Padova, IT

**(51) (7)** **EP 1756507 ***
F 28F 19/00
F 28F 13/12
F 16L 45/00
F 16L 55/00
B 08B 1/00
B 08B 9/04
B 08B 7/04
B 08B 9/00
(23) 01.12.2010.
(30) US 03.05.2004. 836220
(86) PCT/IL2005000396 14.04.2005.
(96) EP 05730963.5 14.04.2005. En
(87) WO2005106373 10.11.2005. 200545
(97) EP 1756507 28.02.2007. 200709 En
(41) 29.06.2011. 201126
**(54) BALL TRAP WITH SAFETY-RELEASE GATE**
(71) C.Q.M. LTD., 51 Moshav Tirat Yehuda, 73175 Tiray Yehuda, IL
(72) LIVNI, Omer, Hashahar 33, 45325 Hod Hasharon, IL;
KARIN, Motti, Yeshurun 33, 45200 Hod Hasharon, IL;
LIVNI, Zvi, Harav Amiel 25, 62263 Tel Aviv, IL
(74) Modiano, Micaela Nadia, et al, Modiano Josif Pisanty & Staub Ltd, Thierschstrasse 11, 80538 München, DE

**(51) (7)** **EP 1754035 ***
G 01K 3/04
G 01K 7/00
(23) 01.12.2010.
(30) EP 27.05.2004. 04102365
(86) PCT/IB2005051591 17.05.2005.
(96) EP 05738315.0 17.05.2005. En
(87) WO2005116599 08.12.2005. 200549
(97) EP 1754035 21.02.2007. 200708 En
(41) 08.06.2011. 201123
**(54) RECORDING AND STORING A TEMPERATURE**
(71) NXP B.V., High Tech Campus 60, 5656 AG Eindhoven, NL
(72) HILGERS, Achim, Triester Strasse 64, A-1101 Vienna, AT
(74) Schouten, Marcus Maria, et al, NXP B.V., IP & Licensing Department, High Tech Campus 60, 5656 AG Eindhoven, NL

**(51) (7)** **EP 1761772 ***
G 01N 33/50
(23) 01.12.2010.
(30) EP 28.05.2004. 04102381
(86) PCT/EP2005052381 24.05.2005.
(96) EP 05753975.1 24.05.2005. En
(87) WO2005119250 15.12.2005. 200550
(97) EP 1761772 14.03.2007. 200711 En
(41) 25.05.2011. 201121
**(54) NEW INTRAVENOUS DRUG ADMINISTRATION AND BLOOD SAMPLING MODEL IN THE AWAKE RAT**
(71) Janssen Pharmaceutica NV, Turnhoutseweg 30, 2340 Beerse, BE
(72) MACKIE, Claire Elisabeth, Janssen Pharmaceutica NV, Turnhoutseweg 30, B-2340 Beerse, BE;
HASELDONCKX, Marc J A, Janssen Pharmaceutica N.V., Turnhoutseweg 30, B-2340 Beerse, BE;
BLOKLAND, Saskia Sabine, Janssen Pharmaceutica NV, Turnhoutseweg 30, B-2340 Beerse, BE;
WUYTS, Koen, c/o Janssen Pharmaceutica N.V., Turnhoutseweg 30, B-2340 Beerse, BE;
GYSEMBERG, Petra Carla, Janssen Pharmaceutica N.V., Turnhoutseweg 30, B-2340 Beerse, BE;
VERHOEVEN, Iris J M, c/o Janssen Pharmceutica N.V., Turnhoutseweg 30, B-2340 Beerse, BE;
TIMMERMAN, Philip M M B L, Janssen Pharmaceutica, Turnhoutseweg 30, B-2340 Beerse, BE;
NIJSEN, Maria J M A, Janssen Pharmaceutica N.V., Turnhoutseweg 30, B-2340 Beerse e, BE
(74) Daelemans, Frank F.R., et al, Janssen Pharmaceutica N.V., J&J Patent Law Department, Turnhoutseweg 30, 2340 Beerse, BE

**(51) (8)** **EP 2141498**
***G 01N 33/569***
(23) 14.12.2010.
(96) EP 08450097.4 02.07.2008. En
(97) EP 2141498 06.01.2010. 201001 En
(41) 22.06.2011. 201125
**(54) Cellular COPD diagnosis**
(71) Apoptec AG, Rauhensteingasse 4/3, 1010 Vienna, AT
(72) Ankersmit, Jan Hendrik, Waaggasse 17/19/26, 1040 Vienna, AT
(74) Sonn & Partner Patentanwälte, Riemergasse 14, 1010 Wien, AT

**(51) (8)** **EP 1761786 ***
***G 01R 15/14***
***H 02G 1/02***
(23) 06.06.2011.
(30) US 29.06.2004. 583907 P
(86) PCT/US2005017582 01.05.2005.
(96) EP 05750111.6 01.05.2005. En
(87) WO2006007131 19.01.2006. 200603
(97) EP 1761786 14.03.2007. 200711 En
(41) 13.07.2011. 201128
**(54) ELECTRIC POWER MONITORING AND RESPONSE SYSTEM**
(71) SSI Power LLC, 30 Georgia Avenue, Hampton, GA 30228, US;
Rostron, Joseph R., 148 Darwish Drive, McDonough, GA 30252, US;
Anand, Raj, 202 Montrose Drive, McDonough GA 30253, US;
Keister, Lyle Thomas, 1101 Ridgefield Drive, Bishop, GA 30621, US
(72) ROSTRON, Joseph, R., 148 Darwish Drive, McDonough, GA 30252, US;
ANAND, Raj, 202 Montrose Drive, McDonough, GA 30253, US;
KEISTER, Lyle, Thomas, 1101 Ridgefield Drive, Bishop, GA 30621, US
(74) Gill, David Alan, W.P. Thompson & Co., 55 Drury Lane, London WC2B 5SQ, GB

**(51) (8)** **EP 1899736 ***
***G 01R 21/133***
***G 06Q 30/00***
(23) 31.12.2010.
(30) US 20.06.2005. 157097
(86) PCT/US2006023559 16.06.2006.
(96) EP 06773392.3 16.06.2006. En
(87) WO2007001917 04.01.2007. 200701
(97) EP 1899736 19.03.2008. 200812 En
(41) 22.06.2011. 201125
**(54) SYSTEMS AND METHODS FOR UTILITY METER DEMAND DATA COLLECTION**
(71) Cellnet Innovations, Inc., 30000 Mill Creek Avenue, Suite 100-Patents, 100 Milton Park, Alpharetta, Georgia 30022, US
(72) GUPTA, Ravi, 6108 Jameson Pass, Alpharetta, Georgia 30022, US
(74) Thompson, Andrew John, et al, Withers & Rogers LLP, Goldings House, 2 Hays Lane, London, SE1 2HW, GB

**(51) (8)** **EP 2010952 ***
***G 02B 6/44***
(23) 19.01.2011.
(30) US 26.04.2006. 411242
(86) PCT/US2007067539 26.04.2007.
(96) EP 07761371.9 26.04.2007. En
(87) WO2007127863 08.11.2007. 200745
(97) EP 2010952 07.01.2009. 200902 En
(41) 13.07.2011. 201128
**(54) ALUMINUM ALLOYS FOR ARMORED CABLES**
(71) Alcoa Packaging Products LLC, 6603 West Broad Street, Richmond, VA 23230, US
(72) CRAIG, Cheryl L., 283 Henry Smith Road, Simpsonville, Kentucky 40067, US;
HOLLINSHEAD, Phillip, A., 109 Harvest Lane, Harrison City, Pennsylvania 15636, US;
PERELMAN, Alexander, D., 11301 Crown Grant Court, Richmond, Virginia 23233, US;
MARTIN, Oscar, L., Jr., 2212 Water Horse Court, Midlothian, Virginia 23112, US
(74) Blodig, Wolfgang, et al, Wächtershäuser & Hartz, Weinstrasse 8, 80333 München, DE

**(51) (8)** **EP 1843204**
***G 03F 7/20***
***H 01L 21/027***
(23) 13.04.2011.
(30) JP 25.01.2005. 2005016843
JP 18.02.2005. 2005043103
JP 17.08.2005. 2005236940
(86) PCT/JP2006301001 24.01.2006.
(96) EP 06712217.6 24.01.2006. Ja
(87) WO2006080285 03.08.2006. 200631
(97) EP 1843204 10.10.2007. 200741 En
(41) 25.05.2011. 201121
**(54) EXPOSURE DEVICE, EXPOSURE METHOD, AND MICRO DEVICE MANUFACTURING METHOD**
(71) NIKON CORPORATION, 12-1, Yurakucho 1-chome, Chiyoda-ku, Tokyo 100-8331, JP
(72) KATO, Masaki, c/o NIKON CORPORATION IP Dept., 2-3 Marunouchi 3-chome, Chiyoda-ku, Tokyo 1008331, JP;
SHIMIZU, Kenji, c/o NIKON CORPORATION IP Dept., 2-3 Marunouchi 3-chome, Chiyoda-ku, Tokyo 1008331, JP;
TOGUCHI, Manabu, c/o NIKON CORPORATION IP Dept., 2-3 Marunouchi 3-chome, Chiyoda-ku, Tokyo 1008331, JP;
WATANABE, Tomoyuki, c/o NIKON CORPORATION IP Dept., 2-3 Marunouchi 3-chome, Chiyoda-ku, Tokyo 1008331, JP
(74) HOFFMANN EITLE, Patent- und Rechtsanwälte, Arabellastraße 4, 81925 München, DE

**(51) (8)** **EP 1865381**
***G 03F 7/20***
***H 01L 21/027***
(23) 29.12.2010.
(30) JP 29.03.2005. 2005095225
(86) PCT/JP2006306232 28.03.2006.
(96) EP 06730180.4 28.03.2006. Ja
(87) WO2006104127 05.10.2006. 200640
(97) EP 1865381 12.12.2007. 200750 En
(41) 29.06.2011. 201126
**(54) EXPOSURE APPARATUS, METHOD FOR MANUFACTURING EXPOSURE APPARATUS, AND METHOD FOR MANUFACTURING MICRODEVICE**
(71) NIKON CORPORATION, 12-1, Yurakucho 1-chome, Chiyoda-ku, Tokyo 100-8331, JP

(72) KAWAMURA, Shuji, c/o NIKON CORPORATION, Intellectual Prop. Dept., 2-3 Marunouchi 3-chome, Chiyoda-ku, Tokyo, 1008331, JP
(74) HOFFMANN EITLE, Patent- und Rechtsanwälte, Arabellastraße 4, 81925 München, DE

**(51) (8)** **EP 2259167**
***G 06F 3/023***
***G 06F 3/048***
(23) 07.12.2010.
(96) EP 09162006.2 05.06.2009. En
(97) EP 2259167 08.12.2010. 201049 En
(41) 15.06.2011. 201124
**(54) System and method for applying a text prediction algorithm to a virtual keyboard**
(71) RESEARCH IN MOTION LIMITED, 295 Phillip Street, Waterloo, Ontario N2L 3W8, CA
(72) Ho, Colin, Stephen, Samuel, 12207 - 450 March Road, Kanata Ontario K2K 3K2, CA;
Rider, Douglas, 12802 - 4000 Innovation Drive, Kanata Ontario K2K 3K1, CA
(74) MERH-IP, Matias Erny Reichl Hoffmann, Paul-Heyse-Strasse 29, 80336 München, DE

**(51) (8)** **EP 1818773**
***G 06F 3/033***
(23) 06.12.2010.
(30) US 13.02.2006. 773145 P
US 14.02.2006. 773798 P
US 14.02.2006. 773799 P
US 14.02.2006. 773800 P
(96) EP 06253056.3 13.06.2006. En
(97) EP 1818773 15.08.2007. 200733 En
(41) 08.06.2011. 201123
**(54) Lockable keyboard for a handheld communication device**
(71) RESEARCH IN MOTION LIMITED, 295 Phillip Street, Waterloo, Ontario N2L 3W8, CA
(72) Fyke, Steven, 55 Blue Springs DR., Unit 201, Waterloo, ON N2J 4T3, CA;
Griffin, Jason T., 14 Deer Ridge Crescent, Kitchener, ON N2P 2L3, CA;
Bocking, Andrew, 547 Mariner Drive, Waterloo, ON N2K 3Y8, CA;
Lee, Matthew, 72 Casey Road, R.R. 6, Belleville, ON K8N 4Z6, CA
(74) Hibbert, Juliet Jane Grace, et al, Kilburn & Strode LLP, 20 Red Lion Street, London WC1R 4PJ, GB

**(51) (8)** **EP 1818774**
***G 06F 3/033***
(23) 06.12.2010.
(30) US 13.02.2006. 773145 P
US 14.02.2006. 773798 P
US 14.02.2006. 773799 P
US 14.02.2006. 773800 P
(96) EP 06253057.1 13.06.2006. En
(97) EP 1818774 15.08.2007. 200733 En
(41) 08.06.2011. 201123
**(54) Lockable keyboard for a handheld communication device having a full alphabetic keyboard**
(71) RESEARCH IN MOTION LIMITED, 295 Phillip Street, Waterloo, Ontario N2L 3W8, CA
(72) Fyke, Steven, 3 Father David Bauer Drive, Unit 401, Waterloo, Ontario, N2L 6M1, CA;
Griffin, Jason T., Deer Ridge Crescent, Kitchener, ON N2P 2L3, CA;
Bocking, Andrew, 547 Mariner Drive, Waterloo, ON N2K 3Y8, CA;
Lee, Matthew, 72 Casey Road, R.R. 6, Belleville, ON K8N 4Z6, CA
(74) Hibbert, Juliet Jane Grace, et al, Kilburn & Strode LLP, 20 Red Lion Street, London WC1R 4PJ, GB

**(51) (8)** **EP 1818775**
***G 06F 3/033***
(23) 06.12.2010.
(30) US 13.02.2006. 773145 P
US 14.02.2006. 773798 P
US 14.02.2006. 773799 P
US 14.02.2006. 773800 P
(96) EP 06253060.5 13.06.2006. En
(97) EP 1818775 15.08.2007. 200733 En
(41) 08.06.2011. 201123
**(54) Lockable keyboard for a wireless handheld communication device**
(71) RESEARCH IN MOTION LIMITED, 295 Phillip Street, Waterloo, Ontario N2L 3W8, CA
(72) Fyke, Steven, 55 Blue Springs DR., Unit 201, Waterloo, ON N2J 4T3, CA;
Griffin, Jason T., 14 Deer Ridge Crescent, Kitchener, ON N2P 2L3, CA;
Bocking, Andrew, 547 Mariner Drive, Waterloo, ON N2K 3Y8, CA;
Lee, Matthew, 72 Casey Road, R.R. 6, Belleville, ON K8N 4Z6, CA
(74) Hibbert, Juliet Jane Grace, et al, Kilburn & Strode LLP, 20 Red Lion Street, London WC1R 4PJ, GB

**(51) (8)** **EP 1818776**
***G 06F 3/033***
(23) 06.12.2010.
(30) US 13.02.2006. 773145 P
US 14.02.2006. 773798 P
US 14.02.2006. 773799 P
US 14.02.2006. 773800
(96) EP 06253062.1 13.06.2006. En
(97) EP 1818776 15.08.2007. 200733 En
(41) 08.06.2011. 201123
**(54) Lockable keyboard for a handheld communication device having a reduced alphabetic keyboard**
(71) RESEARCH IN MOTION LIMITED, 295 Phillip Street, Waterloo, Ontario N2L 3W8, CA
(72) Fyke ,Steven, 55 Blue Springs DR. Unit 201, Waterloo ,ON, N2J 4T3, CA;
Griffin, Jason T., 14 Deer Ridge Crescent, Kitchener, ON N2P 2L3, CA;
Bocking, Andrew, 547 Mariner Drive, Waterloo, ON N2K 3Y8, CA;
Lee, Matthew, 72 Casey Road, R.R No. 6, Belleville, ON, K8N 4Z6, CA
(74) Hale, Peter, et al, Kilburn & Strode LLP, 20 Red Lion Street, London WC1R 4PJ, GB

**(51) (7)** **EP 1716478 ***
G 06F 3/06
(23) 11.01.2011.
(30) US 05.02.2004. 772822
(86) PCT/US2005003217 03.02.2005.
(96) EP 05712601.3 03.02.2005. En
(87) WO2005078567 25.08.2005. 200534
(97) EP 1716478 02.11.2006. 200644 En
(41) 29.06.2011. 201126
**(54) SYSTEM AND METHOD FOR LUN CLONING**
(71) Network Appliance, Inc., 495 East Java Drive, Sunnyvale, CA 94089, US
(72) RAJAN, Vijayan, 250 Thompson Avenue, Mountain View, California 94043, US;
GUPTA, Vinay, 495 East Java Drive, Sunnyvale, CA 94089, US
(74) Rupprecht, Kay, et al, Meissner, Bolte & Partner GbR, Widenmayerstraße 48, 80538 München, DE

**(51) (7)** **EP 1723505 ***
G 06F 3/14
G 06F 17/30
(23) 20.10.2010.
(30) US 11.03.2004. 551830 P
(86) PCT/CA2005000373 11.03.2005.
(96) EP 05714613.6 11.03.2005. En
(87) WO2005088437 22.09.2005. 200538
(97) EP 1723505 22.11.2006. 200647 En
(41) 15.06.2011. 201124
**(54) RESTRICTED USER INTERFACE NAVIGATION**
(71) RESEARCH IN MOTION LIMITED, 295 Phillip Street, Waterloo, Ontario N2L 3W8, CA
(72) JOHNSON, Eric, 3860 Autumnwood St., Ottawa, Ontario, K1T 1C1, CA;
DICKE, Ronald, Anthony, 107 Smirle Ave., Ottawa, Ontario, K1Y 0S4, CA
(74) MERH-IP, Matias Erny Reichl Hoffmann, Paul-Heyse-Strasse 29, 80336 München, DE

**(51) (8)** **EP 1872205 ***
***G 06F 9/44***
***G 06F 17/30***
***H 03M 7/30***
(23) 18.01.2011.
(30) US 18.04.2005. 672085 P
(86) PCT/CA2006000260 22.02.2006.
(96) EP 06705215.9 22.02.2006. En
(87) WO2006110987 26.10.2006. 200643
(97) EP 1872205 02.01.2008. 200801 En
(41) 08.06.2011. 201123
**(54) SYSTEM AND METHOD FOR EFFICIENT HOSTING OF WIRELESS APPLICATIONS BY ENCODING APPLICATION COMPONENT DEFINITIONS**
(71) RESEARCH IN MOTION LIMITED, 295 Phillip Street, Waterloo, Ontario N2L 3W8, CA
(72) BLAGOJEVIC, Vladimir, Flat 71, 384 Deansgate, Manchester, Greater Manchester M34LA, GB;
VITANOV, Kamen, 5530 Glen Erin Drive, Unit 30, Mississauga, Ontario L5M 6E8, CA;
DOKTOROVA, Laura, 2285 Bankside Drive, Mississauga, Ontario L5M 6E1, CA
(74) Patel, Binesh, Barker Brettell LLP, 100 Hagley Road, Edgbaston, Birmingham, B16 8QQ, GB

**(51) (8)** **EP 2140349 ***
***G 06F 9/445***
(23) 20.01.2011.
(30) US 27.03.2007. 691944
(86) PCT/IB2008051024 18.03.2008.
(96) EP 08719754.7 18.03.2008. En
(87) WO2008117205 02.10.2008. 200840
(97) EP 2140349 06.01.2010. 201001 En
(41) 15.06.2011. 201124
**(54) UPGRADING SERVICES ASSOCIATED WITH HIGH AVAILABILITY SYSTEMS**
(71) Telefonaktiebolaget LM Ericsson (publ), 164 83 Stockholm, SE
(72) TOEROE, Maria, 1803-1212 Ave. des Pins O., Montreal, Québec H3G 1A9, CA
(74) Tonscheidt, Andreas, et al, Ericsson GmbH, Ericsson Allee 1, 52134 Herzogenrath, DE

**(51) (8)** **EP 1712994**
***G 06F 9/46***
***G 06F 9/44***
***G 06F 9/45***
(23) 09.05.2011.
(96) EP 05103038.5 15.04.2005. En
(97) EP 1712994 18.10.2006. 200642 En
(41) 15.06.2011. 201124
**(54) System and method for transformation of an application definition**
(71) RESEARCH IN MOTION LIMITED, 295 Phillip Street, Waterloo, Ontario N2L 3W8, CA
(72) DeBruin, David, 40 Elginfield Drive, Guelph, Ontario N1E 4E7, CA;
Wetherly, Curtis, 2309 Mowat Avenue, Oakville, Ontario L6H 5G4, CA;
Goring, Bryan R., 1542 Morse Place, Milton, Ontario L9T 5V4, CA
(74) MERH-IP, Matias Erny Reichl Hoffmann, Paul-Heyse-Strasse 29, 80336 München, DE

**(51) (7)** **EP 1711897 ***
G 06F 12/14
G 06F 11/36
G 06F 1/00
(23) 16.12.2010.
(30) US 05.02.2004. 542173 P
(86) PCT/CA2005000136 04.02.2005.
(96) EP 05714419.8 04.02.2005. En
(87) WO2005076139 18.08.2005. 200533
(97) EP 1711897 18.10.2006. 200642 En
(41) 01.06.2011. 201122
**(54) DEBUGGING PORT SECURITY INTERFACE**
(71) RESEARCH IN MOTION LIMITED, 295 Phillip Street, Waterloo, Ontario N2L 3W8, CA
(72) LITTLE, Herbert, A., 504 Old Oak Place, Waterloo, Ontario N2T 2V8, CA;
RANDELL, Jerrold, R., 534 Sandbanks Cres., Waterloo, Ontario N2V 2K2, CA;
MADTER, Richard, C., R.R. 1, Puslinch, Ontario N0B 2J0, CA;

HICKEY, Ryan, J., 5 Father David Bauer Drive, Unit 202, Waterloo, Ontario N2L 6M2, CA
(74) Rickard, David John, et al, Ipulse, 26 Mallinson Road, London, SW11 1BP, GB

**(51) (8)** **EP 2054810** *
***G 06F 13/42***
(23) 10.11.2010.
(30) US 18.08.2006. 838747 P
(86) PCT/IB2007004561 01.08.2007.
(96) EP 07874526.2 01.08.2007. En
(87) WO2008129354 30.10.2008. 200844
(97) EP 2054810 06.05.2009. 200919 En
(41) 25.05.2011. 201121
**(54) MAC AND PHY INTERFACE ARRANGEMENT**
(71) NXP B.V., High Tech Campus 60, 5656 AG Eindhoven, NL
(72) MURARI, Sharad, 2022 North Nevada Street, Apt. 1060, Chandler, AZ 85225, US
(74) Schouten, Marcus Maria, et al, NXP B.V., IP & Licensing Department, High Tech Campus 60, 5656 AG Eindhoven, NL

**(51) (8)** **EP 2165271** *
***G 06F 17/27***
***G 06F 19/00***
***G 06T 13/00***
***G 06T 15/70***
(23) 03.01.2011.
(30) US 06.06.2007. 924945 P
(86) PCT/CA2008001088 06.06.2008.
(96) EP 08757220.2 06.06.2008. En
(87) WO2008148211 11.12.2008. 200850
(97) EP 2165271 24.03.2010. 201012 En
(41) 22.06.2011. 201125
**(54) TIME-ORDERED TEMPLATES FOR TEXT-TO-ANIMATION SYSTEM**
(71) Xtranormal Technologie Inc., 2e étage, 5555 Avenue Casgrain, Montreal, QC H2T 1Y1, CA
(72) BHERER, Hans, 630 William, apt. 928, Montreal, Quebec H3C 4C9, CA
(74) Savic, Bojan, Savic Patentanwälte, Bayerstrasse 83, 80335 München, DE

**(51) (8)** **EP 1657655**
***G 06F 17/30***
(23) 01.12.2010.
(30) US 12.11.2004. 626958 P
(96) EP 05024633.9 11.11.2005. En
(97) EP 1657655 17.05.2006. 200620 En
(41) 25.05.2011. 201121
**(54) Method, system and computer program product for reference categorization and/or reference particulars mining**
(71) Trialstat Corporation, 44 Byward Market Square, Suite 270, Ottawa ON K1N 7A2, CA
(72) O'Blenis, Peter Andrew, 5584 Whitewood Avenue, Manotick, Ontario, K1N 7A2, CA
(74) Caspary, Karsten, et al, Kroher-Strobel, Rechts- und Patentanwälte, Bavariaring 20, 80336 München, DE

**(51) (7)** **EP 1763800** *
G 06F 17/30
(23) 01.12.2010.
(30) US 28.05.2004. 855572
(86) PCT/US2005019064 31.05.2005.
(96) EP 05754669.9 31.05.2005. En
(87) WO2005119518 15.12.2005. 200550
(97) EP 1763800 21.03.2007. 200712 En
(41) 01.06.2011. 201122
**(54) DEFINING A DATA DEPENDENCY PATH THROUGH A BODY OF RELATED DATA**
(71) Metadata LLC, 5409 Maryland Way, Suite 215, Brentwood TN 37027, US
(72) MYERS, Jack, E., 40 S. Chestnut Pl., 5207, Long Beach, CA 90802, US;
RAVENELLE, Rodney, T., 33595 Cirular Corona, Dana Point, CA 92629, US;
PEACOCK, Stephen, W., 502 Story Place, Alhambra, CA 91801, US
(74) Bosch, Matthias, et al, Bosch Jehle, Patentanwaltsgesellschaft mbH, Flüggenstrasse 13, 80639 München, DE

**(51) (8)** **EP 1839211** *
***G 06F 17/30***
(23) 20.01.2011.
(30) US 30.12.2004. 24765
(86) PCT/US2005047391 30.12.2005.
(96) EP 05855882.6 30.12.2005. En
(87) WO2006074052 13.07.2006. 200628
(97) EP 1839211 03.10.2007. 200740 En
(41) 29.06.2011. 201126
**(54) LOCAL ITEM EXTRACTION**
(71) Google Inc., 1600 Amphitheatre Parkway, Building 41, Mountain View, CA 94043, US
(72) RILEY, Michael Dennis, 450 Avenue Of The Americas, 2G, New York, New York 10011, US
(74) Betten & Resch, Patentanwälte, Theatinerstrasse 8, 80333 München, DE

**(51) (7)** **EP 1738253** *
G 06F 19/00
C 12N 5/06
(23) 12.01.2011.
(30) US 26.03.2004. 556683 P
(86) PCT/US2005009366 22.03.2005.
(96) EP 05725995.4 22.03.2005. En
(87) WO2005097190 20.10.2005. 200542
(97) EP 1738253 03.01.2007. 200701 En
(41) 13.07.2011. 201128
**(54) SYSTEMS AND METHODS FOR PROVIDING A STEM CELL BANK**
(71) CELGENE CORPORATION, 86 Morris Avenue, Summit, NJ 07901, US
(72) KAMINSKI, Joseph, K., 22 Ramesy Road, Lebanon, NJ 08833, US;
DEIBERT, Mark, H, 19 Garvey Drive, Monroe Township, NJ 08831, US;
GOODMAN, Chris, B., 24 Swanson Lane, Green Brook, NJ 08812, US;
FEINGOLD, Barnett, 165 East 32nd Street 19B, New York, NJ 10016, US
(74) Jones Day, Rechtsanwälte, Attorneys-at-Law, Patentanwälte, Prinzregentenstrasse 11, 80538 München, DE

**(51) (8)** **EP 2162843** *
***G 06F 19/00***
(23) 04.01.2011.
(30) EP 07.06.2007. 07011207
US 07.06.2007. 942548 P
(86) PCT/EP2008057160 09.06.2008.
(96) EP 08760725.5 09.06.2008. En
(87) WO2008148894 11.12.2008. 200850
(97) EP 2162843 17.03.2010. 201011 En
(41) 22.06.2011. 201125
**(54) SYSTEM AND A METHOD FOR GENERATING A QUANTITATIVE MEASURE REFLECTING THE SEVERITY OF A MEDICAL CONDITION**
(71) Mentis Cura ehf., Grandagarður 7, 101 Reykjavik, IS
(72) JOHNSEN, Kristinn, Sudurgata 29, IS-101 Reykjavik, IS;
GUDMUNDSSON, Steinn, Kristinibraut 77, IS-113 Reykjavik, IS
(74) Plougmann & Vingtoft A/S, Sundkrogsgade 9, P.O. Box 831, 2100 CopenhagenØ, DK

**(51) (8)** **EP 1852801**
***G 06F 21/20***
(23) 06.06.2011.
(30) EP 04.05.2006. 06113481
(96) EP 06115690.7 19.06.2006. En
(97) EP 1852801 07.11.2007. 200745 En
(41) 13.07.2011. 201128
**(54) Updating certificate status in a system and method for processing certificates located in a certificate search**
(71) RESEARCH IN MOTION LIMITED, 295 Phillip Street, Waterloo, Ontario N2L 3W8, CA
(72) Adams, Neil, 550 Little Dover Crescent, Waterloo, Ontario, N2K 4E4, CA;
Little, Herb, 504 Old Oak Place, Waterloo, Ontario, N2T 2V8, CA;
Brown, Michael K, 8 Fernwood Place, Kitchener, Ontario, N2M 2Z2, CA;
Brown, Michael S, 350 University Downs Crescent, Waterloo, Ontario, N2K 4B1, CA;
Kirkup, Michael G., 224 Dearborn Boulevard, Waterloo, Ontario, N2J 4Y3, CA
(74) Rickard, David John, et al, Ipulse, 26 Mallinson Road, London, SW11 1BP, GB

**(51) (8)** **EP 1930835**
***G 06F 21/20***
(23) 01.02.2011.
(96) EP 06125692.1 08.12.2006. En
(97) EP 1930835 11.06.2008. 200824 En
(41) 13.07.2011. 201128
**(54) System and method for locking and unlocking access to an electronic device**
(71) RESEARCH IN MOTION LIMITED, 295 Phillip Street, Waterloo, Ontario N2L 3W8, CA
(72) Orr, Kevin, 56 Snyder Avenue North, Elmira, Ontario N3B 3C9, CA
(74) Moore, Barry, et al, Hanna Moore & Curley, 13 Lower Lad Lane, Dublin 2, IE

**(51) (8)** **EP 1889205** *
***G 06K 9/00***
(23) 01.12.2010.
(30) US 31.05.2005. 139986
(86) PCT/US2006021320 31.05.2006.
(96) EP 06849790.8 31.05.2006. En
(87) WO2007086926 02.08.2007. 200731
(97) EP 1889205 20.02.2008. 200808 En
(41) 15.06.2011. 201124
**(54) HUMAN DETECTION AND TRACKING FOR SECURITY APPLICATIONS**
(71) Objectvideo, Inc., 11600 Sunrise Valley Drive, Suite 290, Reston, VA 20191, US
(72) ZHANG, Zhong, 1122 Clinch Road, Herndon, Virginia 20170, US;
LIPTON, Alan J., 12633 Terrymill Drive, Herndon, Virginia 20170, US;
BREWER, Paul C., 2724 North Jefferson Street, Arlington, Virginia 22207, US;
CHOSAK, Andrew J., 1423 North Nash Street, Apt. 7, Arlington, Virginia 22209, US;
HAERING, Niels, 2041 Chadds Ford Drive, Reston, Virginia 20191, US;
MYERS, Gary W., 21407 Woodspice Court, Ashburn, Virginia 20148, US;
VENETIANER, Peter L., 6623 Ivy Hill Drive, McLean, Virginia 22101, US;
YIN, Weihong, 1122 Clinch Road, Herndon, Virginia 20170, US
(74) Waddington, Richard, Appleyard Lees, 15 Clare Road, Halifax HX1 2HY, GB

**(51) (8)** **EP 2169600**
***G 06Q 10/00***
(23) 14.02.2011.
(96) EP 08164766.1 22.09.2008. En
(97) EP 2169600 31.03.2010. 201013 En
(41) 22.06.2011. 201125
**(54) Method and apparatus for controlling an electronic device**
(71) RESEARCH IN MOTION LIMITED, 295 Phillip Street, Waterloo, Ontario N2L 3W8, CA
(72) Bells, Matthew, 5 Father David Bauer Drive, suite 409, Waterloo Ontario N2L 6M2, CA;
Jain, Rohit Rocky, 514 Mountbatten Avenue, Waterloo Ontario N2T 2T8, CA
(74) MERH-IP, Matias Erny Reichl Hoffmann, Paul-Heyse-Strasse 29, 80336 München, DE

**(51) (8)** **EP 2199957**
***G 06Q 10/00***
(23) 03.03.2011.
(96) EP 08172662.2 22.12.2008. En
(97) EP 2199957 23.06.2010. 201025 En
(41) 13.07.2011. 201128
**(54) Method and system for coordinating data records across a plurality of computing devices**
(71) RESEARCH IN MOTION LIMITED, 295 Phillip Street, Waterloo, Ontario N2L 3W8, CA
(72) Brown, Michael S, c/o Research In Motion Limited, 175 Columbia St. W., Waterloo Ontario N2L 5Z5, CA;
Adams, Neil P., 72662 - 175 Columbia St. W., Waterloo Ontario N2L 5Z5, CA
(74) MERH-IP, Matias Erny Reichl Hoffmann, Paul-Heyse-Strasse 29, 80336 München, DE

**(51) (8)** **EP 2218041** *
***G 06Q 10/00***
(23) 28.02.2011.
(30) DE 03.11.2007. 202007015297 U
(86) PCT/DE2008001631 02.10.2008.
(96) EP 08843528.4 02.10.2008. De
(87) WO2009056090 07.05.2009. 200919
(97) EP 2218041 18.08.2010. 201033 De
(41) 06.07.2011. 201127
**(54) SYSTEM FOR THE VISUAL DISPLAY OF CLEAVING PROCESS DATA IN MEAT PROCESSING**
(71) CSB-System AG, An Fürthenrode, 52511 Geilenkirchen, DE
(72) SCHIMITZEK, Peter, Tizianstrasse 4, 52511 Geilenkirchen, DE
(74) Weihrauch, Frank, et al, Dr. Weihrauch & Haussingen, Patent- und Rechtsanwälte, Neundorfer Strasse 2, 98527 Suhl, DE

**(51) (8)** **EP 2171665** *
***G 06Q 30/00***
(23) 11.01.2011.
(30) US 20.06.2007. 929270 P
(86) PCT/IL2008000844 22.06.2008.
(96) EP 08763602.3 22.06.2008. En
(87) WO2008155774 24.12.2008. 200852
(97) EP 2171665 07.04.2010. 201014 En
(41) 06.07.2011. 201127
**(54) A METHOD AND SYSTEM OF PROCESSING TELEPHONE CALLS INVOLVING TARGETED COMMERCIALS**
(71) Jajah, Inc., 2513 Charleston Road, Suite 102, Mountain View, CA 94043, US
(72) MATTES, Daniel, 5 Ginzkey Street, A-4600 Wels, AT; SCHARF, Roman, 40 Hoffeld Street, A-2522 Oberwaltersdorf, AT
(74) Keltie, David Arthur, et al, Keltie LLP, Fleet Place House, 2 Fleet Place, London EC4M 7ET, GB

**(51) (8)** **EP 2179401** *
***G 06T 13/00***
***G 06F 17/10***
***G 06T 15/70***
(23) 04.01.2011.
(30) US 12.07.2007. 929780 P
(86) PCT/CA2008001205 27.06.2008.
(96) EP 08772858.0 27.06.2008. En
(87) WO2009006727 15.01.2009. 200903
(97) EP 2179401 28.04.2010. 201017 En
(41) 22.06.2011. 201125
**(54) MODELING THE MOTION OF AN ARTICULATED OBJECT**
(71) Xtranormal Technologie Inc., 2e étage, 5555 Avenue Casgrain, Montreal, QC H2T 1Y1, CA
(72) GAUDIN, Thibaut, Les Valottes, F-71390 Chenoves, FR
(74) Savic, Bojan, Savic Patentanwälte, Bayerstrasse 83, 80335 München, DE

**(51) (8)** **EP 1917647** *
***G 07C 9/00***
***E 05F 15/00***
(23) 13.04.2011.
(30) US 24.08.2005. 211297
US 08.12.2005. 296849
(86) PCT/US2006014176 13.04.2006.
(96) EP 06750261.7 13.04.2006. En
(87) WO2007024283 01.03.2007. 200709
(97) EP 1917647 07.05.2008. 200819 En
(41) 08.06.2011. 201123
**(54) SYSTEM AND METHODS FOR AUTOMATICALLY MOVING ACCESS BARRIERS INITIATED BY MOBILE TRANSMITTER DEVICES**
(71) WAYNE-DALTON CORP., One Door Drive, P.O. Box 67, Mt. Hope, OH 44660, US
(72) MULLET, Willis, J., 513 Deer Point Drive, Gulf Breeze, Florida 32561, US;
MAMALOUKAS, Jason, L., P.O. Box 22326, Beachwood, Ohio 44122, US;
MURRAY, James, S., 1254 Chappel Court Apt.104, Glendale Heights, IL 60139, US
(74) Dawson, Elizabeth Ann, et al, Ipulse, 26 Mallinson Road, London, SW11 1BP, GB

**(51) (8)** **EP 2137706** *
***G 07C 9/00***
(23) 01.10.2010.
(30) IT 06.04.2007. AQ20070006
(86) PCT/IT2008000205 28.03.2008.
(96) EP 08751526.8 28.03.2008. En
(87) WO2008123002 16.10.2008. 200842
(97) EP 2137706 30.12.2009. 200953 En
(41) 15.06.2011. 201124
**(54) UNIVERSAL KEY AND MECCHANICAL-ELECTRONIC LOCK WITH STANDARDISABLE COMPONENTS**
(71) Cocuzzi, Cesidio, Via Svizzera n. 13, Frazione Pettino, 67100 L'Aquila, IT
(72) Cocuzzi, Cesidio, Via Svizzera n. 13, Frazione Pettino, 67100 L'Aquila, IT

**(51) (8)** **EP 2193508** *
***G 07F 11/36***
(23) 11.01.2011.
(30) HU 11.07.2007. 0700117 U
(86) PCT/HU2008000085 10.07.2008.
(96) EP 08776251.4 10.07.2008. En
(87) WO2009007766 15.01.2009. 200903
(97) EP 2193508 09.06.2010. 201023 En
(41) 29.06.2011. 201126
**(54) VENDING MACHINE FOR MEDICINES**
(71) B4 Group Ingatlanhasznosító Kft., Fogarasi út. 51, 1140 Budapest, HU;
Farkas, Gábor, Deák Ferenc U. 9, 2021 Tahitótfalu, HU;
Németh, Rudolf, Jablonka U. 30, 1037 Budapest, HU;
Kiss, Anna, Álmos herceg útja 8, 2027 Dömös, HU
(72) FARKAS, Gábor, Deák Ferenc U. 9, H-2021 Tahitótfalu, HU;
NÉMETH, Rudolf, Jablonka U. 30, H-1037 Budapest, HU;
KISS, Anna, Álmos herceg útja 8, H-2027 Dömös, HU;
MAYER, Richárd, Széchenyl út 5, H-2025 Visegrad, HU;
MARINOV, Helga, Széchenyi tér 32, H-2000 Szentendre, HU;
NAGY, Balázs, Lázás Vilmos u. 12/10, H-2220 Vecsés, HU;
FÖLDES, László, Attila út. 144/B, H-1047 Budapest, HU
(74) Jakabné Molnar, Judit, S.B.G. & K. Patent and Law Offices, Andrassy ut 113., 1062 Budapest, HU

**(51) (7)** **EP 1763854 ***
G 07F 17/32
G 07G 1/00
(23) 01.12.2010.
(30) HU 03.05.2004. 0400907
HU 18.12.2004. 0402637
(86) PCT/HU2005000045 03.05.2005.
(96) EP 05742533.2 03.05.2005. En
(87) WO2005106811 10.11.2005. 200545
(97) EP 1763854 21.03.2007. 200712 En
(41) 25.05.2011. 201121
**(54) APPARATUS FOR DECREASING THE CIRCULATION OF MONEY OF SMALL DENOMINATIONS, ARRANGEMENT AND METHOD FOR DRAWING LOTS**
(71) Pajor, Tamás, Kárpát u. 18, 1029 Budapest, HU
(72) PAJOR, Tamás, Kárpát u. 18., H-1029 Budapest, HU; KASSAI, Robert, Istenhegyi út 82/B, H-1125 Budapest, HU; KOVÁCS, Gábor, Egressy út 194, H-1141 Budapest, HU; SUGÁR, András, Pecz Samu u. 2/B, H-1148 Budapest, HU
(74) Kovacs, Gabor, Danubia, Patent & Law Office LLC, Bajcsy-Zsilinszky út 16, 1051 Budapest, HU

**(51) (8)** **EP 1739644**
***G 09F 13/34***
(23) 20.04.2011.
(30) ES 29.07.2005. 200501883
ES 30.06.2005. 200501492 U
(96) EP 06116216.0 28.06.2006. Es
(97) EP 1739644 03.01.2007. 200701 En
(41) 25.05.2011. 201121
**(54) Advertising display panel with image updating and improvements for said display panel.**
(71) Codice Exterior Gestion De Soportes S.L., Poligono Industrial Guadalhorce. C/, Estonia, Nave 92., 29004 Malaga, ES
(72) Fernandez Conesa, Rafael Luis, Poigono Industrial Guadalhorche, C/Estonia nave 92, 29004, MALAGA, ES
(74) Pons Ariño, Angel, Pons Patentes y Marcas Internacional, S.L., Glorieta Ruben Dario 4, 28010 Madrid, ES

**(51) (8)** **EP 2038892 ***
***G 11C 16/06***
***G 11C 16/26***
(23) 04.01.2011.
(30) EP 30.06.2006. 06116478
(86) PCT/IB2007052350 19.06.2007.
(96) EP 07789730.4 19.06.2007. En
(87) WO2008004149 10.01.2008. 200802
(97) EP 2038892 25.03.2009. 200913 En
(41) 22.06.2011. 201125
**(54) FLASH MEMORY DEVICE HAVING A FLASH CACHE PORTION AND A METHOD FOR USING THE SAME**
(71) NXP B.V., High Tech Campus 60, 5656 AG Eindhoven, NL
(72) VAN CAUWENBERGH, Geert, R., J., c/o NXP Semiconductors, IP Department, HTC 60 1.31 Prof Holstlaan 4, NL-5656 AG Eindhoven, NL
(74) Schouten, Marcus Maria, et al, NXP B.V., IP & Licensing Department, High Tech Campus 60, 5656 AG Eindhoven, NL

**(51) (8)** **EP 2044619 ***
***H 01L 21/28***
***H 01L 21/8247***
***H 01L 27/115***
***H 01L 29/423***
(23) 04.01.2011.
(30) EP 13.06.2006. 06115400
(86) PCT/IB2007052128 06.06.2007.
(96) EP 07766657.6 06.06.2007. En
(87) WO2007144807 21.12.2007. 200751
(97) EP 2044619 08.04.2009. 200915 En
(41) 22.06.2011. 201125
**(54) DOUBLE GATE TRANSISTOR AND METHOD OF MANUFACTURING SAME**
(71) NXP B.V., High Tech Campus 60, 5656 AG Eindhoven, NL
(72) SONSKY, Jan, c/o NXP Semiconductors, IP Department, HTC 60 1.31 Prof Holstlaan 4, NL-5656 AG Eindhoven, NL; VAN DUUREN, Michiel, J., c/o NXP Semiconductors, IP Department, HTC 60 1.31 Prof Holstlaan 4, NL-5656 AG Eindhoven, NL
(74) Schouten, Marcus Maria, et al, NXP B.V., IP & Licensing Department, High Tech Campus 60, 5656 AG Eindhoven, NL

**(51) (7)** **EP 1769557 ***
H 01M 8/08
H 01M 4/86
H 01M 4/88
B 05D 5/12
(23) 30.12.2010.
(30) US 10.06.2004. 578652 P
(86) PCT/US2005020639 10.06.2005.
(96) EP 05758010.2 10.06.2005. En
(87) WO2005124916 29.12.2005. 200552
(97) EP 1769557 04.04.2007. 200714 En
(41) 22.06.2011. 201125
**(54) PROCESSING TECHNIQUES FOR THE FABRICATION OF SOLID ACID FUEL CELL MEMBRANE ELECTRODE ASSEMBLIES**
(71) CALIFORNIA INSTITUTE OF TECHNOLOGY, 1201 East California Boulevard, Mail Code 309-81, Pasadena, CA 91125, US
(72) BOYSEN, Dane, 1200 E. California Blvd.,Mail Stop 309-81, Pasadena, CA 91125, US;
UDA, Tetsuya, 8-10-4-105 Kamiueno-Kurumageshi, Kyoto, Muko 607-0016, JP;
CHISHOLM, Calum, 491 S. Oakland Ave., Pasadena, CA 91101, US;
HAILE, Sossina, M., 2438 Highland Avenue, Altadena, CA 91001, US
(74) Wombwell, Francis, Potts, Kerr & Co., 15, Hamilton Square, Birkenhead, Merseyside CH41 6BR, GB

**(51) (7)** **EP 1756915 ***
H 01R 4/50
(23) 01.12.2010.
(30) US 07.06.2004. 577688 P
US 28.04.2005. 118181
(86) PCT/US2005017311 17.05.2005.
(96) EP 05750887.1 17.05.2005. En
(87) WO2005122336 22.12.2005. 200551
(97) EP 1756915 28.02.2007. 200709 En
(41) 25.05.2011. 201121

**(54) ELECTRICAL WEDGE CONNECTOR**
(71) Burndy Technology LLC, 47 East Industrial Park, Manchester, NH 03019, US
(72) DITROIA, Gary, 172 Golf Crest Drive, Acworth, Georgia 30101, US;
TIJERINA, Mario, Isabel La Catolca 495, Col. Algarin, 06880, MX;
GUILLAUMIN, Laurent, 98 Birch Road, Chester, New Hampshire 03036, US
(74) Domenego, Bertrand, et al, Cabinet Lavoix, 2, place d'Estienne d'Orves, 75441 Paris Cedex 09, FR

**(51) (8)** **EP 2018690 ***
***H 02B 1/56***
(23) 24.03.2011.
(30) DE 19.05.2006. 102006024682
(86) PCT/EP2007003671 26.04.2007.
(96) EP 07724601.5 26.04.2007. De
(87) WO2007134695 29.11.2007. 200748
(97) EP 2018690 28.01.2009. 200905 De
(41) 15.06.2011. 201124
**(54) ELECTRICAL CABINET WITH TWO COOLING CHANNELS**
(71) ADC GmbH, Beeskowdamm 3-11, 14167 Berlin, DE
(72) WANTSCHIK, Michael, Maxburgweg 4, 76187 Karlsruhe, DE

**(51) (8)** **EP 1941595 ***
***H 02J 1/00***
(23) 02.04.2011.
(30) US 06.10.2005. 246728
(86) PCT/US2006035408 11.09.2006.
(96) EP 06803380.2 11.09.2006. En
(87) WO2007044171 19.04.2007. 200716
(97) EP 1941595 09.07.2008. 200828 En
(41) 29.06.2011. 201126
**(54) DIODE POWER ARRAY**
(71) MVM Technologies, Inc., 940 Calle Amanecer, Suite K, San Clemente, California 92673, US
(72) HAMMOND, Bruce, 20949 Ashfield Ave., Castro Valley, California 94546, US
(74) Rupp, Christian, Mitscherlich & Partner, Patent- und Rechtsanwälte, Sonnenstraße 33, 80331 München, DE

**(51) (8)** **EP 1995853**
***H 02K 5/15***
***H 02K 5/16***
***H 02K 11/00***
(23) 01.12.2010.
(96) EP 07301063.9 24.05.2007. En
(97) EP 1995853 26.11.2008. 200848 En
(41) 25.05.2011. 201121
**(54) Electric Motor**
(71) Alcatel Lucent, 54, rue La Boétie, 75008 Paris, FR
(72) Pfendler, Klaus, Kirchstraße 9, 79848, Bonndorf, DE; Moser, Dieter, Brunnenstr. 6, 79848, Bonndorf, DE; Pfeifer, Christof, Im Bierbrunnen 5, 79848, Bonndorf, DE
(74) Brose, Gerhard, Alcatel Lucent, Intellectual Property & Standards, 70430 Stuttgart, DE

**(51) (8)** **EP 1894297 ***
***H 03H 9/02***
***H 03H 9/17***
***H 03H 9/56***
***H 03H 9/58***
(23) 31.12.2010.
(30) US 07.06.2005. 146118
(86) PCT/IB2006001457 02.06.2006.
(96) EP 06744811.8 02.06.2006. En
(87) WO2006131805 14.12.2006. 200650
(97) EP 1894297 05.03.2008. 200810 En
(41) 06.07.2011. 201127
**(54) FILM BULK ACOUSTIC WAVE RESONATOR WITH DIFFERENTIAL TOPOLOGY**
(71) Nokia Corporation, Keilalahdentie 4, 02150 Espoo, FI
(72) VILANDER, Ari, Hakalantie 17d, FIN-04200 Kerava, FI
(74) Eisenführ, Speiser & Partner, Postfach 31 02 60, 80102 München, DE

**(51) (8)** **EP 1805901 ***
***H 04B 1/38***
***H 04M 1/00***
(23) 05.01.2011.
(30) US 23.07.2004. 897555
(86) PCT/US2005026159 22.07.2005.
(96) EP 05775406.1 22.07.2005. En
(87) WO2006012558 02.02.2006. 200605
(97) EP 1805901 11.07.2007. 200728 En
(41) 29.06.2011. 201126
**(54) WIRELESS INTERACTIVE MULTI-USER DISPLAY SYSTEM AND METHOD**
(71) Willmore, Charles E., 850 S.W. 1st Street, Boca Raton, FL 33486, US
(72) Willmore, Charles E., 850 S.W. 1st Street, Boca Raton, FL 33486, US
(74) van Loon, C.J.J., et al, Vereenigde, Johan de Wittlaan 7, 2517 JR Den Haag, NL

**(51) (8)** **EP 2039015 ***
***H 04B 1/40***
***H 04B 7/08***
(23) 01.12.2010.
(30) EP 22.06.2006. 06115911
(86) PCT/IB2007052223 12.06.2007.
(96) EP 07766729.3 12.06.2007. En
(87) WO2007148261 27.12.2007. 200752
(97) EP 2039015 25.03.2009. 200913 En
(41) 25.05.2011. 201121
**(54) DUAL BAND RECEIVER WITH CONTROL MEANS FOR PREVENTING SIGNAL OVERLOADING**
(71) NXP B.V., High Tech Campus 60, 5656 AG Eindhoven, NL
(72) TOH, Yeow Teng, c/o NXP Semiconductors, IP Department, Cross Oak Lane, Redhill Surrey RH1 5HA, GB; KWONG, Kam Choon, c/o NXP Semiconductors, IP Department, Cross Oak Lane, Redhill Surrey RH1 5HA, GB
(74) Schouten, Marcus Maria, et al, NXP B.V., IP & Licensing Department, High Tech Campus 60, 5656 AG Eindhoven, NL

**(51) (8)** **EP 2263349** *
***H 04L 9/18***
***G 06F 19/00***
***H 04L 29/06***
(23) 08.12.2010.
(30) DE 14.03.2008. 102008014187
(86) PCT/DE2009000322 06.03.2009.
(96) EP 09724066.7 06.03.2009. De
(87) WO2009117981 01.10.2009. 200940
(97) EP 2263349 22.12.2010. 201051 De
(41) 01.06.2011. 201122
**(54) SYSTEM FOR THE DOCUMENT-BASED DATA EXCHANGE BETWEEN AT LEAST TWO DATA CARRIERS BY WAY OF PAPER OR REMOTE DATA TRANSMISSION**
(71) Niggl, Robert, Untersbergstrasse 30, 83435 Bad Reichenhall, DE
(72) Niggl, Robert, Untersbergstrasse 30, 83435 Bad Reichenhall, DE
(74) Szaunig, Bernd, et al, Anwaltskanzlei Söffge & Söffge . Berg, Moltkestrasse 3 - 5, 80803 München, DE

**(51) (8)** **EP 1872526** *
***H 04L 12/16***
***H 04Q 7/34***
***H 04Q 7/22***
***H 04L 12/66***
(23) 04.03.2011.
(30) US 18.04.2005. 672039 P
(86) PCT/CA2006000583 18.04.2006.
(96) EP 06741380.7 18.04.2006. En
(87) WO2006111004 26.10.2006. 200643
(97) EP 1872526 02.01.2008. 200801 En
(41) 13.07.2011. 201128
**(54) SYSTEM AND METHOD FOR CUSTOMIZING SERVICES FOR APPLICATIONS**
(71) RESEARCH IN MOTION LIMITED, 295 Phillip Street, Waterloo, Ontario N2L 3W8, CA
(72) FRITSCH, Brindusa, 9 Cherry Post Crescent, Toronto, Ontario M9C 2J9, CA;
BIBR, Viera, 6479 Mcniven Road, Box 828, Kilbride, Ontario L0P 1G0, CA;
SHENFIELD, Michael, 38 Stockdale Cresent, Richmond Hill, Ontario L4C 3S9, CA;
TAYLOR, Sean, Paul, 3839 Cabral Gardens, Mississauga, Ontario L5M 7A5, CA;
MATOVSKY, Michael, 810-233 Beecroft Road, North York, Ontario M2N 6Z9, CA;
VITANOV, Kamen, 5530 Glen Erin DR. Unit 30, Mississauga, Ontario L5M 6E8, CA
(74) Patel, Binesh, Barker Brettell LLP, 100 Hagley Road, Edgbaston, Birmingham, B16 8QQ, GB

**(51) (8)** **EP 2027677** *
***H 04L 12/24***
(23) 09.11.2010.
(30) US 07.12.2005. 295591
(86) PCT/CA2006001989 07.12.2006.
(96) EP 06828152.6 07.12.2006. En
(87) WO2007065260 14.06.2007. 200724
(97) EP 2027677 25.02.2009. 200909 En
(41) 08.06.2011. 201123
**(54) EMAIL SERVER SYSTEM AND METHOD**
(71) WatchGuard Technologies, Inc., 505 Fifth Avenue South, Suite 500, Seattle, WA 98014, US
(72) WALKER, Bruce, Murray, 1846 Stonepath Crescent, Mississauga, Ontario L4X 1X9, CA
(74) Grünecker, Kinkeldey, Stockmair & Schwanhäusser, Anwaltssozietät, Leopoldstrasse 4, 80802 München, DE

**(51) (7)** **EP 1745595** *
H 04L 12/26
(23) 13.11.2010.
(30) US 06.05.2004. 568246 P
(86) PCT/IL2005000464 03.05.2005.
(96) EP 05737589.1 03.05.2005. En
(87) WO2005109013 17.11.2005. 200546
(97) EP 1745595 24.01.2007. 200704 En
(41) 13.07.2011. 201128
**(54) EFFICIENT PROTECTION MECHANISMS IN A RING TOPOLOGY NETWORK UTILIZING LABEL SWITCHING PROTOCOLS**
(71) Alcatel Lucent, 54, rue La Boétie, 75008 Paris, FR
(72) UMANSKY, Igor, 1 Moshe Tavori Str., Building 10, Apt. 26, Petah-Tikva, 49444, IL;
GOREN, Gilad, Nirit 130, 44805 D.N. Ephraim, IL
(74) Rausch, Gabriele, Alcatel-Lucent Deutschland AG, Intellectual Property Group, Lorenzstrasse 10, 70435 Stuttgart, DE

**(51) (8)** **EP 1790132** *
***H 04L 12/437***
***H 04L 29/14***
(23) 18.11.2010.
(30) EP 02.09.2004. 04104222
(86) PCT/IB2005052713 17.08.2005.
(96) EP 05774640.6 17.08.2005. En
(87) WO2006024982 09.03.2006. 200610
(97) EP 1790132 30.05.2007. 200722 En
(41) 25.05.2011. 201121
**(54) DISTRIBUTED COMMUNICATION SYSTEM USING TWO COMMUNICATION CONTROLLERS AS WELL AS METHOD FOR OPERATING SUCH COMMUNICATION SYSTEM**
(71) NXP B.V., High Tech Campus 60, 5656 AG Eindhoven, NL
(72) Ungermann, Jörn, c/o Philips I.P., Standards GmbH, Weisshausstr. 2, 52066 Aachen, DE
(74) Schouten, Marcus Maria, et al, NXP B.V., IP & Licensing Department, High Tech Campus 60, 5656 AG Eindhoven, NL

**(51) (8)** **EP 2040426**
***H 04L 12/58***
***H 04L 29/06***
(23) 12.12.2010.
(96) EP 07117061.7 24.09.2007. En
(97) EP 2040426 25.03.2009. 200913 En
(41) 25.05.2011. 201121
**(54) System and method for controlling message attachment handling functions on a mobile device**
(71) RESEARCH IN MOTION LIMITED, 295 Phillip Street, Waterloo, Ontario N2L 3W8, CA
(72) Brown, Michael K, 8 Fernwood Place, Kitchener Ontario N2M 2Z2, CA;
Brown, Michael S, 104 Hawkswood Drive, Kitchener Ontario N2K 4J4, CA;
Kirkup, Michael G., 224 Dearborn Boulevard, Waterloo Ontario N2J 4Y3, CA

(74) Rickard, David John, et al, Ipulse, 26 Mallinson Road, London, SW11 1BP, GB

**(51) (8)** **EP 2005680 ***
***H 04L 12/66***
***H 04L 12/54***
***H 04L 29/06***
***H 04M 11/06***
***H 04Q 3/64***
***H 04Q 7/38***
(23) 03.11.2010.
(30) US 05.04.2006. 789217 P
(86) PCT/CA2007000592 05.04.2007.
(96) EP 07719520.4 05.04.2007. En
(87) WO2007112594 11.10.2007. 200741
(97) EP 2005680 24.12.2008. 200852 En
(41) 06.07.2011. 201127
**(54) A METHOD AND SYSTEM FOR SMART ROUTE DIALLING TO A DESTINATION IDENTIFIER USING A TELEPHONE**
(71) Wanless, James Andrew, 1300 Don Mills Road, Suite 200, Toronto, Ontario M3B 2W6, CA;
GELMAN, Mark, 78 Morisot Avenue, Thornhill, ON L4J 9H7, CA
(72) Wanless, James Andrew, 1300 Don Mills Road, Suite 200, Toronto, Ontario M3B 2W6, CA;
GELMAN, Mark, 78 Morisot Avenue, Thornhill, ON L4J 9H7, CA
(74) Rickard, David John, et al, Ipulse, 26 Mallinson Road, London, SW11 1BP, GB

**(51) (8)** **EP 1994701 ***
***H 04L 27/26***
(23) 22.01.2011.
(30) US 01.03.2006. 778515 P
(86) PCT/IB2007050595 24.02.2007.
(96) EP 07705941.8 24.02.2007. En
(87) WO2007099485 07.09.2007. 200736
(97) EP 1994701 26.11.2008. 200848 En
(41) 25.05.2011. 201121
**(54) IDENTIFICATION OF MAXIMUM CYCLIC DELEY IN AN OFDM SYSTEM BASED ON COHERENCE BANDWITH OF THE CHANNEL**
(71) NXP B.V., High Tech Campus 60, 5656 AG Eindhoven, NL
(72) LI, Pen, c/o NXP Semiconductors, IP Department, 1109 McKay Drive, M/S-41, San Jose, Ca 95131, US
(74) Schouten, Marcus Maria, et al, NXP B.V., IP & Licensing Department, High Tech Campus 60, 5656 AG Eindhoven, NL

**(51) (7)** **EP 1757012 ***
H 04L 29/06
H 04L 9/32
H 04L 12/28
(23) 01.12.2010.
(30) AU 11.05.2004. 2004902468
(86) PCT/AU2005000678 11.05.2005.
(96) EP 05739937.0 11.05.2005. En
(87) WO2005109744 17.11.2005. 200546
(97) EP 1757012 28.02.2007. 200709 En
(41) 25.05.2011. 201121
**(54) RE-ROUTING METHOD AND SYSTEM**
(71) Pipe Networks Ltd, 17, 127 Creek Street, Brisbane QLD 4000, AU
(72) BAXTER, Stephen Ross, C/- IP Enterprises Pty Ltd, Level 9, Indus House, 127 Creek Street, Brisbane, Queensland 4000, AU;
SLATTERY, Bevan Andrew, C/- IP Enterpises Pty Ltd, Level 9, Indus House, 127 Creek Street, Brisbane, Queensland 4000, AU
(74) Kenrick, Mark Lloyd, et al, Marks & Clerk LLP, Sussex House, 83-85 Mosley Street, Manchester, M2 3LG, GB

**(51) (8)** **EP 2018012**
***H 04L 29/06***
***H 04L 29/08***
(23) 22.10.2010.
(96) EP 07014193.2 19.07.2007. En
(97) EP 2018012 21.01.2009. 200904 En
(41) 25.05.2011. 201121
**(54) An interactive system designed for the supply or submission of general information as well as advertising, marketing and other material through electronic communication technologies, either in connection or in line with location-based services, with the**
(71) Balmadur Anstalt, C/o Tremaco Treuunternehmen reg., Essanestrasse 91, 9492 Eschen, LI
(72) Baladan, Dusko, Kvedrova cesta 20, 1000 Ljubjana, SI; Marolt, Uros, Ravnik 30a, 8232 Sentrupert, SI
(74) Marn, Jure, Ljubljanska ulica 9, 2000 Maribor, SI

**(51) (8)** **EP 1894415 ***
***H 04N 7/26***
(23) 30.01.2011.
(30) EP 03.06.2005. 05300453
(86) PCT/IB2006051732 31.05.2006.
(96) EP 06745050.2 31.05.2006. En
(87) WO2006129280 07.12.2006. 200649
(97) EP 1894415 05.03.2008. 200810 En
(41) 08.06.2011. 201123
**(54) VIDEO DECODER WITH HYBRID REFERENCE TEXTURE**
(71) NXP B.V., High Tech Campus 60, 5656 AG Eindhoven, NL
(72) VALENTE, Stéphane, c/o Société Civile SPID, 156 Boulevard Haussmann, F-75008 Paris, FR
(74) Schouten, Marcus Maria, et al, NXP B.V., IP & Licensing Department, High Tech Campus 60, 5656 AG Eindhoven, NL

**(51) (8)** **EP 2081413**
***H 05B 3/26***
(23) 04.01.2011.
(86) PCT/ES2006000355 16.06.2006.
(96) EP 06794030.4 16.06.2006. Es
(87) WO2007147906 27.12.2007. 200752
(97) EP 2081413 22.07.2009. 200930 En
(41) 22.06.2011. 201125
**(54) HEATING PLATE AND METHOD FOR MANUFACTURING IT**
(71) Sanchez Duque, David, C/ Obispo Segura Saez, 6 2r Izq., 10001 Cáceres, ES
(72) Sanchez Duque, David, C/ Obispo Segura Saez, 6 2r Izq., 10001 Cáceres, ES
(74) De la Fuente Fernandez, Dionisio, Patentes y Marcas de la Fuente, S.L., C/ Cuatro Amigos, 1 2r C, Madrid 28029, ES

**ИНДЕКС ОБЈАВЉЕНИХ ПОВУЧЕНИХ ЗАХТЕВА ЗА ПРОШИРЕЊЕ ЕВРОПСКИХ ПРИЈАВА ПАТЕНАТА ПРЕМА БРОЈУ ОБЈАВЕ ЕВРОПСКЕ ПРИЈАВЕ ПАТЕНТА**

| Broj objave evropske prijave patenta | (51) |
|---|---|
| EP 1557412 | C 07D 285/24 |
| | A 61K 31/549 |
| | A 61P 25/28 |
| EP 1657655 | ***G 06F 17/30*** |
| EP 1688420 | C 07D 495/04 |
| | A 61K 31/407 |
| | A 61K 31/4188 |
| | A 61K 31/454 |
| | A 61K 31/496 |
| | A 61K 31/5377 |
| | A 61K 38/21 |
| | A 61P 1/16 |
| | A 61P 31/14 |
| | A 61P 43/00 |
| EP 1689364* | A 61K 9/127 |
| EP 1694345* | A 61K 35/48 |
| | A 61K 48/00 |
| | A 61P 1/16 |
| EP 1694642* | C 07D 307/34 |
| | C 07H 19/04 |
| | C 07H 19/23 |
| EP 1694830* | C 12N 7/00 |
| | C 12N 7/02 |
| | C 12N 5/10 |
| | C 12N 15/63 |
| | C 07K 14/165 |
| | C 07K 16/10 |
| | A 61K 39/215 |
| | G 01N 33/569 |
| EP 1701732* | A 61K 38/06 |
| | A 61P 43/00 |
| EP 1705988* | A 61K 31/00 |
| | A 61K 31/454 |
| | A 61P 25/00 |
| EP 1711897* | G 06F 12/14 |
| | G 06F 11/36 |
| | G 06F 1/00 |
| EP 1712994 | ***G 06F 9/46*** |
| | ***G 06F 9/44*** |
| | ***G 06F 9/45*** |
| EP 1715892* | A 61K 39/395 |
| | A 61K 38/00 |
| | A 61P 17/02 |
| | A 61P 19/02 |
| | A 61P 35/00 |
| | A 61P 37/00 |
| | C 07D 207/00 |
| | C 07K 16/28 |
| EP 1716478* | G 06F 3/06 |
| EP 1720527* | A 61K 9/50 |
| | A 61K 31/4439 |
| EP 1720541* | A 61K 31/343 |
| | A 61P 25/06 |

| Broj objave evropske prijave patenta | (51) |
|---|---|
| EP 1720577* | A 61K 45/06 |
| | A 61K 31/575 |
| | A 61K 31/4015 |
| | A 61P 11/00 |
| | A 61K 9/00 |
| EP 1723129* | C 07D 277/64 |
| | C 07D 417/12 |
| | A 61K 31/496 |
| | A 61P 9/00 |
| EP 1723505* | G 06F 3/14 |
| | G 06F 17/30 |
| EP 1723547* | B 61L 27/00 |
| | B 61L 25/02 |
| EP 1732919* | C 07D 409/04 |
| | A 61K 31/506 |
| | A 61P 35/00 |
| | C 07D 495/04 |
| | C 07D 417/14 |
| | C 07D 409/14 |
| | C 07D 413/14 |
| EP 1732925* | C 07D 471/04 |
| | A 61K 31/4745 |
| EP 1734834* | A 23J 1/12 |
| | A 23L 1/05 |
| | B 01D 3/34 |
| | C 12P 7/06 |
| | C 12P 7/14 |
| EP 1734962* | ***A 61K 31/4709*** |
| | ***A 61P 25/00*** |
| | ***A 61P 29/00*** |
| | ***A 61K 31/49*** |
| EP 1738253* | G 06F 19/00 |
| | C 12N 5/06 |
| EP 1738766 | A 61K 45/00 |
| | A 61K 31/522 |
| | A 61P 3/00 |
| | A 61P 19/02 |
| | A 61P 19/04 |
| | A 61P 21/00 |
| | A 61P 29/00 |
| | A 61P 43/00 |
| | C 07D 473/06 |
| | C 07D 473/12 |
| EP 1739644 | ***G 09F 13/34*** |
| EP 1742534* | A 01N 43/04 |
| | A 61K 31/70 |
| EP 1742934* | C 07D 401/06 |
| | C 07D 401/14 |
| | C 07D 403/06 |
| | C 07D 417/14 |
| | A 61K 31/496 |
| | A 61P 1/00 |
| | A 61P 11/00 |
| | A 61P 17/00 |
| | A 61P 19/00 |

| Broj objave evropske prijave patenta | (51) |
|---|---|
| EP 1744744* | ***A 61K 31/353*** |
| | ***C 07D 305/14*** |
| | ***A 61K 31/216*** |
| | ***A 61P 35/00*** |
| | ***A 61K 36/53*** |
| EP 1745073* | C 07K 14/705 |
| | C 07K 14/71 |
| | C 07K 14/715 |
| | A 61K 38/04 |
| EP 1745595* | H 04L 12/26 |
| EP 1747019* | A 61K 47/48 |
| | A 61P 35/00 |
| | A 61P 35/04 |
| | A 61P 33/00 |
| | A 61P 31/12 |
| EP 1748997* | C 07D 333/38 |
| | C 07D 413/12 |
| | C 07D 409/12 |
| | A 61K 31/551 |
| | A 61P 7/02 |
| EP 1750719* | A 61K 31/541 |
| | A 61P 21/00 |
| | C 07D 279/02 |
| EP 1750858* | B 05D 3/10 |
| | B 05D 5/00 |
| | B 05D 7/14 |
| EP 1751134* | C 07D 401/04 |
| | C 07D 495/04 |
| | A 61K 31/404 |
| | A 61K 31/4365 |
| | A 61K 31/454 |
| | A 61P 25/00 |
| EP 1751143* | C 07D 403/12 |
| | A 61K 31/505 |
| | A 61P 35/00 |
| EP 1754035* | G 01K 3/04 |
| | G 01K 7/00 |
| EP 1755384* | A 01N 25/28 |
| EP 1756107* | ***C 07D 471/04*** |
| | ***C 07D 487/08*** |
| | ***C 07D 487/04*** |
| | ***C 07D 211/74*** |
| | ***C 07D 207/26*** |
| | ***C 07D 207/08*** |
| | ***C 07D 307/79*** |
| | ***C 07D 295/08*** |
| | ***C 07D 295/06*** |
| | ***C 07D 211/34*** |
| | ***A 61P 3/00*** |

| Broj objave evropske prijave patenta | (51) |
|---|---|
| EP 1756507* | F 28F 19/00 |
| | F 28F 13/12 |
| | F 16L 45/00 |
| | F 16L 55/00 |
| | B 08B 1/00 |
| | B 08B 9/04 |
| | B 08B 7/04 |
| | B 08B 9/00 |
| EP 1756915* | H 01R 4/50 |
| EP 1757012* | H 04L 29/06 |
| | H 04L 9/32 |
| | H 04L 12/28 |
| EP 1761772* | G 01N 33/50 |
| EP 1761786* | ***G 01R 15/14*** |
| | ***H 02G 1/02*** |
| EP 1763800* | G 06F 17/30 |
| EP 1763854* | G 07F 17/32 |
| | G 07G 1/00 |
| EP 1768699* | ***A 61K 45/00*** |
| | ***A 61K 31/713*** |
| | ***A 61K 39/395*** |
| | ***A 61P 35/00*** |
| EP 1769557* | H 01M 8/08 |
| | H 01M 4/86 |
| | H 01M 4/88 |
| | B 05D 5/12 |
| EP 1777225 | ***C 07D 413/04*** |
| | ***A 61K 31/498*** |
| | ***A 61K 31/538*** |
| | ***A 61K 31/553*** |
| | ***A 61K 45/00*** |
| | ***A 61P 9/00*** |
| | ***A 61P 25/04*** |
| | ***A 61P 29/00*** |
| | ***A 61P 37/08*** |
| | ***A 61P 43/00*** |
| | ***C 07D 401/04*** |
| | ***C 07D 417/04*** |
| | ***C 07D 417/14*** |
| | ***C 07D 413/14*** |
| EP 1778717* | ***C 07K 5/06*** |
| | ***C 07D 403/02*** |
| EP 1779856 | ***A 61K 33/04*** |
| | ***A 61K 36/06*** |
| | ***A 61K 36/064*** |
| | ***A 61P 25/28*** |
| EP 1781125* | ***A 24B 15/16*** |
| | ***A 24F 47/00*** |
| | ***G 01N 30/72*** |
| | ***G 01N 30/10*** |
| EP 1781824* | ***C 12Q 1/68*** |
| EP 1789081* | ***A 61K 39/00*** |
| | ***C 07K 7/00*** |
| EP 1790132* | ***H 04L 12/437*** |
| | ***H 04L 29/14*** |
| EP 1799224* | ***A 61K 31/55*** |
| | ***A 61P 25/00*** |
| | ***A 61P 25/22*** |
| | ***A 61P 25/24*** |

| Broj objave evropske prijave patenta | (51) |
|---|---|
| EP 1802660* | ***C 07K 16/28*** |
| | ***A 61P 35/02*** |
| | ***A 61P 19/02*** |
| | ***A 61P 25/00*** |
| EP 1805901* | ***H 04B 1/38*** |
| | ***H 04M 1/00*** |
| EP 1806129 | ***A 61K 9/14*** |
| | ***A 61K 9/10*** |
| | ***A 61K 9/16*** |
| | ***A 61K 9/20*** |
| | ***A 61K 9/48*** |
| | ***A 61K 47/26*** |
| | ***A 61K 47/40*** |
| EP 1807029* | ***A 61F 6/04*** |
| EP 1812281* | ***B 62K 15/00*** |
| | ***F 16B 7/22*** |
| EP 1818413 | ***C 12Q 1/68*** |
| EP 1818773 | ***G 06F 3/033*** |
| EP 1818774 | ***G 06F 3/033*** |
| EP 1818775 | ***G 06F 3/033*** |
| EP 1818776 | ***G 06F 3/033*** |
| EP 1824469* | ***A 61K 31/44*** |
| | ***A 61K 31/4402*** |
| | ***A 61K 31/47*** |
| | ***A 61K 31/196*** |
| | ***A 61K 31/198*** |
| | ***A 61P 3/10*** |
| | ***A 61P 17/06*** |
| | ***A 61P 25/02*** |
| | ***A 61P 29/00*** |
| | ***A 61P 35/00*** |
| | ***A 61P 35/02*** |
| EP 1825264* | ***C 12Q 1/34*** |
| | ***C 12M 1/34*** |
| EP 1827782* | ***B 27K 3/34*** |
| | ***B 27K 3/50*** |
| | ***B 27K 3/52*** |
| EP 1828002* | ***B 65D 51/22*** |
| EP 1828223* | ***C 07J 63/00*** |
| | ***A 61K 31/56*** |
| | ***A 61P 31/18*** |
| | ***C 07J 53/00*** |
| EP 1828696* | ***F 25D 23/10*** |
| | ***F 25D 23/00*** |
| EP 1829790 | ***B 65D 41/34*** |
| EP 1833481* | ***A 61K 31/496*** |
| | ***C 07D 401/14*** |
| | ***A 61P 35/00*** |
| EP 1835908* | ***A 61K 31/404*** |
| | ***A 61P 35/00*** |
| | ***A 61P 35/04*** |
| EP 1836190* | ***C 07D 401/06*** |
| EP 1839211* | ***G 06F 17/30*** |

| Broj objave evropske prijave patenta | (51) |
|---|---|
| EP 1841736* | ***C 07D 209/42*** |
| | ***A 61K 31/404*** |
| | ***A 61P 11/00*** |
| | ***A 61P 29/00*** |
| | ***C 07D 401/04*** |
| | ***C 07D 401/06*** |
| | ***C 07D 417/06*** |
| | ***C 07D 403/14*** |
| | ***C 07D 209/30*** |
| | ***C 07D 403/04*** |
| EP 1843204 | ***G 03F 7/20*** |
| | ***H 01L 21/027*** |
| EP 1844053* | ***C 07D 495/04*** |
| | ***C 07H 17/08*** |
| | ***C 07D 498/04*** |
| | ***A 61K 31/7048*** |
| | ***A 61K 31/7052*** |
| | ***A 61K 31/55*** |
| | ***A 61P 29/00*** |
| EP 1844076* | ***C 07K 16/28*** |
| | ***C 07K 16/30*** |
| | ***C 12N 15/13*** |
| | ***C 12N 15/85*** |
| | ***A 61K 47/48*** |
| | ***C 12N 5/10*** |
| | ***C 12N 1/21*** |
| | ***A 61K 39/395*** |
| | ***A 61P 35/00*** |
| | ***G 01N 33/577*** |
| | ***G 01N 33/574*** |
| EP 1845946* | ***A 61K 9/14*** |
| EP 1852801 | ***G 06F 21/20*** |
| EP 1853257* | ***A 61K 31/4155*** |
| | ***C 07D 231/12*** |
| EP 1854794 | ***C 07D 417/12*** |
| | ***A 61K 9/20*** |
| | ***A 61K 31/4439*** |
| | ***A 61P 3/10*** |
| | ***A 61J 1/03*** |
| EP 1856094* | ***C 07D 401/06*** |
| | ***A 61K 31/4709*** |
| | ***A 61P 11/06*** |
| EP 1863759* | ***C 07C 315/02*** |
| | ***C 07C 315/06*** |
| | ***C 07D 317/46*** |
| EP 1865381 | ***G 03F 7/20*** |
| | ***H 01L 21/027*** |
| EP 1872205* | ***G 06F 9/44*** |
| | ***G 06F 17/30*** |
| | ***H 03M 7/30*** |
| EP 1872526* | ***H 04L 12/16*** |
| | ***H 04Q 7/34*** |
| | ***H 04Q 7/22*** |
| | ***H 04L 12/66*** |
| EP 1874803* | ***C 07K 14/195*** |
| | ***C 07K 14/33*** |
| | ***A 61K 38/00*** |
| EP 1877023* | ***A 61J 1/00*** |
| EP 1877362* | ***C 07C 69/76*** |

| Broj objave evropske prijave patenta | (51) |
|---|---|
| EP 1877564* | ***C 12N 15/82*** |
| | ***G 01N 33/50*** |
| EP 1879454* | ***A 01N 35/04*** |
| EP 1884233 | ***A 61K 9/44*** |
| | ***B 41M 5/26*** |
| EP 1886670 | ***A 61K 9/16*** |
| | ***A 61K 9/20*** |
| | ***A 61K 31/13*** |
| EP 1887964* | ***A 61C 13/34*** |
| | ***A 61C 9/00*** |
| | ***A 61C 13/00*** |
| EP 1888030* | ***A 61K 9/08*** |
| | ***A 61K 9/00*** |
| | ***A 61K 31/35*** |
| EP 1888590* | ***C 07D 487/04*** |
| | ***A 61K 31/53*** |
| EP 1889205* | ***G 06K 9/00*** |
| EP 1891046* | ***C 07D 401/12*** |
| | ***A 61K 31/4402*** |
| | ***A 61K 31/4184*** |
| EP 1891060* | ***C 07D 413/04*** |
| EP 1892238 | ***C 07D 207/08*** |
| | ***A 61K 31/495*** |
| | ***A 61K 31/496*** |
| | ***A 61K 31/5377*** |
| | ***A 61K 31/538*** |
| | ***A 61K 31/54*** |
| | ***A 61P 1/04*** |
| | ***A 61P 11/06*** |
| | ***A 61P 19/02*** |
| | ***A 61P 25/00*** |
| | ***A 61P 29/00*** |
| | ***A 61P 37/02*** |
| | ***A 61P 37/08*** |
| | ***A 61P 43/00*** |
| | ***C 07D 207/27*** |
| | ***C 07D 207/404*** |
| | ***C 07D 211/46*** |
| | ***C 07D 211/58*** |
| EP 1893533* | ***C 02F 1/00*** |
| EP 1893618* | ***C 07D 495/04*** |
| EP 1894297* | ***H 03H 9/02*** |
| | ***H 03H 9/17*** |
| | ***H 03H 9/56*** |
| | ***H 03H 9/58*** |
| EP 1894415* | ***H 04N 7/26*** |
| EP 1894560 | ***A 61K 9/26*** |
| | ***A 61K 9/32*** |
| | ***A 61K 31/395*** |
| | ***A 61K 31/4164*** |
| EP 1896048* | ***A 61K 38/02*** |
| EP 1896258* | ***B 32B 33/00*** |
| | ***B 32B 27/12*** |
| EP 1896484* | ***C 07D 495/04*** |

| Broj objave evropske prijave patenta | (51) |
|---|---|
| EP 1896649* | ***D 06M 17/00*** |
| | ***D 06N 3/06*** |
| | ***A 61F 13/00*** |
| | ***A 43B 1/00*** |
| | ***A 41D 13/00*** |
| | ***A 41D 19/00*** |
| | ***A 41D 27/02*** |
| | ***A 63B 41/08*** |
| EP 1896669* | ***E 04B 1/26*** |
| | ***E 04B 1/58*** |
| EP 1898708* | ***A 23L 1/229*** |
| | ***A 23L 1/237*** |
| | ***A 23L 1/227*** |
| | ***A 61K 33/00*** |
| | ***A 23L 1/22*** |
| | ***A 61K 33/14*** |
| EP 1899736* | ***G 01R 21/133*** |
| | ***G 06Q 30/00*** |
| EP 1904145* | ***A 61M 31/00*** |
| | ***A 61M 5/30*** |
| | ***A 61M 5/00*** |
| | ***A 61M 5/20*** |
| EP 1907311* | ***B 66F 9/06*** |
| EP 1909597* | ***A 23L 1/22*** |
| | ***A 23L 1/227*** |
| | ***A 23L 1/29*** |
| | ***A 23L 1/237*** |
| EP 1913167* | ***C 22C 5/04*** |
| EP 1915334* | ***C 07C 55/02*** |
| | ***C 07C 69/593*** |
| | ***A 61K 31/194*** |
| | ***A 61K 31/195*** |
| EP 1917241* | ***C 07D 209/46*** |
| | ***C 07C 233/65*** |
| | ***A 61K 31/4035*** |
| | ***A 61K 31/165*** |
| EP 1917647* | ***G 07C 9/00*** |
| | ***E 05F 15/00*** |
| EP 1924518* | ***B 65H 49/18*** |
| EP 1930835 | ***G 06F 21/20*** |
| EP 1931224* | ***A 24B 15/28*** |
| | ***A 24D 1/00*** |
| EP 1931783* | ***C 12N 15/12*** |
| | ***C 12N 15/63*** |
| | ***C 07K 14/705*** |
| | ***C 12N 5/10*** |
| | ***A 61K 31/713*** |
| | ***A 61K 35/12*** |
| | ***A 61K 38/17*** |
| | ***C 12P 21/02*** |
| EP 1941595* | ***H 02J 1/00*** |
| EP 1942944* | ***A 61K 47/48*** |
| | ***A 61P 35/00*** |
| | ***A 61K 38/15*** |
| EP 1943254* | ***C 07D 493/10*** |
| | ***C 07D 403/06*** |
| | ***C 07F 5/02*** |
| | ***C 07C 49/213*** |
| | ***G 01N 31/22*** |
| | ***C 07D 207/34*** |

| Broj objave evropske prijave patenta | (51) |
|---|---|
| EP 1945568* | ***C 01F 7/02*** |
| | ***C 08K 3/22*** |
| | ***C 09K 21/14*** |
| EP 1951849* | ***C 10L 9/02*** |
| | ***C 10L 5/00*** |
| | ***C 10L 9/08*** |
| | ***C 10L 9/10*** |
| EP 1957541* | ***C 07K 19/00*** |
| EP 1962777* | ***A 61K 8/26*** |
| | ***A 61K 8/37*** |
| | ***A 61K 8/34*** |
| | ***A 61Q 15/00*** |
| EP 1962893* | ***A 61K 39/00*** |
| | ***A 61K 39/15*** |
| | ***A 61K 39/17*** |
| | ***A 61K 39/145*** |
| EP 1973882* | ***C 07D 221/16*** |
| | ***C 07D 401/04*** |
| | ***C 07D 401/14*** |
| | ***A 61K 31/495*** |
| | ***A 61P 35/00*** |
| EP 1980193 | ***A 47L 15/42*** |
| EP 1981356* | ***A 23L 1/00*** |
| | ***A 23D 9/05*** |
| | ***A 23C 9/16*** |
| EP 1981361* | ***A 23L 1/30*** |
| EP 1982760 | ***B 01J 20/26*** |
| | ***C 08L 33/06*** |
| | ***C 09K 3/00*** |
| EP 1986623* | ***A 61K 31/133*** |
| | ***A 61K 31/661*** |
| | ***A 61P 25/02*** |
| EP 1989219* | ***C 07K 1/30*** |
| EP 1994701* | ***H 04L 27/26*** |
| EP 1995853 | ***H 02K 5/15*** |
| | ***H 02K 5/16*** |
| | ***H 02K 11/00*** |
| EP 2001501* | ***A 61K 38/08*** |
| EP 2001510* | ***A 61K 39/395*** |
| | ***C 07K 16/28*** |
| EP 2004854* | ***C 12Q 1/68*** |
| | ***A 61K 31/337*** |
| EP 2005680* | ***H 04L 12/66*** |
| | ***H 04L 12/54*** |
| | ***H 04L 29/06*** |
| | ***H 04M 11/06*** |
| | ***H 04Q 3/64*** |
| | ***H 04Q 7/38*** |
| EP 2007812* | ***C 07K 16/28*** |
| | ***A 61K 39/395*** |
| | ***A 61P 7/06*** |
| EP 2007992* | ***F 16C 11/00*** |
| WO 2010134106 | ***B 66B 11/04*** |
| EP 2010545* | ***C 07D 495/04*** |
| EP 2010952* | ***G 02B 6/44*** |
| EP 2015710* | ***A 61F 2/44*** |

| Broj objave evropske prijave patenta | (51) |
|---|---|
| EP 2017442 | ***F 01N 3/20*** |
| | ***F 01N 11/00*** |
| | ***B 01D 53/94*** |
| | ***G 07C 5/00*** |
| | ***B 60R 16/023*** |
| EP 2018012 | ***H 04L 29/06*** |
| | ***H 04L 29/08*** |
| EP 2018690* | ***H 02B 1/56*** |
| EP 2019094 | ***C 07D 249/08*** |
| | ***A 61K 31/4196*** |
| | ***A 61K 31/437*** |
| | ***A 61K 31/4375*** |
| | ***A 61K 31/454*** |
| | ***A 61K 31/4545*** |
| | ***A 61K 31/5377*** |
| | ***A 61P 25/28*** |
| | ***A 61P 43/00*** |
| | ***C 07D 401/10*** |
| | ***C 07D 401/14*** |
| | ***C 07D 413/10*** |
| | ***C 07D 413/14*** |
| | ***C 07D 471/04*** |
| EP 2020843* | ***A 01F 29/01*** |
| | ***A 01F 29/04*** |
| | ***A 01D 34/53*** |
| EP 2020962* | ***A 61F 2/44*** |
| EP 2023934* | ***A 61K 31/535*** |
| EP 2027089* | ***C 07D 211/32*** |
| | ***C 07C 225/18*** |
| | ***G 01N 30/02*** |
| | ***G 01N 30/90*** |
| | ***G 01N 33/15*** |
| | ***A 61K 31/445*** |
| EP 2027109* | ***C 07D 401/12*** |
| | ***A 61K 31/4155*** |
| | ***A 61P 35/00*** |
| EP 2027350* | ***E 04C 2/52*** |
| | ***F 24D 3/16*** |
| | ***F 24D 5/10*** |
| EP 2027677* | ***H 04L 12/24*** |
| EP 2034998* | ***A 61K 31/44*** |
| EP 2035454* | ***C 07K 16/10*** |
| EP 2038892* | ***G 11C 16/06*** |
| | ***G 11C 16/26*** |
| EP 2039015* | ***H 04B 1/40*** |
| | ***H 04B 7/08*** |
| EP 2040426 | ***H 04L 12/58*** |
| | ***H 04L 29/06*** |
| EP 2040751* | ***A 61K 39/395*** |
| | ***A 61P 35/00*** |
| EP 2040789* | ***A 61M 31/00*** |
| EP 2041107* | ***C 07D 307/52*** |
| | ***A 61K 31/341*** |
| | ***A 61K 31/40*** |
| | ***A 61P 29/00*** |
| | ***A 61P 35/00*** |
| EP 2044066* | ***C 07D 417/14*** |
| | ***A 61P 31/00*** |
| | ***A 61K 31/427*** |
| EP 2044081* | ***C 07D 493/22*** |

| Broj objave evropske prijave patenta | (51) |
|---|---|
| EP 2044619* | ***H 01L 21/28*** |
| | ***H 01L 21/8247*** |
| | ***H 01L 27/115*** |
| | ***H 01L 29/423*** |
| EP 2044974 | ***A 61N 5/06*** |
| EP 2046994* | ***C 12Q 1/68*** |
| | ***C 12P 19/34*** |
| | ***C 07H 21/04*** |
| EP 2049151* | ***A 61K 38/43*** |
| | ***A 61K 38/46*** |
| | ***A 61P 35/04*** |
| | ***C 12N 9/00*** |
| | ***C 12N 9/22*** |
| EP 2052623 | ***A 23C 11/10*** |
| | ***A 23J 3/16*** |
| EP 2054810* | ***G 06F 13/42*** |
| EP 2061321* | ***A 01N 43/78*** |
| EP 2065379 | ***C 07D 401/12*** |
| | ***C 07D 405/14*** |
| | ***C 07D 493/10*** |
| | ***C 07D 513/14*** |
| | ***C 07D 519/00*** |
| | ***A 61K 31/4439*** |
| | ***A 61K 31/549*** |
| | ***A 61P 1/04*** |
| | ***A 61P 31/04*** |
| | ***A 61P 43/00*** |
| EP 2079449* | ***A 61K 9/20*** |
| | ***A 61K 31/325*** |
| | ***A 61K 47/02*** |
| EP 2081413 | ***H 05B 3/26*** |
| EP 2089002* | ***A 61K 9/20*** |
| | ***A 61K 31/325*** |
| | ***A 61K 47/02*** |
| EP 2089208* | ***B 29C 45/17*** |
| | ***B 29C 45/18*** |
| | ***B 29C 45/64*** |
| | ***B 29C 45/72*** |
| EP 2096925* | ***A 01N 57/12*** |
| | ***A 01N 59/06*** |
| | ***A 01N 51/00*** |
| | ***A 01N 47/40*** |
| | ***A 01P 3/00*** |
| | ***A 01P 7/04*** |
| EP 2099755* | ***C 07D 213/74*** |
| | ***C 07D 237/20*** |
| | ***C 07D 239/42*** |
| | ***C 07D 277/18*** |
| | ***C 07D 401/10*** |
| | ***C 07D 401/12*** |
| | ***C 07D 405/06*** |
| | ***C 07D 405/10*** |
| EP 2101768* | ***A 61K 31/437*** |
| | ***A 61K 31/4439*** |
| | ***A 61K 31/553*** |
| | ***A 61P 25/00*** |
| | ***C 07D 401/12*** |
| | ***C 07D 487/06*** |
| EP 2107909* | ***A 61K 31/66*** |
| | ***C 12P 7/02*** |

| Broj objave evropske prijave patenta | (51) |
|---|---|
| EP 2108016* | ***C 07D 401/14*** |
| | ***A 61K 31/506*** |
| | ***A 61P 3/10*** |
| | ***A 61P 35/00*** |
| | ***A 61P 29/00*** |
| EP 2113308 | ***B 05B 11/00*** |
| | ***B 29C 49/00*** |
| | ***B 65D 1/02*** |
| EP 2119706 | ***C 07D 213/75*** |
| | ***A 61K 31/4412*** |
| | ***A 61K 31/4427*** |
| | ***A 61K 31/496*** |
| | ***A 61K 31/506*** |
| | ***A 61K 31/5377*** |
| | ***A 61P 35/00*** |
| | ***C 07D 401/12*** |
| | ***C 07D 401/14*** |
| | ***C 07D 403/12*** |
| | ***C 12N 15/09*** |
| | ***C 12Q 1/68*** |
| | ***G 01N 33/15*** |
| | ***G 01N 33/48*** |
| | ***G 01N 33/50*** |
| | ***G 01N 33/53*** |
| | ***G 01N 33/574*** |
| EP 2125890* | ***C 07K 16/18*** |
| | ***C 07K 16/40*** |
| | ***G 01N 33/53*** |
| | ***G 01N 33/566*** |
| | ***G 01N 33/573*** |
| | ***G 01N 33/68*** |
| | ***C 12N 5/12*** |
| EP 2130430 | ***A 01K 13/00*** |
| EP 2130928 | ***C 12Q 1/68*** |
| EP 2133104 | ***A 61L 9/12*** |
| | ***A 47K 10/32*** |
| | ***B 65H 75/18*** |
| EP 2133622 | ***F 21S 8/08*** |
| | ***F 21V 19/00*** |
| | ***H 05K 1/18*** |
| | ***F 21Y 101/02*** |
| EP 2134721* | ***C 07D 498/04*** |
| | ***C 07D 498/14*** |
| | ***C 07D 519/00*** |
| | ***A 61K 31/424*** |
| | ***A 61P 31/04*** |
| EP 2137706* | ***G 07C 9/00*** |
| EP 2139329* | ***C 07D 487/04*** |
| | ***A 61K 31/519*** |
| | ***A 61P 35/00*** |
| EP 2140349* | ***G 06F 9/445*** |
| EP 2141498 | ***G 01N 33/569*** |
| EP 2143542 | ***B 29C 49/46*** |
| | ***B 65B 3/02*** |
| | ***B 29C 49/06*** |
| | ***B 29C 49/12*** |
| | ***B 29C 49/78*** |

| Broj objave evropske prijave patenta | (51) |
|---|---|
| EP 2143543 | ***B 29C 49/46*** |
| | ***B 65B 3/02*** |
| | ***B 29C 49/06*** |
| | ***B 29C 49/12*** |
| | ***B 29C 49/78*** |
| EP 2143544 | ***B 29C 49/46*** |
| | ***B 29C 49/12*** |
| | ***B 65B 3/02*** |
| | ***B 29C 49/78*** |
| | ***B 29C 49/06*** |
| EP 2143545 | ***B 29C 49/46*** |
| | ***B 65B 3/02*** |
| | ***B 65B 55/08*** |
| | ***B 65B 55/10*** |
| | ***B 29C 49/06*** |
| | ***B 29C 49/12*** |
| EP 2144855* | ***C 02F 11/16*** |
| | ***C 02F 3/32*** |
| EP 2148603* | ***A 47K 13/24*** |
| EP 2156098* | ***F 23J 1/00*** |
| EP 2162379* | ***B 66B 21/12*** |
| | ***B 61K 1/00*** |
| EP 2162843* | ***G 06F 19/00*** |
| EP 2164491* | ***A 61K 31/445*** |
| | ***A 61K 31/4468*** |
| | ***A 61K 31/453*** |
| | ***A 61K 31/4535*** |
| | ***A 61K 31/4545*** |
| | ***C 07D 211/34*** |
| | ***C 07D 211/58*** |
| | ***C 07D 211/96*** |
| | ***C 07D 405/12*** |
| | ***C 07D 409/12*** |
| | ***A 61P 29/00*** |
| | ***A 61P 31/18*** |
| | ***A 61P 37/00*** |
| | ***A 61P 11/06*** |
| | ***A 61P 11/00*** |

| Broj objave evropske prijave patenta | (51) |
|---|---|
| EP 2165271* | ***G 06F 17/27*** |
| | ***G 06F 19/00*** |
| | ***G 06T 13/00*** |
| | ***G 06T 15/70*** |
| EP 2167113* | ***A 61K 38/17*** |
| | ***A 61K 38/08*** |
| | ***A 61K 38/10*** |
| | ***A 61K 39/395*** |
| | ***A 61P 9/10*** |
| | ***A 61P 25/28*** |
| | ***A 61P 35/00*** |
| EP 2167495* | ***C 07D 409/12*** |
| | ***A 61K 31/4412*** |
| | ***A 61P 7/02*** |
| EP 2169600 | ***G 06Q 10/00*** |
| EP 2171665* | ***G 06Q 30/00*** |
| EP 2173438* | ***A 61P 29/00*** |
| | ***A 61P 35/00*** |
| | ***G 01N 33/569*** |
| | ***G 01N 33/574*** |
| | ***A 61K 39/00*** |
| EP 2176230* | ***C 07D 231/56*** |
| | ***A 61K 31/416*** |
| | ***A 61P 21/00*** |
| EP 2179401* | ***G 06T 13/00*** |
| | ***G 06F 17/10*** |
| | ***G 06T 15/70*** |
| EP 2186402 | ***A 01K 67/027*** |
| | ***C 12N 15/85*** |
| | ***G 01N 33/00*** |
| EP 2191929 | ***B 23K 37/04*** |
| | ***B 23K 7/00*** |
| EP 2193508* | ***G 07F 11/36*** |
| EP 2196495 | ***C 08K 3/36*** |
| | ***C 08J 5/00*** |

| Broj objave evropske prijave patenta | (51) |
|---|---|
| EP 2199042 | ***B 26D 3/16*** |
| | ***B 26D 7/06*** |
| | ***B 65D 39/00*** |
| | ***B 26D 3/02*** |
| | ***B 23D 21/00*** |
| EP 2199957 | ***G 06Q 10/00*** |
| EP 2202230 | ***C 07D 333/54*** |
| | ***C 07D 333/56*** |
| | ***C 07C 62/26*** |
| | ***C 07C 62/38*** |
| | ***A 61K 31/381*** |
| | ***A 61K 31/19*** |
| | ***A 61P 31/00*** |
| EP 2212326* | ***C 07D 487/04*** |
| | ***A 61K 31/52*** |
| | ***A 61P 35/00*** |
| EP 2218041* | ***G 06Q 10/00*** |
| EP 2259167 | ***G 06F 3/023*** |
| | ***G 06F 3/048*** |
| EP 2263349* | ***H 04L 9/18*** |
| | ***G 06F 19/00*** |
| | ***H 04L 29/06*** |
| EP 2314292 | ***A 61K 31/277*** |
| | ***A 61K 31/55*** |
| | ***A 61P 33/00*** |
| | ***A 61P 33/10*** |

ИНДЕКС ОБЈАВЉЕНИХ ПОВУЧЕНИХ ЗАХТЕВА ЗА ПРОШИРЕЊЕ ЕВРОПСКИХ ПРИЈАВА ПАТЕНАТА ПРЕМА ПОДНОСИОЦИМА ПРИЈАВА

| (71) | (51) | Broj objave evropske prijave patenta | (54) |
|---|---|---|---|
| 4SC AG, DE | ***C 07D 495/04*** | EP 1893618* | TETRAHYDROPYRIDOTHIOPHENES FOR USE IN THE TREATMENT OF CANCER |
| 4SC AG, DE | ***C 07D 495/04*** | EP 1896484* | TETRAHYDROPYRIDOTHIOPHENES FOR USE IN THE TREATMENT OF CANCER |
| ABBOTT LABORATORIES, US | ***C 07D 487/04***<br>***A 61K 31/519***<br>***A 61P 35/00*** | EP 2139329* | NOVEL IMIDAZO BASED HETEROCYCLES |
| Acque S.p.a., IT | ***C 02F 11/16***<br>***C 02F 3/32*** | EP 2144855* | PROCESS FOR BIOSTABILIZATION AND HUMIFICATION OF BIOLOGICAL SLUDGE IN PLANTED FILTERING BEDS |
| ADC GmbH, DE | ***H 02B 1/56*** | EP 2018690* | ELECTRICAL CABINET WITH TWO COOLING CHANNELS |
| Aditech Pharma AG, CH | ***C 07C 55/02***<br>***C 07C 69/593***<br>***A 61K 31/194***<br>***A 61K 31/195*** | EP 1915334* | NOVEL SALTS OF FUMARIC ACID MONOALKYLESTERS AND THEIR PHARMACEUTICAL USE |
| AFFIRIS Forschungs- und Entwicklungs GmbH, AT | ***A 61K 39/00***<br>***C 07K 7/00*** | EP 1789081* | TREATMENT OF ATHEROSCLEROSIS |
| Albemarle Corporation, US | ***C 01F 7/02***<br>***C 08K 3/22***<br>***C 09K 21/14*** | EP 1945568* | THERMALLY STABLE ALUMINUM HYDROXIDE PARTICLES AND THEIR USE AS FILLERS IN EPOXY LAMINATE RESINS |
| Alcatel Lucent, FR | H 04L 12/26 | EP 1745595* | EFFICIENT PROTECTION MECHANISMS IN A RING TOPOLOGY NETWORK UTILIZING LABEL SWITCHING PROTOCOLS |
| Alcatel Lucent, FR | ***H 02K 5/15***<br>***H 02K 5/16***<br>***H 02K 11/00*** | EP 1995853 | Electric Motor |
| Alcoa Packaging Products LLC, US | ***G 02B 6/44*** | EP 2010952* | ALUMINUM ALLOYS FOR ARMORED CABLES |
| Alla, US | ***A 61F 6/04*** | EP 1807029* | MALE STIMULATING CONTRACEPTIVES |
| Alla,US; | ***A 61F 6/04*** | EP 1807029* | MALE STIMULATING CONTRACEPTIVES |
| Alla,US; | ***A 61F 6/04*** | EP 1807029* | MALE STIMULATING CONTRACEPTIVES |
| Allgemeine Gold- und Silberscheideanstalt AG, DE | ***C 22C 5/04*** | EP 1913167* | PLATINUM ALLOY AND METHOD OF PRODUCTION THEREOF |
| Alltech, US | ***A 61K 33/04***<br>***A 61K 36/06***<br>***A 61K 36/064***<br>***A 61P 25/28*** | EP 1779856 | Use of selenium compounds, especially selenium yeasts in the treatment of Alzheimer, neurodegenerative diseases and diabetes |
| Amgen Inc., US | ***C 07K 16/28***<br>***A 61K 39/395***<br>***A 61P 7/06*** | EP 2007812* | ERYTHROPOIETIN RECEPTOR AGONISTS |
| Amgen Inc., US | ***C 07K 16/10*** | EP 2035454* | ANTIBODIES TO SARS CORONAVIRUS |
| Anand,US; | ***G 01R 15/14***<br>***H 02G 1/02*** | EP 1761786* | ELECTRIC POWER MONITORING AND RESPONSE SYSTEM |
| Ansaldo STS USA, US | B 61L 27/00<br>B 61L 25/02 | EP 1723547* | GEOGRAPHIC INFORMATION SYSTEM AND METHOD FOR MONITORING DYNAMIC TRAIN POSITIONS |

| (71) | (51) | Broj objave evropske prijave patenta | (54) |
|---|---|---|---|
| Apoptec AG, AT | ***G 01N 33/569*** | EP 2141498 | Cellular COPD diagnosis |
| Aracaria B.V., NL | ***A 61N 5/06*** | EP 2044974 | Light-emitting diode (LED) light therapy device |
| Ashland Licensing and Intellectual Property LLC, US | B 05D 3/10<br>B 05D 5/00<br>B 05D 7/14 | EP 1750858* | PROCESS FOR COATING AND CLEANING METAL SURFACES |
| Astex Therapeutics Limited, GB | ***C 07D 401/12***<br>***A 61K 31/4155***<br>***A 61P 35/00*** | EP 2027109* | 4- (2, 6-DICHLORO-BENZOYLAMINO) -1H-PYRAZOLE-S-CARBOXYLIC ACID (1-METHANESULPH0NYL-PIPERIDIN-4-YL) -AMIDE FOR THE TREATMENT OF CANCER |
| AstraZeneca AB, SE | C 07D 401/06<br>C 07D 401/14<br>C 07D 403/06<br>C 07D 417/14<br>A 61K 31/496<br>A 61P 1/00<br>A 61P 11/00<br>A 61P 17/00<br>A 61P 19/00 | EP 1742934* | PIPERIDINE DERIVATIVES AS MODULATORS OF CHEMOKINE RECEPTOR CCR5 |
| AstraZeneca AB, SE | ***C 07D 487/04***<br>***A 61K 31/52***<br>***A 61P 35/00*** | EP 2212326* | 2-ANILINOPURIN-8-ONES AS INHIBITORS OF TTK/MPS1 FOR THE TREATMENT OF PROLIFERATIVE DISORDERS |
| B4 Group Ingatlanhasznosító Kft.,HU; | ***G 07F 11/36*** | EP 2193508* | VENDING MACHINE FOR MEDICINES |
| Balance King Kft., HU | ***A 47K 13/24*** | EP 2148603* | TOILET SEAT PROVIDED WITH BODY WEIGHT METER |
| Balmadur Anstalt, LI | ***H 04L 29/06***<br>***H 04L 29/08*** | EP 2018012 | An interactive system designed for the supply or submission of general information as well as advertising, marketing and other material through electronic communication technologies, either in connection or in line with location-based services, with the |
| Bayer CropScience AG, DE | ***A 01N 57/12***<br>***A 01N 59/06***<br>***A 01N 51/00***<br>***A 01N 47/40***<br>***A 01P 3/00***<br>***A 01P 7/04*** | EP 2096925* | PESTICIDE COMPOSITION COMPRISING FOSETYL-ALUMINIUM AND AN INSECTICIDE ACTIVE SUBSTANCE |
| Bayer Pharmaceuticals Corporation, US | ***A 61K 38/02*** | EP 1896048* | PITUITARY ADENYLATE CYCLASE ACTIVATING PEPTIDE (PACAP) RECEPTOR (VPAC2) AGONISTS AND THEIR PHARMACOLOGICAL METHODS OF USE |
| Bayer Schering Pharma Aktiengesellschaft, DE | ***C 07D 409/12***<br>***A 61K 31/4412***<br>***A 61P 7/02*** | EP 2167495* | SUBSTITUTED OXAZOLIDINONES AND THE USE THEREOF |
| Beiersdorf Aktiengesellschaft, DE | ***A 61K 8/26***<br>***A 61K 8/37***<br>***A 61K 8/34***<br>***A 61Q 15/00*** | EP 1962777* | IMPROVED LONG-TERM EFFECT OF ANTIPERSPIRANTS |

| (71) | (51) | Broj objave evropske prijave patenta | (54) |
|---|---|---|---|
| Berezin,DK; | ***A 61K 38/17***<br>***A 61K 38/08***<br>***A 61K 38/10***<br>***A 61K 39/395***<br>***A 61P 9/10***<br>***A 61P 25/28***<br>***A 61P 35/00*** | EP 2167113* | NEUROPLASTIN DERIVED PEPTIDES |
| Bimek Srl., IT | ***A 01F 29/01***<br>***A 01F 29/04***<br>***A 01D 34/53*** | EP 2020843* | SHREDDER DEVICE, IN PARTICULAR FOR AGRICULTURAL MACHINES |
| Biogen Idec MA Inc., US | ***C 07K 5/06***<br>***C 07D 403/02*** | EP 1778717* | CELL ADHESION INHIBITORS |
| Biogen Idec MA Inc., US | ***A 61K 39/395***<br>***A 61P 35/00*** | EP 2040751* | COMBINATION THERAPY EMPLOYING LYMPHOTOXIN BETA RECEPTOR BINDING MOLECULES IN COMBINATION WITH SECOND AGENTS |
| Biogen Idec MA Inc., US | ***C 07K 16/18***<br>***C 07K 16/40***<br>***G 01N 33/53***<br>***G 01N 33/566***<br>***G 01N 33/573***<br>***G 01N 33/68***<br>***C 12N 5/12*** | EP 2125890* | ANTIBODIES TO PHOSPHORYLATED-IRAK4 |
| Biolipox AB, SE | ***C 07D 209/42***<br>***A 61K 31/404***<br>***A 61P 11/00***<br>***A 61P 29/00***<br>***C 07D 401/04***<br>***C 07D 401/06***<br>***C 07D 417/06***<br>***C 07D 403/14***<br>***C 07D 209/30***<br>***C 07D 403/04*** | EP 1841736* | INDOLES USEFUL IN THE TREATMENT OF INFLAMMATION |
| BioMarin IGA Limited, BS | ***C 07D 231/56***<br>***A 61K 31/416***<br>***A 61P 21/00*** | EP 2176230* | TREATMENT OF DUCHENNE MUSCULAR DYSTROPHY |
| Bock,DK; | ***A 61K 38/17***<br>***A 61K 38/08***<br>***A 61K 38/10***<br>***A 61K 39/395***<br>***A 61P 9/10***<br>***A 61P 25/28***<br>***A 61P 35/00*** | EP 2167113* | NEUROPLASTIN DERIVED PEPTIDES |
| Boehringer Ingelheim International GmbH,DE; | C 07D 333/38<br>C 07D 413/12<br>C 07D 409/12<br>A 61K 31/551<br>A 61P 7/02 | EP 1748997* | SUBSTITUTED THIOPHENE-2-CARBOXYLIC ACID AMIDES, THE PRODUCTION THEREOF AND THE USE THEREOF AS DRUGS |
| Boehringer Ingelheim International GmbH,DE; | A 61K 31/541<br>A 61P 21/00<br>C 07D 279/02 | EP 1750719* | TREATMENT OF DISEASES ASSOCIATED WITH ALTERED LEVEL OF AMYLOID BETA PEPTIDES |
| Boehringer Ingelheim International GmbH,DE; | ***C 07D 401/12***<br>***A 61K 31/4402***<br>***A 61K 31/4184*** | EP 1891046* | POLYMORPHS OF ETHYL 3-[(2-{[4-(HEXYLOXYCARBONYLAMINO-IMINOMETHYL)PHENYLAMINO]METHYL}-1-METHYL-1H-BENZIMIDAZOLE-5-CARBONYL)PYRIDIN-2-YLAMINO]PROPIONATE |

| (71) | (51) | Broj objave evropske prijave patenta | (54) |
|---|---|---|---|
| Boehringer Ingelheim Pharma GmbH & Co. KG, DE | C 07D 333/38<br>C 07D 413/12<br>C 07D 409/12<br>A 61K 31/551<br>A 61P 7/02 | EP 1748997* | SUBSTITUTED THIOPHENE-2-CARBOXYLIC ACID AMIDES, THE PRODUCTION THEREOF AND THE USE THEREOF AS DRUGS |
| Boehringer Ingelheim Pharma GmbH & Co. KG, DE | A 61K 31/541<br>A 61P 21/00<br>C 07D 279/02 | EP 1750719* | TREATMENT OF DISEASES ASSOCIATED WITH ALTERED LEVEL OF AMYLOID BETA PEPTIDES |
| Boehringer Ingelheim Pharma GmbH & Co. KG, DE | ***C 07D 401/12***<br>***A 61K 31/4402***<br>***A 61K 31/4184*** | EP 1891046* | POLYMORPHS OF ETHYL 3-[(2-{[4-(HEXYLOXYCARBONYLAMINO-IMINOMETHYL)PHENYLAMINO]METHYL}-1-METHYL-1H-BENZIMIDAZOLE-5-CARBONYL)PYRIDIN-2-YLAMINO]PROPIONATE |
| Boehringer Ingelheim Pharmaceuticals,US; | A 61K 31/541<br>A 61P 21/00<br>C 07D 279/02 | EP 1750719* | TREATMENT OF DISEASES ASSOCIATED WITH ALTERED LEVEL OF AMYLOID BETA PEPTIDES |
| Boehringer Ingelheim Vetmedica GmbH, DE | ***C 07K 1/30*** | EP 1989219* | METHOD FOR THE MANUFACTURE OF LANTIBIOTICS |
| Bristol-Myers Squibb Company, US | ***C 07D 487/04***<br>***A 61K 31/53*** | EP 1888590* | CRYSTALLINE FORMS OF A PYRROLOTRIAZINE COMPOUND |
| Bristol-Myers Squibb Company, US | ***C 07D 417/14***<br>***A 61P 31/00***<br>***A 61K 31/427*** | EP 2044066* | CRYSTALLINE FORMS OF N-[5-[[[5-(1,1-DIMETHYLETHYL)-2-OXAZOLYL]METHYL] THIO]-2-THIAZOLYL]-4-PIPERIDINECARBOXAMIDE |
| Broin and Associates, US | A 23J 1/12<br>A 23L 1/05<br>B 01D 3/34<br>C 12P 7/06<br>C 12P 7/14 | EP 1734834* | IMPROVED DISTILLATION PROCESS |
| Burndy Technology LLC, US<br>C.Q.M. LTD., IL | H 01R 4/50<br>F 28F 19/00<br>F 28F 13/12<br>F 16L 45/00<br>F 16L 55/00<br>B 08B 1/00<br>B 08B 9/04<br>B 08B 7/04<br>B 08B 9/00 | EP 1756915*<br>EP 1756507* | ELECTRICAL WEDGE CONNECTOR<br>BALL TRAP WITH SAFETY-RELEASE GATE |
| CALIFORNIA INSTITUTE OF TECHNOLOGY, US | H 01M 8/08<br>H 01M 4/86<br>H 01M 4/88<br>B 05D 5/12 | EP 1769557* | PROCESSING TECHNIQUES FOR THE FABRICATION OF SOLID ACID FUEL CELL MEMBRANE ELECTRODE ASSEMBLIES |
| Cartiera Lucchese S.p.A., IT | ***A 61L 9/12***<br>***A 47K 10/32***<br>***B 65H 75/18*** | EP 2133104 | Core for Rolls |
| CELGENE CORPORATION, US | A 61K 31/00<br>A 61K 31/454<br>A 61P 25/00 | EP 1705988* | IMMUNOMODULATORY COMPOUNDS FOR THE TREATMENT OF CENTRAL NERVOUS SYSTEM DISORDERS |
| CELGENE CORPORATION, US | G 06F 19/00<br>C 12N 5/06 | EP 1738253* | SYSTEMS AND METHODS FOR PROVIDING A STEM CELL BANK |
| Cell Therapeutics Europe S.R.L., IT | ***A 61K 31/404***<br>***A 61P 35/00***<br>***A 61P 35/04*** | EP 1835908* | INDOLE DERIVATIVES WITH ANTITUMOR ACTIVITY |

| (71) | (51) | Broj objave evropske prijave patenta | (54) |
|---|---|---|---|
| Cellnet Innovations, US | ***G 01R 21/133***<br>***G 06Q 30/00*** | EP 1899736* | SYSTEMS AND METHODS FOR UTILITY METER DEMAND DATA COLLECTION |
| Centre National de la Recherche Scientifique,FR; | ***A 61K 31/66***<br>***C 12P 7/02*** | EP 2107909* | COMPOUNDS AND PHARMACEUTICAL COMPOSITIONS FOR THE TREATMENT OF LIVER DISORDERS |
| ChemoCentryx, US | A 61K 39/395<br>A 61K 38/00<br>A 61P 17/02<br>A 61P 19/02<br>A 61P 35/00<br>A 61P 37/00<br>C 07D 207/00<br>C 07K 16/28 | EP 1715892* | METHODS AND COMPOSITIONS FOR MODULATING ANGIOGENESIS |
| CNR Consiglio Nazionale Delle Ricerche,IT; | ***C 02F 11/16***<br>***C 02F 3/32*** | EP 2144855* | PROCESS FOR BIOSTABILIZATION AND HUMIFICATION OF BIOLOGICAL SLUDGE IN PLANTED FILTERING BEDS |
| Cocuzzi, IT | ***G 07C 9/00*** | EP 2137706* | UNIVERSAL KEY AND MECCHANICAL-ELECTRONIC LOCK WITH STANDARDISABLE COMPONENTS |
| Codice Exterior Gestion De Soportes S.L., ES | ***G 09F 13/34*** | EP 1739644 | Advertising display panel with image updating and improvements for said display panel. |
| Columna Pty Ltd, AU | ***A 61F 2/44*** | EP 2015710* | IMPLANTING A TISSUE PROSTHESIS |
| Columna Pty Ltd, AU | ***A 61F 2/44*** | EP 2020962* | A TISSUE PROSTHESIS |
| Copenhagen University,DK; | ***A 61K 38/17***<br>***A 61K 38/08***<br>***A 61K 38/10***<br>***A 61K 39/395***<br>***A 61P 9/10***<br>***A 61P 25/28***<br>***A 61P 35/00*** | EP 2167113* | NEUROPLASTIN DERIVED PEPTIDES |
| Corky's Carbon and Combustion Pty Ltd, AU | ***C 10L 9/02***<br>***C 10L 5/00***<br>***C 10L 9/08***<br>***C 10L 9/10*** | EP 1951849* | PROCESS, SYSTEM AND APPARATUS FOR PASSIVATING CARBONACEOUS MATERIALS |
| CoroNovative B.V., NL | C 12N 7/00<br>C 12N 7/02<br>C 12N 5/10<br>C 12N 15/63<br>C 07K 14/165<br>C 07K 16/10<br>A 61K 39/215<br>G 01N 33/569 | EP 1694830* | NOVEL ATYPICAL PNEUMONIA-CAUSING VIRUS |
| Cosmo Technologies Ltd, IE | ***A 61K 9/26***<br>***A 61K 9/32***<br>***A 61K 31/395***<br>***A 61K 31/4164*** | EP 1894560 | Oral antimicrobial pharmaceutical compositions comprising metronidazole |
| Crosset, BE | ***B 26D 3/16***<br>***B 26D 7/06***<br>***B 65D 39/00***<br>***B 26D 3/02***<br>***B 23D 21/00*** | EP 2199042 | Chamfering equipment for cylindrical stoppers |
| CSB-System AG, DE | ***G 06Q 10/00*** | EP 2218041* | SYSTEM FOR THE VISUAL DISPLAY OF CLEAVING PROCESS DATA IN MEAT PROCESSING |

| (71) | (51) | Broj objave evropske prijave patenta | (54) |
|---|---|---|---|
| CV THERAPEUTICS, US | C 07D 277/64<br>C 07D 417/12<br>A 61K 31/496<br>A 61P 9/00 | EP 1723129* | 1-AKAN-2-OL SUBSTITUTED PIPERAZINE AND PIPERIDINE COMPOUNDS |
| De Gryse, FR | ***E 04B 1/26***<br>***E 04B 1/58*** | EP 1896669* | HOLLOW U-SHAPED SECTION AND MODULE FOR THE RAPID ASSEMBLY OF PIECES OF TIMBER, WHICH IS INTENDED, IN PARTICULAR, FOR THE CONSTRUCTION OF BUILDING STRUCTURES OR FRAMES, AND PRODUCTION METHOD THEREOF |
| Deveraux Holdings Pty Ltd,AU; | ***C 10L 9/02***<br>***C 10L 5/00***<br>***C 10L 9/08***<br>***C 10L 9/10*** | EP 1951849* | PROCESS, SYSTEM AND APPARATUS FOR PASSIVATING CARBONACEOUS MATERIALS |
| EGIS Gyógyszergyár Nyrt, HU | C 07D 401/04<br>C 07D 495/04<br>A 61K 31/404<br>A 61K 31/4365<br>A 61K 31/454<br>A 61P 25/00 | EP 1751134* | PYRIDINE DERIVATIVES OF ALKYL OXINDOLES AS 5-HT7 RECEPTOR ACTIVE AGENTS |
| Eisai R&D Management Co., JP | ***A 61K 9/14***<br>***A 61K 9/10***<br>***A 61K 9/16***<br>***A 61K 9/20***<br>***A 61K 9/48***<br>***A 61K 47/26***<br>***A 61K 47/40*** | EP 1806129 | COMPOSITION CONTAINING FINE PARTICLES AND PROCESS FOR PRODUCING THE SAME |
| Eisai R&D Management Co., JP | ***A 61K 9/44***<br>***B 41M 5/26*** | EP 1884233 | METHOD OF MARKING COMPOSITION FOR ORAL ADMINISTRATION |
| Eisai R&D Management Co., JP | ***C 07D 207/08***<br>***A 61K 31/495***<br>***A 61K 31/496***<br>***A 61K 31/5377***<br>***A 61K 31/538***<br>***A 61K 31/54***<br>***A 61P 1/04***<br>***A 61P 11/06***<br>***A 61P 19/02***<br>***A 61P 25/00***<br>***A 61P 29/00***<br>***A 61P 37/02***<br>***A 61P 37/08***<br>***A 61P 43/00***<br>***C 07D 207/27***<br>***C 07D 207/404***<br>***C 07D 211/46***<br>***C 07D 211/58*** | EP 1892238 | 1, 2-DI(CYCLIC GROUP)SUBSTITUTED BENZENE DERIVATIVE |

| (71) | (51) | Broj objave evropske prijave patenta | (54) |
|---|---|---|---|
| Eisai R&D Management Co., JP | ***C 07D 249/08***<br>***A 61K 31/4196***<br>***A 61K 31/437***<br>***A 61K 31/4375***<br>***A 61K 31/454***<br>***A 61K 31/4545***<br>***A 61K 31/5377***<br>***A 61P 25/28***<br>***A 61P 43/00***<br>***C 07D 401/10***<br>***C 07D 401/14***<br>***C 07D 413/10***<br>***C 07D 413/14***<br>***C 07D 471/04*** | EP 2019094 | HETEROCYCLIC TYPE CINNAMIDE DERIVATIVE |
| Eisai R&D Management Co., JP | ***C 07D 401/12***<br>***C 07D 405/14***<br>***C 07D 493/10***<br>***C 07D 513/14***<br>***C 07D 519/00***<br>***A 61K 31/4439***<br>***A 61K 31/549***<br>***A 61P 1/04***<br>***A 61P 31/04***<br>***A 61P 43/00*** | EP 2065379 | BENZIMIDAZOLE COMPOUND HAVING GASTRIC ACID SECRETION INHIBITORY ACTIVITY |
| Eisai R&D Management Co., JP | ***C 07D 213/75***<br>***A 61K 31/4412***<br>***A 61K 31/4427***<br>***A 61K 31/496***<br>***A 61K 31/506***<br>***A 61K 31/5377***<br>***A 61P 35/00***<br>***C 07D 401/12***<br>***C 07D 401/14***<br>***C 07D 403/12***<br>***C 12N 15/09***<br>***C 12Q 1/68***<br>***G 01N 33/15***<br>***G 01N 33/48***<br>***G 01N 33/50***<br>***G 01N 33/53***<br>***G 01N 33/574*** | EP 2119706 | PYRIDINE OR PYRIMIDINE DERIVATIVE HAVING EXCELLENT CELL GROWTH INHIBITION EFFECT AND EXCELLENT ANTI-TUMOR EFFECT ON CELL STRAIN HAVING AMPLIFICATION OF HGFR GENE |
| Electrolux Home Products Corporation N.V., BE | ***A 47L 15/42*** | EP 1980193 | Method for cleaning the filter of a dishwasher and dishwasher for carrying out the same |
| Epopack Co., TW | ***B 05B 11/00***<br>***B 29C 49/00***<br>***B 65D 1/02*** | EP 2113308 | Container having wall portions with different pressure resistance |
| EURO-CELTIQUE S.A., LU | ***A 61M 31/00*** | EP 2040789* | MEDICATION APPLICATOR DEVICE |

| (71) | (51) | Broj objave evropske prijave patenta | (54) |
|---|---|---|---|
| Euroscreen S.A., BE | ***A 61K 31/445***<br>***A 61K 31/4468***<br>***A 61K 31/453***<br>***A 61K 31/4535***<br>***A 61K 31/4545***<br>***C 07D 211/34***<br>***C 07D 211/58***<br>***C 07D 211/96***<br>***C 07D 405/12***<br>***C 07D 409/12***<br>***A 61P 29/00***<br>***A 61P 31/18***<br>***A 61P 37/00***<br>***A 61P 11/06***<br>***A 61P 11/00*** | EP 2164491* | PIPERIDINE-4-ACETIC ACID DERIVATIVES AND THEIR USE |
| Farkas,HU; | ***G 07F 11/36*** | EP 2193508* | VENDING MACHINE FOR MEDICINES |
| Foldenauer, DE | ***A 01K 13/00*** | EP 2130430 | Cleaning device for dog claws |
| Fraunhofer-Gesellschaft zur Förderung der, DE | ***C 08K 3/36***<br>***C 08J 5/00*** | EP 2196495 | Use of oxide-containing compositions to improve the barrier properties of polymer materials |
| GELMAN, CA | ***H 04L 12/66***<br>***H 04L 12/54***<br>***H 04L 29/06***<br>***H 04M 11/06***<br>***H 04Q 3/64***<br>***H 04Q 7/38*** | EP 2005680* | A METHOD AND SYSTEM FOR SMART ROUTE DIALLING TO A DESTINATION IDENTIFIER USING A TELEPHONE |
| Genentech, US | ***C 07K 16/28***<br>***A 61P 35/02***<br>***A 61P 19/02***<br>***A 61P 25/00*** | EP 1802660* | METHODS OF USING DEATH RECEPTOR LIGANDS AND CD20 ANTIBODIES |
| Genentech, US | ***C 07K 16/28***<br>***C 07K 16/30***<br>***C 12N 15/13***<br>***C 12N 15/85***<br>***A 61K 47/48***<br>***C 12N 5/10***<br>***C 12N 1/21***<br>***A 61K 39/395***<br>***A 61P 35/00***<br>***G 01N 33/577***<br>***G 01N 33/574*** | EP 1844076* | ANTI-EPHB2 ANTIBODIES AND METHODS USING SAME |
| Genentech, US | ***A 61K 47/48***<br>***A 61P 35/00***<br>***A 61K 38/15*** | EP 1942944* | MACROCYCLIC DEPSIPEPTIDE ANTIBODY-DRUG CONJUGATES AND METHODS |
| Genentech, US | ***A 61K 39/395***<br>***C 07K 16/28*** | EP 2001510* | METHODS OF TREATING LUPUS USING CD4 ANTIBODIES |
| Genentech, US | ***A 61P 29/00***<br>***A 61P 35/00***<br>***G 01N 33/569***<br>***G 01N 33/574***<br>***A 61K 39/00*** | EP 2173438* | TREATMENTS AND DIAGNOSTICS FOR CANCER, INFLAMMATORY DISORDERS AND AUTOIMMUNE DISORDERS |
| Genentech,US; | ***C 12Q 1/68*** | EP 1781824* | NOVEL GENE DISRUPTIONS, COMPOSITIONS AND METHODS RELATING THERETO |
| Genentech,US; | ***A 01K 67/027***<br>***C 12N 15/85***<br>***G 01N 33/00*** | EP 2186402 | Knock-out animal models for novel genes and methods of use |

| (71) | (51) | Broj objave evropske prijave patenta | (54) |
|---|---|---|---|
| Glaxo Group Limited, GB | ***C 07D 495/04***<br>***C 07H 17/08***<br>***C 07D 498/04***<br>***A 61K 31/7048***<br>***A 61K 31/7052***<br>***A 61K 31/55***<br>***A 61P 29/00*** | EP 1844053* | ANTI-INFLAMMATORY MACROLIDE CONJUGATES |
| Glenmark Pharmaceuticals S.A., CH | ***C 07D 213/74***<br>***C 07D 237/20***<br>***C 07D 239/42***<br>***C 07D 277/18***<br>***C 07D 401/10***<br>***C 07D 401/12***<br>***C 07D 405/06***<br>***C 07D 405/10*** | EP 2099755* | ACETYLENE DERIVATIVES AS STEAROYL COA DESATURASE INHIBITORS |
| GM Global Technology Operations, US | ***F 16C 11/00*** | EP 2007992* | COMBINATION CYLINDRICAL AND SPHERICAL JOINT |
| Google Inc., US | ***G 06F 17/30*** | EP 1839211* | LOCAL ITEM EXTRACTION |
| HAMILTON SEWING SUPPLY, US | ***B 65H 49/18*** | EP 1924518* | THREAD SPOOL AND CAP |
| Huffman, US | ***A 61C 13/34***<br>***A 61C 9/00***<br>***A 61C 13/00*** | EP 1887964* | DENTAL MODELING ASSEMBLY AND METHODS |
| Husky Injection Molding Systems S.A., LU | ***B 29C 45/17***<br>***B 29C 45/18***<br>***B 29C 45/64***<br>***B 29C 45/72*** | EP 2089208* | A CONTINUOUS MOLDING MACHINE |
| IDENIX Pharmaceuticals,US; | ***A 61K 31/66***<br>***C 12P 7/02*** | EP 2107909* | COMPOUNDS AND PHARMACEUTICAL COMPOSITIONS FOR THE TREATMENT OF LIVER DISORDERS |
| IDEXX LABORATORIES, US | ***C 12Q 1/34***<br>***C 12M 1/34*** | EP 1825264* | METHODS AND DEVICES FOR DETECTING PANCREATIC LIPASE |
| ImmuneRegen BioSciences, US | ***A 61K 38/08*** | EP 2001501* | METHOD TO REDUCE THE RISK AND/OR SEVERITY OF ANTHRAX INFECTION |
| Irinox S.p.A., IT | ***F 25D 23/10***<br>***F 25D 23/00*** | EP 1828696* | TEMPERATURE COOLER FOR RAPID COOLING AND/OR RAPID FREEZING OF PRODUCTS TO BE STORED AT LOW TEMPERATURE FOR DOMESTIC USE |
| ISTITUTO NAZIONALE PER LO STUDIO, IT | A 61K 47/48<br>A 61P 35/00<br>A 61P 35/04<br>A 61P 33/00<br>A 61P 31/12 | EP 1747019* | CAMPTOTHECIN DERIVATIVES CONJUGATED IN POSITION 20 WITH INTEGRIN ANTAGONISTS |
| Jajah, US | ***G 06Q 30/00*** | EP 2171665* | A METHOD AND SYSTEM OF PROCESSING TELEPHONE CALLS INVOLVING TARGETED COMMERCIALS |
| Janssen Pharmaceutica N.V., BE | ***A 61K 31/535*** | EP 2023934* | 3,4-DIHYDRO-2H-BENZO[1,4]OXAZINE AND THIAZINE DERIVATIVES AS CETP INHIBITORS |
| Janssen Pharmaceutica N.V., BE | ***A 61K 9/20***<br>***A 61K 31/325***<br>***A 61K 47/02*** | EP 2079449* | PHENYLALKYLAMINO CARBAMATE COMPOSITIONS |
| Janssen Pharmaceutica N.V.,BE; | ***A 61K 9/20***<br>***A 61K 31/325***<br>***A 61K 47/02*** | EP 2089002* | PHENYLALKYL CARBAMATE COMPOSITIONS |

| (71) | (51) | Broj objave evropske prijave patenta | (54) |
|---|---|---|---|
| Janssen Pharmaceutica NV, BE | G 01N 33/50 | EP 1761772* | NEW INTRAVENOUS DRUG ADMINISTRATION AND BLOOD SAMPLING MODEL IN THE AWAKE RAT |
| Janssen Pharmaceutica NV, BE | ***B 27K 3/34***<br>***B 27K 3/50***<br>***B 27K 3/52*** | EP 1827782* | USE OF ANILINOPYRIMIDINES IN WOOD PROTECTION |
| Janssen Pharmaceutica NV, BE | ***A 61K 9/08***<br>***A 61K 9/00***<br>***A 61K 31/35*** | EP 1888030* | PEDIATRIC FORMULATION OF TOPIRAMATE |
| Janssen Pharmaceutica, BE | ***A 61K 31/44*** | EP 2034998* | 1,2,3,4-TETRAHYDRO-QUINOLINE DERIVATIVES AS CETP INHIBITORS |
| Japan Tobacco Inc., JP | C 07D 495/04<br>A 61K 31/407<br>A 61K 31/4188<br>A 61K 31/454<br>A 61K 31/496<br>A 61K 31/5377<br>A 61K 38/21<br>A 61P 1/16<br>A 61P 31/14<br>A 61P 43/00 | EP 1688420 | 5-5-MEMBERED FUSED HETEROCYCLIC COMPOUND AND USE THEREOF AS HCV POLYMERASE INHIBITOR |
| Japan Tobacco, JP | ***C 07D 413/04***<br>***A 61K 31/498***<br>***A 61K 31/538***<br>***A 61K 31/553***<br>***A 61K 45/00***<br>***A 61P 9/00***<br>***A 61P 25/04***<br>***A 61P 29/00***<br>***A 61P 37/08***<br>***A 61P 43/00***<br>***C 07D 401/04***<br>***C 07D 417/04***<br>***C 07D 417/14***<br>***C 07D 413/14*** | EP 1777225 | FUSED BENZAMIDE COMPOUND AND VANILLOID RECEPTOR 1 (VR1) ACTIVITY INHIBITOR |
| Jezek, IT | ***B 66B 11/04*** | WO 2010134106 | DEVICE FOR SAVING ENERGY DURING VERTICAL AND HORIZONTAL MOTIONS WHEREIN THE RESISTING TORQUE CAN BE SPLIT INTO TWO TORQUES OPPOSING EACH OTHER |
| Keister, US | ***G 01R 15/14***<br>***H 02G 1/02*** | EP 1761786* | ELECTRIC POWER MONITORING AND RESPONSE SYSTEM |
| Kemper, DE | ***B 23K 37/04***<br>***B 23K 7/00*** | EP 2191929 | Cutting table |
| Kingspan Research and Developments Limited, IE | ***E 04C 2/52***<br>***F 24D 3/16***<br>***F 24D 5/10*** | EP 2027350* | A COMPOSITE INSULATING PANEL |
| Kiss, HU | ***G 07F 11/36*** | EP 2193508* | VENDING MACHINE FOR MEDICINES |
| Knapp Logistics & Automation Inc., US | ***B 66F 9/06*** | EP 1907311* | SHUTTLES FOR TRANSPORTING GOODS |
| Koronis Pharmaceuticals, US | C 07D 307/34<br>C 07H 19/04<br>C 07H 19/23 | EP 1694642* | MUTAGENIC HETEROCYCLES |

| (71) | (51) | Broj objave evropske prijave patenta | (54) |
|---|---|---|---|
| Kyowa Hakko Kirin Co., JP | A 61K 45/00<br>A 61K 31/522<br>A 61P 3/00<br>A 61P 19/02<br>A 61P 19/04<br>A 61P 21/00<br>A 61P 29/00<br>A 61P 43/00<br>C 07D 473/06<br>C 07D 473/12 | EP 1738766 | PREVENTIVE AND/OR THERAPEUTIC AGENT FOR DISEASE ACCOMPANIED BY CHRONIC MUSCLE/SKELETON PAIN |
| Lechner, AT | ***B 66B 21/12***<br>***B 61K 1/00*** | EP 2162379* | TRANSPORT SYSTEM |
| Les Laboratoires Servier, FR | C 07D 285/24<br>A 61K 31/549<br>A 61P 25/28 | EP 1557412 | Fluorinated benzothiadiazine derivatives and their use as AMPA receptor modulators |
| Les Laboratoires Servier, FR | ***A 61K 31/437***<br>***A 61K 31/4439***<br>***A 61K 31/553***<br>***A 61P 25/00***<br>***C 07D 401/12***<br>***C 07D 487/06*** | EP 2101768* | USE OF NEUROPROTECTIVE COMPOUNDS FOR OBTAINING DRUGS FOR TREATING NEURODEGENERATIVE DISEASES |
| Lexicon Pharmaceuticals, US | ***C 12Q 1/68*** | EP 1781824* | NOVEL GENE DISRUPTIONS, COMPOSITIONS AND METHODS RELATING THERETO |
| Lexicon Pharmaceuticals, US | ***A 01K 67/027***<br>***C 12N 15/85***<br>***G 01N 33/00*** | EP 2186402 | Knock-out animal models for novel genes and methods of use |
| L'Université Montpellier II, FR | ***A 61K 31/66***<br>***C 12P 7/02*** | EP 2107909* | COMPOUNDS AND PHARMACEUTICAL COMPOSITIONS FOR THE TREATMENT OF LIVER DISORDERS |
| Magaldi Industrie S.R.L., IT | ***F 23J 1/00*** | EP 2156098* | SYSTEM FOR DRY EXTRACTING / COOLING HETEROGENEOUS MATERIAL ASHES WITH CONTROL OF THE AIR INLET IN THE COMBUSTION CHAMBER |
| Margiotta, AU | ***D 06M 17/00***<br>***D 06N 3/06***<br>***A 61F 13/00***<br>***A 43B 1/00***<br>***A 41D 13/00***<br>***A 41D 19/00***<br>***A 41D 27/02***<br>***A 63B 41/08*** | EP 1896649* | LIQUID IMPERMEABLE MATERIAL |
| Mccool, US | ***A 61K 9/20***<br>***A 61K 31/325***<br>***A 61K 47/02*** | EP 2089002* | PHENYLALKYL CARBAMATE COMPOSITIONS |
| Mentis Cura ehf., IS | ***G 06F 19/00*** | EP 2162843* | SYSTEM AND A METHOD FOR GENERATING A QUANTITATIVE MEASURE REFLECTING THE SEVERITY OF A MEDICAL CONDITION |
| Merck Serono SA, CH | ***C 07K 19/00*** | EP 1957541* | COMPOSITIONS AND METHODS OF PRODUCING HYBRID ANTIGEN BINDING MOLECULES AND USES THEREOF |
| Merial Ltd., US | ***A 01N 35/04*** | EP 1879454* | PESTICIDAL SUBSTITUTED PHENYLETHERS |

| (71) | (51) | Broj objave evropske prijave patenta | (54) |
|---|---|---|---|
| Merz Pharma GmbH & Co. KGaA, DE | ***A 61K 31/55***<br>***A 61P 25/00***<br>***A 61P 25/22***<br>***A 61P 25/24*** | EP 1799224* | MEMANTINE FOR THE TREATMENT OF CHILDHOOD BEHAVIORAL DISORDERS |
| Merz Pharma GmbH & Co. KGaA, DE | ***C 07K 14/195***<br>***C 07K 14/33***<br>***A 61K 38/00*** | EP 1874803* | CARRIER FOR TARGETING NERVE CELLS |
| METABOLEX, US | ***C 07C 69/76*** | EP 1877362* | CRYSTALLINE SOLID AND AMORPHOUS FORMS OF (-)-HALOFENATE |
| Metadata LLC, US | G 06F 17/30 | EP 1763800* | DEFINING A DATA DEPENDENCY PATH THROUGH A BODY OF RELATED DATA |
| Micurx Pharmaceuticals, US | ***C 07D 498/04***<br>***C 07D 498/14***<br>***C 07D 519/00***<br>***A 61K 31/424***<br>***A 61P 31/04*** | EP 2134721* | ANTIMICROBIAL HETEROCYCLIC COMPOUNDS FOR TREATMENT OF BACTERIAL INFECTIONS |
| Mona Sojaland GmbH, DE | ***A 23C 11/10***<br>***A 23J 3/16*** | EP 2052623 | Method and facility for continuous manufacture of foodstuffs made of pulses |
| Monsanto Technology, US | A 01N 25/28 | EP 1755384* | MICROCAPSULES HAVING ACTIVATED RELEASE OF CORE MATERIAL THEREIN |
| Monsanto Technology, US | ***C 12N 15/82***<br>***G 01N 33/50*** | EP 1877564* | INTERACTION OF GLYPHOSATE WITH PHOTOSYSTEM II INHIBITOR HERBICIDES AS A SELECTION TOOL FOR ROUNDUP READY EVENTS |
| Mount Sinai School of Medicine, US | ***A 61K 39/00***<br>***A 61K 39/15***<br>***A 61K 39/17***<br>***A 61K 39/145*** | EP 1962893* | CHIMERIC VIRUSES PRESENTING NON-NATIVE SURFACE PROTEINS AND USES THEREOF |
| MVM Technologies, US | ***H 02J 1/00*** | EP 1941595* | DIODE POWER ARRAY |
| Myozone Limited, NZ | ***A 61J 1/00*** | EP 1877023* | DISPENSING DEVICE |
| Nagasawa, US | A 61K 38/06<br>A 61P 43/00 | EP 1701732* | SULFHYDRYL PROTECTED GLUTATHIONE PRODRUG |
| Németh,HU; | ***G 07F 11/36*** | EP 2193508* | VENDING MACHINE FOR MEDICINES |
| Nestec S.A., CH | ***A 23L 1/00***<br>***A 23D 9/05***<br>***A 23C 9/16*** | EP 1981356* | IMPROVEMENT OF COLD LIQUID SOLUBILITY OF FAT-CONTAINING POWDERS |
| Nestec S.A., CH | ***B 29C 49/46***<br>***B 65B 3/02***<br>***B 29C 49/06***<br>***B 29C 49/12***<br>***B 29C 49/78*** | EP 2143542 | Method and apparatus for packaging a liquid food product |
| Nestec S.A., CH | ***B 29C 49/46***<br>***B 65B 3/02***<br>***B 29C 49/06***<br>***B 29C 49/12***<br>***B 29C 49/78*** | EP 2143543 | Device and method for packaging a liquid food product |
| Nestec S.A., CH | ***B 29C 49/46***<br>***B 29C 49/12***<br>***B 65B 3/02***<br>***B 29C 49/78***<br>***B 29C 49/06*** | EP 2143544 | Method and apparatus for packaging a liquid food product |

| (71) | (51) | Broj objave evropske prijave patenta | (54) |
|---|---|---|---|
| Nestec S.A., CH | ***B 29C 49/46***<br>***B 65B 3/02***<br>***B 65B 55/08***<br>***B 65B 55/10***<br>***B 29C 49/06***<br>***B 29C 49/12*** | EP 2143545 | Method and apparatus for packaging a liquid food product |
| Network Appliance, US | G 06F 3/06 | EP 1716478* | SYSTEM AND METHOD FOR LUN CLONING |
| NEUROGEN CORPORATION, US | ***C 07D 471/04***<br>***C 07D 487/08***<br>***C 07D 487/04***<br>***C 07D 211/74***<br>***C 07D 207/26***<br>***C 07D 207/08***<br>***C 07D 307/79***<br>***C 07D 295/08***<br>***C 07D 295/06***<br>***C 07D 211/34***<br>***A 61P 3/00*** | EP 1756107* | ARYL-SUBSTITUTED PIPERAZINE DERIVATIVES |
| Niggl, DE | ***H 04L 9/18***<br>***G 06F 19/00***<br>***H 04L 29/06*** | EP 2263349* | SYSTEM FOR THE DOCUMENT-BASED DATA EXCHANGE BETWEEN AT LEAST TWO DATA CARRIERS BY WAY OF PAPER OR REMOTE DATA TRANSMISSION |
| NIKON CORPORATION, JP | ***G 03F 7/20***<br>***H 01L 21/027*** | EP 1843204 | EXPOSURE DEVICE, EXPOSURE METHOD, AND MICRO DEVICE MANUFACTURING METHOD |
| NIKON CORPORATION, JP | ***G 03F 7/20***<br>***H 01L 21/027*** | EP 1865381 | EXPOSURE APPARATUS, METHOD FOR MANUFACTURING EXPOSURE APPARATUS, AND METHOD FOR MANUFACTURING MICRODEVICE |
| Nokia Corporation, FI | ***H 03H 9/02***<br>***H 03H 9/17***<br>***H 03H 9/56***<br>***H 03H 9/58*** | EP 1894297* | FILM BULK ACOUSTIC WAVE RESONATOR WITH DIFFERENTIAL TOPOLOGY |
| Novartis AG, CH | ***A 61K 31/277***<br>***A 61K 31/55***<br>***A 61P 33/00***<br>***A 61P 33/10*** | EP 2314292 | Endoparasiticidal compositions |
| Novartis Vaccines and Diagnostics, US | C 07D 409/04<br>A 61K 31/506<br>A 61P 35/00<br>C 07D 495/04<br>C 07D 417/14<br>C 07D 409/14<br>C 07D 413/14 | EP 1732919* | SUBSTITUTED THIOPHENE DERIVATIVES AS ANTI-CANCER AGENTS |
| Novozymes North America,US; | A 23J 1/12<br>A 23L 1/05<br>B 01D 3/34<br>C 12P 7/06<br>C 12P 7/14 | EP 1734834* | IMPROVED DISTILLATION PROCESS |

| (71) | (51) | Broj objave evropske prijave patenta | (54) |
|---|---|---|---|
| Nuon Therapeutics Pty Limited, AU | ***A 61K 31/44***<br>***A 61K 31/4402***<br>***A 61K 31/47***<br>***A 61K 31/196***<br>***A 61K 31/198***<br>***A 61P 3/10***<br>***A 61P 17/06***<br>***A 61P 25/02***<br>***A 61P 29/00***<br>***A 61P 35/00***<br>***A 61P 35/02*** | EP 1824469* | A METHOD OF MODULATING B CELL FUNCTIONING |
| NXP B.V., NL | G 01K 3/04<br>G 01K 7/00 | EP 1754035* | RECORDING AND STORING A TEMPERATURE |
| NXP B.V., NL | ***H 04L 12/437***<br>***H 04L 29/14*** | EP 1790132* | DISTRIBUTED COMMUNICATION SYSTEM USING TWO COMMUNICATION CONTROLLERS AS WELL AS METHOD FOR OPERATING SUCH COMMUNICATION SYSTEM |
| NXP B.V., NL | ***H 04N 7/26*** | EP 1894415* | VIDEO DECODER WITH HYBRID REFERENCE TEXTURE |
| NXP B.V., NL | ***H 04L 27/26*** | EP 1994701* | IDENTIFICATION OF MAXIMUM CYCLIC DELEY IN AN OFDM SYSTEM BASED ON COHERENCE BANDWITH OF THE CHANNEL |
| NXP B.V., NL | ***G 11C 16/06***<br>***G 11C 16/26*** | EP 2038892* | FLASH MEMORY DEVICE HAVING A FLASH CACHE PORTION AND A METHOD FOR USING THE SAME |
| NXP B.V., NL | ***H 04B 1/40***<br>***H 04B 7/08*** | EP 2039015* | DUAL BAND RECEIVER WITH CONTROL MEANS FOR PREVENTING SIGNAL OVERLOADING |
| NXP B.V., NL | ***H 01L 21/28***<br>***H 01L 21/8247***<br>***H 01L 27/115***<br>***H 01L 29/423*** | EP 2044619* | DOUBLE GATE TRANSISTOR AND METHOD OF MANUFACTURING SAME |
| NXP B.V., NL | ***G 06F 13/42*** | EP 2054810* | MAC AND PHY INTERFACE ARRANGEMENT |
| Nycomed GmbH, DE | A 61K 45/06<br>A 61K 31/575<br>A 61K 31/4015<br>A 61P 11/00<br>A 61K 9/00 | EP 1720577* | CICLESONIDE AND GLYCOPYRRONIUM COMBINATION |
| Nycomed GmbH, DE | C 07D 471/04<br>A 61K 31/4745 | EP 1732925* | NOVEL N-(ALKOXYALKYL)CARBAMOYL-SUBSTITUTED 6-PHENYL-BENZONAPHTHYRIDINE DERIVATIVES AND THEIR USE AS PDE3/4 INHIBITORS |
| Objectvideo, US | ***G 06K 9/00*** | EP 1889205* | HUMAN DETECTION AND TRACKING FOR SECURITY APPLICATIONS |
| Omya Development AG, CH | ***C 12Q 1/68*** | EP 2130928 | Nucleic acids and methods for detecting turfgrass pathogenic fungi |
| Oncomethylome Sciences, BE | ***C 12Q 1/68***<br>***C 12P 19/34***<br>***C 07H 21/04*** | EP 2046994* | EARLY DETECTION AND PROGNOSIS OF COLON CANCERS |
| Orexo AB, SE | ***A 61K 9/14*** | EP 1845946* | PHARMACEUTICAL COMPOSITIONS USEFUL IN THE TRANSMUCOSAL ADMINISTRATION OF DRUGS |

| (71) | (51) | Broj objave evropske prijave patenta | (54) |
|---|---|---|---|
| Oxagen Limited, GB | ***C 07D 401/06***<br>***A 61K 31/4709***<br>***A 61P 11/06*** | EP 1856094* | MICROCRYSTALLINE (5-FLUORO-2-METHYL-3-QUINOLIN-2-YLMETHYL-INDOL-1-YL)ACETIC ACID |
| PainCeptor Pharma Corp., CA | ***A 61K 31/4709***<br>***A 61P 25/00***<br>***A 61P 29/00***<br>***A 61K 31/49*** | EP 1734962* | COMPOSITIONS AND METHODS FOR MODULATING GATED ION CHANNELS |
| Pajor, HU | G 07F 17/32<br>G 07G 1/00 | EP 1763854* | APPARATUS FOR DECREASING THE CIRCULATION OF MONEY OF SMALL DENOMINATIONS, ARRANGEMENT AND METHOD FOR DRAWING LOTS |
| Palau Pharma, ES | ***C 07D 209/46***<br>***C 07C 233/65***<br>***A 61K 31/4035***<br>***A 61K 31/165*** | EP 1917241* | BICYCLIC DERIVATIVES AS P38 KINASE INHIBITORS |
| Panacos Pharmaceuticals, US | ***C 07J 63/00***<br>***A 61K 31/56***<br>***A 61P 31/18***<br>***C 07J 53/00*** | EP 1828223* | NOVEL BETULIN DERIVATIVES, PREPARATION THEREOF AND USE THEREOF |
| Pangaea Biotech, ES | ***C 12Q 1/68*** | EP 1818413 | Method of determining outcome of non small-cell lung cancer according to XRCC3 polymorphism |
| Pangaea Biotech, ES | ***C 12Q 1/68***<br>***A 61K 31/337*** | EP 2004854* | METHOD OF PREDICTING SURVIVAL OF A NON-SMALL-CELL LUNG CANCER PATIENT TO A CHEMOTHERAPEUTIC TREATMENT |
| Pfizer Products Inc., US | C 07D 403/12<br>A 61K 31/505<br>A 61P 35/00 | EP 1751143* | PYRIMIDINE DERIVATIVES FOR THE TREATMENT OF ABNORMAL CELL GROWTH |
| Pharmacopeia, US | ***C 07D 307/52***<br>***A 61K 31/341***<br>***A 61K 31/40***<br>***A 61P 29/00***<br>***A 61P 35/00*** | EP 2041107* | 3,4-DI-SUBSTITUTED CYCLOBUTENE-1,2-DIONES AS CXC-CHEMOKINE RECEPTOR LIGANDS |
| Philip Morris Products S.A., CH | ***A 24B 15/28***<br>***A 24D 1/00*** | EP 1931224* | FLAVOURED CIGARETTE |
| Pipe Networks Ltd, AU | H 04L 29/06<br>H 04L 9/32<br>H 04L 12/28 | EP 1757012* | RE-ROUTING METHOD AND SYSTEM |
| Plastivit, ES | ***B 65D 41/34*** | EP 1829790 | NON-REFILLABLE CAP FOR BOTTLES CONTAINING ALCOHOL AND SIMILAR |
| PLIVA HRVATSKA d.o.o., HR | ***C 07D 211/32***<br>***C 07C 225/18***<br>***G 01N 30/02***<br>***G 01N 30/90***<br>***G 01N 33/15***<br>***A 61K 31/445*** | EP 2027089* | IMPURITIES OF DONEPEZIL |
| Quintessence Biosciences, US | ***A 61K 38/43***<br>***A 61K 38/46***<br>***A 61P 35/04***<br>***C 12N 9/00***<br>***C 12N 9/22*** | EP 2049151* | METHODS AND COMPOSITIONS FOR THE TREATMENT OF CANCER |
| R.J. REYNOLDS TOBACCO COMPANY, US | ***A 24B 15/16***<br>***A 24F 47/00***<br>***G 01N 30/72***<br>***G 01N 30/10*** | EP 1781125* | ULTRA-FINE PARTICLE CATALYSTS FOR CARBONACEOUS FUEL ELEMENTS |

| (71) | (51) | Broj objave evropske prijave patenta | (54) |
|---|---|---|---|
| Ranbaxy Laboratories Limited, IN | ***C 07D 413/04*** | EP 1891060* | 3-INDAZOLYL-ISOXAZOLINE DERIVATIVES AS INHIBITORS OF PHOSPHODIESTERASE TYPE-IV |
| Reddy,US; | ***A 61F 6/04*** | EP 1807029* | MALE STIMULATING CONTRACEPTIVES |
| Redpoint Bio Corporation, US | ***A 23L 1/229***<br>***A 23L 1/237***<br>***A 23L 1/227***<br>***A 61K 33/00***<br>***A 23L 1/22***<br>***A 61K 33/14*** | EP 1898708* | COMPOSITIONS AND METHODS FOR PRODUCING A SALTY TASTE IN FOODS OR BEVERAGES |
| Redpoint Bio Corporation, US | ***A 23L 1/22***<br>***A 23L 1/227***<br>***A 23L 1/29***<br>***A 23L 1/237*** | EP 1909597* | COMPOSITIONS AND METHODS FOR PRODUCING FLAVORED SEASONINGS THAT CONTAIN REDUCED QUANTITIES OF COMMON SALT |
| Redpoint Bio Corporation, US | ***A 01N 43/78*** | EP 2061321* | HETEROCYCLIC COMPOUNDS AS SWEETENER ENHANCERS |
| REGENTS OF THE UNIVERSITY OF MINNESOTA, US | A 61K 35/48<br>A 61K 48/00<br>A 61P 1/16 | EP 1694345* | COMPOSITIONS AND METHODS FOR THE TREATMENT OF LYSOSOMAL STORAGE DISORDERS |
| RESEARCH IN MOTION LIMITED, CA | G 06F 12/14<br>G 06F 11/36<br>G 06F 1/00 | EP 1711897* | DEBUGGING PORT SECURITY INTERFACE |
| RESEARCH IN MOTION LIMITED, CA | ***G 06F 9/46***<br>***G 06F 9/44***<br>***G 06F 9/45*** | EP 1712994 | System and method for transformation of an application definition |
| RESEARCH IN MOTION LIMITED, CA | G 06F 3/14<br>G 06F 17/30 | EP 1723505* | RESTRICTED USER INTERFACE NAVIGATION |
| RESEARCH IN MOTION LIMITED, CA | ***G 06F 3/033*** | EP 1818773 | Lockable keyboard for a handheld communication device |
| RESEARCH IN MOTION LIMITED, CA | ***G 06F 3/033*** | EP 1818774 | Lockable keyboard for a handheld communication device having a full alphabetic keyboard |
| RESEARCH IN MOTION LIMITED, CA | ***G 06F 3/033*** | EP 1818775 | Lockable keyboard for a wireless handheld communication device |
| RESEARCH IN MOTION LIMITED, CA | ***G 06F 3/033*** | EP 1818776 | Lockable keyboard for a handheld communication device having a reduced alphabetic keyboard |
| RESEARCH IN MOTION LIMITED, CA | ***G 06F 21/20*** | EP 1852801 | Updating certificate status in a system and method for processing certificates located in a certificate search |
| RESEARCH IN MOTION LIMITED, CA | ***G 06F 9/44***<br>***G 06F 17/30***<br>***H 03M 7/30*** | EP 1872205* | SYSTEM AND METHOD FOR EFFICIENT HOSTING OF WIRELESS APPLICATIONS BY ENCODING APPLICATION COMPONENT DEFINITIONS |
| RESEARCH IN MOTION LIMITED, CA | ***H 04L 12/16***<br>***H 04Q 7/34***<br>***H 04Q 7/22***<br>***H 04L 12/66*** | EP 1872526* | SYSTEM AND METHOD FOR CUSTOMIZING SERVICES FOR APPLICATIONS |
| RESEARCH IN MOTION LIMITED, CA | ***G 06F 21/20*** | EP 1930835 | System and method for locking and unlocking access to an electronic device |
| RESEARCH IN MOTION LIMITED, CA | ***H 04L 12/58***<br>***H 04L 29/06*** | EP 2040426 | System and method for controlling message attachment handling functions on a mobile device |
| RESEARCH IN MOTION LIMITED, CA | ***G 06Q 10/00*** | EP 2169600 | Method and apparatus for controlling an electronic device |

| (71) | (51) | Broj objave evropske prijave patenta | (54) |
|---|---|---|---|
| RESEARCH IN MOTION LIMITED, CA | ***G 06Q 10/00*** | EP 2199957 | Method and system for coordinating data records across a plurality of computing devices |
| RESEARCH IN MOTION LIMITED, CA | ***G 06F 3/023***<br>***G 06F 3/048*** | EP 2259167 | System and method for applying a text prediction algorithm to a virtual keyboard |
| Revert, FR | ***B 01J 20/26***<br>***C 08L 33/06***<br>***C 09K 3/00*** | EP 1982760 | Pulverulent composition for absorbing aqueous liquids |
| Rho, KR | ***B 65D 51/22*** | EP 1828002* | VESSEL CAP AND SYSTEM FOR MANUFACTURING THE SAME |
| Richter Gedeon Nyrt., HU | ***C 07D 495/04*** | EP 2010545* | A PROCESS FOR THE PREPARATION OF POLYMORPH FORM I OF (S)-(+)-METHYL-ALPHA-(2-CHLOROPHENYL)-6,7-DIHYDRO-THIENO-[3,2-C]PYRIDINE-5(4H)-ACETATE HYDROGEN SULFATE |
| Rostron,US; | ***G 01R 15/14***<br>***H 02G 1/02*** | EP 1761786* | ELECTRIC POWER MONITORING AND RESPONSE SYSTEM |
| Rutgers,US; | ***A 61K 31/353***<br>***C 07D 305/14***<br>***A 61K 31/216***<br>***A 61P 35/00***<br>***A 61K 36/53*** | EP 1744744* | BIOACTIVE COMPOUNDS AND METHODS OF USES THEREOF |
| Sanchez Duque, ES | ***H 05B 3/26*** | EP 2081413 | HEATING PLATE AND METHOD FOR MANUFACTURING IT |
| Sanofi-Aventis, FR | ***C 07D 401/14***<br>***A 61K 31/506***<br>***A 61P 3/10***<br>***A 61P 35/00***<br>***A 61P 29/00*** | EP 2108016* | 2-ANILINO-4-HETEROARYL PYRIMIDINE DERIVATIVES, AND PREPARATION THEREOF AS MEDICAMENTS, PHARMACEUTICAL COMPOSITIONS, AND IN PARTICULAR IKK INHIBITORS |
| Schering Corporation, US | ***A 61K 45/00***<br>***A 61K 31/713***<br>***A 61K 39/395***<br>***A 61P 35/00*** | EP 1768699* | INDUCTION OF APOPTOSIS IN TOLL-LIKE RECEPTOR EXPRESSING TUMOR CELLS |
| Schering Corporation, US | ***A 61K 31/496***<br>***C 07D 401/14***<br>***A 61P 35/00*** | EP 1833481* | FARNESYL PROTEIN TRANSFERASE INHIBITORS AND METHODS FOR TREATING PROLIFERATIVE DISEASES |
| Schering Corporation, US | ***C 07D 401/06*** | EP 1836190* | PREPARATION OF PHARMACEUTICAL SALTS OF PIPERAZINE COMPOUNDS |
| Schering Corporation, US | ***C 07D 221/16***<br>***C 07D 401/04***<br>***C 07D 401/14***<br>***A 61K 31/495***<br>***A 61P 35/00*** | EP 1973882* | PIPERAZINE DERIVATIVES AS FARNESYL PROTEIN TRANSFERASE INHIBITORS |
| Schering Corporation,US; | ***C 07D 307/52***<br>***A 61K 31/341***<br>***A 61K 31/40***<br>***A 61P 29/00***<br>***A 61P 35/00*** | EP 2041107* | 3,4-DI-SUBSTITUTED CYCLOBUTENE-1,2-DIONES AS CXC-CHEMOKINE RECEPTOR LIGANDS |
| Schreder, BE | ***F 21S 8/08***<br>***F 21V 19/00***<br>***H 05K 1/18***<br>***F 21Y 101/02*** | EP 2133622 | Street lighting apparatus with multiple LED-light sources |

| (71) | (51) | Broj objave evropske prijave patenta | (54) |
|---|---|---|---|
| SEPRACOR, US | A 61K 31/343<br>A 61P 25/06 | EP 1720541* | TREATMENT OR PROPHYLAXIS OF MIGRAINE OR HEADACHE DISORDERS USING CITALOPRAM, ESCITALOPRAM OR CITALOPRAM METABOLITES |
| SIGMA-TAU,IT; | A 61K 47/48<br>A 61P 35/00<br>A 61P 35/04<br>A 61P 33/00<br>A 61P 31/12 | EP 1747019* | CAMPTOTHECIN DERIVATIVES CONJUGATED IN POSITION 20 WITH INTEGRIN ANTAGONISTS |
| Soroka, DK | ***A 61K 38/17***<br>***A 61K 38/08***<br>***A 61K 38/10***<br>***A 61K 39/395***<br>***A 61P 9/10***<br>***A 61P 25/28***<br>***A 61P 35/00*** | EP 2167113* | NEUROPLASTIN DERIVED PEPTIDES |
| SOUTHWEST RESEARCH INSTITUTE, US | ***F 01N 3/20***<br>***F 01N 11/00***<br>***B 01D 53/94***<br>***G 07C 5/00***<br>***B 60R 16/023*** | EP 2017442 | Adaptive reductant dosing and emission control strategies |
| SSI Power LLC,US; | ***G 01R 15/14***<br>***H 02G 1/02*** | EP 1761786* | ELECTRIC POWER MONITORING AND RESPONSE SYSTEM |
| Studio Moderna SA, CH | ***B 62K 15/00***<br>***F 16B 7/22*** | EP 1812281* | RELEASABLE SECURING APPARATUS AND METHOD OF USING SAME |
| Symphogen A/S, DK | C 07K 14/705<br>C 07K 14/71<br>C 07K 14/715<br>A 61K 38/04 | EP 1745073* | CELL SURFACE RECEPTOR ISOFORMS AND METHODS OF IDENTIFYING AND USING THE SAME |
| Telefonaktiebolaget LM Ericsson (publ), SE | ***G 06F 9/445*** | EP 2140349* | UPGRADING SERVICES ASSOCIATED WITH HIGH AVAILABILITY SYSTEMS |
| Teva Pharmaceutical Industries Ltd, IL | A 61K 9/50<br>A 61K 31/4439 | EP 1720527* | A STABLE PHARMACEUTICAL COMPOSITION COMPRISING AN ACID LABILE DRUG |
| Teva Pharmaceutical Industries Ltd, IL | ***A 61K 9/16***<br>***A 61K 9/20***<br>***A 61K 31/13*** | EP 1886670 | Pharmaceutical compositions of memantine |
| TEVA PHARMACEUTICAL INDUSTRIES, IL | ***C 07D 417/12***<br>***A 61K 9/20***<br>***A 61K 31/4439***<br>***A 61P 3/10***<br>***A 61J 1/03*** | EP 1854794 | 2-N-{5-[[4-[2-(methyl-2-pyridinylamino) ethoxy] phenyl]methyl]-2-4-thiazolidinedione} butanedioic acid, methods of preparation and compositions with rosiglitazone maleate |
| The Johns Hopkins University,US; | ***C 12Q 1/68***<br>***C 12P 19/34***<br>***C 07H 21/04*** | EP 2046994* | EARLY DETECTION AND PROGNOSIS OF COLON CANCERS |
| The Regents of University of Minnesota,US; | ***A 61K 31/353***<br>***C 07D 305/14***<br>***A 61K 31/216***<br>***A 61P 35/00***<br>***A 61K 36/53*** | EP 1744744* | BIOACTIVE COMPOUNDS AND METHODS OF USES THEREOF |

| (71) | (51) | Broj objave evropske prijave patenta | (54) |
|---|---|---|---|
| The Research Foundation of the State University of, US | ***C 12N 15/12***<br>***C 12N 15/63***<br>***C 07K 14/705***<br>***C 12N 5/10***<br>***A 61K 31/713***<br>***A 61K 35/12***<br>***A 61K 38/17***<br>***C 12P 21/02*** | EP 1931783* | CHIMERIC HCN CHANNELS |
| The Trustees of Columbia University in the City of,US; | ***C 12N 15/12***<br>***C 12N 15/63***<br>***C 07K 14/705***<br>***C 12N 5/10***<br>***A 61K 31/713***<br>***A 61K 35/12***<br>***A 61K 38/17***<br>***C 12P 21/02*** | EP 1931783* | CHIMERIC HCN CHANNELS |
| THE UNIVERSITY OF GEORGIA RESEARCH FOUNDATION, US | A 01N 43/04<br>A 61K 31/70 | EP 1742534* | GLUCOSAMINE AND GLUCOSAMINE/ANTI-INFLAMMATORY MUTUAL PRODRUGS, COMPOSITIONS, AND METHODS |
| The University of Hong Kong, CN | ***C 07D 493/10***<br>***C 07D 403/06***<br>***C 07F 5/02***<br>***C 07C 49/213***<br>***G 01N 31/22***<br>***C 07D 207/34*** | EP 1943254* | REAGENTS FOR HIGHLY SPECIFIC DETECTION OF PEROXYNITRITE |
| Toxogen GmbH,DE; | ***C 07K 14/195***<br>***C 07K 14/33***<br>***A 61K 38/00*** | EP 1874803* | CARRIER FOR TARGETING NERVE CELLS |
| Trialstat Corporation, CA | ***G 06F 17/30*** | EP 1657655 | Method, system and computer program product for reference categorization and/or reference particulars mining |
| U.S. Nutraceuticals LLC dba Valensa International, US | ***A 23L 1/30*** | EP 1981361* | DIETARY SUPPLEMENT COMPOSITION FOR BLOOD LIPID HEALTH |
| UNIVERSIDADE DE SANTIAGO DE COMPOSTELA, ES | ***C 07D 333/54***<br>***C 07D 333/56***<br>***C 07C 62/26***<br>***C 07C 62/38***<br>***A 61K 31/381***<br>***A 61K 31/19***<br>***A 61P 31/00*** | EP 2202230 | Competitive inhibitors of type ii dehydroquinase enzyme |
| UNIVERSITY OF VIRGINIA PATENT FOUNDATION, US | ***A 61K 31/133***<br>***A 61K 31/661***<br>***A 61P 25/02*** | EP 1986623* | METHOD FOR TREATMENT OF NEUROPATHIC PAIN |
| USV Limited, IN | ***C 07C 315/02***<br>***C 07C 315/06***<br>***C 07D 317/46*** | EP 1863759* | PROCESS FOR PREPARATION OF BICALUTAMIDE |
| Van Halderen, ZA | ***B 32B 33/00***<br>***B 32B 27/12*** | EP 1896258* | MATERIAL AND JOINT FOR A SHELTER |
| Wanless,CA; | ***H 04L 12/66***<br>***H 04L 12/54***<br>***H 04L 29/06***<br>***H 04M 11/06***<br>***H 04Q 3/64***<br>***H 04Q 7/38*** | EP 2005680* | A METHOD AND SYSTEM FOR SMART ROUTE DIALLING TO A DESTINATION IDENTIFIER USING A TELEPHONE |

| (71) | (51) | Broj objave evropske prijave patenta | (54) |
|---|---|---|---|
| Washington Biotech Corp., US | ***A 61M 31/00***<br>***A 61M 5/30***<br>***A 61M 5/00***<br>***A 61M 5/20*** | EP 1904145* | METHOD AND APPARATUS FOR DELIVERING EPINEPHRINE |
| WatchGuard Technologies, US | ***H 04L 12/24*** | EP 2027677* | EMAIL SERVER SYSTEM AND METHOD |
| WAYNE-DALTON CORP., US | ***G 07C 9/00***<br>***E 05F 15/00*** | EP 1917647* | SYSTEM AND METHODS FOR AUTOMATICALLY MOVING ACCESS BARRIERS INITIATED BY MOBILE TRANSMITTER DEVICES |
| Wellgen, US | ***A 61K 31/353***<br>***C 07D 305/14***<br>***A 61K 31/216***<br>***A 61P 35/00***<br>***A 61K 36/53*** | EP 1744744* | BIOACTIVE COMPOUNDS AND METHODS OF USES THEREOF |
| Willmore, US | ***H 04B 1/38***<br>***H 04M 1/00*** | EP 1805901* | WIRELESS INTERACTIVE MULTI-USER DISPLAY SYSTEM AND METHOD |
| WM International Limited, BS | ***C 02F 1/00*** | EP 1893533* | APPARATUS AND METHOD FOR THE NON-CHEMICAL STABILIZATION OF BIO-SOLIDS |
| Wyeth LLC, US | ***C 07D 493/22*** | EP 2044081* | IMPROVED OXIDATION PROCESS WITH ENHANCED SAFETY USEFUL IN THE MANUFACTURE OF MOXIDECTIN BY MEANS OF STABILISED 2-IODOXYBENZOIC ACID (SIBX) |
| XTL Biopharmaceuticals Limited, US | ***A 61K 31/4155***<br>***C 07D 231/12*** | EP 1853257* | PYRAZOLE COMPOUNDS |
| Xtranormal Technologie Inc., CA | ***G 06F 17/27***<br>***G 06F 19/00***<br>***G 06T 13/00***<br>***G 06T 15/70*** | EP 2165271* | TIME-ORDERED TEMPLATES FOR TEXT-TO-ANIMATION SYSTEM |
| Xtranormal Technologie Inc., CA | ***G 06T 13/00***<br>***G 06F 17/10***<br>***G 06T 15/70*** | EP 2179401* | MODELING THE MOTION OF AN ARTICULATED OBJECT |
| YM Biosciences Inc., CA | A 61K 9/127 | EP 1689364* | STABLE LIPOSOME COMPOSITIONS COMPRISING LIPOPHILIC AMINE CONTAINING PHARMACEUTICAL AGENTS |
| Z F Group North American Operations,US; | ***F 16C 11/00*** | EP 2007992* | COMBINATION CYLINDRICAL AND SPHERICAL JOINT |

ИНДЕКС ОБЈАВЉЕНИХ ПОВУЧЕНИХ ЗАХТЕВА ЗА ПРОШИРЕЊЕ ЕВРОПСКИХ ПРИЈАВА ПАТЕНАТА ПРЕМА КЛАСИФИКАЦИОНОЈ ОЗНАЦИ ПО МЕЂУНАРОДНОЈ КЛАСИФИКАЦИЈИ ПАТЕНАТА

| (51) | Broj objave evropske prijave patenta | (51) |
|---|---|---|
| ***A 01D 34/53*** | EP 2020843* | SHREDDER DEVICE, IN PARTICULAR FOR AGRICULTURAL MACHINES |
| ***A 01F 29/01*** | EP 2020843* | SHREDDER DEVICE, IN PARTICULAR FOR AGRICULTURAL MACHINES |
| ***A 01F 29/04*** | EP 2020843* | SHREDDER DEVICE, IN PARTICULAR FOR AGRICULTURAL MACHINES |
| ***A 01K 13/00*** | EP 2130430 | Cleaning device for dog claws |
| ***A 01K 67/027*** | EP 2186402 | Knock-out animal models for novel genes and methods of use |
| A 01N 25/28 | EP 1755384* | MICROCAPSULES HAVING ACTIVATED RELEASE OF CORE MATERIAL THEREIN |
| ***A 01N 35/04*** | EP 1879454* | PESTICIDAL SUBSTITUTED PHENYLETHERS |
| A 01N 43/04 | EP 1742534* | GLUCOSAMINE AND GLUCOSAMINE/ANTI-INFLAMMATORY MUTUAL PRODRUGS, COMPOSITIONS, AND METHODS |
| ***A 01N 43/78*** | EP 2061321* | HETEROCYCLIC COMPOUNDS AS SWEETENER ENHANCERS |
| ***A 01N 47/40*** | EP 2096925* | PESTICIDE COMPOSITION COMPRISING FOSETYL-ALUMINIUM AND AN INSECTICIDE ACTIVE SUBSTANCE |
| ***A 01N 51/00*** | EP 2096925* | PESTICIDE COMPOSITION COMPRISING FOSETYL-ALUMINIUM AND AN INSECTICIDE ACTIVE SUBSTANCE |
| ***A 01N 57/12*** | EP 2096925* | PESTICIDE COMPOSITION COMPRISING FOSETYL-ALUMINIUM AND AN INSECTICIDE ACTIVE SUBSTANCE |
| ***A 01N 59/06*** | EP 2096925* | PESTICIDE COMPOSITION COMPRISING FOSETYL-ALUMINIUM AND AN INSECTICIDE ACTIVE SUBSTANCE |
| ***A 01P 3/00*** | EP 2096925* | PESTICIDE COMPOSITION COMPRISING FOSETYL-ALUMINIUM AND AN INSECTICIDE ACTIVE SUBSTANCE |
| ***A 01P 7/04*** | EP 2096925* | PESTICIDE COMPOSITION COMPRISING FOSETYL-ALUMINIUM AND AN INSECTICIDE ACTIVE SUBSTANCE |
| ***A 23C 9/16*** | EP 1981356* | IMPROVEMENT OF COLD LIQUID SOLUBILITY OF FAT-CONTAINING POWDERS |
| ***A 23C 11/10*** | EP 2052623 | Method and facility for continuous manufacture of foodstuffs made of pulses |
| ***A 23D 9/05*** | EP 1981356* | IMPROVEMENT OF COLD LIQUID SOLUBILITY OF FAT-CONTAINING POWDERS |
| A 23J 1/12 | EP 1734834* | IMPROVED DISTILLATION PROCESS |
| ***A 23J 3/16*** | EP 2052623 | Method and facility for continuous manufacture of foodstuffs made of pulses |
| ***A 23L 1/00*** | EP 1981356* | IMPROVEMENT OF COLD LIQUID SOLUBILITY OF FAT-CONTAINING POWDERS |
| A 23L 1/05 | EP 1734834* | IMPROVED DISTILLATION PROCESS |
| ***A 23L 1/22*** | EP 1898708* | COMPOSITIONS AND METHODS FOR PRODUCING A SALTY TASTE IN FOODS OR BEVERAGES |
| ***A 23L 1/22*** | EP 1909597* | COMPOSITIONS AND METHODS FOR PRODUCING FLAVORED SEASONINGS THAT CONTAIN REDUCED QUANTITIES OF COMMON SALT |
| ***A 23L 1/227*** | EP 1898708* | COMPOSITIONS AND METHODS FOR PRODUCING A SALTY TASTE IN FOODS OR BEVERAGES |
| ***A 23L 1/227*** | EP 1909597* | COMPOSITIONS AND METHODS FOR PRODUCING FLAVORED SEASONINGS THAT CONTAIN REDUCED QUANTITIES OF COMMON SALT |
| ***A 23L 1/229*** | EP 1898708* | COMPOSITIONS AND METHODS FOR PRODUCING A SALTY TASTE IN FOODS OR BEVERAGES |
| ***A 23L 1/237*** | EP 1898708* | COMPOSITIONS AND METHODS FOR PRODUCING A SALTY TASTE IN FOODS OR BEVERAGES |

| (51) | Broj objave evropske prijave patenta | (51) |
|---|---|---|
| ***A 23L 1/237*** | EP 1909597* | COMPOSITIONS AND METHODS FOR PRODUCING FLAVORED SEASONINGS THAT CONTAIN REDUCED QUANTITIES OF COMMON SALT |
| ***A 23L 1/29*** | EP 1909597* | COMPOSITIONS AND METHODS FOR PRODUCING FLAVORED SEASONINGS THAT CONTAIN REDUCED QUANTITIES OF COMMON SALT |
| ***A 23L 1/30*** | EP 1981361* | DIETARY SUPPLEMENT COMPOSITION FOR BLOOD LIPID HEALTH |
| ***A 24B 15/16*** | EP 1781125* | ULTRA-FINE PARTICLE CATALYSTS FOR CARBONACEOUS FUEL ELEMENTS |
| ***A 24B 15/28*** | EP 1931224* | FLAVOURED CIGARETTE |
| ***A 24D 1/00*** | EP 1931224* | FLAVOURED CIGARETTE |
| ***A 24F 47/00*** | EP 1781125* | ULTRA-FINE PARTICLE CATALYSTS FOR CARBONACEOUS FUEL ELEMENTS |
| ***A 41D 13/00*** | EP 1896649* | LIQUID IMPERMEABLE MATERIAL |
| ***A 41D 19/00*** | EP 1896649* | LIQUID IMPERMEABLE MATERIAL |
| ***A 41D 27/02*** | EP 1896649* | LIQUID IMPERMEABLE MATERIAL |
| ***A 43B 1/00*** | EP 1896649* | LIQUID IMPERMEABLE MATERIAL |
| ***A 47K 10/32*** | EP 2133104 | Core for Rolls |
| ***A 47K 13/24*** | EP 2148603* | TOILET SEAT PROVIDED WITH BODY WEIGHT METER |
| ***A 47L 15/42*** | EP 1980193 | Method for cleaning the filter of a dishwasher and dishwasher for carrying out the same |
| ***A 61C 9/00*** | EP 1887964* | DENTAL MODELING ASSEMBLY AND METHODS |
| ***A 61C 13/00*** | EP 1887964* | DENTAL MODELING ASSEMBLY AND METHODS |
| ***A 61C 13/34*** | EP 1887964* | DENTAL MODELING ASSEMBLY AND METHODS |
| ***A 61F 2/44*** | EP 2015710* | IMPLANTING A TISSUE PROSTHESIS |
| ***A 61F 2/44*** | EP 2020962* | A TISSUE PROSTHESIS |
| ***A 61F 6/04*** | EP 1807029* | MALE STIMULATING CONTRACEPTIVES |
| ***A 61F 13/00*** | EP 1896649* | LIQUID IMPERMEABLE MATERIAL |
| ***A 61J 1/00*** | EP 1877023* | DISPENSING DEVICE |
| ***A 61J 1/03*** | EP 1854794 | 2-N-{5-[[4-[2-(methyl-2-pyridinylamino) ethoxy] phenyl]methyl]-2-4-thiazolidinedione} butanedioic acid, methods of preparation and compositions with rosiglitazone maleate |
| ***A 61K 8/26*** | EP 1962777* | IMPROVED LONG-TERM EFFECT OF ANTIPERSPIRANTS |
| ***A 61K 8/34*** | EP 1962777* | IMPROVED LONG-TERM EFFECT OF ANTIPERSPIRANTS |
| ***A 61K 8/37*** | EP 1962777* | IMPROVED LONG-TERM EFFECT OF ANTIPERSPIRANTS |
| A 61K 9/00 | EP 1720577* | CICLESONIDE AND GLYCOPYRRONIUM COMBINATION |
| ***A 61K 9/00*** | EP 1888030* | PEDIATRIC FORMULATION OF TOPIRAMATE |
| ***A 61K 9/08*** | EP 1888030* | PEDIATRIC FORMULATION OF TOPIRAMATE |
| ***A 61K 9/10*** | EP 1806129 | COMPOSITION CONTAINING FINE PARTICLES AND PROCESS FOR PRODUCING THE SAME |
| A 61K 9/127 | EP 1689364* | STABLE LIPOSOME COMPOSITIONS COMPRISING LIPOPHILIC AMINE CONTAINING PHARMACEUTICAL AGENTS |
| ***A 61K 9/14*** | EP 1806129 | COMPOSITION CONTAINING FINE PARTICLES AND PROCESS FOR PRODUCING THE SAME |
| ***A 61K 9/14*** | EP 1845946* | PHARMACEUTICAL COMPOSITIONS USEFUL IN THE TRANSMUCOSAL ADMINISTRATION OF DRUGS |
| ***A 61K 9/16*** | EP 1806129 | COMPOSITION CONTAINING FINE PARTICLES AND PROCESS FOR PRODUCING THE SAME |
| ***A 61K 9/16*** | EP 1886670 | Pharmaceutical compositions of memantine |
| ***A 61K 9/20*** | EP 1806129 | COMPOSITION CONTAINING FINE PARTICLES AND PROCESS FOR PRODUCING THE SAME |
| ***A 61K 9/20*** | EP 1854794 | 2-N-{5-[[4-[2-(methyl-2-pyridinylamino) ethoxy] phenyl]methyl]-2-4-thiazolidinedione} butanedioic acid, methods of preparation and compositions with rosiglitazone maleate |
| ***A 61K 9/20*** | EP 1886670 | Pharmaceutical compositions of memantine |
| ***A 61K 9/20*** | EP 2079449* | PHENYLALKYLAMINO CARBAMATE COMPOSITIONS |
| ***A 61K 9/20*** | EP 2089002* | PHENYLALKYL CARBAMATE COMPOSITIONS |
| ***A 61K 9/26*** | EP 1894560 | Oral antimicrobial pharmaceutical compositions comprising metronidazole |

| (51) | Broj objave evropske prijave patenta | (51) |
|---|---|---|
| ***A 61K 9/32*** | EP 1894560 | Oral antimicrobial pharmaceutical compositions comprising metronidazole |
| ***A 61K 9/44*** | EP 1884233 | METHOD OF MARKING COMPOSITION FOR ORAL ADMINISTRATION |
| ***A 61K 9/48*** | EP 1806129 | COMPOSITION CONTAINING FINE PARTICLES AND PROCESS FOR PRODUCING THE SAME |
| A 61K 9/50 | EP 1720527* | A STABLE PHARMACEUTICAL COMPOSITION COMPRISING AN ACID LABILE DRUG |
| A 61K 31/00 | EP 1705988* | IMMUNOMODULATORY COMPOUNDS FOR THE TREATMENT OF CENTRAL NERVOUS SYSTEM DISORDERS |
| ***A 61K 31/13*** | EP 1886670 | Pharmaceutical compositions of memantine |
| ***A 61K 31/133*** | EP 1986623* | METHOD FOR TREATMENT OF NEUROPATHIC PAIN |
| ***A 61K 31/165*** | EP 1917241* | BICYCLIC DERIVATIVES AS P38 KINASE INHIBITORS |
| ***A 61K 31/19*** | EP 2202230 | Competitive inhibitors of type ii dehydroquinase enzyme |
| ***A 61K 31/194*** | EP 1915334* | NOVEL SALTS OF FUMARIC ACID MONOALKYLESTERS AND THEIR PHARMACEUTICAL USE |
| ***A 61K 31/195*** | EP 1915334* | NOVEL SALTS OF FUMARIC ACID MONOALKYLESTERS AND THEIR PHARMACEUTICAL USE |
| ***A 61K 31/196*** | EP 1824469* | A METHOD OF MODULATING B CELL FUNCTIONING |
| ***A 61K 31/198*** | EP 1824469* | A METHOD OF MODULATING B CELL FUNCTIONING |
| ***A 61K 31/216*** | EP 1744744* | BIOACTIVE COMPOUNDS AND METHODS OF USES THEREOF |
| ***A 61K 31/277*** | EP 2314292 | Endoparasiticidal compositions |
| ***A 61K 31/325*** | EP 2079449* | PHENYLALKYLAMINO CARBAMATE COMPOSITIONS |
| ***A 61K 31/325*** | EP 2089002* | PHENYLALKYL CARBAMATE COMPOSITIONS |
| ***A 61K 31/337*** | EP 2004854* | METHOD OF PREDICTING SURVIVAL OF A NON-SMALL-CELL LUNG CANCER PATIENT TO A CHEMOTHERAPEUTIC TREATMENT |
| ***A 61K 31/341*** | EP 2041107* | 3,4-DI-SUBSTITUTED CYCLOBUTENE-1,2-DIONES AS CXC-CHEMOKINE RECEPTOR LIGANDS |
| A 61K 31/343 | EP 1720541* | TREATMENT OR PROPHYLAXIS OF MIGRAINE OR HEADACHE DISORDERS USING CITALOPRAM, ESCITALOPRAM OR CITALOPRAM METABOLITES |
| ***A 61K 31/35*** | EP 1888030* | PEDIATRIC FORMULATION OF TOPIRAMATE |
| ***A 61K 31/353*** | EP 1744744* | BIOACTIVE COMPOUNDS AND METHODS OF USES THEREOF |
| ***A 61K 31/381*** | EP 2202230 | Competitive inhibitors of type ii dehydroquinase enzyme |
| ***A 61K 31/395*** | EP 1894560 | Oral antimicrobial pharmaceutical compositions comprising metronidazole |
| ***A 61K 31/40*** | EP 2041107* | 3,4-DI-SUBSTITUTED CYCLOBUTENE-1,2-DIONES AS CXC-CHEMOKINE RECEPTOR LIGANDS |
| A 61K 31/4015 | EP 1720577* | CICLESONIDE AND GLYCOPYRRONIUM COMBINATION |
| ***A 61K 31/4035*** | EP 1917241* | BICYCLIC DERIVATIVES AS P38 KINASE INHIBITORS |
| A 61K 31/404 | EP 1751134* | PYRIDINE DERIVATIVES OF ALKYL OXINDOLES AS 5-HT7 RECEPTOR ACTIVE AGENTS |
| ***A 61K 31/404*** | EP 1835908* | INDOLE DERIVATIVES WITH ANTITUMOR ACTIVITY |
| ***A 61K 31/404*** | EP 1841736* | INDOLES USEFUL IN THE TREATMENT OF INFLAMMATION |
| A 61K 31/407 | EP 1688420 | 5-5-MEMBERED FUSED HETEROCYCLIC COMPOUND AND USE THEREOF AS HCV POLYMERASE INHIBITOR |
| ***A 61K 31/4155*** | EP 1853257* | PYRAZOLE COMPOUNDS |
| ***A 61K 31/4155*** | EP 2027109* | 4- (2, 6-DICHLORO-BENZOYLAMINO) -1H-PYRAZOLE-S-CARBOXYLIC ACID (1-METHANESULPH0NYL-PIPERIDIN-4-YL) -AMIDE FOR THE TREATMENT OF CANCER |
| ***A 61K 31/416*** | EP 2176230* | TREATMENT OF DUCHENNE MUSCULAR DYSTROPHY |
| ***A 61K 31/4164*** | EP 1894560 | Oral antimicrobial pharmaceutical compositions comprising metronidazole |

| (51) | Broj objave evropske prijave patenta | (51) |
|---|---|---|
| ***A 61K 31/4184*** | EP 1891046* | POLYMORPHS OF ETHYL 3-[(2-{[4-(HEXYLOXYCARBONYLAMINO-IMINOMETHYL)PHENYLAMINO]METHYL}-1-METHYL-1H-BENZIMIDAZOLE-5-CARBONYL)PYRIDIN-2-YLAMINO]PROPIONATE |
| A 61K 31/4188 | EP 1688420 | 5-5-MEMBERED FUSED HETEROCYCLIC COMPOUND AND USE THEREOF AS HCV POLYMERASE INHIBITOR |
| ***A 61K 31/4196*** | EP 2019094 | HETEROCYCLIC TYPE CINNAMIDE DERIVATIVE |
| ***A 61K 31/424*** | EP 2134721* | ANTIMICROBIAL HETEROCYCLIC COMPOUNDS FOR TREATMENT OF BACTERIAL INFECTIONS |
| ***A 61K 31/427*** | EP 2044066* | CRYSTALLINE FORMS OF N-[5-[[[5-(1,1-DIMETHYLETHYL)-2-OXAZOLYL]METHYL] THIO]-2-THIAZOLYL]-4-PIPERIDINECARBOXAMIDE |
| A 61K 31/4365 | EP 1751134* | PYRIDINE DERIVATIVES OF ALKYL OXINDOLES AS 5-HT7 RECEPTOR ACTIVE AGENTS |
| ***A 61K 31/437*** | EP 2019094 | HETEROCYCLIC TYPE CINNAMIDE DERIVATIVE |
| ***A 61K 31/437*** | EP 2101768* | USE OF NEUROPROTECTIVE COMPOUNDS FOR OBTAINING DRUGS FOR TREATING NEURODEGENERATIVE DISEASES |
| ***A 61K 31/4375*** | EP 2019094 | HETEROCYCLIC TYPE CINNAMIDE DERIVATIVE |
| ***A 61K 31/44*** | EP 1824469* | A METHOD OF MODULATING B CELL FUNCTIONING |
| ***A 61K 31/44*** | EP 2034998* | 1,2,3,4-TETRAHYDRO-QUINOLINE DERIVATIVES AS CETP INHIBITORS |
| ***A 61K 31/4402*** | EP 1824469* | A METHOD OF MODULATING B CELL FUNCTIONING |
| ***A 61K 31/4402*** | EP 1891046* | POLYMORPHS OF ETHYL 3-[(2-{[4-(HEXYLOXYCARBONYLAMINO-IMINOMETHYL)PHENYLAMINO]METHYL}-1-METHYL-1H-BENZIMIDAZOLE-5-CARBONYL)PYRIDIN-2-YLAMINO]PROPIONATE |
| ***A 61K 31/4412*** | EP 2119706 | PYRIDINE OR PYRIMIDINE DERIVATIVE HAVING EXCELLENT CELL GROWTH INHIBITION EFFECT AND EXCELLENT ANTI-TUMOR EFFECT ON CELL STRAIN HAVING AMPLIFICATION OF HGFR GENE |
| ***A 61K 31/4412*** | EP 2167495* | SUBSTITUTED OXAZOLIDINONES AND THE USE THEREOF |
| ***A 61K 31/4427*** | EP 2119706 | PYRIDINE OR PYRIMIDINE DERIVATIVE HAVING EXCELLENT CELL GROWTH INHIBITION EFFECT AND EXCELLENT ANTI-TUMOR EFFECT ON CELL STRAIN HAVING AMPLIFICATION OF HGFR GENE |
| A 61K 31/4439 | EP 1720527* | A STABLE PHARMACEUTICAL COMPOSITION COMPRISING AN ACID LABILE DRUG |
| ***A 61K 31/4439*** | EP 1854794 | 2-N-{5-[[4-[2-(methyl-2-pyridinylamino) ethoxy] phenyl]methyl]-2-4-thiazolidinedione} butanedioic acid, methods of preparation and compositions with rosiglitazone maleate |
| ***A 61K 31/4439*** | EP 2065379 | BENZIMIDAZOLE COMPOUND HAVING GASTRIC ACID SECRETION INHIBITORY ACTIVITY |
| ***A 61K 31/4439*** | EP 2101768* | USE OF NEUROPROTECTIVE COMPOUNDS FOR OBTAINING DRUGS FOR TREATING NEURODEGENERATIVE DISEASES |
| ***A 61K 31/445*** | EP 2027089* | IMPURITIES OF DONEPEZIL |
| ***A 61K 31/445*** | EP 2164491* | PIPERIDINE-4-ACETIC ACID DERIVATIVES AND THEIR USE |
| ***A 61K 31/4468*** | EP 2164491* | PIPERIDINE-4-ACETIC ACID DERIVATIVES AND THEIR USE |
| ***A 61K 31/453*** | EP 2164491* | PIPERIDINE-4-ACETIC ACID DERIVATIVES AND THEIR USE |
| ***A 61K 31/4535*** | EP 2164491* | PIPERIDINE-4-ACETIC ACID DERIVATIVES AND THEIR USE |
| A 61K 31/454 | EP 1688420 | 5-5-MEMBERED FUSED HETEROCYCLIC COMPOUND AND USE THEREOF AS HCV POLYMERASE INHIBITOR |

| (51) | Broj objave evropske prijave patenta | (51) |
|---|---|---|
| A 61K 31/454 | EP 1705988* | IMMUNOMODULATORY COMPOUNDS FOR THE TREATMENT OF CENTRAL NERVOUS SYSTEM DISORDERS |
| A 61K 31/454 | EP 1751134* | PYRIDINE DERIVATIVES OF ALKYL OXINDOLES AS 5-HT7 RECEPTOR ACTIVE AGENTS |
| ***A 61K 31/454*** | EP 2019094 | HETEROCYCLIC TYPE CINNAMIDE DERIVATIVE |
| ***A 61K 31/4545*** | EP 2019094 | HETEROCYCLIC TYPE CINNAMIDE DERIVATIVE |
| ***A 61K 31/4545*** | EP 2164491* | PIPERIDINE-4-ACETIC ACID DERIVATIVES AND THEIR USE |
| ***A 61K 31/47*** | EP 1824469* | A METHOD OF MODULATING B CELL FUNCTIONING |
| ***A 61K 31/4709*** | EP 1734962* | COMPOSITIONS AND METHODS FOR MODULATING GATED ION CHANNELS |
| ***A 61K 31/4709*** | EP 1856094* | MICROCRYSTALLINE (5-FLUORO-2-METHYL-3-QUINOLIN-2-YLMETHYL-INDOL-1-YL)ACETIC ACID |
| A 61K 31/4745 | EP 1732925* | NOVEL N-(ALKOXYALKYL)CARBAMOYL- SUBSTITUTED 6-PHENYL-BENZONAPHTHYRIDINE DERIVATIVES AND THEIR USE AS PDE3/4 INHIBITORS |
| ***A 61K 31/49*** | EP 1734962* | COMPOSITIONS AND METHODS FOR MODULATING GATED ION CHANNELS |
| ***A 61K 31/495*** | EP 1892238 | 1, 2-DI(CYCLIC GROUP)SUBSTITUTED BENZENE DERIVATIVE |
| ***A 61K 31/495*** | EP 1973882* | PIPERAZINE DERIVATIVES AS FARNESYL PROTEIN TRANSFERASE INHIBITORS |
| A 61K 31/496 | EP 1688420 | 5-5-MEMBERED FUSED HETEROCYCLIC COMPOUND AND USE THEREOF AS HCV POLYMERASE INHIBITOR |
| A 61K 31/496 | EP 1723129* | 1-AKAN-2-OL SUBSTITUTED PIPERAZINE AND PIPERIDINE COMPOUNDS |
| A 61K 31/496 | EP 1742934* | PIPERIDINE DERIVATIVES AS MODULATORS OF CHEMOKINE RECEPTOR CCR5 |
| ***A 61K 31/496*** | EP 1833481* | FARNESYL PROTEIN TRANSFERASE INHIBITORS AND METHODS FOR TREATING PROLIFERATIVE DISEASES |
| ***A 61K 31/496*** | EP 1892238 | 1, 2-DI(CYCLIC GROUP)SUBSTITUTED BENZENE DERIVATIVE |
| ***A 61K 31/496*** | EP 2119706 | PYRIDINE OR PYRIMIDINE DERIVATIVE HAVING EXCELLENT CELL GROWTH INHIBITION EFFECT AND EXCELLENT ANTI-TUMOR EFFECT ON CELL STRAIN HAVING AMPLIFICATION OF HGFR GENE |
| ***A 61K 31/498*** | EP 1777225 | FUSED BENZAMIDE COMPOUND AND VANILLOID RECEPTOR 1 (VR1) ACTIVITY INHIBITOR |
| A 61K 31/505 | EP 1751143* | PYRIMIDINE DERIVATIVES FOR THE TREATMENT OF ABNORMAL CELL GROWTH |
| A 61K 31/506 | EP 1732919* | SUBSTITUTED THIOPHENE DERIVATIVES AS ANTI-CANCER AGENTS |
| ***A 61K 31/506*** | EP 2108016* | 2-ANILINO-4-HETEROARYL PYRIMIDINE DERIVATIVES, AND PREPARATION THEREOF AS MEDICAMENTS, PHARMACEUTICAL COMPOSITIONS, AND IN PARTICULAR IKK INHIBITORS |
| ***A 61K 31/506*** | EP 2119706 | PYRIDINE OR PYRIMIDINE DERIVATIVE HAVING EXCELLENT CELL GROWTH INHIBITION EFFECT AND EXCELLENT ANTI-TUMOR EFFECT ON CELL STRAIN HAVING AMPLIFICATION OF HGFR GENE |
| ***A 61K 31/519*** | EP 2139329* | NOVEL IMIDAZO BASED HETEROCYCLES |
| ***A 61K 31/52*** | EP 2212326* | 2-ANILINOPURIN-8-ONES AS INHIBITORS OF TTK/MPS1 FOR THE TREATMENT OF PROLIFERATIVE DISORDERS |
| A 61K 31/522 | EP 1738766 | PREVENTIVE AND/OR THERAPEUTIC AGENT FOR DISEASE ACCOMPANIED BY CHRONIC MUSCLE/SKELETON PAIN |
| ***A 61K 31/53*** | EP 1888590* | CRYSTALLINE FORMS OF A PYRROLOTRIAZINE COMPOUND |
| ***A 61K 31/535*** | EP 2023934* | 3,4-DIHYDRO-2H-BENZO[1,4]OXAZINE AND THIAZINE DERIVATIVES AS CETP INHIBITORS |

| (51) | Broj objave evropske prijave patenta | (51) |
|---|---|---|
| A 61K 31/5377 | EP 1688420 | 5-5-MEMBERED FUSED HETEROCYCLIC COMPOUND AND USE THEREOF AS HCV POLYMERASE INHIBITOR |
| ***A 61K 31/5377*** | EP 1892238 | 1, 2-DI(CYCLIC GROUP)SUBSTITUTED BENZENE DERIVATIVE |
| ***A 61K 31/5377*** | EP 2019094 | HETEROCYCLIC TYPE CINNAMIDE DERIVATIVE |
| ***A 61K 31/5377*** | EP 2119706 | PYRIDINE OR PYRIMIDINE DERIVATIVE HAVING EXCELLENT CELL GROWTH INHIBITION EFFECT AND EXCELLENT ANTI-TUMOR EFFECT ON CELL STRAIN HAVING AMPLIFICATION OF HGFR GENE |
| ***A 61K 31/538*** | EP 1777225 | FUSED BENZAMIDE COMPOUND AND VANILLOID RECEPTOR 1 (VR1) ACTIVITY INHIBITOR |
| ***A 61K 31/538*** | EP 1892238 | 1, 2-DI(CYCLIC GROUP)SUBSTITUTED BENZENE DERIVATIVE |
| ***A 61K 31/54*** | EP 1892238 | 1, 2-DI(CYCLIC GROUP)SUBSTITUTED BENZENE DERIVATIVE |
| A 61K 31/541 | EP 1750719* | TREATMENT OF DISEASES ASSOCIATED WITH ALTERED LEVEL OF AMYLOID BETA PEPTIDES |
| A 61K 31/549 | EP 1557412 | Fluorinated benzothiadiazine derivatives and their use as AMPA receptor modulators |
| ***A 61K 31/549*** | EP 2065379 | BENZIMIDAZOLE COMPOUND HAVING GASTRIC ACID SECRETION INHIBITORY ACTIVITY |
| ***A 61K 31/55*** | EP 1799224* | MEMANTINE FOR THE TREATMENT OF CHILDHOOD BEHAVIORAL DISORDERS |
| ***A 61K 31/55*** | EP 1844053* | ANTI-INFLAMMATORY MACROLIDE CONJUGATES |
| ***A 61K 31/55*** | EP 2314292 | Endoparasiticidal compositions |
| A 61K 31/551 | EP 1748997* | SUBSTITUTED THIOPHENE-2-CARBOXYLIC ACID AMIDES, THE PRODUCTION THEREOF AND THE USE THEREOF AS DRUGS |
| ***A 61K 31/553*** | EP 1777225 | FUSED BENZAMIDE COMPOUND AND VANILLOID RECEPTOR 1 (VR1) ACTIVITY INHIBITOR |
| ***A 61K 31/553*** | EP 2101768* | USE OF NEUROPROTECTIVE COMPOUNDS FOR OBTAINING DRUGS FOR TREATING NEURODEGENERATIVE DISEASES |
| ***A 61K 31/56*** | EP 1828223* | NOVEL BETULIN DERIVATIVES, PREPARATION THEREOF AND USE THEREOF |
| A 61K 31/575 | EP 1720577* | CICLESONIDE AND GLYCOPYRRONIUM COMBINATION |
| ***A 61K 31/66*** | EP 2107909* | COMPOUNDS AND PHARMACEUTICAL COMPOSITIONS FOR THE TREATMENT OF LIVER DISORDERS |
| ***A 61K 31/661*** | EP 1986623* | METHOD FOR TREATMENT OF NEUROPATHIC PAIN |
| A 61K 31/70 | EP 1742534* | GLUCOSAMINE AND GLUCOSAMINE/ANTI-INFLAMMATORY MUTUAL PRODRUGS, COMPOSITIONS, AND METHODS |
| ***A 61K 31/7048*** | EP 1844053* | ANTI-INFLAMMATORY MACROLIDE CONJUGATES |
| ***A 61K 31/7052*** | EP 1844053* | ANTI-INFLAMMATORY MACROLIDE CONJUGATES |
| ***A 61K 31/713*** | EP 1768699* | INDUCTION OF APOPTOSIS IN TOLL-LIKE RECEPTOR EXPRESSING TUMOR CELLS |
| ***A 61K 31/713*** | EP 1931783* | CHIMERIC HCN CHANNELS |
| ***A 61K 33/00*** | EP 1898708* | COMPOSITIONS AND METHODS FOR PRODUCING A SALTY TASTE IN FOODS OR BEVERAGES |
| ***A 61K 33/04*** | EP 1779856 | Use of selenium compounds, especially selenium yeasts in the treatment of Alzheimer, neurodegenerative diseases and diabetes |
| ***A 61K 33/14*** | EP 1898708* | COMPOSITIONS AND METHODS FOR PRODUCING A SALTY TASTE IN FOODS OR BEVERAGES |
| ***A 61K 35/12*** | EP 1931783* | CHIMERIC HCN CHANNELS |
| A 61K 35/48 | EP 1694345* | COMPOSITIONS AND METHODS FOR THE TREATMENT OF LYSOSOMAL STORAGE DISORDERS |
| ***A 61K 36/06*** | EP 1779856 | Use of selenium compounds, especially selenium yeasts in the treatment of Alzheimer, neurodegenerative diseases and diabetes |
| ***A 61K 36/064*** | EP 1779856 | Use of selenium compounds, especially selenium yeasts in the treatment of Alzheimer, neurodegenerative diseases and diabetes |

| (51) | Broj objave evropske prijave patenta | (51) |
|---|---|---|
| ***A 61K 36/53*** | EP 1744744* | BIOACTIVE COMPOUNDS AND METHODS OF USES THEREOF |
| A 61K 38/00 | EP 1715892* | METHODS AND COMPOSITIONS FOR MODULATING ANGIOGENESIS |
| ***A 61K 38/00*** | EP 1874803* | CARRIER FOR TARGETING NERVE CELLS |
| ***A 61K 38/02*** | EP 1896048* | PITUITARY ADENYLATE CYCLASE ACTIVATING PEPTIDE (PACAP) RECEPTOR (VPAC2) AGONISTS AND THEIR PHARMACOLOGICAL METHODS OF USE |
| A 61K 38/04 | EP 1745073* | CELL SURFACE RECEPTOR ISOFORMS AND METHODS OF IDENTIFYING AND USING THE SAME |
| A 61K 38/06 | EP 1701732* | SULFHYDRYL PROTECTED GLUTATHIONE PRODRUG |
| ***A 61K 38/08*** | EP 2001501* | METHOD TO REDUCE THE RISK AND/OR SEVERITY OF ANTHRAX INFECTION |
| ***A 61K 38/08*** | EP 2167113* | NEUROPLASTIN DERIVED PEPTIDES |
| ***A 61K 38/10*** | EP 2167113* | NEUROPLASTIN DERIVED PEPTIDES |
| ***A 61K 38/15*** | EP 1942944* | MACROCYCLIC DEPSIPEPTIDE ANTIBODY-DRUG CONJUGATES AND METHODS |
| ***A 61K 38/17*** | EP 1931783* | CHIMERIC HCN CHANNELS |
| ***A 61K 38/17*** | EP 2167113* | NEUROPLASTIN DERIVED PEPTIDES |
| A 61K 38/21 | EP 1688420 | 5-5-MEMBERED FUSED HETEROCYCLIC COMPOUND AND USE THEREOF AS HCV POLYMERASE INHIBITOR |
| ***A 61K 38/43*** | EP 2049151* | METHODS AND COMPOSITIONS FOR THE TREATMENT OF CANCER |
| ***A 61K 38/46*** | EP 2049151* | METHODS AND COMPOSITIONS FOR THE TREATMENT OF CANCER |
| ***A 61K 39/00*** | EP 1789081* | TREATMENT OF ATHEROSCLEROSIS |
| ***A 61K 39/00*** | EP 1962893* | CHIMERIC VIRUSES PRESENTING NON-NATIVE SURFACE PROTEINS AND USES THEREOF |
| ***A 61K 39/00*** | EP 2173438* | TREATMENTS AND DIAGNOSTICS FOR CANCER, INFLAMMATORY DISORDERS AND AUTOIMMUNE DISORDERS |
| ***A 61K 39/145*** | EP 1962893* | CHIMERIC VIRUSES PRESENTING NON-NATIVE SURFACE PROTEINS AND USES THEREOF |
| ***A 61K 39/15*** | EP 1962893* | CHIMERIC VIRUSES PRESENTING NON-NATIVE SURFACE PROTEINS AND USES THEREOF |
| ***A 61K 39/17*** | EP 1962893* | CHIMERIC VIRUSES PRESENTING NON-NATIVE SURFACE PROTEINS AND USES THEREOF |
| A 61K 39/215 | EP 1694830* | NOVEL ATYPICAL PNEUMONIA-CAUSING VIRUS |
| A 61K 39/395 | EP 1715892* | METHODS AND COMPOSITIONS FOR MODULATING ANGIOGENESIS |
| ***A 61K 39/395*** | EP 1768699* | INDUCTION OF APOPTOSIS IN TOLL-LIKE RECEPTOR EXPRESSING TUMOR CELLS |
| ***A 61K 39/395*** | EP 1844076* | ANTI-EPHB2 ANTIBODIES AND METHODS USING SAME |
| ***A 61K 39/395*** | EP 2001510* | METHODS OF TREATING LUPUS USING CD4 ANTIBODIES |
| ***A 61K 39/395*** | EP 2007812* | ERYTHROPOIETIN RECEPTOR AGONISTS |
| ***A 61K 39/395*** | EP 2040751* | COMBINATION THERAPY EMPLOYING LYMPHOTOXIN BETA RECEPTOR BINDING MOLECULES IN COMBINATION WITH SECOND AGENTS |
| ***A 61K 39/395*** | EP 2167113* | NEUROPLASTIN DERIVED PEPTIDES |
| A 61K 45/00 | EP 1738766 | PREVENTIVE AND/OR THERAPEUTIC AGENT FOR DISEASE ACCOMPANIED BY CHRONIC MUSCLE/SKELETON PAIN |
| ***A 61K 45/00*** | EP 1768699* | INDUCTION OF APOPTOSIS IN TOLL-LIKE RECEPTOR EXPRESSING TUMOR CELLS |
| ***A 61K 45/00*** | EP 1777225 | FUSED BENZAMIDE COMPOUND AND VANILLOID RECEPTOR 1 (VR1) ACTIVITY INHIBITOR |
| A 61K 45/06 | EP 1720577* | CICLESONIDE AND GLYCOPYRRONIUM COMBINATION |
| ***A 61K 47/02*** | EP 2079449* | PHENYLALKYLAMINO CARBAMATE COMPOSITIONS |
| ***A 61K 47/02*** | EP 2089002* | PHENYLALKYL CARBAMATE COMPOSITIONS |
| ***A 61K 47/26*** | EP 1806129 | COMPOSITION CONTAINING FINE PARTICLES AND PROCESS FOR PRODUCING THE SAME |

| (51) | Broj objave evropske prijave patenta | (51) |
|---|---|---|
| ***A 61K 47/40*** | EP 1806129 | COMPOSITION CONTAINING FINE PARTICLES AND PROCESS FOR PRODUCING THE SAME |
| A 61K 47/48 | EP 1747019* | CAMPTOTHECIN DERIVATIVES CONJUGATED IN POSITION 20 WITH INTEGRIN ANTAGONISTS |
| ***A 61K 47/48*** | EP 1844076* | ANTI-EPHB2 ANTIBODIES AND METHODS USING SAME |
| ***A 61K 47/48*** | EP 1942944* | MACROCYCLIC DEPSIPEPTIDE ANTIBODY-DRUG CONJUGATES AND METHODS |
| A 61K 48/00 | EP 1694345* | COMPOSITIONS AND METHODS FOR THE TREATMENT OF LYSOSOMAL STORAGE DISORDERS |
| ***A 61L 9/12*** | EP 2133104 | Core for Rolls |
| ***A 61M 5/00*** | EP 1904145* | METHOD AND APPARATUS FOR DELIVERING EPINEPHRINE |
| ***A 61M 5/20*** | EP 1904145* | METHOD AND APPARATUS FOR DELIVERING EPINEPHRINE |
| ***A 61M 5/30*** | EP 1904145* | METHOD AND APPARATUS FOR DELIVERING EPINEPHRINE |
| ***A 61M 31/00*** | EP 1904145* | METHOD AND APPARATUS FOR DELIVERING EPINEPHRINE |
| ***A 61M 31/00*** | EP 2040789* | MEDICATION APPLICATOR DEVICE |
| ***A 61N 5/06*** | EP 2044974 | Light-emitting diode (LED) light therapy device |
| A 61P 1/00 | EP 1742934* | PIPERIDINE DERIVATIVES AS MODULATORS OF CHEMOKINE RECEPTOR CCR5 |
| ***A 61P 1/04*** | EP 1892238 | 1, 2-DI(CYCLIC GROUP)SUBSTITUTED BENZENE DERIVATIVE |
| ***A 61P 1/04*** | EP 2065379 | BENZIMIDAZOLE COMPOUND HAVING GASTRIC ACID SECRETION INHIBITORY ACTIVITY |
| A 61P 1/16 | EP 1688420 | 5-5-MEMBERED FUSED HETEROCYCLIC COMPOUND AND USE THEREOF AS HCV POLYMERASE INHIBITOR |
| A 61P 1/16 | EP 1694345* | COMPOSITIONS AND METHODS FOR THE TREATMENT OF LYSOSOMAL STORAGE DISORDERS |
| A 61P 3/00 | EP 1738766 | PREVENTIVE AND/OR THERAPEUTIC AGENT FOR DISEASE ACCOMPANIED BY CHRONIC MUSCLE/SKELETON PAIN |
| ***A 61P 3/00*** | EP 1756107* | ARYL-SUBSTITUTED PIPERAZINE DERIVATIVES |
| ***A 61P 3/10*** | EP 1824469* | A METHOD OF MODULATING B CELL FUNCTIONING |
| ***A 61P 3/10*** | EP 1854794 | 2-N-{5-[[4-[2-(methyl-2-pyridinylamino) ethoxy] phenyl]methyl]-2-4-thiazolidinedione} butanedioic acid, methods of preparation and compositions with rosiglitazone maleate |
| ***A 61P 3/10*** | EP 2108016* | 2-ANILINO-4-HETEROARYL PYRIMIDINE DERIVATIVES, AND PREPARATION THEREOF AS MEDICAMENTS, PHARMACEUTICAL COMPOSITIONS, AND IN PARTICULAR IKK INHIBITORS |
| A 61P 7/02 | EP 1748997* | SUBSTITUTED THIOPHENE-2-CARBOXYLIC ACID AMIDES, THE PRODUCTION THEREOF AND THE USE THEREOF AS DRUGS |
| ***A 61P 7/02*** | EP 2167495* | SUBSTITUTED OXAZOLIDINONES AND THE USE THEREOF |
| ***A 61P 7/06*** | EP 2007812* | ERYTHROPOIETIN RECEPTOR AGONISTS |
| A 61P 9/00 | EP 1723129* | 1-AKAN-2-OL SUBSTITUTED PIPERAZINE AND PIPERIDINE COMPOUNDS |
| ***A 61P 9/00*** | EP 1777225 | FUSED BENZAMIDE COMPOUND AND VANILLOID RECEPTOR 1 (VR1) ACTIVITY INHIBITOR |
| ***A 61P 9/10*** | EP 2167113* | NEUROPLASTIN DERIVED PEPTIDES |
| A 61P 11/00 | EP 1720577* | CICLESONIDE AND GLYCOPYRRONIUM COMBINATION |
| A 61P 11/00 | EP 1742934* | PIPERIDINE DERIVATIVES AS MODULATORS OF CHEMOKINE RECEPTOR CCR5 |
| ***A 61P 11/00*** | EP 1841736* | INDOLES USEFUL IN THE TREATMENT OF INFLAMMATION |
| ***A 61P 11/00*** | EP 2164491* | PIPERIDINE-4-ACETIC ACID DERIVATIVES AND THEIR USE |

| (51) | Broj objave evropske prijave patenta | (51) |
|---|---|---|
| ***A 61P 11/06*** | EP 1856094* | MICROCRYSTALLINE (5-FLUORO-2-METHYL-3-QUINOLIN-2-YLMETHYL-INDOL-1-YL)ACETIC ACID |
| ***A 61P 11/06*** | EP 1892238 | 1, 2-DI(CYCLIC GROUP)SUBSTITUTED BENZENE DERIVATIVE |
| ***A 61P 11/06*** | EP 2164491* | PIPERIDINE-4-ACETIC ACID DERIVATIVES AND THEIR USE |
| A 61P 17/00 | EP 1742934* | PIPERIDINE DERIVATIVES AS MODULATORS OF CHEMOKINE RECEPTOR CCR5 |
| A 61P 17/02 | EP 1715892* | METHODS AND COMPOSITIONS FOR MODULATING ANGIOGENESIS |
| ***A 61P 17/06*** | EP 1824469* | A METHOD OF MODULATING B CELL FUNCTIONING |
| A 61P 19/00 | EP 1742934* | PIPERIDINE DERIVATIVES AS MODULATORS OF CHEMOKINE RECEPTOR CCR5 |
| A 61P 19/02 | EP 1715892* | METHODS AND COMPOSITIONS FOR MODULATING ANGIOGENESIS |
| A 61P 19/02 | EP 1738766 | PREVENTIVE AND/OR THERAPEUTIC AGENT FOR DISEASE ACCOMPANIED BY CHRONIC MUSCLE/SKELETON PAIN |
| ***A 61P 19/02*** | EP 1802660* | METHODS OF USING DEATH RECEPTOR LIGANDS AND CD20 ANTIBODIES |
| ***A 61P 19/02*** | EP 1892238 | 1, 2-DI(CYCLIC GROUP)SUBSTITUTED BENZENE DERIVATIVE |
| A 61P 19/04 | EP 1738766 | PREVENTIVE AND/OR THERAPEUTIC AGENT FOR DISEASE ACCOMPANIED BY CHRONIC MUSCLE/SKELETON PAIN |
| A 61P 21/00 | EP 1738766 | PREVENTIVE AND/OR THERAPEUTIC AGENT FOR DISEASE ACCOMPANIED BY CHRONIC MUSCLE/SKELETON PAIN |
| A 61P 21/00 | EP 1750719* | TREATMENT OF DISEASES ASSOCIATED WITH ALTERED LEVEL OF AMYLOID BETA PEPTIDES |
| ***A 61P 21/00*** | EP 2176230* | TREATMENT OF DUCHENNE MUSCULAR DYSTROPHY |
| A 61P 25/00 | EP 1705988* | IMMUNOMODULATORY COMPOUNDS FOR THE TREATMENT OF CENTRAL NERVOUS SYSTEM DISORDERS |
| ***A 61P 25/00*** | EP 1734962* | COMPOSITIONS AND METHODS FOR MODULATING GATED ION CHANNELS |
| A 61P 25/00 | EP 1751134* | PYRIDINE DERIVATIVES OF ALKYL OXINDOLES AS 5-HT7 RECEPTOR ACTIVE AGENTS |
| ***A 61P 25/00*** | EP 1799224* | MEMANTINE FOR THE TREATMENT OF CHILDHOOD BEHAVIORAL DISORDERS |
| ***A 61P 25/00*** | EP 1802660* | METHODS OF USING DEATH RECEPTOR LIGANDS AND CD20 ANTIBODIES |
| ***A 61P 25/00*** | EP 1892238 | 1, 2-DI(CYCLIC GROUP)SUBSTITUTED BENZENE DERIVATIVE |
| ***A 61P 25/00*** | EP 2101768* | USE OF NEUROPROTECTIVE COMPOUNDS FOR OBTAINING DRUGS FOR TREATING NEURODEGENERATIVE DISEASES |
| ***A 61P 25/02*** | EP 1824469* | A METHOD OF MODULATING B CELL FUNCTIONING |
| ***A 61P 25/02*** | EP 1986623* | METHOD FOR TREATMENT OF NEUROPATHIC PAIN |
| ***A 61P 25/04*** | EP 1777225 | FUSED BENZAMIDE COMPOUND AND VANILLOID RECEPTOR 1 (VR1) ACTIVITY INHIBITOR |
| A 61P 25/06 | EP 1720541* | TREATMENT OR PROPHYLAXIS OF MIGRAINE OR HEADACHE DISORDERS USING CITALOPRAM, ESCITALOPRAM OR CITALOPRAM METABOLITES |
| ***A 61P 25/22*** | EP 1799224* | MEMANTINE FOR THE TREATMENT OF CHILDHOOD BEHAVIORAL DISORDERS |
| ***A 61P 25/24*** | EP 1799224* | MEMANTINE FOR THE TREATMENT OF CHILDHOOD BEHAVIORAL DISORDERS |
| A 61P 25/28 | EP 1557412 | Fluorinated benzothiadiazine derivatives and their use as AMPA receptor modulators |

| (51) | Broj objave evropske prijave patenta | (51) |
|---|---|---|
| ***A 61P 25/28*** | EP 1779856 | Use of selenium compounds, especially selenium yeasts in the treatment of Alzheimer, neurodegenerative diseases and diabetes |
| ***A 61P 25/28*** | EP 2019094 | HETEROCYCLIC TYPE CINNAMIDE DERIVATIVE |
| ***A 61P 25/28*** | EP 2167113* | NEUROPLASTIN DERIVED PEPTIDES |
| ***A 61P 29/00*** | EP 1734962* | COMPOSITIONS AND METHODS FOR MODULATING GATED ION CHANNELS |
| A 61P 29/00 | EP 1738766 | PREVENTIVE AND/OR THERAPEUTIC AGENT FOR DISEASE ACCOMPANIED BY CHRONIC MUSCLE/SKELETON PAIN |
| ***A 61P 29/00*** | EP 1777225 | FUSED BENZAMIDE COMPOUND AND VANILLOID RECEPTOR 1 (VR1) ACTIVITY INHIBITOR |
| ***A 61P 29/00*** | EP 1824469* | A METHOD OF MODULATING B CELL FUNCTIONING |
| ***A 61P 29/00*** | EP 1841736* | INDOLES USEFUL IN THE TREATMENT OF INFLAMMATION |
| ***A 61P 29/00*** | EP 1844053* | ANTI-INFLAMMATORY MACROLIDE CONJUGATES |
| ***A 61P 29/00*** | EP 1892238 | 1, 2-DI(CYCLIC GROUP)SUBSTITUTED BENZENE DERIVATIVE |
| ***A 61P 29/00*** | EP 2041107* | 3,4-DI-SUBSTITUTED CYCLOBUTENE-1,2-DIONES AS CXC-CHEMOKINE RECEPTOR LIGANDS |
| ***A 61P 29/00*** | EP 2108016* | 2-ANILINO-4-HETEROARYL PYRIMIDINE DERIVATIVES, AND PREPARATION THEREOF AS MEDICAMENTS, PHARMACEUTICAL COMPOSITIONS, AND IN PARTICULAR IKK INHIBITORS |
| ***A 61P 29/00*** | EP 2164491* | PIPERIDINE-4-ACETIC ACID DERIVATIVES AND THEIR USE |
| ***A 61P 29/00*** | EP 2173438* | TREATMENTS AND DIAGNOSTICS FOR CANCER, INFLAMMATORY DISORDERS AND AUTOIMMUNE DISORDERS |
| ***A 61P 31/00*** | EP 2044066* | CRYSTALLINE FORMS OF N-[5-[[[5-(1,1-DIMETHYLETHYL)-2-OXAZOLYL]METHYL] THIO]-2-THIAZOLYL]-4-PIPERIDINECARBOXAMIDE |
| ***A 61P 31/00*** | EP 2202230 | Competitive inhibitors of type ii dehydroquinase enzyme |
| ***A 61P 31/04*** | EP 2065379 | BENZIMIDAZOLE COMPOUND HAVING GASTRIC ACID SECRETION INHIBITORY ACTIVITY |
| ***A 61P 31/04*** | EP 2134721* | ANTIMICROBIAL HETEROCYCLIC COMPOUNDS FOR TREATMENT OF BACTERIAL INFECTIONS |
| A 61P 31/12 | EP 1747019* | CAMPTOTHECIN DERIVATIVES CONJUGATED IN POSITION 20 WITH INTEGRIN ANTAGONISTS |
| A 61P 31/14 | EP 1688420 | 5-5-MEMBERED FUSED HETEROCYCLIC COMPOUND AND USE THEREOF AS HCV POLYMERASE INHIBITOR |
| ***A 61P 31/18*** | EP 1828223* | NOVEL BETULIN DERIVATIVES, PREPARATION THEREOF AND USE THEREOF |
| ***A 61P 31/18*** | EP 2164491* | PIPERIDINE-4-ACETIC ACID DERIVATIVES AND THEIR USE |
| A 61P 33/00 | EP 1747019* | CAMPTOTHECIN DERIVATIVES CONJUGATED IN POSITION 20 WITH INTEGRIN ANTAGONISTS |
| ***A 61P 33/00*** | EP 2314292 | Endoparasiticidal compositions |
| ***A 61P 33/10*** | EP 2314292 | Endoparasiticidal compositions |
| A 61P 35/00 | EP 1715892* | METHODS AND COMPOSITIONS FOR MODULATING ANGIOGENESIS |
| A 61P 35/00 | EP 1732919* | SUBSTITUTED THIOPHENE DERIVATIVES AS ANTI-CANCER AGENTS |
| ***A 61P 35/00*** | EP 1744744* | BIOACTIVE COMPOUNDS AND METHODS OF USES THEREOF |
| A 61P 35/00 | EP 1747019* | CAMPTOTHECIN DERIVATIVES CONJUGATED IN POSITION 20 WITH INTEGRIN ANTAGONISTS |
| A 61P 35/00 | EP 1751143* | PYRIMIDINE DERIVATIVES FOR THE TREATMENT OF ABNORMAL CELL GROWTH |
| ***A 61P 35/00*** | EP 1768699* | INDUCTION OF APOPTOSIS IN TOLL-LIKE RECEPTOR EXPRESSING TUMOR CELLS |
| ***A 61P 35/00*** | EP 1824469* | A METHOD OF MODULATING B CELL FUNCTIONING |

| (51) | Broj objave evropske prijave patenta | (51) |
|---|---|---|
| ***A 61P 35/00*** | EP 1833481* | FARNESYL PROTEIN TRANSFERASE INHIBITORS AND METHODS FOR TREATING PROLIFERATIVE DISEASES |
| ***A 61P 35/00*** | EP 1835908* | INDOLE DERIVATIVES WITH ANTITUMOR ACTIVITY |
| ***A 61P 35/00*** | EP 1844076* | ANTI-EPHB2 ANTIBODIES AND METHODS USING SAME |
| ***A 61P 35/00*** | EP 1942944* | MACROCYCLIC DEPSIPEPTIDE ANTIBODY-DRUG CONJUGATES AND METHODS |
| ***A 61P 35/00*** | EP 1973882* | PIPERAZINE DERIVATIVES AS FARNESYL PROTEIN TRANSFERASE INHIBITORS |
| ***A 61P 35/00*** | EP 2027109* | 4- (2, 6-DICHLORO-BENZOYLAMINO) -1H-PYRAZOLE-S-CARBOXYLIC ACID (1-METHANESULPH0NYL-PIPERIDIN-4-YL) -AMIDE FOR THE TREATMENT OF CANCER |
| ***A 61P 35/00*** | EP 2040751* | COMBINATION THERAPY EMPLOYING LYMPHOTOXIN BETA RECEPTOR BINDING MOLECULES IN COMBINATION WITH SECOND AGENTS |
| ***A 61P 35/00*** | EP 2041107* | 3,4-DI-SUBSTITUTED CYCLOBUTENE-1,2-DIONES AS CXC-CHEMOKINE RECEPTOR LIGANDS |
| ***A 61P 35/00*** | EP 2108016* | 2-ANILINO-4-HETEROARYL PYRIMIDINE DERIVATIVES, AND PREPARATION THEREOF AS MEDICAMENTS, PHARMACEUTICAL COMPOSITIONS, AND IN PARTICULAR IKK INHIBITORS |
| ***A 61P 35/00*** | EP 2119706 | PYRIDINE OR PYRIMIDINE DERIVATIVE HAVING EXCELLENT CELL GROWTH INHIBITION EFFECT AND EXCELLENT ANTI-TUMOR EFFECT ON CELL STRAIN HAVING AMPLIFICATION OF HGFR GENE |
| ***A 61P 35/00*** | EP 2139329* | NOVEL IMIDAZO BASED HETEROCYCLES |
| ***A 61P 35/00*** | EP 2167113* | NEUROPLASTIN DERIVED PEPTIDES |
| ***A 61P 35/00*** | EP 2173438* | TREATMENTS AND DIAGNOSTICS FOR CANCER, INFLAMMATORY DISORDERS AND AUTOIMMUNE DISORDERS |
| ***A 61P 35/00*** | EP 2212326* | 2-ANILINOPURIN-8-ONES AS INHIBITORS OF TTK/MPS1 FOR THE TREATMENT OF PROLIFERATIVE DISORDERS |
| ***A 61P 35/02*** | EP 1802660* | METHODS OF USING DEATH RECEPTOR LIGANDS AND CD20 ANTIBODIES |
| ***A 61P 35/02*** | EP 1824469* | A METHOD OF MODULATING B CELL FUNCTIONING |
| A 61P 35/04 | EP 1747019* | CAMPTOTHECIN DERIVATIVES CONJUGATED IN POSITION 20 WITH INTEGRIN ANTAGONISTS |
| ***A 61P 35/04*** | EP 1835908* | INDOLE DERIVATIVES WITH ANTITUMOR ACTIVITY |
| ***A 61P 35/04*** | EP 2049151* | METHODS AND COMPOSITIONS FOR THE TREATMENT OF CANCER |
| A 61P 37/00 | EP 1715892* | METHODS AND COMPOSITIONS FOR MODULATING ANGIOGENESIS |
| ***A 61P 37/00*** | EP 2164491* | PIPERIDINE-4-ACETIC ACID DERIVATIVES AND THEIR USE |
| ***A 61P 37/02*** | EP 1892238 | 1, 2-DI(CYCLIC GROUP)SUBSTITUTED BENZENE DERIVATIVE |
| ***A 61P 37/08*** | EP 1777225 | FUSED BENZAMIDE COMPOUND AND VANILLOID RECEPTOR 1 (VR1) ACTIVITY INHIBITOR |
| ***A 61P 37/08*** | EP 1892238 | 1, 2-DI(CYCLIC GROUP)SUBSTITUTED BENZENE DERIVATIVE |
| A 61P 43/00 | EP 1688420 | 5-5-MEMBERED FUSED HETEROCYCLIC COMPOUND AND USE THEREOF AS HCV POLYMERASE INHIBITOR |
| A 61P 43/00 | EP 1701732* | SULFHYDRYL PROTECTED GLUTATHIONE PRODRUG |
| A 61P 43/00 | EP 1738766 | PREVENTIVE AND/OR THERAPEUTIC AGENT FOR DISEASE ACCOMPANIED BY CHRONIC MUSCLE/SKELETON PAIN |
| ***A 61P 43/00*** | EP 1777225 | FUSED BENZAMIDE COMPOUND AND VANILLOID RECEPTOR 1 (VR1) ACTIVITY INHIBITOR |
| ***A 61P 43/00*** | EP 1892238 | 1, 2-DI(CYCLIC GROUP)SUBSTITUTED BENZENE DERIVATIVE |
| ***A 61P 43/00*** | EP 2019094 | HETEROCYCLIC TYPE CINNAMIDE DERIVATIVE |

| (51) | Broj objave evropske prijave patenta | (51) |
|---|---|---|
| ***A 61P 43/00*** | EP 2065379 | BENZIMIDAZOLE COMPOUND HAVING GASTRIC ACID SECRETION INHIBITORY ACTIVITY |
| ***A 61Q 15/00*** | EP 1962777* | IMPROVED LONG-TERM EFFECT OF ANTIPERSPIRANTS |
| ***A 63B 41/08*** | EP 1896649* | LIQUID IMPERMEABLE MATERIAL |
| B 01D 3/34 | EP 1734834* | IMPROVED DISTILLATION PROCESS |
| ***B 01D 53/94*** | EP 2017442 | Adaptive reductant dosing and emission control strategies |
| ***B 01J 20/26*** | EP 1982760 | Pulverulent composition for absorbing aqueous liquids |
| ***B 05B 11/00*** | EP 2113308 | Container having wall portions with different pressure resistance |
| B 05D 3/10 | EP 1750858* | PROCESS FOR COATING AND CLEANING METAL SURFACES |
| B 05D 5/00 | EP 1750858* | PROCESS FOR COATING AND CLEANING METAL SURFACES |
| B 05D 5/12 | EP 1769557* | PROCESSING TECHNIQUES FOR THE FABRICATION OF SOLID ACID FUEL CELL MEMBRANE ELECTRODE ASSEMBLIES |
| B 05D 7/14 | EP 1750858* | PROCESS FOR COATING AND CLEANING METAL SURFACES |
| B 08B 1/00 | EP 1756507* | BALL TRAP WITH SAFETY-RELEASE GATE |
| B 08B 7/04 | EP 1756507* | BALL TRAP WITH SAFETY-RELEASE GATE |
| B 08B 9/00 | EP 1756507* | BALL TRAP WITH SAFETY-RELEASE GATE |
| B 08B 9/04 | EP 1756507* | BALL TRAP WITH SAFETY-RELEASE GATE |
| ***B 23D 21/00*** | EP 2199042 | Chamfering equipment for cylindrical stoppers |
| ***B 23K 7/00*** | EP 2191929 | Cutting table |
| ***B 23K 37/04*** | EP 2191929 | Cutting table |
| ***B 26D 3/02*** | EP 2199042 | Chamfering equipment for cylindrical stoppers |
| ***B 26D 3/16*** | EP 2199042 | Chamfering equipment for cylindrical stoppers |
| ***B 26D 7/06*** | EP 2199042 | Chamfering equipment for cylindrical stoppers |
| ***B 27K 3/34*** | EP 1827782* | USE OF ANILINOPYRIMIDINES IN WOOD PROTECTION |
| ***B 27K 3/50*** | EP 1827782* | USE OF ANILINOPYRIMIDINES IN WOOD PROTECTION |
| ***B 27K 3/52*** | EP 1827782* | USE OF ANILINOPYRIMIDINES IN WOOD PROTECTION |
| ***B 29C 45/17*** | EP 2089208* | A CONTINUOUS MOLDING MACHINE |
| ***B 29C 45/18*** | EP 2089208* | A CONTINUOUS MOLDING MACHINE |
| ***B 29C 45/64*** | EP 2089208* | A CONTINUOUS MOLDING MACHINE |
| ***B 29C 45/72*** | EP 2089208* | A CONTINUOUS MOLDING MACHINE |
| ***B 29C 49/00*** | EP 2113308 | Container having wall portions with different pressure resistance |
| ***B 29C 49/06*** | EP 2143542 | Method and apparatus for packaging a liquid food product |
| ***B 29C 49/06*** | EP 2143543 | Device and method for packaging a liquid food product |
| ***B 29C 49/06*** | EP 2143544 | Method and apparatus for packaging a liquid food product |
| ***B 29C 49/06*** | EP 2143545 | Method and apparatus for packaging a liquid food product |
| ***B 29C 49/12*** | EP 2143542 | Method and apparatus for packaging a liquid food product |
| ***B 29C 49/12*** | EP 2143543 | Device and method for packaging a liquid food product |
| ***B 29C 49/12*** | EP 2143544 | Method and apparatus for packaging a liquid food product |
| ***B 29C 49/12*** | EP 2143545 | Method and apparatus for packaging a liquid food product |
| ***B 29C 49/46*** | EP 2143542 | Method and apparatus for packaging a liquid food product |
| ***B 29C 49/46*** | EP 2143543 | Device and method for packaging a liquid food product |
| ***B 29C 49/46*** | EP 2143544 | Method and apparatus for packaging a liquid food product |
| ***B 29C 49/46*** | EP 2143545 | Method and apparatus for packaging a liquid food product |
| ***B 29C 49/78*** | EP 2143542 | Method and apparatus for packaging a liquid food product |
| ***B 29C 49/78*** | EP 2143543 | Device and method for packaging a liquid food product |
| ***B 29C 49/78*** | EP 2143544 | Method and apparatus for packaging a liquid food product |
| ***B 32B 27/12*** | EP 1896258* | MATERIAL AND JOINT FOR A SHELTER |
| ***B 32B 33/00*** | EP 1896258* | MATERIAL AND JOINT FOR A SHELTER |
| ***B 41M 5/26*** | EP 1884233 | METHOD OF MARKING COMPOSITION FOR ORAL ADMINISTRATION |
| ***B 60R 16/023*** | EP 2017442 | Adaptive reductant dosing and emission control strategies |
| ***B 61K 1/00*** | EP 2162379* | TRANSPORT SYSTEM |
| B 61L 25/02 | EP 1723547* | GEOGRAPHIC INFORMATION SYSTEM AND METHOD FOR MONITORING DYNAMIC TRAIN POSITIONS |
| B 61L 27/00 | EP 1723547* | GEOGRAPHIC INFORMATION SYSTEM AND METHOD FOR MONITORING DYNAMIC TRAIN POSITIONS |

| (51) | Broj objave evropske prijave patenta | (51) |
|---|---|---|
| ***B 62K 15/00*** | EP 1812281* | RELEASABLE SECURING APPARATUS AND METHOD OF USING SAME |
| ***B 65B 3/02*** | EP 2143542 | Method and apparatus for packaging a liquid food product |
| ***B 65B 3/02*** | EP 2143543 | Device and method for packaging a liquid food product |
| ***B 65B 3/02*** | EP 2143544 | Method and apparatus for packaging a liquid food product |
| ***B 65B 3/02*** | EP 2143545 | Method and apparatus for packaging a liquid food product |
| ***B 65B 55/08*** | EP 2143545 | Method and apparatus for packaging a liquid food product |
| ***B 65B 55/10*** | EP 2143545 | Method and apparatus for packaging a liquid food product |
| ***B 65D 1/02*** | EP 2113308 | Container having wall portions with different pressure resistance |
| ***B 65D 39/00*** | EP 2199042 | Chamfering equipment for cylindrical stoppers |
| ***B 65D 41/34*** | EP 1829790 | NON-REFILLABLE CAP FOR BOTTLES CONTAINING ALCOHOL AND SIMILAR |
| ***B 65D 51/22*** | EP 1828002* | VESSEL CAP AND SYSTEM FOR MANUFACTURING THE SAME |
| ***B 65H 49/18*** | EP 1924518* | THREAD SPOOL AND CAP |
| ***B 65H 75/18*** | EP 2133104 | Core for Rolls |
| ***B 66B 11/04*** | WO 2010134106 | DEVICE FOR SAVING ENERGY DURING VERTICAL AND HORIZONTAL MOTIONS WHEREIN THE RESISTING TORQUE CAN BE SPLIT INTO TWO TORQUES OPPOSING EACH OTHER |
| ***B 66B 21/12*** | EP 2162379* | TRANSPORT SYSTEM |
| ***B 66F 9/06*** | EP 1907311* | SHUTTLES FOR TRANSPORTING GOODS |
| ***C 01F 7/02*** | EP 1945568* | THERMALLY STABLE ALUMINUM HYDROXIDE PARTICLES AND THEIR USE AS FILLERS IN EPOXY LAMINATE RESINS |
| ***C 02F 1/00*** | EP 1893533* | APPARATUS AND METHOD FOR THE NON-CHEMICAL STABILIZATION OF BIO-SOLIDS |
| ***C 02F 3/32*** | EP 2144855* | PROCESS FOR BIOSTABILIZATION AND HUMIFICATION OF BIOLOGICAL SLUDGE IN PLANTED FILTERING BEDS |
| ***C 02F 11/16*** | EP 2144855* | PROCESS FOR BIOSTABILIZATION AND HUMIFICATION OF BIOLOGICAL SLUDGE IN PLANTED FILTERING BEDS |
| ***C 07C 49/213*** | EP 1943254* | REAGENTS FOR HIGHLY SPECIFIC DETECTION OF PEROXYNITRITE |
| ***C 07C 55/02*** | EP 1915334* | NOVEL SALTS OF FUMARIC ACID MONOALKYLESTERS AND THEIR PHARMACEUTICAL USE |
| ***C 07C 62/26*** | EP 2202230 | Competitive inhibitors of type ii dehydroquinase enzyme |
| ***C 07C 62/38*** | EP 2202230 | Competitive inhibitors of type ii dehydroquinase enzyme |
| ***C 07C 69/593*** | EP 1915334* | NOVEL SALTS OF FUMARIC ACID MONOALKYLESTERS AND THEIR PHARMACEUTICAL USE |
| ***C 07C 69/76*** | EP 1877362* | CRYSTALLINE SOLID AND AMORPHOUS FORMS OF (-)-HALOFENATE |
| ***C 07C 225/18*** | EP 2027089* | IMPURITIES OF DONEPEZIL |
| ***C 07C 233/65*** | EP 1917241* | BICYCLIC DERIVATIVES AS P38 KINASE INHIBITORS |
| ***C 07C 315/02*** | EP 1863759* | PROCESS FOR PREPARATION OF BICALUTAMIDE |
| ***C 07C 315/06*** | EP 1863759* | PROCESS FOR PREPARATION OF BICALUTAMIDE |
| C 07D 207/00 | EP 1715892* | METHODS AND COMPOSITIONS FOR MODULATING ANGIOGENESIS |
| ***C 07D 207/08*** | EP 1756107* | ARYL-SUBSTITUTED PIPERAZINE DERIVATIVES |
| ***C 07D 207/08*** | EP 1892238 | 1, 2-DI(CYCLIC GROUP)SUBSTITUTED BENZENE DERIVATIVE |
| ***C 07D 207/26*** | EP 1756107* | ARYL-SUBSTITUTED PIPERAZINE DERIVATIVES |
| ***C 07D 207/27*** | EP 1892238 | 1, 2-DI(CYCLIC GROUP)SUBSTITUTED BENZENE DERIVATIVE |
| ***C 07D 207/34*** | EP 1943254* | REAGENTS FOR HIGHLY SPECIFIC DETECTION OF PEROXYNITRITE |
| ***C 07D 207/404*** | EP 1892238 | 1, 2-DI(CYCLIC GROUP)SUBSTITUTED BENZENE DERIVATIVE |
| ***C 07D 209/30*** | EP 1841736* | INDOLES USEFUL IN THE TREATMENT OF INFLAMMATION |
| ***C 07D 209/42*** | EP 1841736* | INDOLES USEFUL IN THE TREATMENT OF INFLAMMATION |

| (51) | Broj objave evropske prijave patenta | (51) |
|---|---|---|
| ***C 07D 209/46*** | EP 1917241* | BICYCLIC DERIVATIVES AS P38 KINASE INHIBITORS |
| ***C 07D 211/32*** | EP 2027089* | IMPURITIES OF DONEPEZIL |
| ***C 07D 211/34*** | EP 1756107* | ARYL-SUBSTITUTED PIPERAZINE DERIVATIVES |
| ***C 07D 211/34*** | EP 2164491* | PIPERIDINE-4-ACETIC ACID DERIVATIVES AND THEIR USE |
| ***C 07D 211/46*** | EP 1892238 | 1, 2-DI(CYCLIC GROUP)SUBSTITUTED BENZENE DERIVATIVE |
| ***C 07D 211/58*** | EP 1892238 | 1, 2-DI(CYCLIC GROUP)SUBSTITUTED BENZENE DERIVATIVE |
| ***C 07D 211/58*** | EP 2164491* | PIPERIDINE-4-ACETIC ACID DERIVATIVES AND THEIR USE |
| ***C 07D 211/74*** | EP 1756107* | ARYL-SUBSTITUTED PIPERAZINE DERIVATIVES |
| ***C 07D 211/96*** | EP 2164491* | PIPERIDINE-4-ACETIC ACID DERIVATIVES AND THEIR USE |
| ***C 07D 213/74*** | EP 2099755* | ACETYLENE DERIVATIVES AS STEAROYL COA DESATURASE INHIBITORS |
| ***C 07D 213/75*** | EP 2119706 | PYRIDINE OR PYRIMIDINE DERIVATIVE HAVING EXCELLENT CELL GROWTH INHIBITION EFFECT AND EXCELLENT ANTI-TUMOR EFFECT ON CELL STRAIN HAVING AMPLIFICATION OF HGFR GENE |
| ***C 07D 221/16*** | EP 1973882* | PIPERAZINE DERIVATIVES AS FARNESYL PROTEIN TRANSFERASE INHIBITORS |
| ***C 07D 231/12*** | EP 1853257* | PYRAZOLE COMPOUNDS |
| ***C 07D 231/56*** | EP 2176230* | TREATMENT OF DUCHENNE MUSCULAR DYSTROPHY |
| ***C 07D 237/20*** | EP 2099755* | ACETYLENE DERIVATIVES AS STEAROYL COA DESATURASE INHIBITORS |
| ***C 07D 239/42*** | EP 2099755* | ACETYLENE DERIVATIVES AS STEAROYL COA DESATURASE INHIBITORS |
| ***C 07D 249/08*** | EP 2019094 | HETEROCYCLIC TYPE CINNAMIDE DERIVATIVE |
| ***C 07D 277/18*** | EP 2099755* | ACETYLENE DERIVATIVES AS STEAROYL COA DESATURASE INHIBITORS |
| C 07D 277/64 | EP 1723129* | 1-AKAN-2-OL SUBSTITUTED PIPERAZINE AND PIPERIDINE COMPOUNDS |
| C 07D 279/02 | EP 1750719* | TREATMENT OF DISEASES ASSOCIATED WITH ALTERED LEVEL OF AMYLOID BETA PEPTIDES |
| C 07D 285/24 | EP 1557412 | Fluorinated benzothiadiazine derivatives and their use as AMPA receptor modulators |
| ***C 07D 295/06*** | EP 1756107* | ARYL-SUBSTITUTED PIPERAZINE DERIVATIVES |
| ***C 07D 295/08*** | EP 1756107* | ARYL-SUBSTITUTED PIPERAZINE DERIVATIVES |
| ***C 07D 305/14*** | EP 1744744* | BIOACTIVE COMPOUNDS AND METHODS OF USES THEREOF |
| C 07D 307/34 | EP 1694642* | MUTAGENIC HETEROCYCLES |
| ***C 07D 307/52*** | EP 2041107* | 3,4-DI-SUBSTITUTED CYCLOBUTENE-1,2-DIONES AS CXC-CHEMOKINE RECEPTOR LIGANDS |
| ***C 07D 307/79*** | EP 1756107* | ARYL-SUBSTITUTED PIPERAZINE DERIVATIVES |
| ***C 07D 317/46*** | EP 1863759* | PROCESS FOR PREPARATION OF BICALUTAMIDE |
| C 07D 333/38 | EP 1748997* | SUBSTITUTED THIOPHENE-2-CARBOXYLIC ACID AMIDES, THE PRODUCTION THEREOF AND THE USE THEREOF AS DRUGS |
| ***C 07D 333/54*** | EP 2202230 | Competitive inhibitors of type ii dehydroquinase enzyme |
| ***C 07D 333/56*** | EP 2202230 | Competitive inhibitors of type ii dehydroquinase enzyme |
| C 07D 401/04 | EP 1751134* | PYRIDINE DERIVATIVES OF ALKYL OXINDOLES AS 5-HT7 RECEPTOR ACTIVE AGENTS |
| ***C 07D 401/04*** | EP 1777225 | FUSED BENZAMIDE COMPOUND AND VANILLOID RECEPTOR 1 (VR1) ACTIVITY INHIBITOR |
| ***C 07D 401/04*** | EP 1841736* | INDOLES USEFUL IN THE TREATMENT OF INFLAMMATION |
| ***C 07D 401/04*** | EP 1973882* | PIPERAZINE DERIVATIVES AS FARNESYL PROTEIN TRANSFERASE INHIBITORS |
| C 07D 401/06 | EP 1742934* | PIPERIDINE DERIVATIVES AS MODULATORS OF CHEMOKINE RECEPTOR CCR5 |

| (51) | Broj objave evropske prijave patenta | (51) |
|---|---|---|
| ***C 07D 401/06*** | EP 1836190* | PREPARATION OF PHARMACEUTICAL SALTS OF PIPERAZINE COMPOUNDS |
| ***C 07D 401/06*** | EP 1841736* | INDOLES USEFUL IN THE TREATMENT OF INFLAMMATION |
| ***C 07D 401/06*** | EP 1856094* | MICROCRYSTALLINE (5-FLUORO-2-METHYL-3-QUINOLIN-2-YLMETHYL-INDOL-1-YL)ACETIC ACID |
| ***C 07D 401/10*** | EP 2019094 | HETEROCYCLIC TYPE CINNAMIDE DERIVATIVE |
| ***C 07D 401/10*** | EP 2099755* | ACETYLENE DERIVATIVES AS STEAROYL COA DESATURASE INHIBITORS |
| ***C 07D 401/12*** | EP 1891046* | POLYMORPHS OF ETHYL 3-[(2-{[4-(HEXYLOXYCARBONYLAMINO-IMINOMETHYL)PHENYLAMINO]METHYL}-1-METHYL-1H-BENZIMIDAZOLE-5-CARBONYL)PYRIDIN-2-YLAMINO]PROPIONATE |
| ***C 07D 401/12*** | EP 2027109* | 4- (2, 6-DICHLORO-BENZOYLAMINO) -1H-PYRAZOLE-S-CARBOXYLIC ACID (1-METHANESULPH0NYL-PIPERIDIN-4-YL) -AMIDE FOR THE TREATMENT OF CANCER |
| ***C 07D 401/12*** | EP 2065379 | BENZIMIDAZOLE COMPOUND HAVING GASTRIC ACID SECRETION INHIBITORY ACTIVITY |
| ***C 07D 401/12*** | EP 2099755* | ACETYLENE DERIVATIVES AS STEAROYL COA DESATURASE INHIBITORS |
| ***C 07D 401/12*** | EP 2101768* | USE OF NEUROPROTECTIVE COMPOUNDS FOR OBTAINING DRUGS FOR TREATING NEURODEGENERATIVE DISEASES |
| ***C 07D 401/12*** | EP 2119706 | PYRIDINE OR PYRIMIDINE DERIVATIVE HAVING EXCELLENT CELL GROWTH INHIBITION EFFECT AND EXCELLENT ANTI-TUMOR EFFECT ON CELL STRAIN HAVING AMPLIFICATION OF HGFR GENE |
| C 07D 401/14 | EP 1742934* | PIPERIDINE DERIVATIVES AS MODULATORS OF CHEMOKINE RECEPTOR CCR5 |
| ***C 07D 401/14*** | EP 1833481* | FARNESYL PROTEIN TRANSFERASE INHIBITORS AND METHODS FOR TREATING PROLIFERATIVE DISEASES |
| ***C 07D 401/14*** | EP 1973882* | PIPERAZINE DERIVATIVES AS FARNESYL PROTEIN TRANSFERASE INHIBITORS |
| ***C 07D 401/14*** | EP 2019094 | HETEROCYCLIC TYPE CINNAMIDE DERIVATIVE |
| ***C 07D 401/14*** | EP 2108016* | 2-ANILINO-4-HETEROARYL PYRIMIDINE DERIVATIVES, AND PREPARATION THEREOF AS MEDICAMENTS, PHARMACEUTICAL COMPOSITIONS, AND IN PARTICULAR IKK INHIBITORS |
| ***C 07D 401/14*** | EP 2119706 | PYRIDINE OR PYRIMIDINE DERIVATIVE HAVING EXCELLENT CELL GROWTH INHIBITION EFFECT AND EXCELLENT ANTI-TUMOR EFFECT ON CELL STRAIN HAVING AMPLIFICATION OF HGFR GENE |
| ***C 07D 403/02*** | EP 1778717* | CELL ADHESION INHIBITORS |
| ***C 07D 403/04*** | EP 1841736* | INDOLES USEFUL IN THE TREATMENT OF INFLAMMATION |
| C 07D 403/06 | EP 1742934* | PIPERIDINE DERIVATIVES AS MODULATORS OF CHEMOKINE RECEPTOR CCR5 |
| ***C 07D 403/06*** | EP 1943254* | REAGENTS FOR HIGHLY SPECIFIC DETECTION OF PEROXYNITRITE |
| C 07D 403/12 | EP 1751143* | PYRIMIDINE DERIVATIVES FOR THE TREATMENT OF ABNORMAL CELL GROWTH |
| ***C 07D 403/12*** | EP 2119706 | PYRIDINE OR PYRIMIDINE DERIVATIVE HAVING EXCELLENT CELL GROWTH INHIBITION EFFECT AND EXCELLENT ANTI-TUMOR EFFECT ON CELL STRAIN HAVING AMPLIFICATION OF HGFR GENE |
| ***C 07D 403/14*** | EP 1841736* | INDOLES USEFUL IN THE TREATMENT OF INFLAMMATION |
| ***C 07D 405/06*** | EP 2099755* | ACETYLENE DERIVATIVES AS STEAROYL COA DESATURASE INHIBITORS |

| (51) | Broj objave evropske prijave patenta | (51) |
|---|---|---|
| ***C 07D 405/10*** | EP 2099755* | ACETYLENE DERIVATIVES AS STEAROYL COA DESATURASE INHIBITORS |
| ***C 07D 405/12*** | EP 2164491* | PIPERIDINE-4-ACETIC ACID DERIVATIVES AND THEIR USE |
| ***C 07D 405/14*** | EP 2065379 | BENZIMIDAZOLE COMPOUND HAVING GASTRIC ACID SECRETION INHIBITORY ACTIVITY |
| C 07D 409/04 | EP 1732919* | SUBSTITUTED THIOPHENE DERIVATIVES AS ANTI-CANCER AGENTS |
| C 07D 409/12 | EP 1748997* | SUBSTITUTED THIOPHENE-2-CARBOXYLIC ACID AMIDES, THE PRODUCTION THEREOF AND THE USE THEREOF AS DRUGS |
| ***C 07D 409/12*** | EP 2164491* | PIPERIDINE-4-ACETIC ACID DERIVATIVES AND THEIR USE |
| ***C 07D 409/12*** | EP 2167495* | SUBSTITUTED OXAZOLIDINONES AND THE USE THEREOF |
| C 07D 409/14 | EP 1732919* | SUBSTITUTED THIOPHENE DERIVATIVES AS ANTI-CANCER AGENTS |
| ***C 07D 413/04*** | EP 1777225 | FUSED BENZAMIDE COMPOUND AND VANILLOID RECEPTOR 1 (VR1) ACTIVITY INHIBITOR |
| ***C 07D 413/04*** | EP 1891060* | 3-INDAZOLYL-ISOXAZOLINE DERIVATIVES AS INHIBITORS OF PHOSPHODIESTERASE TYPE-IV |
| ***C 07D 413/10*** | EP 2019094 | HETEROCYCLIC TYPE CINNAMIDE DERIVATIVE |
| C 07D 413/12 | EP 1748997* | SUBSTITUTED THIOPHENE-2-CARBOXYLIC ACID AMIDES, THE PRODUCTION THEREOF AND THE USE THEREOF AS DRUGS |
| C 07D 413/14 | EP 1732919* | SUBSTITUTED THIOPHENE DERIVATIVES AS ANTI-CANCER AGENTS |
| ***C 07D 413/14*** | EP 1777225 | FUSED BENZAMIDE COMPOUND AND VANILLOID RECEPTOR 1 (VR1) ACTIVITY INHIBITOR |
| ***C 07D 413/14*** | EP 2019094 | HETEROCYCLIC TYPE CINNAMIDE DERIVATIVE |
| ***C 07D 417/04*** | EP 1777225 | FUSED BENZAMIDE COMPOUND AND VANILLOID RECEPTOR 1 (VR1) ACTIVITY INHIBITOR |
| ***C 07D 417/06*** | EP 1841736* | INDOLES USEFUL IN THE TREATMENT OF INFLAMMATION |
| C 07D 417/12 | EP 1723129* | 1-AKAN-2-OL SUBSTITUTED PIPERAZINE AND PIPERIDINE COMPOUNDS |
| ***C 07D 417/12*** | EP 1854794 | 2-N-{5-[[4-[2-(methyl-2-pyridinylamino) ethoxy] phenyl]methyl]-2-4-thiazolidinedione} butanedioic acid, methods of preparation and compositions with rosiglitazone maleate |
| C 07D 417/14 | EP 1732919* | SUBSTITUTED THIOPHENE DERIVATIVES AS ANTI-CANCER AGENTS |
| C 07D 417/14 | EP 1742934* | PIPERIDINE DERIVATIVES AS MODULATORS OF CHEMOKINE RECEPTOR CCR5 |
| ***C 07D 417/14*** | EP 1777225 | FUSED BENZAMIDE COMPOUND AND VANILLOID RECEPTOR 1 (VR1) ACTIVITY INHIBITOR |
| ***C 07D 417/14*** | EP 2044066* | CRYSTALLINE FORMS OF N-[5-[[[5-(1,1-DIMETHYLETHYL)-2-OXAZOLYL]METHYL] THIO]-2-THIAZOLYL]-4-PIPERIDINECARBOXAMIDE |
| C 07D 471/04 | EP 1732925* | NOVEL N-(ALKOXYALKYL)CARBAMOYL- SUBSTITUTED 6-PHENYL-BENZONAPHTHYRIDINE DERIVATIVES AND THEIR USE AS PDE3/4 INHIBITORS |
| ***C 07D 471/04*** | EP 1756107* | ARYL-SUBSTITUTED PIPERAZINE DERIVATIVES |
| ***C 07D 471/04*** | EP 2019094 | HETEROCYCLIC TYPE CINNAMIDE DERIVATIVE |
| C 07D 473/06 | EP 1738766 | PREVENTIVE AND/OR THERAPEUTIC AGENT FOR DISEASE ACCOMPANIED BY CHRONIC MUSCLE/SKELETON PAIN |
| C 07D 473/12 | EP 1738766 | PREVENTIVE AND/OR THERAPEUTIC AGENT FOR DISEASE ACCOMPANIED BY CHRONIC MUSCLE/SKELETON PAIN |
| ***C 07D 487/04*** | EP 1756107* | ARYL-SUBSTITUTED PIPERAZINE DERIVATIVES |

| (51) | Broj objave evropske prijave patenta | (51) |
|---|---|---|
| ***C 07D 487/04*** | EP 1888590* | CRYSTALLINE FORMS OF A PYRROLOTRIAZINE COMPOUND |
| ***C 07D 487/04*** | EP 2139329* | NOVEL IMIDAZO BASED HETEROCYCLES |
| ***C 07D 487/04*** | EP 2212326* | 2-ANILINOPURIN-8-ONES AS INHIBITORS OF TTK/MPS1 FOR THE TREATMENT OF PROLIFERATIVE DISORDERS |
| ***C 07D 487/06*** | EP 2101768* | USE OF NEUROPROTECTIVE COMPOUNDS FOR OBTAINING DRUGS FOR TREATING NEURODEGENERATIVE DISEASES |
| ***C 07D 487/08*** | EP 1756107* | ARYL-SUBSTITUTED PIPERAZINE DERIVATIVES |
| ***C 07D 493/10*** | EP 1943254* | REAGENTS FOR HIGHLY SPECIFIC DETECTION OF PEROXYNITRITE |
| ***C 07D 493/10*** | EP 2065379 | BENZIMIDAZOLE COMPOUND HAVING GASTRIC ACID SECRETION INHIBITORY ACTIVITY |
| ***C 07D 493/22*** | EP 2044081* | IMPROVED OXIDATION PROCESS WITH ENHANCED SAFETY USEFUL IN THE MANUFACTURE OF MOXIDECTIN BY MEANS OF STABILISED 2-IODOXYBENZOIC ACID (SIBX) |
| C 07D 495/04 | EP 1688420 | 5-5-MEMBERED FUSED HETEROCYCLIC COMPOUND AND USE THEREOF AS HCV POLYMERASE INHIBITOR |
| *C 07D 495/04* | EP 1732919* | SUBSTITUTED THIOPHENE DERIVATIVES AS ANTI-CANCER AGENTS |
| C 07D 495/04 | EP 1751134* | PYRIDINE DERIVATIVES OF ALKYL OXINDOLES AS 5-HT7 RECEPTOR ACTIVE AGENTS |
| ***C 07D 495/04*** | EP 1844053* | ANTI-INFLAMMATORY MACROLIDE CONJUGATES |
| ***C 07D 495/04*** | EP 1893618* | TETRAHYDROPYRIDOTHIOPHENES FOR USE IN THE TREATMENT OF CANCER |
| ***C 07D 495/04*** | EP 1896484* | TETRAHYDROPYRIDOTHIOPHENES FOR USE IN THE TREATMENT OF CANCER |
| ***C 07D 495/04*** | EP 2010545* | A PROCESS FOR THE PREPARATION OF POLYMORPH FORM I OF (S)-(+)-METHYL-ALPHA-(2-CHLOROPHENYL)-6,7-DIHYDRO-THIENO-[3,2-C]PYRIDINE-5(4H)-ACETATE HYDROGEN SULFATE |
| ***C 07D 498/04*** | EP 1844053* | ANTI-INFLAMMATORY MACROLIDE CONJUGATES |
| ***C 07D 498/04*** | EP 2134721* | ANTIMICROBIAL HETEROCYCLIC COMPOUNDS FOR TREATMENT OF BACTERIAL INFECTIONS |
| ***C 07D 498/14*** | EP 2134721* | ANTIMICROBIAL HETEROCYCLIC COMPOUNDS FOR TREATMENT OF BACTERIAL INFECTIONS |
| ***C 07D 513/14*** | EP 2065379 | BENZIMIDAZOLE COMPOUND HAVING GASTRIC ACID SECRETION INHIBITORY ACTIVITY |
| ***C 07D 519/00*** | EP 2065379 | BENZIMIDAZOLE COMPOUND HAVING GASTRIC ACID SECRETION INHIBITORY ACTIVITY |
| ***C 07D 519/00*** | EP 2134721* | ANTIMICROBIAL HETEROCYCLIC COMPOUNDS FOR TREATMENT OF BACTERIAL INFECTIONS |
| ***C 07F 5/02*** | EP 1943254* | REAGENTS FOR HIGHLY SPECIFIC DETECTION OF PEROXYNITRITE |
| ***C 07H 17/08*** | EP 1844053* | ANTI-INFLAMMATORY MACROLIDE CONJUGATES |
| C 07H 19/04 | EP 1694642* | MUTAGENIC HETEROCYCLES |
| C 07H 19/23 | EP 1694642* | MUTAGENIC HETEROCYCLES |
| ***C 07H 21/04*** | EP 2046994* | EARLY DETECTION AND PROGNOSIS OF COLON CANCERS |
| ***C 07J 53/00*** | EP 1828223* | NOVEL BETULIN DERIVATIVES, PREPARATION THEREOF AND USE THEREOF |
| ***C 07J 63/00*** | EP 1828223* | NOVEL BETULIN DERIVATIVES, PREPARATION THEREOF AND USE THEREOF |
| ***C 07K 1/30*** | EP 1989219* | METHOD FOR THE MANUFACTURE OF LANTIBIOTICS |
| ***C 07K 5/06*** | EP 1778717* | CELL ADHESION INHIBITORS |
| ***C 07K 7/00*** | EP 1789081* | TREATMENT OF ATHEROSCLEROSIS |
| C 07K 14/165 | EP 1694830* | NOVEL ATYPICAL PNEUMONIA-CAUSING VIRUS |
| ***C 07K 14/195*** | EP 1874803* | CARRIER FOR TARGETING NERVE CELLS |
| ***C 07K 14/33*** | EP 1874803* | CARRIER FOR TARGETING NERVE CELLS |

| (51) | Broj objave evropske prijave patenta | (51) |
|---|---|---|
| C 07K 14/705 | EP 1745073* | CELL SURFACE RECEPTOR ISOFORMS AND METHODS OF IDENTIFYING AND USING THE SAME |
| ***C 07K 14/705*** | EP 1931783* | CHIMERIC HCN CHANNELS |
| C 07K 14/71 | EP 1745073* | CELL SURFACE RECEPTOR ISOFORMS AND METHODS OF IDENTIFYING AND USING THE SAME |
| C 07K 14/715 | EP 1745073* | CELL SURFACE RECEPTOR ISOFORMS AND METHODS OF IDENTIFYING AND USING THE SAME |
| C 07K 16/10 | EP 1694830* | NOVEL ATYPICAL PNEUMONIA-CAUSING VIRUS |
| ***C 07K 16/10*** | EP 2035454* | ANTIBODIES TO SARS CORONAVIRUS |
| ***C 07K 16/18*** | EP 2125890* | ANTIBODIES TO PHOSPHORYLATED-IRAK4 |
| C 07K 16/28 | EP 1715892* | METHODS AND COMPOSITIONS FOR MODULATING ANGIOGENESIS |
| ***C 07K 16/28*** | EP 1802660* | METHODS OF USING DEATH RECEPTOR LIGANDS AND CD20 ANTIBODIES |
| ***C 07K 16/28*** | EP 1844076* | ANTI-EPHB2 ANTIBODIES AND METHODS USING SAME |
| ***C 07K 16/28*** | EP 2001510* | METHODS OF TREATING LUPUS USING CD4 ANTIBODIES |
| ***C 07K 16/28*** | EP 2007812* | ERYTHROPOIETIN RECEPTOR AGONISTS |
| ***C 07K 16/30*** | EP 1844076* | ANTI-EPHB2 ANTIBODIES AND METHODS USING SAME |
| ***C 07K 16/40*** | EP 2125890* | ANTIBODIES TO PHOSPHORYLATED-IRAK4 |
| ***C 07K 19/00*** | EP 1957541* | COMPOSITIONS AND METHODS OF PRODUCING HYBRID ANTIGEN BINDING MOLECULES AND USES THEREOF |
| ***C 08J 5/00*** | EP 2196495 | Use of oxide-containing compositions to improve the barrier properties of polymer materials |
| ***C 08K 3/22*** | EP 1945568* | THERMALLY STABLE ALUMINUM HYDROXIDE PARTICLES AND THEIR USE AS FILLERS IN EPOXY LAMINATE RESINS |
| ***C 08K 3/36*** | EP 2196495 | Use of oxide-containing compositions to improve the barrier properties of polymer materials |
| ***C 08L 33/06*** | EP 1982760 | Pulverulent composition for absorbing aqueous liquids |
| ***C 09K 3/00*** | EP 1982760 | Pulverulent composition for absorbing aqueous liquids |
| ***C 09K 21/14*** | EP 1945568* | THERMALLY STABLE ALUMINUM HYDROXIDE PARTICLES AND THEIR USE AS FILLERS IN EPOXY LAMINATE RESINS |
| ***C 10L 5/00*** | EP 1951849* | PROCESS, SYSTEM AND APPARATUS FOR PASSIVATING CARBONACEOUS MATERIALS |
| ***C 10L 9/02*** | EP 1951849* | PROCESS, SYSTEM AND APPARATUS FOR PASSIVATING CARBONACEOUS MATERIALS |
| ***C 10L 9/08*** | EP 1951849* | PROCESS, SYSTEM AND APPARATUS FOR PASSIVATING CARBONACEOUS MATERIALS |
| ***C 10L 9/10*** | EP 1951849* | PROCESS, SYSTEM AND APPARATUS FOR PASSIVATING CARBONACEOUS MATERIALS |
| ***C 12M 1/34*** | EP 1825264* | METHODS AND DEVICES FOR DETECTING PANCREATIC LIPASE |
| ***C 12N 1/21*** | EP 1844076* | ANTI-EPHB2 ANTIBODIES AND METHODS USING SAME |
| C 12N 5/06 | EP 1738253* | SYSTEMS AND METHODS FOR PROVIDING A STEM CELL BANK |
| C 12N 5/10 | EP 1694830* | NOVEL ATYPICAL PNEUMONIA-CAUSING VIRUS |
| ***C 12N 5/10*** | EP 1844076* | ANTI-EPHB2 ANTIBODIES AND METHODS USING SAME |
| ***C 12N 5/10*** | EP 1931783* | CHIMERIC HCN CHANNELS |
| ***C 12N 5/12*** | EP 2125890* | ANTIBODIES TO PHOSPHORYLATED-IRAK4 |
| C 12N 7/00 | EP 1694830* | NOVEL ATYPICAL PNEUMONIA-CAUSING VIRUS |
| ***C 12N 7/02*** | EP 1694830* | NOVEL ATYPICAL PNEUMONIA-CAUSING VIRUS |
| ***C 12N 9/00*** | EP 2049151* | METHODS AND COMPOSITIONS FOR THE TREATMENT OF CANCER |
| ***C 12N 9/22*** | EP 2049151* | METHODS AND COMPOSITIONS FOR THE TREATMENT OF CANCER |
| ***C 12N 15/09*** | EP 2119706 | PYRIDINE OR PYRIMIDINE DERIVATIVE HAVING EXCELLENT CELL GROWTH INHIBITION EFFECT AND EXCELLENT ANTI-TUMOR EFFECT ON CELL STRAIN HAVING AMPLIFICATION OF HGFR GENE |
| ***C 12N 15/12*** | EP 1931783* | CHIMERIC HCN CHANNELS |

| (51) | Broj objave evropske prijave patenta | (51) |
|---|---|---|
| ***C 12N 15/13*** | EP 1844076* | ANTI-EPHB2 ANTIBODIES AND METHODS USING SAME |
| C 12N 15/63 | EP 1694830* | NOVEL ATYPICAL PNEUMONIA-CAUSING VIRUS |
| ***C 12N 15/63*** | EP 1931783* | CHIMERIC HCN CHANNELS |
| ***C 12N 15/82*** | EP 1877564* | INTERACTION OF GLYPHOSATE WITH PHOTOSYSTEM II INHIBITOR HERBICIDES AS A SELECTION TOOL FOR ROUNDUP READY EVENTS |
| ***C 12N 15/85*** | EP 1844076* | ANTI-EPHB2 ANTIBODIES AND METHODS USING SAME |
| ***C 12N 15/85*** | EP 2186402 | Knock-out animal models for novel genes and methods of use |
| ***C 12P 7/02*** | EP 2107909* | COMPOUNDS AND PHARMACEUTICAL COMPOSITIONS FOR THE TREATMENT OF LIVER DISORDERS |
| C 12P 7/06 | EP 1734834* | IMPROVED DISTILLATION PROCESS |
| C 12P 7/14 | EP 1734834* | IMPROVED DISTILLATION PROCESS |
| ***C 12P 19/34*** | EP 2046994* | EARLY DETECTION AND PROGNOSIS OF COLON CANCERS |
| ***C 12P 21/02*** | EP 1931783* | CHIMERIC HCN CHANNELS |
| ***C 12Q 1/34*** | EP 1825264* | METHODS AND DEVICES FOR DETECTING PANCREATIC LIPASE |
| ***C 12Q 1/68*** | EP 1781824* | NOVEL GENE DISRUPTIONS, COMPOSITIONS AND METHODS RELATING THERETO |
| ***C 12Q 1/68*** | EP 1818413 | Method of determining outcome of non small-cell lung cancer according to XRCC3 polymorphism |
| ***C 12Q 1/68*** | EP 2004854* | METHOD OF PREDICTING SURVIVAL OF A NON-SMALL-CELL LUNG CANCER PATIENT TO A CHEMOTHERAPEUTIC TREATMENT |
| ***C 12Q 1/68*** | EP 2046994* | EARLY DETECTION AND PROGNOSIS OF COLON CANCERS |
| ***C 12Q 1/68*** | EP 2119706 | PYRIDINE OR PYRIMIDINE DERIVATIVE HAVING EXCELLENT CELL GROWTH INHIBITION EFFECT AND EXCELLENT ANTI-TUMOR EFFECT ON CELL STRAIN HAVING AMPLIFICATION OF HGFR GENE |
| ***C 12Q 1/68*** | EP 2130928 | Nucleic acids and methods for detecting turfgrass pathogenic fungi |
| ***C 22C 5/04*** | EP 1913167* | PLATINUM ALLOY AND METHOD OF PRODUCTION THEREOF |
| ***D 06M 17/00*** | EP 1896649* | LIQUID IMPERMEABLE MATERIAL |
| ***D 06N 3/06*** | EP 1896649* | LIQUID IMPERMEABLE MATERIAL |
| ***E 04B 1/26*** | EP 1896669* | HOLLOW U-SHAPED SECTION AND MODULE FOR THE RAPID ASSEMBLY OF PIECES OF TIMBER, WHICH IS INTENDED, IN PARTICULAR, FOR THE CONSTRUCTION OF BUILDING STRUCTURES OR FRAMES, AND PRODUCTION METHOD THEREOF |
| ***E 04B 1/58*** | EP 1896669* | HOLLOW U-SHAPED SECTION AND MODULE FOR THE RAPID ASSEMBLY OF PIECES OF TIMBER, WHICH IS INTENDED, IN PARTICULAR, FOR THE CONSTRUCTION OF BUILDING STRUCTURES OR FRAMES, AND PRODUCTION METHOD THEREOF |
| ***E 04C 2/52*** | EP 2027350* | A COMPOSITE INSULATING PANEL |
| ***E 05F 15/00*** | EP 1917647* | SYSTEM AND METHODS FOR AUTOMATICALLY MOVING ACCESS BARRIERS INITIATED BY MOBILE TRANSMITTER DEVICES |
| ***F 01N 3/20*** | EP 2017442 | Adaptive reductant dosing and emission control strategies |
| ***F 01N 11/00*** | EP 2017442 | Adaptive reductant dosing and emission control strategies |
| ***F 16B 7/22*** | EP 1812281* | RELEASABLE SECURING APPARATUS AND METHOD OF USING SAME |
| ***F 16C 11/00*** | EP 2007992* | COMBINATION CYLINDRICAL AND SPHERICAL JOINT |
| F 16L 45/00 | EP 1756507* | BALL TRAP WITH SAFETY-RELEASE GATE |
| F 16L 55/00 | EP 1756507* | BALL TRAP WITH SAFETY-RELEASE GATE |
| ***F 21S 8/08*** | EP 2133622 | Street lighting apparatus with multiple LED-light sources |
| ***F 21V 19/00*** | EP 2133622 | Street lighting apparatus with multiple LED-light sources |
| ***F 21Y 101/02*** | EP 2133622 | Street lighting apparatus with multiple LED-light sources |

| (51) | Broj objave evropske prijave patenta | (51) |
|---|---|---|
| ***F 23J 1/00*** | EP 2156098* | SYSTEM FOR DRY EXTRACTING / COOLING HETEROGENEOUS MATERIAL ASHES WITH CONTROL OF THE AIR INLET IN THE COMBUSTION CHAMBER |
| ***F 24D 3/16*** | EP 2027350* | A COMPOSITE INSULATING PANEL |
| ***F 24D 5/10*** | EP 2027350* | A COMPOSITE INSULATING PANEL |
| ***F 25D 23/00*** | EP 1828696* | TEMPERATURE COOLER FOR RAPID COOLING AND/OR RAPID FREEZING OF PRODUCTS TO BE STORED AT LOW TEMPERATURE FOR DOMESTIC USE |
| ***F 25D 23/10*** | EP 1828696* | TEMPERATURE COOLER FOR RAPID COOLING AND/OR RAPID FREEZING OF PRODUCTS TO BE STORED AT LOW TEMPERATURE FOR DOMESTIC USE |
| F 28F 13/12 | EP 1756507* | BALL TRAP WITH SAFETY-RELEASE GATE |
| F 28F 19/00 | EP 1756507* | BALL TRAP WITH SAFETY-RELEASE GATE |
| G 01K 3/04 | EP 1754035* | RECORDING AND STORING A TEMPERATURE |
| G 01K 7/00 | EP 1754035* | RECORDING AND STORING A TEMPERATURE |
| ***G 01N 30/02*** | EP 2027089* | IMPURITIES OF DONEPEZIL |
| ***G 01N 30/10*** | EP 1781125* | ULTRA-FINE PARTICLE CATALYSTS FOR CARBONACEOUS FUEL ELEMENTS |
| ***G 01N 30/72*** | EP 1781125* | ULTRA-FINE PARTICLE CATALYSTS FOR CARBONACEOUS FUEL ELEMENTS |
| ***G 01N 30/90*** | EP 2027089* | IMPURITIES OF DONEPEZIL |
| ***G 01N 31/22*** | EP 1943254* | REAGENTS FOR HIGHLY SPECIFIC DETECTION OF PEROXYNITRITE |
| ***G 01N 33/00*** | EP 2186402 | Knock-out animal models for novel genes and methods of use |
| ***G 01N 33/15*** | EP 2027089* | IMPURITIES OF DONEPEZIL |
| ***G 01N 33/15*** | EP 2119706 | PYRIDINE OR PYRIMIDINE DERIVATIVE HAVING EXCELLENT CELL GROWTH INHIBITION EFFECT AND EXCELLENT ANTI-TUMOR EFFECT ON CELL STRAIN HAVING AMPLIFICATION OF HGFR GENE |
| ***G 01N 33/48*** | EP 2119706 | PYRIDINE OR PYRIMIDINE DERIVATIVE HAVING EXCELLENT CELL GROWTH INHIBITION EFFECT AND EXCELLENT ANTI-TUMOR EFFECT ON CELL STRAIN HAVING AMPLIFICATION OF HGFR GENE |
| G 01N 33/50 | EP 1761772* | NEW INTRAVENOUS DRUG ADMINISTRATION AND BLOOD SAMPLING MODEL IN THE AWAKE RAT |
| ***G 01N 33/50*** | EP 1877564* | INTERACTION OF GLYPHOSATE WITH PHOTOSYSTEM II INHIBITOR HERBICIDES AS A SELECTION TOOL FOR ROUNDUP READY EVENTS |
| ***G 01N 33/50*** | EP 2119706 | PYRIDINE OR PYRIMIDINE DERIVATIVE HAVING EXCELLENT CELL GROWTH INHIBITION EFFECT AND EXCELLENT ANTI-TUMOR EFFECT ON CELL STRAIN HAVING AMPLIFICATION OF HGFR GENE |
| ***G 01N 33/53*** | EP 2119706 | PYRIDINE OR PYRIMIDINE DERIVATIVE HAVING EXCELLENT CELL GROWTH INHIBITION EFFECT AND EXCELLENT ANTI-TUMOR EFFECT ON CELL STRAIN HAVING AMPLIFICATION OF HGFR GENE |
| ***G 01N 33/53*** | EP 2125890* | ANTIBODIES TO PHOSPHORYLATED-IRAK4 |
| ***G 01N 33/566*** | EP 2125890* | ANTIBODIES TO PHOSPHORYLATED-IRAK4 |
| G 01N 33/569 | EP 1694830* | NOVEL ATYPICAL PNEUMONIA-CAUSING VIRUS |
| ***G 01N 33/569*** | EP 2141498 | Cellular COPD diagnosis |
| ***G 01N 33/569*** | EP 2173438* | TREATMENTS AND DIAGNOSTICS FOR CANCER, INFLAMMATORY DISORDERS AND AUTOIMMUNE DISORDERS |
| ***G 01N 33/573*** | EP 2125890* | ANTIBODIES TO PHOSPHORYLATED-IRAK4 |
| ***G 01N 33/574*** | EP 1844076* | ANTI-EPHB2 ANTIBODIES AND METHODS USING SAME |
| ***G 01N 33/574*** | EP 2119706 | PYRIDINE OR PYRIMIDINE DERIVATIVE HAVING EXCELLENT CELL GROWTH INHIBITION EFFECT AND EXCELLENT ANTI-TUMOR EFFECT ON CELL STRAIN HAVING AMPLIFICATION OF HGFR GENE |

| (51) | Broj objave evropske prijave patenta | (51) |
|---|---|---|
| ***G 01N 33/574*** | EP 2173438* | TREATMENTS AND DIAGNOSTICS FOR CANCER, INFLAMMATORY DISORDERS AND AUTOIMMUNE DISORDERS |
| ***G 01N 33/577*** | EP 1844076* | ANTI-EPHB2 ANTIBODIES AND METHODS USING SAME |
| ***G 01N 33/68*** | EP 2125890* | ANTIBODIES TO PHOSPHORYLATED-IRAK4 |
| ***G 01R 15/14*** | EP 1761786* | ELECTRIC POWER MONITORING AND RESPONSE SYSTEM |
| ***G 01R 21/133*** | EP 1899736* | SYSTEMS AND METHODS FOR UTILITY METER DEMAND DATA COLLECTION |
| ***G 02B 6/44*** | EP 2010952* | ALUMINUM ALLOYS FOR ARMORED CABLES |
| ***G 03F 7/20*** | EP 1843204 | EXPOSURE DEVICE, EXPOSURE METHOD, AND MICRO DEVICE MANUFACTURING METHOD |
| ***G 03F 7/20*** | EP 1865381 | EXPOSURE APPARATUS, METHOD FOR MANUFACTURING EXPOSURE APPARATUS, AND METHOD FOR MANUFACTURING MICRODEVICE |
| G 06F 1/00 | EP 1711897* | DEBUGGING PORT SECURITY INTERFACE |
| ***G 06F 3/023*** | EP 2259167 | System and method for applying a text prediction algorithm to a virtual keyboard |
| ***G 06F 3/033*** | EP 1818773 | Lockable keyboard for a handheld communication device |
| ***G 06F 3/033*** | EP 1818774 | Lockable keyboard for a handheld communication device having a full alphabetic keyboard |
| ***G 06F 3/033*** | EP 1818775 | Lockable keyboard for a wireless handheld communication device |
| ***G 06F 3/033*** | EP 1818776 | Lockable keyboard for a handheld communication device having a reduced alphabetic keyboard |
| ***G 06F 3/048*** | EP 2259167 | System and method for applying a text prediction algorithm to a virtual keyboard |
| G 06F 3/06 | EP 1716478* | SYSTEM AND METHOD FOR LUN CLONING |
| G 06F 3/14 | EP 1723505* | RESTRICTED USER INTERFACE NAVIGATION |
| ***G 06F 9/44*** | EP 1712994 | System and method for transformation of an application definition |
| ***G 06F 9/44*** | EP 1872205* | SYSTEM AND METHOD FOR EFFICIENT HOSTING OF WIRELESS APPLICATIONS BY ENCODING APPLICATION COMPONENT DEFINITIONS |
| ***G 06F 9/445*** | EP 2140349* | UPGRADING SERVICES ASSOCIATED WITH HIGH AVAILABILITY SYSTEMS |
| ***G 06F 9/45*** | EP 1712994 | System and method for transformation of an application definition |
| ***G 06F 9/46*** | EP 1712994 | System and method for transformation of an application definition |
| G 06F 11/36 | EP 1711897* | DEBUGGING PORT SECURITY INTERFACE |
| G 06F 12/14 | EP 1711897* | DEBUGGING PORT SECURITY INTERFACE |
| ***G 06F 13/42*** | EP 2054810* | MAC AND PHY INTERFACE ARRANGEMENT |
| ***G 06F 17/10*** | EP 2179401* | MODELING THE MOTION OF AN ARTICULATED OBJECT |
| ***G 06F 17/27*** | EP 2165271* | TIME-ORDERED TEMPLATES FOR TEXT-TO-ANIMATION SYSTEM |
| ***G 06F 17/30*** | EP 1657655 | Method, system and computer program product for reference categorization and/or reference particulars mining |
| G 06F 17/30 | EP 1723505* | RESTRICTED USER INTERFACE NAVIGATION |
| G 06F 17/30 | EP 1763800* | DEFINING A DATA DEPENDENCY PATH THROUGH A BODY OF RELATED DATA |
| ***G 06F 17/30*** | EP 1839211* | LOCAL ITEM EXTRACTION |
| ***G 06F 17/30*** | EP 1872205* | SYSTEM AND METHOD FOR EFFICIENT HOSTING OF WIRELESS APPLICATIONS BY ENCODING APPLICATION COMPONENT DEFINITIONS |
| G 06F 19/00 | EP 1738253* | SYSTEMS AND METHODS FOR PROVIDING A STEM CELL BANK |
| ***G 06F 19/00*** | EP 2162843* | SYSTEM AND A METHOD FOR GENERATING A QUANTITATIVE MEASURE REFLECTING THE SEVERITY OF A MEDICAL CONDITION |
| ***G 06F 19/00*** | EP 2165271* | TIME-ORDERED TEMPLATES FOR TEXT-TO-ANIMATION SYSTEM |
| ***G 06F 19/00*** | EP 2263349* | SYSTEM FOR THE DOCUMENT-BASED DATA EXCHANGE BETWEEN AT LEAST TWO DATA CARRIERS BY WAY OF PAPER OR REMOTE DATA TRANSMISSION |

| (51) | Broj objave evropske prijave patenta | (51) |
|---|---|---|
| ***G 06F 21/20*** | EP 1852801 | Updating certificate status in a system and method for processing certificates located in a certificate search |
| ***G 06F 21/20*** | EP 1930835 | System and method for locking and unlocking access to an electronic device |
| ***G 06K 9/00*** | EP 1889205* | HUMAN DETECTION AND TRACKING FOR SECURITY APPLICATIONS |
| ***G 06Q 10/00*** | EP 2169600 | Method and apparatus for controlling an electronic device |
| ***G 06Q 10/00*** | EP 2199957 | Method and system for coordinating data records across a plurality of computing devices |
| ***G 06Q 10/00*** | EP 2218041* | SYSTEM FOR THE VISUAL DISPLAY OF CLEAVING PROCESS DATA IN MEAT PROCESSING |
| ***G 06Q 30/00*** | EP 1899736* | SYSTEMS AND METHODS FOR UTILITY METER DEMAND DATA COLLECTION |
| ***G 06Q 30/00*** | EP 2171665* | A METHOD AND SYSTEM OF PROCESSING TELEPHONE CALLS INVOLVING TARGETED COMMERCIALS |
| ***G 06T 13/00*** | EP 2165271* | TIME-ORDERED TEMPLATES FOR TEXT-TO-ANIMATION SYSTEM |
| ***G 06T 13/00*** | EP 2179401* | MODELING THE MOTION OF AN ARTICULATED OBJECT |
| ***G 06T 15/70*** | EP 2165271* | TIME-ORDERED TEMPLATES FOR TEXT-TO-ANIMATION SYSTEM |
| ***G 06T 15/70*** | EP 2179401* | MODELING THE MOTION OF AN ARTICULATED OBJECT |
| ***G 07C 5/00*** | EP 2017442 | Adaptive reductant dosing and emission control strategies |
| ***G 07C 9/00*** | EP 1917647* | SYSTEM AND METHODS FOR AUTOMATICALLY MOVING ACCESS BARRIERS INITIATED BY MOBILE TRANSMITTER DEVICES |
| ***G 07C 9/00*** | EP 2137706* | UNIVERSAL KEY AND MECCHANICAL-ELECTRONIC LOCK WITH STANDARDISABLE COMPONENTS |
| ***G 07F 11/36*** | EP 2193508* | VENDING MACHINE FOR MEDICINES |
| G 07F 17/32 | EP 1763854* | APPARATUS FOR DECREASING THE CIRCULATION OF MONEY OF SMALL DENOMINATIONS, ARRANGEMENT AND METHOD FOR DRAWING LOTS |
| G 07G 1/00 | EP 1763854* | APPARATUS FOR DECREASING THE CIRCULATION OF MONEY OF SMALL DENOMINATIONS, ARRANGEMENT AND METHOD FOR DRAWING LOTS |
| ***G 09F 13/34*** | EP 1739644 | Advertising display panel with image updating and improvements for said display panel. |
| ***G 11C 16/06*** | EP 2038892* | FLASH MEMORY DEVICE HAVING A FLASH CACHE PORTION AND A METHOD FOR USING THE SAME |
| ***G 11C 16/26*** | EP 2038892* | FLASH MEMORY DEVICE HAVING A FLASH CACHE PORTION AND A METHOD FOR USING THE SAME |
| ***H 01L 21/027*** | EP 1843204 | EXPOSURE DEVICE, EXPOSURE METHOD, AND MICRO DEVICE MANUFACTURING METHOD |
| ***H 01L 21/027*** | EP 1865381 | EXPOSURE APPARATUS, METHOD FOR MANUFACTURING EXPOSURE APPARATUS, AND METHOD FOR MANUFACTURING MICRODEVICE |
| ***H 01L 21/28*** | EP 2044619* | DOUBLE GATE TRANSISTOR AND METHOD OF MANUFACTURING SAME |
| ***H 01L 21/8247*** | EP 2044619* | DOUBLE GATE TRANSISTOR AND METHOD OF MANUFACTURING SAME |
| ***H 01L 27/115*** | EP 2044619* | DOUBLE GATE TRANSISTOR AND METHOD OF MANUFACTURING SAME |
| ***H 01L 29/423*** | EP 2044619* | DOUBLE GATE TRANSISTOR AND METHOD OF MANUFACTURING SAME |
| H 01M 4/86 | EP 1769557* | PROCESSING TECHNIQUES FOR THE FABRICATION OF SOLID ACID FUEL CELL MEMBRANE ELECTRODE ASSEMBLIES |
| H 01M 4/88 | EP 1769557* | PROCESSING TECHNIQUES FOR THE FABRICATION OF SOLID ACID FUEL CELL MEMBRANE ELECTRODE ASSEMBLIES |

| (51) | Broj objave evropske prijave patenta | (51) |
|---|---|---|
| H 01M 8/08 | EP 1769557* | PROCESSING TECHNIQUES FOR THE FABRICATION OF SOLID ACID FUEL CELL MEMBRANE ELECTRODE ASSEMBLIES |
| H 01R 4/50 | EP 1756915* | ELECTRICAL WEDGE CONNECTOR |
| ***H 02B 1/56*** | EP 2018690* | ELECTRICAL CABINET WITH TWO COOLING CHANNELS |
| ***H 02G 1/02*** | EP 1761786* | ELECTRIC POWER MONITORING AND RESPONSE SYSTEM |
| ***H 02J 1/00*** | EP 1941595* | DIODE POWER ARRAY |
| ***H 02K 5/15*** | EP 1995853 | Electric Motor |
| ***H 02K 5/16*** | EP 1995853 | Electric Motor |
| ***H 02K 11/00*** | EP 1995853 | Electric Motor |
| ***H 03H 9/02*** | EP 1894297* | FILM BULK ACOUSTIC WAVE RESONATOR WITH DIFFERENTIAL TOPOLOGY |
| ***H 03H 9/17*** | EP 1894297* | FILM BULK ACOUSTIC WAVE RESONATOR WITH DIFFERENTIAL TOPOLOGY |
| ***H 03H 9/56*** | EP 1894297* | FILM BULK ACOUSTIC WAVE RESONATOR WITH DIFFERENTIAL TOPOLOGY |
| ***H 03H 9/58*** | EP 1894297* | FILM BULK ACOUSTIC WAVE RESONATOR WITH DIFFERENTIAL TOPOLOGY |
| ***H 03M 7/30*** | EP 1872205* | SYSTEM AND METHOD FOR EFFICIENT HOSTING OF WIRELESS APPLICATIONS BY ENCODING APPLICATION COMPONENT DEFINITIONS |
| ***H 04B 1/38*** | EP 1805901* | WIRELESS INTERACTIVE MULTI-USER DISPLAY SYSTEM AND METHOD |
| ***H 04B 1/40*** | EP 2039015* | DUAL BAND RECEIVER WITH CONTROL MEANS FOR PREVENTING SIGNAL OVERLOADING |
| ***H 04B 7/08*** | EP 2039015* | DUAL BAND RECEIVER WITH CONTROL MEANS FOR PREVENTING SIGNAL OVERLOADING |
| ***H 04L 9/18*** | EP 2263349* | SYSTEM FOR THE DOCUMENT-BASED DATA EXCHANGE BETWEEN AT LEAST TWO DATA CARRIERS BY WAY OF PAPER OR REMOTE DATA TRANSMISSION |
| H 04L 9/32 | EP 1757012* | RE-ROUTING METHOD AND SYSTEM |
| ***H 04L 12/16*** | EP 1872526* | SYSTEM AND METHOD FOR CUSTOMIZING SERVICES FOR APPLICATIONS |
| ***H 04L 12/24*** | EP 2027677* | EMAIL SERVER SYSTEM AND METHOD |
| H 04L 12/26 | EP 1745595* | EFFICIENT PROTECTION MECHANISMS IN A RING TOPOLOGY NETWORK UTILIZING LABEL SWITCHING PROTOCOLS |
| H 04L 12/28 | EP 1757012* | RE-ROUTING METHOD AND SYSTEM |
| ***H 04L 12/437*** | EP 1790132* | DISTRIBUTED COMMUNICATION SYSTEM USING TWO COMMUNICATION CONTROLLERS AS WELL AS METHOD FOR OPERATING SUCH COMMUNICATION SYSTEM |
| ***H 04L 12/54*** | EP 2005680* | A METHOD AND SYSTEM FOR SMART ROUTE DIALLING TO A DESTINATION IDENTIFIER USING A TELEPHONE |
| ***H 04L 12/58*** | EP 2040426 | System and method for controlling message attachment handling functions on a mobile device |
| ***H 04L 12/66*** | EP 1872526* | SYSTEM AND METHOD FOR CUSTOMIZING SERVICES FOR APPLICATIONS |
| ***H 04L 12/66*** | EP 2005680* | A METHOD AND SYSTEM FOR SMART ROUTE DIALLING TO A DESTINATION IDENTIFIER USING A TELEPHONE |
| ***H 04L 27/26*** | EP 1994701* | IDENTIFICATION OF MAXIMUM CYCLIC DELEY IN AN OFDM SYSTEM BASED ON COHERENCE BANDWITH OF THE CHANNEL |
| H 04L 29/06 | EP 1757012* | RE-ROUTING METHOD AND SYSTEM |
| ***H 04L 29/06*** | EP 2005680* | A METHOD AND SYSTEM FOR SMART ROUTE DIALLING TO A DESTINATION IDENTIFIER USING A TELEPHONE |
| ***H 04L 29/06*** | EP 2018012 | An interactive system designed for the supply or submission of general information as well as advertising, marketing and other material through electronic communication technologies, either in connection or in line with location-based services, with the |

| (51) | Broj objave evropske prijave patenta | (51) |
|---|---|---|
| ***H 04L 29/06*** | EP 2040426 | System and method for controlling message attachment handling functions on a mobile device |
| ***H 04L 29/06*** | EP 2263349* | SYSTEM FOR THE DOCUMENT-BASED DATA EXCHANGE BETWEEN AT LEAST TWO DATA CARRIERS BY WAY OF PAPER OR REMOTE DATA TRANSMISSION |
| ***H 04L 29/08*** | EP 2018012 | An interactive system designed for the supply or submission of general information as well as advertising, marketing and other material through electronic communication technologies, either in connection or in line with location-based services, with the |
| ***H 04L 29/14*** | EP 1790132* | DISTRIBUTED COMMUNICATION SYSTEM USING TWO COMMUNICATION CONTROLLERS AS WELL AS METHOD FOR OPERATING SUCH COMMUNICATION SYSTEM |
| ***H 04M 1/00*** | EP 1805901* | WIRELESS INTERACTIVE MULTI-USER DISPLAY SYSTEM AND METHOD |
| ***H 04M 11/06*** | EP 2005680* | A METHOD AND SYSTEM FOR SMART ROUTE DIALLING TO A DESTINATION IDENTIFIER USING A TELEPHONE |
| ***H 04N 7/26*** | EP 1894415* | VIDEO DECODER WITH HYBRID REFERENCE TEXTURE |
| ***H 04Q 3/64*** | EP 2005680* | A METHOD AND SYSTEM FOR SMART ROUTE DIALLING TO A DESTINATION IDENTIFIER USING A TELEPHONE |
| ***H 04Q 7/22*** | EP 1872526* | SYSTEM AND METHOD FOR CUSTOMIZING SERVICES FOR APPLICATIONS |
| ***H 04Q 7/34*** | EP 1872526* | SYSTEM AND METHOD FOR CUSTOMIZING SERVICES FOR APPLICATIONS |
| ***H 04Q 7/38*** | EP 2005680* | A METHOD AND SYSTEM FOR SMART ROUTE DIALLING TO A DESTINATION IDENTIFIER USING A TELEPHONE |
| ***H 05B 3/26*** | EP 2081413 | HEATING PLATE AND METHOD FOR MANUFACTURING IT |
| ***H 05K 1/18*** | EP 2133622 | Street lighting apparatus with multiple LED-light sources |

# Жигови / Trademarks

**Међународни кодови за идентификацију библиографских података о жиговима према - WIPO ST. 60**

**Recommendation concerning bibliographic data relating to trademarks - WIPO ST. 60**

| | | |
|---|---|---|
| Регистарски број | **(111)** | Number of the registration |
| Датум регистрације | **(151)** | Date of the registration |
| Очекивани датум престанка важеwa жига | **(181)** | Expected expiration date of the registration |
| Број пријаве | **(210)** | Number of the application |
| Датум подношења пријаве | **(220)** | Date of filing of the application |
| Подаци о изложбеном праву првенства | **(230)** | Data concerning exhibitions |
| Подаци о праву првенства на основу Париске конвенције | **(300)** | Data relating to priority under the Paris Convention |
| Списак роба и услуга према Ничанској класификацији роба и услуга | **(511)** | List of goods and services according the Nice Classification of Goods and Service |
| Изјава подносиоца пријаве да не тражи ексклузивно право за поједине нединстиктивне елементе знака | **(526)** | Disclaimer |
| Опис фигуративних елемената жига према Бечкој класификацији | **(531)** | Description of figurative elements of the marks according to the Vienna Classification |
| Изглед знака | **(540)** | Reproduction of the mark |
| Назнака о природи или врсти знака | **(550)** | Indication relating to the nature or kind of mark |
| Информација о затраженим бојама на знаку | **(591)** | Information concerning the colors claimed |
| Име и адреса носиоца жига | **(732)** | Name and address of the holder of the registration |
| Име и адреса пуномоћника | **(740)** | Name and address of the representative |

## РЕГИСТРОВАНИ ЖИГОВИ

REGISTRATED TRADEMARKS

(111) **62501** (181) **27.02.2018.**
(210) Ж- 2008-394 (220) 27.02.2008.
(151) 25.03.2011.
(300) 27.02.2008.
(732) **VULCANO D.O.O. BEOGRAD**;
Strahinjića Bana br. 59, Beograd-Stari Grad, RS
(740) Тамара Велицки, Београд, Стевана Сремца 6
(540)

(531) 05.03.13; 05.03.16; 26.01.15; 27.05.01; 27.05.07; 27.05.10; 27.05.17; 29.01.13
(591) црвена, бела, црна
(511) Кл. 30: кафа, чај, какао, шећер, пиринач, тапиока, саго, замена кафе, брашно и производи од житарица, хлеб, колачи, послалстице, сладоледи, мед, меласа, квасац, прашак за пециво, со, сенф, сирће, сосови (као зачини), лед.
Кл. 31: свеже воће и поврће.
Кл. 43: услуге обезбеђивања хране и пића.

(111) **62502** (181) **21.10.2019.**
(210) Ж- 2009-1597 (220) 21.10.2009.
(151) 28.03.2011.
(300) 21.10.2009.56271 08.06.2009. CH
(732) **PMPI LLC**; 9711 Farrar Court, Richmond 23236, Virginia, US
(740) "Карановић & Николић" ОД, мр Драгомир Којић, адвокат, Лепеничка 7, 11000 Београд
(540)

MARLBORO CLASSICS

(511) Кл. 14: драгоцени метали и њихове легуре и производи од драгоцених метала или са превлаком од њих, који нису укључени у друге класе; накит, драго камење; часовничарски и хронометријски инструменти.
Кл. 16: хартија, картон и производи од њих, који нису укључени у друге класе; штампане ствари; књиговезачки материјал; фотографије; канцеларијски материјал; лепила за канцеларијске и кућне потребе; уметнички материјали; кичице; писаће машине и канцеларијски реквизити (изузев намештаја); материјали за обуку и наставу (изузев апарата); пластични материјал за паковање (који није укључен у друге класе); штампарска слова; клишеи.
Кл. 18: кожа и имитација коже, и производи израђени од ових материјала који нису укључени у друге класе; животињска кожа, крзно; кофери и путне торбе; кишобрани, сунцобрани и штапови за ходање; бичеви, сарачка и седларска опрема.
Кл. 25: одећа, обућа, покривала за главу.
Кл. 28: игре и играчке; гимнастичарски и спортски артикли који нису обухваћени другим класама; украси за јелке.
Кл. 35: оглашавање; вођење послова; пословно управљање; канцеларијски послови.

(111) **62503** (181) **30.09.2020.**
(210) Ж- 2010-1625 (220) 30.09.2010.
(151) 28.03.2011.
(300) 30.09.2010.
(732) **Javno preduzeće Službeni glasnik**; 11000 Beograd, Jovana Ristića 1, RS
(540)

(531) 26.01.16; 26.02.07; 26.03.23; 27.01.15
(591) светло плава, бела, црна
(511) Кл. 16: хартија, картон и производи од њих, који нису укључени у друге класе; штампане ствари; књиговезачки материјал; фотографије; канцеларијски материјал; лепила за канцеларијске и кућне потребе; уметнички материјали; кичице; писаће машине и канцеларијски реквизити (изузев намештаја); материјали за обуку и наставу (изузев апарата); пластични материјал за паковање (који није укључен у друге класе); штампарска слова; клишеи.
Кл. 35: оглашавање; вођење послова; пословно управљање; канцеларијски послови.
Кл. 41: образовне услуге; припремање обуке; разонода; спортске и културне активности.

(111) **62504** (181) **01.10.2020.**
(210) Ж- 2010-1630 (220) 01.10.2010.
(151) 28.03.2011.
(300) 01.10.2010.
(732) **Javno preduzeće Službeni glasnik**; 11000 Beograd, Jovana Ristića 6, RS
(540)

(531) 27.05.01; 27.05.10; 27.05.17; 28.05.00
(511) Кл. 16: хартија, картон и производи од њих, који нису укључени у друге класе; штампане ствари; књиговезачки материјал; фотографије; канцеларијски материјал; лепила за канцеларијске и кућне потребе; уметнички материјали; кичице; писаће машине и канцеларијски реквизити (изузев намештаја); материјали за обуку и наставу (изузев апарата); пластични материјал за паковање (који није укључен у друге класе); штампарска слова; клишеи.
Кл. 35: оглашавање; вођење послова; пословно управљање; канцеларијски послови.
Кл. 41: образовне услуге; припремање обуке; разонода; спортске и културне активности.

(111) **62505** (181) **01.10.2020.**
(210) Ж- 2010-1629 (220) 01.10.2010.
(151) 28.03.2011.
(300) 01.10.2010.
(732) **Javno preduzeće Službeni glasnik**; 11000 Beograd, Jovana Ristića 1, RS
(540)

(531) 27.05.01; 27.05.09; 27.05.10
(511) Кл. 16: хартија, картон и производи од њих, који нису укључени у друге класе; штампане ствари; књиговезачки материјал; фотографије; канцеларијски материјал; лепила за канцеларијске и кућне потребе; уметнички материјали; кичице; писаће машине и канцеларијски реквизити (изузев намештаја); материјали за обуку и наставу (изузев апарата); пластични материјал за паковање (који није укључен у друге класе); штампарска слова; клишеи.
Кл. 35: оглашавање; вођење послова; пословно управљање; канцеларијски послови.
Кл. 41: образовне услуге; припремање обуке; разонода; спортске и културне активности.

(111) **62506** (181) **01.10.2020.**
(210) Ж- 2010-1631 (220) 01.10.2010.
(151) 28.03.2011.
(300) 01.10.2010.
(732) **Javno preduzeće Slubžebni glasnik**; 11000 Beorad, Jovana Ristića 1, RS
(540)

(531) 25.01.09; 27.05.01; 27.05.10
(511) Кл. 16: хартија, картон и производи од њих, који нису укључени у друге класе; штампане ствари; књиговезачки материјал; фотографије; канцеларијски материјал; лепила за канцеларијске и кућне потребе; уметнички материјали; кичице; писаће машине и канцеларијски реквизити (изузев намештаја); материјали за обуку и наставу (изузев апарата); пластични материјал за паковање (који није укључен у друге класе); штампарска слова; клишеи.
Кл. 35: оглашавање; вођење послова; пословно управљање; канцеларијски послови.
Кл. 41: образовне услуге; припремање обуке; разонода; спортске и културне активности.

(111) **62507** (181) **20.05.2020.**
(210) Ж- 2010-860 (220) 20.05.2010.
(151) 28.03.2011.
(300) 20.05.2010.
(732) **SZTR IMPACTO, Preduzetnik Tijana Živko**; Subotica, Staniše Neorčića 10, RS
(540)

(531) 26.04.01; 26.04.18; 27.05.01; 27.05.24
(511) Кл. 25: тренерке, мајице, дуксеви, шорцеви, поткошуље, дукс јакне, доњи део тренерке, 3/4 доњи делови, сукње, хаљине, хеланке.

(111) **62508** (181) **01.04.2020.**
(210) Ж- 2010-534 (220) 01.04.2010.
(151) 28.03.2011.
(300) 01.04.2010.
(732) **Aleksandar Diklić and Stefan Diklić**; Beograd - Borča, Popova bara nova 1402 002, RS and 11000 Beograd, Omorika 5, RS
(740) Милан Петровић, Тадеуша Кошћушка 8,Београд

(540)

(531) 01.15.01; 03.02.01; 03.02.24; 26.02.07; 26.11.12; 27.05.01; 29.01.04
(591) плава, бела
(511) Кл. 3: етерична уља, козметика, лосиони за косу.
Кл. 5: фармацеутски и ветеринарски препарати; санитарни препарати за медицинску употребу; дијететске супстанце прилагођене за употребу у медицини, храна за бебе; фластери, материјали за завијање; дезинфекциона средства.
Кл. 30: кафа, чај, замена кафе.
Кл. 44: медицинске услуге; ветеринарске услуге; хигијенска заштита и нега лепоте за људе или животиње.

---

(111) **62509** (181) **30.09.2020.**
(210) Ж- 2010-1624 (220) 30.09.2010.
(151) 28.03.2011.
(300) 30.09.2010.
(732) **Javno preduzeće Službeni glasnik**; 11000 Beograd, Jovana Ristića 1, RS
(540)

(531) 26.01.16; 26.02.07; 26.03.23; 29.01.13
(591) жута, бела, црна
(511) Кл. 16: хартија, картон и производи од њих, који нису укључени у друге класе; штампане ствари; књиговезачки материјал; фотографије; канцеларијски материјал; лепила за канцеларијске и кућне потребе; уметнички материјали; кичице; писаће машине и канцеларијски реквизити (изузев намештаја); материјали за обуку и наставу (изузев апарата); пластични материјал за паковање (који није укључен у друге класе); штампарска слова; клишеи.
Кл. 35: оглашавање; вођење послова; пословно управљање; канцеларијски послови.
Кл. 41: образовне услуге; припремање обуке; разонода; спортске и културне активности.

(111) **62510** (181) **05.10.2020.**
(210) Ж- 2010-1647 (220) 05.10.2010.
(151) 28.03.2011.
(300) 05.10.2010.
(732) **Giga-Byte Technology Co. Ltd.**; No. 6, Bau Chiang Rd. Hsin-Tien, Taipei 231, TW
(740) Слободан Влаховић, адвокат, 11070 Нови Београд, Радоја Дакића 35/32
(540)

Booktop

(511) Кл. 9: компјутери; лап топ компјутери; перфиерни уређаји за компјутер.
Кл. 35: услуге увозно-извозних агенција; услуге промовисања продаје за друге.
Кл. 37: услуге инсталирања, одржавања и поправке компјутерске опреме (хардвер).

---

(111) **62511** (181) **05.10.2020.**
(210) Ж- 2010-1651 (220) 05.10.2010.
(151) 28.03.2011.
(300) 05.10.2010.
(732) **Giga-Byte Technology Co. Ltd.**; No. 6, Bau Chiang Rd. Hsin-Tien, Taipei 231, TW
(740) Слободан Влаховић, адвокат, 11070 Нови Београд, Радоја Дакића 35/32
(540)

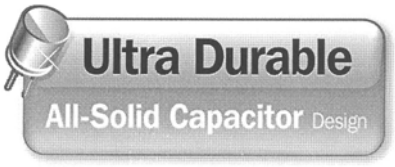


(531) 15.09.10; 26.04.02; 26.04.07; 26.04.18; 27.05.01; 27.05.10; 27.05.24
(511) Кл. 9: матичне плоче; VGA картице.
Кл. 35: услуге увозно-извозних агенција; услуге промовисања продаје за друге.
Кл. 37: услуге инсталирања, одржавања и поправке компјутерске опреме (хардвер).

---

(111) **62512** (181) **23.09.2020.**
(210) Ж- 2010-1576 (220) 23.09.2010.
(151) 28.03.2011.
(300) 23.09.2010.
(732) **EKO SERBIA A.D. Beograd**; Tošin bunar 274a, 11070 Novi Beograd, RS
(540)

(531) 07.11.10; 18.05.01; 18.05.03; 27.01.01; 27.03.15; 27.05.01; 27.05.02; 27.05.10; 29.01.13

(591) тегет (C100% M75% Y10% K30%); плава (C70% M50% Y0% K30%); сива (C100% M75% Y10% K30%); бела
(511) Кл. 4: индустријска уља и масти; мазива; горива (укључујући моторна течна горива).
Кл. 35: оглашавање; вођење послова; пословно управљање; канцеларијски послови.
Кл. 40: обрађивање материјала.

(111) **62513** (181) **19.11.2020.**
(210) Ж- 2010-1898 (220) 19.11.2010.
(151) 28.03.2011.
(300) 19.11.2010.
(732) **THE STRIDE RITE CORPORATION**; 191 Spring Street, Lexington, Massachusetts 02421, US
(740) Срдја Поповић, Гордана Поповић, Борис Поповић, Лидија Томасовић, Катарина Костић, Таковска 19, 11000 Београд
(540)

SRT

(511) Кл. 25: обућа.

(111) **62514** (181) **19.11.2020.**
(210) Ж- 2010-1899 (220) 19.11.2010.
(151) 28.03.2011.
(300) 19.11.2010.
(732) **THE STRIDE RITE CORPORATION**; 191 Spring Street, Lexington, Massachusetts 02421, US
(740) Срђа Поповић, Гордана Поповић, Борис Поповић, Лидија Томасовић, Катарина Костић, Таковска 19, Београд
(540)

(531) 24.17.02; 26.01.01; 26.01.06; 26.11.14; 27.05.04; 27.05.25
(511) Кл. 25: обућа.

(111) **62515** (181) **19.11.2020.**
(210) Ж- 2010-1905 (220) 19.11.2010.
(151) 28.03.2011.
(300) 19.11.2010.
(732) **"PHIWA" DOO**; Matije Korvina broj 17, 24000 Subotica, RS
(540)

(531) 01.01.01; 01.01.05; 01.01.10; 27.05.01; 27.05.10; 27.05.19; 27.05.22; 29.01.12
(591) златна, црна
(511) Кл. 43: пружање услуга, припремање хране и пића за потрошњу и услуге обезбеђивања исхране и смештаја у хотелима.

(111) **62516** (181) **21.06.2020.**
(210) Ж- 2010-1103 (220) 21.06.2010.
(151) 29.03.2011.
(300) 21.06.2010.
(732) **APATINSKA PIVARA APATIN DOO**; 25260 Apatin, Trg oslobođenja br. 5, RS
(740) Адвокати др Миленко Манигодић и Ђуро Манигодић, 11111 Београд, Кумановска 2-б
(540)

(531) 03.04.07; 21.03.01; 26.04.02; 26.04.15; 26.04.18; 27.05.01; 27.05.02; 27.05.09; 29.01.14
(591) жута pantone 123C, сива, црна, бела
(511) Кл. 32: пиво.

(111) **62517** (181) **22.07.2020.**
(210) Ж- 2010-1299 (220) 22.07.2010.
(151) 29.03.2011.
(300) 22.07.2010.
(732) **Aroma Brand doo**; Miće Popovića 11/8, 11000 Beograd, RS
(540)

(531) 26.01.01; 26.01.06; 26.15.01; 27.05.01; 29.01.14
(591) тамно сива, зелена, розе, наранџаста
(511) Кл. 3: средства за бељење и друге супстанце за употребу у перионицама, препарати за чишћење, полирање, рибање и нагризање; сапуни; парфимерија, етерична уља, козметика, лосиони за косу, пасте за зубе.
Кл. 11: велики и мали апарати за освежење и ароматизацију малих и великих стамбених и пословних простора као и улошци за освежење и ароматизацију простора у течном и чврстом стању.

(111) **62518** (181) **29.10.2020.**
(210) Ж- 2010-1768 (220) 29.10.2010.
(151) 29.03.2011.
(300) 29.10.2010.

(732) **UNIVEREXPORT D.O.O.**; Sentandrejski put 165, 21000 Novi Sad, RS
(540)

(531) 26.04.02; 26.04.06; 26.04.07; 26.04.18; 27.05.01; 27.05.10; 27.05.24; 29.01.13
(591) зелена, жута и бела
(511) Кл. 29: месо, риба, живина и дивљач; месне прерађевине; конзервисано, замрзнуто, сушено и кувано воће и поврће; желеи, џемови, компоти; јаја, млеко и млечни производи; јестива уља и масти.
Кл. 30: кафа, чај, какао, шећер, пиринач, тапиока, саго, замена кафе; брашно и производи од житарица, хлеб, колачи и посластице, сладоледи; мед, меласа; квасац, прашак за пециво; со, сенф; сирће, сосови (као додаци); зачини; лед.
Кл. 34: дуван; артикли за пушаче, шибице.

(111) **62519** (181) **26.02.2020.**
(210) Ж- 2010-271 (220) 26.02.2010.
(151) 29.03.2011.
(300) 26.02.2010.
(732) **Koncern za proizvodnju i promet konditorskih proizvoda "BAMBI - BANAT" AD**; Bulevar Zorana Đinđića 8A, Beograd, RS
(740) Адвокати др Миленко Манигодић и Ђуро Манигодић, 11111 Београд, Кумановска 2-б
(540)

(531) 01.15.15; 02.05.23; 03.04.07; 05.07.01; 08.01.09; 25.01.01; 25.05.25; 26.01.01; 26.04.01; 26.04.09; 26.04.18; 27.05.01; 29.01.15
(591) бордо, црвена, плава, зелена, наранџаста, жута, зелена, браон, беж, окер, светло плава, сива, црна и бела
(526) "без транс масти" (граф), "погодно за вегетаријанце" (граф)
(511) Кл. 30: кекс.

(111) **62520** (181) **27.09.2020.**
(210) Ж- 2010-1612 (220) 27.09.2010.
(151) 30.03.2011.
(300) 27.09.2010.
(732) **AstraZeneca UK Limited**; 2 Kingdom Street, London, W2 6BD, UK
(740) Петошевић Д.О.О., Веле Нигринове 16А, 11000 Београд
(540)

DUOPRIL

(511) Кл. 5: фармацеутски препарати и супстанце.

(111) **62521** (181) **27.09.2020.**
(210) Ж- 2010-1611 (220) 27.09.2010.
(151) 30.03.2011.
(300) 27.09.2010.
(732) **AstraZeneca UK Limited**; 2 Kingdom Street, London, W2 6BD, UK
(740) Петошевић Д.О.О., Веле Нигринове 16А, 11000 Београд
(540)

FOSIPROX HCT

(511) Кл. 5: фармацеутски препарати и супстанце.

(111) **62522** (181) **27.09.2020.**
(210) Ж- 2010-1610 (220) 27.09.2010.
(151) 30.03.2011.
(300) 27.09.2010.
(732) **AstraZeneca UK Limited**; 2 Kingdom Street, London, W2 6BD, UK
(740) Петошевић ".О.О., Веле Нигринове 16А, 11000 Београд
(540)

ASOPRIL

(511) Кл. 5: фармацеутски препарати и супстанце.

(111) **62523** (181) **27.09.2020.**
(210) Ж- 2010-1607 (220) 27.09.2010.
(151) 30.03.2011.
(300) 27.09.2010.
(732) **AstraZeneca UK Limited**; 2 Kingdom Street, London, W2 6BD, UK
(740) Петошевић Д.О.О., Веле Нигринове 16А, 11000 Београд
(540)

ZELTAXON

(511) Кл. 5: фармацеутски препарати и супстанце.

(111) **62524** (181) **27.09.2020.**
(210) Ж- 2010-1602 (220) 27.09.2010.
(151) 30.03.2011.
(300) 27.09.2010.
(732) **AstraZeneca UK Limited**; 2 Kingdom Street, London, W2 6BD, UK

(740) Петошевић Д.О.О., Веле Нигринове 16А, 11000 Београд
(540)

# ERTONEM

(511) Кл. 5: фармацеутски препарати и супстанце.

(111) **62525** (181) **27.09.2020.**
(210) Ж- 2010-1604 (220) 27.09.2010.
(151) 30.03.2011.
(300) 27.09.2010.
(732) **AstraZeneca UK Limited**; 2 Kingdom Street, London, W2 6BD, UK
(740) Петошевић Д.О.О., Веле Нигринове 16А, 11000 Београд
(540)

# CAPEMAX

(511) Кл. 5: фармацеутски препарати и супстанце.

(111) **62526** (181) **27.09.2020.**
(210) Ж- 2010-1605 (220) 27.09.2010.
(151) 30.03.2011.
(300) 27.09.2010.
(732) **AstraZeneca UK Limited**; 2 Kingdom Street, London, W2 6BD, UK
(740) Петошевић Д.О.О., Веле Нигринове 16А, 11000 Београд
(540)

# PETABIX

(511) Кл. 5: фармацеутски препарати и супстанце.

(111) **62527** (181) **27.09.2020.**
(210) Ж- 2010-1606 (220) 27.09.2010.
(151) 30.03.2011.
(300) 27.09.2010.
(732) **AstraZeneca UK Limited**; 2 Kingdom Street, London, W2 6BD, UK
(740) Петошевић Д.О.О., Веле Нигринове 16А, 11000 Београд
(540)

# NEOTAXEL

(511) Кл. 5: фармацеутски препарати и супстанце.

(111) **62528** (181) **27.09.2020.**
(210) Ж- 2010-1609 (220) 27.09.2010.
(151) 30.03.2011.
(300) 27.09.2010.
(732) **AstraZeneca UK Limited**; 2 Kingdom Street, London, W2 6BD, UK
(740) Петошевић Д.О.О., Веле Нигринове 16А, 11000 Београд
(540)

# FOSIPROX

(511) Кл. 5: фармацеутски препарати и супстанце.

(111) **62529** (181) **27.09.2020.**
(210) Ж- 2010-1603 (220) 27.09.2010.
(151) 30.03.2011.
(300) 27.09.2010.
(732) **AstraZeneca UK Limited**; 2 Kingdom Street, London, W2 6BD, UK
(740) Петошевић Д.О.О., Веле Нигринове 16А, 11000 Београд
(540)

# ERTAX

(511) Кл. 5: фармацеутски препарати и супстанце.

(111) **62530** (181) **27.09.2020.**
(210) Ж- 2010-1608 (220) 27.09.2010.
(151) 31.03.2011.
(300) 27.09.2010.
(732) **AstraZeneca UK Limited**; 2 Kingdom Street, London, W2 6BD, UK
(740) Петошевић Д.О.О., Веле Нигринове 16А, 11000 Београд
(540)

# BETAMULTIFER

(511) Кл. 5: фармацеутски препарати и супстанце.

(111) **62531** (181) **18.11.2020.**
(210) Ж- 2010-1896 (220) 18.11.2010.
(151) 31.03.2011.
(300) 18.11.2010.
(732) **Preduzeće za proizvodnju i emitovanje TV programa FOX televizija doo Beograd**; Autoput 22, 11000 Beograd, RS
(740) Предраг Гроза, 11000 Београд, Царице Милице 3
(540)

(531) 01.15.09; 01.15.14; 26.01.01; 26.01.18; 27.05.01; 27.05.12; 27.05.21; 29.01.13
(591) наранџаста, жута, бела

(511) Кл. 35: оглашавање; вођење послова; пословно управљање; канцеларијски послови.
Кл. 38: телекомуникације.
Кл. 41: образовне услуге; припремање обуке; разонода; спортске и културне активности.

(111) **62532** (181) **11.02.2021.**
(210) Ж- 2011-184 (220) 11.02.2011.
(151) 31.03.2011.
(300) 11.02.2011.
(732) **Stiefel Laboratories, Inc. Corporation Service Company**; 2711 Centerville Road, Suite 400, Wilmington, Delaware 19808, US
(740) Дејан П. Богдановић и др., Влајковићева 28, 11000 Београд
(540)

DUAC

(511) Кл. 5: фармацеутски препарати и супстанце.

(111) **62533** (181) **09.03.2021.**
(210) Ж- 2011-340 (220) 09.03.2011.
(151) 31.03.2011.
(300) 09.03.2011.
(732) **AGROMARKET doo**; Kraljevačkog bataljona 235/2, 34000 Kragujevac, RS
(540)

APSOLUT

(511) Кл. 5: препарат за уништавање штеточина-фунгицид, хербицид, инсектицид.

(111) **62534** (181) **09.03.2021.**
(210) Ж- 2011-341 (220) 09.03.2011.
(151) 31.03.2011.
(300) 09.03.2011.
(732) **AGROMARKET doo**; Kraljevačkog bataljona 235/2, 34000 Kragujevac, RS
(540)

METIX

(511) Кл. 5: препарат за уништавање штеточина-фунгицид, хербицид, инсектицид.

(111) **62535** (181) **09.03.2021.**
(210) Ж- 2011-318 (220) 09.03.2011.
(151) 31.03.2011.
(300) 09.03.2011.
(732) **ALVOGEN PHARMA SERBIA DOO Društvo za posredovanje, marketing i usluge sa ograničenom odgovornošću**; Bulevar Zorana Đinđića 82/7, 11000 Beograd, RS
(540)

ALVOTADIN

(511) Кл. 5: фармацеутски, ветеринарски и санитарни препарати; дијететске суптанце прилагођене за употребу у медицини, храна за бебе; фластери, материјали за завијање; материјали за пломбирање зуба, зубарска смола; дезинфекциона средства; препарати за уништавање штеточина; фунгициди, хербициди.

(111) **62536** (181) **09.02.2019.**
(210) Ж- 2009-270 (220) 09.02.2009.
(151) 31.03.2011.
(300) 09.02.2009.
(732) **Ušće Tower I d.o.o.**; Bulevar Mihajla Pupina 6, 11070 Novi Beograd, RS
(740) Адвокатска канцеларија Карановић & Николић, 11000 Београд, Лепеничка 7
(540)

(531) 26.11.11; 27.05.01; 27.05.04; 27.05.17; 29.01.12
(591) црвена, сива
(511) Кл. 35: оглашавање, вођење послова, пословно управљање, канцеларијски послови, све везано за делатност трговинских друштава

(111) **62537** (181) **09.02.2019.**
(210) Ж- 2009-271 (220) 09.02.2009.
(151) 31.03.2011.
(300) 09.02.2009.
(732) **UŠĆE SHOPPING CENTER D.O.O. BELGRADE**; Bulevar Mihajla Pupina br.6, 11070 Novi Beograd, RS
(540)

(531) 24.17.02; 26.01.03; 26.11.07; 26.11.08; 27.05.01; 27.05.10; 29.01.15
(591) црвена, плава, зелена, наранџаста, сива и бела.
(511) Кл. 35: оглашавање, вођење послова, пословно управљање, канцеларијски послови, све везано за делатност трговачких друштава.

(111) **62538** (181) **12.12.2018.**
(210) Ж- 2008-3034 (220) 12.12.2008.
(151) 31.03.2011.
(300) 12.12.2008.

(732) **"Zlatiborsko prozorče"doo Novi Sad**; Dimitrija Tucovića br.3, Novi Sad, RS
(540)

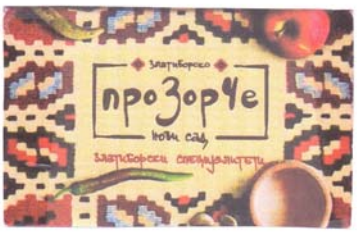


(531) 05.07.13; 05.09.15; 09.01.11; 11.03.07; 25.12.25; 26.04.02; 26.04.18; 28.05.00; 29.01.15
(591) жуто-наранџаста, окер, светло и тамно црвена, светло и тамно браон, тонови тамније и светлије зелене
(511) Кл. 41: спортске и културне активности.
Кл. 43: услуге обезбеђивања хране и пића пореклом са Златибора.

---

(111) **62539** (181) **04.02.2020.**
(210) Ж- 2010-138 (220) 04.02.2010.
(151) 31.03.2011.
(300) 04.02.2010.
(732) **LINGUA CENTAR ZA STRANE JEZIKE Ivana Macedonič Eremić PR**; 21000 Novi Sad, Železnička br. 36, RS
(740) Милан Вебер, 21000 Нови Сад, Жарка Зрењанина бр. 4/I
(540)

(531) 26.04.02; 26.04.09; 26.04.18; 27.05.01; 29.01.13
(591) наранџаста и плава
(526) Lingua
(511) Кл. 41: образовне услуге.

---

(111) **62540** (181) **16.03.2020.**
(210) Ж- 2010-397 (220) 16.03.2010.
(151) 31.03.2011.
(300) 16.03.2010.
(732) **Koncern za proizvodnju i promet kondiktorskih proizvoda "BAMBI-BANAT" AD**; Bulevar Zorana Djindjića 8A, 11070 Novi Beograd, RS
(740) Адвокати др Миленко Манигодић и Ђуро Манигодић, 11111 Београд, Кумановска 2-б
(540)

(531) 03.04.07; 26.04.02; 26.04.18; 27.05.01; 27.05.10; 27.05.24; 29.01.13
(591) црвена, бордо, бела
(511) Кл. 16: штампане ствари.
Кл. 30: млевени кекс, чоколада за кување.

---

(111) **62541** (181) **26.03.2020.**
(210) Ж- 2010-468 (220) 26.03.2010.
(151) 31.03.2011.
(300) 26.03.2010.
(732) **SZR SIGRAF Plus d.o.o.**; Ćirila i Metodija bb., 37000 Kruševac, RS
(540)

(531) 01.15.11; 04.05.05; 04.05.21; 27.05.01
(511) Кл. 16: производи од хартије, свеске, штампане ствари, фотографије, канцеларијски материјал.

---

(111) **62542** (181) **08.04.2020.**
(210) Ж- 2010-557 (220) 08.04.2010.
(151) 31.03.2011.
(300) 08.04.2010.
(732) **Društvo za proizvodnju osvežavajućih napitaka, plastične ambalaže i mineralne vode HEBA AD Bujanovac**; Industrijska zona bb, Bujanovac, RS
(540)

(531) 25.01.25; 26.04.01; 26.04.16; 26.04.18; 27.05.01; 27.05.24
(591) зелена и бела
(511) Кл. 16: хартија, картон и производи од њих, који нису укључени у друге класе; штампане ствари; фотографије; канцеларијски материјал; писаће машине и канцеларијски реквизити (изузев намештаја); материјали за обуку и наставу (иэузев апарата); пластични материјал за паковање (који није укључен у друге класе).
Кл. 32: минералне и содне воде и друга безалкохолна пића; пића од воћа и воћни сокови; сирупи и други препарати за производњу пића.

Кл. 35: оглашавање, вођење послова, пословно управљање; канцеларијски послови.
Кл. 41: образовне услуге; припремање обуке; разонода; спортске и културне активности.

(111) **62543** (181) **04.05.2020.**
(210) Ж- 2010-755 (220) 04.05.2010.
(151) 31.03.2011.
(300) 04.05.2010.009064511 28.04.2010. EM
(732) **CBM Creative Brands Marken GmbH**; Kalandergasse 4, 8045 Zürich, CH
(740) Ћосовић М. Драгољуб, адвокат, Војводе Драгомира 27, 11000 Београд
(540)

Oliver Conrad

(511) Кл. 9: оптички инструменти, посебно наочаре, наочаре за сунце, наочаре за скијање, наочаре за корекцију вида, оквири за наочаре, сочива за наочаре, мекане и тврде футроле за наочаре.
Кл. 14: драгоцени метали и њихове легуре и производи од драгоцених метала или са превлаком од њих, који нису укључени у друге класе; накит, бижутерија, драго камење; часовничарски и хронометријски инструменти.

(111) **62544** (181) **10.06.2020.**
(210) Ж- 2010-1050 (220) 10.06.2010.
(151) 31.03.2011.
(300) 10.06.2010.
(732) **JAT-KETERING DOO**; Aerodrom Nikola Tesla, Surčin, Beograd, RS
(740) Зоран Живковић, 11000 Београд, Алексе Ненадовића 16
(540)

ŠLJIV-O-ČOK

(511) Кл. 29: конзервисано, замрзнуто, сушено и кувано воће и поврће; орах прерађен (очишћен).
Кл. 30: чоколада, колачи, посластице, чоколадом преливене дражеје од суве шљиве и ораха; суве шљиве преливене чоколадом са језгром од ораха.

(111) **62545** (181) **05.07.2020.**
(210) Ж- 2010-1182 (220) 05.07.2010.
(151) 31.03.2011.
(300) 05.07.2010.
(732) **Seattle's Best Coffee LLC**; 2401 Utah Avenue South, Seattle, Washington 98134, US
(740) Петошевић д.о.о., Веле Нигринове 16А, 11000 Београд
(540)

SEATTLE'S BEST COFFEE

(511) Кл. 16: публикације и штампане ствари, тачније, билтени, и часописи у којима се налазе информације о кафи и онима који пију кафу, папирни филтери за апарате за кафу, карте за играње, фото албуми, папир за цртање, оловке за цртање, хемијске оловке, забележивачи за књиге, кутије за оловке, кутије за канцеларијски материјал, футроле за пенкала, футроле за оловке, канцеларијски материјал, постери, салвете, чаше, подметачи, кесе, омотачи за чаше.
Кл. 21: електрични и механички апарати за млевење кафе којима се ручно управља, чаше за кафу и напитке, отпорне на топлоту, филтери за кафу за вишекратну употребу који нису од папира, подметачи који нису од папира, термоси отпорни на топлоту, чаше за кафу, стакларија, посуђе, тањири и чиније, троношци, посуде за одлагање ствари, апарати за филтер кафу који нису на струју, посуде за прављење кафе са притискивачем које нису на струју, и украсне посуде за одлагање хране, држачи за свеће (који нису од драгоцених метала), свећњаци који нису од драгоцених метала, керамичке фигурице, порцеланске фигурице.
Кл. 28: играчке, тачније, медведићи, пуњене играчке, плишане играчке, лутке и додаци за њих, божићни украси, jo-jo.
Кл. 35: пословно управљање; пословни менаџмент; франшизинг, тачније услуге техничке помоћи у успостављању и/или управљању ресторанима, кафићима, кућама кафе и снек-баровима; услуге малопродаје: кафе, чаја, какаоа, запаковане и припремљене хране, електричних кухињских апарата, кухињских апарата који нису на струју, кућних потрепштина, кухињског посуђа, сатова, ручних сатова, кухињских тајмера, штоперица, накита, књига, музичких записа, подлога за мишеве, новчаника, лисница, великих торби, торбица, актовки, торби за књиге, путних торби и кишобрана, сви направљени од платна, пластике или коже, привезака за кључеве од коже, одеће, капа и шешира, играчака, укључујући медведиће, пуњене играчке, плишане играчке, лутке и додатке за њих, божићних украса; велепродајна дистрибуција, велепродајне радње и услуге наручивања на велико: кафе, чаја, какаоа, запаковане и припремљене хране, електричних кухињских апарата, кухињских апарата који нису на струју, кућних потрепштина, кухињског посуђа, сатова, ручних сатова, кухињских тајмера, штоперица, накита, књига, музичких записа, подлога за мишеве, новчаника, лисница, великих торби, торбица, актовки, торби за књиге, путних торби и кишобрана, сви направљени од платна, пластике или коже, привезака за кључеве од коже, одеће, капа и шешира, играчака, укључујући медведиће, пуњене играчке, плишане играчке, лутке и додатке за њих, божићних украса; услуге наручивања путем поште и услуге наручивања путем поште преко каталога, услуге наручивања на компјутеру путем интернета, услуге малопродаје на компјутеру путем интернета, услуге

наручивања путем интернета и услуге малопродајних радњи на интернету, све у вези са: кафом, чајем, какаом, запакованом и припремљеном храном, електричним кухињским апаратима, кухињским апаратима који нису на струју, кућним потрепштинама, кухињским посуђем, сатовима, ручним сатовима, кухињским тајмерима, штоперицама, накитом, књигама, музичким записима, подлогама за мишеве, новчаницима, лисницама, великим торбама, торбицама, актовкама, торбама за књиге, путним торбама и кишобранима, сви направљени од платна, пластике или коже, привесцима за кључеве од коже, одећом, капама и шеширима, играчкама, укључујући медведиће, пуњене играчке, плишане играчке, лутке и додатке за њих, божићним украсима; услуге компјутеризованог регистровања поклона путем интернета.

(111) **62546** (181) **13.07.2020.**
(210) Ж- 2010-1223 (220) 13.07.2010.
(151) 31.03.2011.
(300) 13.07.2010.
(732) **UNIVEREXPORT EXPORT-IMPORT d.o.o.**; 21000 Novi Sad, Sentandrejski put 165, RS
(740) Милан Д. Павлица, 11000 Београд, Чарли Чаплина 15/16
(540)

(531) 26.04.01; 26.04.06; 26.04.18; 27.05.01; 27.05.17; 29.01.12
(591) зелена (pantone 376C) и црна
(511) Кл. 16: штампане ствари; књиговезачки материјал; фотографије; лепила за канцеларијске и кућне потребе; уметнички материјали; материјали за обуку и наставу (изузев апарата); пластични материјал за паковање (који није укључен у друге класе); штампарска слова; клишеи.
Кл. 29: месо, риба, живина и дивљач; месне прерађевине; конзервисано, замрзнуто, сушено и кувано воће и поврће; желеи, џемови, компоти; јаја, млеко и млечни производи; јестива уља и масти.
Кл. 30: кафа, чај, какао, шећер, пиринач, тапиока, саго, замена кафе; брашно и производи од житарица, хлеб, колачи и посластице, сладоледи; мед, меласа; прашак за пециво; со, сенф; сирће, сосови (као додаци); зачини; лед.
Кл. 31: пољопривредни, вртларски и шумарски производи и зрневље који нису укључени у друге класе; живе животиње; свеже воће и поврће; семе, природне биљке и цвеће; храна за животиње, слад.
Кл. 33: алкохолна пића (изузев пива).

(111) **62547** (181) **25.08.2020.**
(210) Ж- 2010-1462 (220) 25.08.2010.
(151) 31.03.2011.
(300) 25.08.2010.
(732) **PODRAVKA d.d.**; 48000 Koprivnica, Ante Starčevića 32, HR
(740) Адвокати др Миленко Манигодић и Ђуро Манигодић, 11111 Београд, Кумановска 2-б
(540)

KVIKI GRIC

(511) Кл. 29: кикирики, бадеми, чипс/пржени кромпирић.
Кл. 30: кекс, крекери, кукурузне кокице, коктел пецива, слано трајно пециво, штапићи, флипс,снек.

(111) **62548** (181) **23.09.2020.**
(210) Ж- 2010-1582 (220) 23.09.2010.
(151) 31.03.2011.
(300) 23.09.2010.
(732) **Eurocon Building Industries-FZC**; P.O. Box 4819, Dubai, AE
(740) Слободан Влаховић, адвокат, 11070 Нови Београд, Радоја Дакића 35/32
(540)

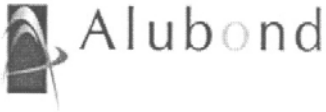


(531) 26.04.02; 26.04.16; 26.11.12; 27.05.01
(511) Кл. 6: обични метали и њихове легуре; метални грађевински материјали; металне преносне грађевине; материјали од метала за железничке шине; неелектрични каблови и жице од обичног метала; браварски производи, мали метални гвожђарски производи; цевчице и цеви од метала; сефови; производи од обичних метала обухваћени класом 6.

(111) **62549** (181) **17.09.2020.**
(210) Ж- 2010-1553 (220) 17.09.2010.
(151) 31.03.2011.
(300) 17.09.2010.
(732) **Piramida 72, d.o.o.**; 15000 Šabac, Beogradski put bb., RS
(740) Александар Грујичић, 15000 Шабац, Таковска 22
(540)

(531) 05.03.15; 25.05.02; 26.04.04; 26.04.06; 26.04.18; 29.01.13

(591) бела, сива, плава
(526) fresh
(511) Кл. 3: сапуни, парфимерија, етерична уља, козметика, лосиони за косу.
Кл. 16: папирне марамице, папирне салвете.

(111) **62550** (181) **01.10.2020.**
(210) Ж- 2010-1633 (220) 01.10.2010.
(151) 31.03.2011.
(300) 01.10.2010.
(732) **KAMAL KHANBABAEI GENERAL TRADING CO. L.L.C.**; P.O. Box. 65073, Al Ras, Dierah, Dubai, AE
(740) Слободан Влаховић, адвокат, 11070 Нови Београд, Радоја Дакића 35/32
(540)

(531) 01.15.05; 03.04.04; 03.04.23; 25.01.19; 25.05.25; 26.11.12; 26.15.01; 27.05.01; 27.05.02; 29.01.15
(591) црна, бела, сива, црвена, наранџаста, жута.
(511) Кл. 32: енергетска пића (не за медицинске сврхе); безалкохолна пића; освежавајућа безалкохолна пића.

(111) **62551** (181) **05.10.2020.**
(210) Ж- 2010-1646 (220) 05.10.2010.
(151) 31.03.2011.
(300) 05.10.2010.
(732) **"Grand prom" akcionarsko društvo za proizvodnju, promet i usluge**; 11070 Novi Beograd, Surčinska 6a, RS
(540)

(531) 26.04.01; 26.04.18; 27.05.01; 27.05.22; 27.05.24; 29.01.12
(591) црвена, бела
(511) Кл. 30: кафа, чај, замена кафе.
Кл. 43: услуге обезбеђивања хране и пића.

(111) **62552** (181) **08.10.2020.**
(210) Ж- 2010-1676 (220) 08.10.2010.
(151) 31.03.2011.
(300) 08.10.2010.
(732) **BEO IMPERA D.O.O.**; Bulevar Mihajla Pupina 10Z, lokal br. 59, 11000 Beograd, RS
(740) Вук Божовић, Булевар Деспота Стефана 81, 11000 Београд
(540)

(531) 26.04.02; 26.04.12; 26.04.18; 26.15.01; 27.05.01; 27.05.10; 29.01.12
(591) златна (pantone 124c и pantone 7512c), зелена (pantone 627c) и бела
(511) Кл. 16: штампане ствари, нарочито листе за клађење, календари, канцеларијски материјал, карте, брошуре.
Кл. 41: разонода, нарочито спортско клађење, пружање информација и саветодавних услуга у вези са клађењем, информације у вези са спортским манифестацијама, пружање услуга електронског коцкања, клађење путем интернета.
Кл. 43: услуге обезбеђивања хране и пића.

(111) **62553** (181) **15.10.2020.**
(210) Ж- 2010-1703 (220) 15.10.2010.
(151) 31.03.2011.
(300) 15.10.2010.
(732) **The North Face Apparel Corp.**; 3411 Silverside Road, Wilmington, Delaware 19810, US
(740) Ћосовић М. Драгољуб, адвокат, Војводе Драгомира 27, 11000 Београд
(540)

NEVER STOP EXPLORING

(511) Кл. 18: кожа и имитација коже, производи израђени од ових материјала који нису укључени у друге класе; животињско коже, крзна; кофери и путне торбе; кишобрани, сунцобрани и штапови за ходање; бичеви, сарачка и седларска опрема, нарочито торбе које се носе на ледјима, торбе ташне, ручне торбе, руксаци, торбе и кофери за дечији пртљаг, овалне торбе са ручкама, торбе од платна, коже или пластчних материјала са ручицама на извлачење, торбе и кофери са точкићима и ручицама за вучење, тврди кофери, торбе за смештај одела на вешалицама као и остале торбе и кофери за смештај ствари за путовања, који не припадају другим класама.
Кл. 20: намештај; огледала, оквири за слике; производи (који нису обухваћени другим класама) од дрвета, плуте, трске, рогоза, врбовог прућа, рога, кости; слоноваче, китове кости, шкољки; ћилибара, сцдефа, морске пене и замене свих ових материјала, или од пластике, нарочито вреће за спавање.

Кл. 22: ужад, канапи, мреже, шатори, надстрешнице од цираде, цираде, једра, вреће и торбе (који нису укључени у друге класе); материјал за пуњење мадраца (осим од вуне и пластике); сирове влакнасте текстилне материје, нарочито шатори.
Кл. 25: одећа, обућа и покривала за главу.
Кл. 35: оглашавање; пословни менаџмент; услуге пословне администрације; услуге канцеларијског пословања, нарочито услуге тзв. "on-line" продаје и малопродаје, путем итернет веза, робе намењене личној употреби или потрошњи и то: кожа и имитација коже, производи израђени од ових материјала који нису укључени у друге класе; животињске коже, крзна; кофери и путне торбе; кишобрани, сунцобрани и штапови за ходање; бичеви, сарачка и седларска опрема, нарочито торбе које се носе на леђима, торбе ташне, ручне торбе, руксаци, торбе и кофери за дечији пртљаг, овалне торбе са ручкама, торбе од платна, коже или пластичних материјала са ручицама на извлачење, торбе и кофери са точкићима и ручицама за вучење, тврди кофери, торбе за смештај одела на вешалицама као и остале торбе и кофери за смештај ствари за путовања који не припадају другим класама; намештај; огледала, оквири за слике; производи (који нису обухваћени другим класама) од дрвета, плуте, трске, рогоза, врбовог прућа, рога, кости; слоноваче, китове кости, шкољки; ћилибара, седефа, морске пене и замене свих ових материјала, или од пластике, нарочито вреће за спавање; ужад, канапи, мреже, шатори, надстрешнице од цираде, цираде, једра, вреће и торбе (који нису укључени у друге класе); материјал за пуњење мадраца (осим од вуне и пластике); сирове влакнасте текстилне материје, нарочито шатори; одећа, обућа и покривала за главу.

(111) **62554** (181) **15.10.2020.**
(210) Ж- 2010-1705 (220) 15.10.2010.
(151) 31.03.2011.
(300) 15.10.2010.
(732) **The North Face Apparel Corp.**; 3411 Silverside Road, Wilmington, Delaware 19810, US
(740) Ћосовић М. Драгољуб, адвокат, Војводе Драгомира 27, 11000 Београд
(540)

(531) 26.02.03; 26.11.03; 26.11.06; 26.11.12
(511) Кл. 35: оглашавање; пословни менаџмент; услуге пословне администрације; услуге канцеларијског пословања, нарочито услуге тзв. "on line" продаје и малопродаје, путем Интернет веза, робе намењене личној употреби или потрошњи и то: кожа и имитација коже, производи израђени од ових материјала који нису укључени у друге класе; животињске коже, крзна; кофери и путне торбе; кишобрани, сунцобрани и штапови за ходање; бичеви, сарачка и седларска опрема, нарочито торбе које се носе на леђима, торбе ташне, ручне торбе, руксаци, торбе и кофери за дечији пртљаг, овалне торбе са ручкама, торбе од платна, коже или пластичних материјала са ручицама на извлачење, торбе и кофери са точкићима и ручицама за вучење, тврди кофери, торбе за смештај одела на вешалицама као и остале торбе и кофери за смештај ствари за путовања које не припадају другим класама; намештај; огледала, оквири за слике; производи (који нису обухваћени другим класама) од дрвета, плуте, трске, рогоза, врбовог прућа, рога, кости; слоноваче, китове кости, шкољки; ћилибара, седефа, морске пене и замене свих ових материјала, или од пластике, нарочито вреће за спавање; ужад, канапи, мреже, шатори, надстрешнице од цираде, цираде, једра, вреће и торбе (који нису укључени у друге класе); материјал за пуњење мадраца (осим од вуне и пластике); сирове влакнасте текстилне материје, нарочито шатори;одећа, обућа и покривала за главу.

(111) **62555** (181) **15.10.2020.**
(210) Ж- 2010-1708 (220) 15.10.2010.
(151) 31.03.2011.
(300) 15.10.2010.
(732) **The North Face Apparel Corp.**; 3411 Silverside Road, Wilmington, Delaware 19810, US
(740) Ћосовић М. Драгољуб, адвокат, Војводе Драгомира 27, 11000 Београд
(540)

(531) 26.02.03; 26.04.16; 26.04.18; 26.11.03; 26.11.06; 26.11.12; 27.05.01
(511) Кл. 35: оглашавање; пословни менаџмент; услуге пословне администрације; услуге канцеларијског пословања, нарочито услуге тзв. "on-line" продаје и малопродаје, путем интернет веза, робе намењене личној употреби или потрошњи и то: кожа и имитација коже, производа израђених од ових материјала који нису укључени у друге класе; животињске коже, крзна; кофери и путне торбе; кишобрани, сунцобрани и штапови за ходање; бичеви сарачка и седларска опрема, нарочито торбе које се носе на леђима, торбе ташне,

ручне торбе, руксаци, торбе и кофери за дечији пртљаг, овалне торбе са ручкама, торбе од платна, коже или пластичних материјала са ручицама на извлачење, торбе и кофери са точкићима и ручицама за вучење, тврди кофери, торбе за смештај одела на вешалицама као и остале торбе и кофери за смештај ствари за путовања који не припадају другим класама; намештај; огледала; оквири за слике; производи (који нису обухваћени другим класама) од дрвета, плуте, трске, рогоза, врбовог прућа, рога, кости, слоноваче, китове кости, шкољки; ћилибара, седефа, морске пене и замене свих ових материјала или од пластике, нарочито вреће за спавање; ужад, канапи, мреже, шатори, надстрешнице од цираде, цираде, једра, вреће и торбе (који нису укључени у друге класе); материјал за пуњење мадраца (осим вуне и пластике); сирове влакнасте текстилне материје, нарочито шатори; одећа, обућа и покривала за главу.

(111) **62556** (181) **29.10.2020.**
(210) Ж- 2010-1771 (220) 29.10.2010.
(151) 31.03.2011.
(300) 29.10.2010.
(732) **Yoga I Jazz d.o.o.**; Bulevar kralja Aleksandra 48, 11000 Beograd, RS
(540)

jazzayoga

(531) 27.05.01
(511) Кл. 43: услуге обезбеђивања хране; привремени смештај.

(111) **62557** (181) **18.10.2020.**
(210) Ж- 2010-1713 (220) 18.10.2010.
(151) 31.03.2011.
(300) 18.10.2010.
(732) **D-Link Corporation**; No. 289, Sinhu 3rd Road, Neihu District, Taipei City 114, TW
(740) Ристић Драгослав, адвокат, 11000 Београд, Цара Лазара 7
(540)

D-Link

(531) 27.05.01; 27.05.17
(511) Кл. 9: чвориштa, прекидачи, интегрисана кола са великим бројем елемената, етернет примопредајници, магнетне траке или дискови или CD-ROM-ови снимљени са програмима за мреже, заштитни зид за рад на мрежи (firewall), мрежни адаптери, модеми, кабловски рутери, бежични кабловски модеми, бежични кабловски рутери, PC камере, уређаји за снимање видеа, AV конвертори (аудио/видео конвертори), IP камере (камере за интернет протокол), компакт флеш картице, блутут модеми, блутут адаптер, блутут слушалице, блутут адаптери за штампаче, блутут приступне јединице, бежичне мрежне картице, бежични портали, бежични сервери за штампаче, бежичне компакт флеш картице, бежични конвертори, бежични аудио адаптери, бежични медија плејери, рутери за кућну употребу, VPN портали, VPN рутери, PC заштитни зид (firewall), сервери за штампаче, IP телефони, интернет видео телефони, бежични рутери за играње игара, бежични адаптери за играње игара, DMA (дигитални медија адаптери), интернет камере, јединице за потхрањивање података на мрежама, KBM прекидачи (тастатура/видео екран/миш прекидачи), USB флеш драјвови, USB чвориштa, USB адаптери, VoIP протоколи, IP-PBX (интернет протокол-приватне телефонске централе), сплитер, протоколи за безбедност информација, DSL модеми, DSL рутери, бежични DSL модеми, бежични DSL рутери, ADSL модеми, ADSL рутери, VDSL прекидачи, VDSL модеми, SHDSL (појединачне дигиталне претплатничке линије са високим нивоом протока), ISDN рутери, ISDN терминал рутери, ISDN терминал адаптери, set-top box, аналогни модеми, DSC (дигитални фотоапарати), интернет радио, јединице за складиштење медија, читачи картица.

(111) **62558** (181) **01.11.2020.**
(210) Ж- 2010-1774 (220) 01.11.2010.
(151) 31.03.2011.
(300) 01.11.2010.
(732) **INTERCHEM-HIM D.O.O.**; Kneza Lazara A2, Jagodina, RS
(540)

Fitofit

(511) Кл. 5: дијететске супстанце прилагођене за употребу у медицини.

(111) **62559** (181) **02.11.2020.**
(210) Ж- 2010-1780 (220) 02.11.2010.
(151) 31.03.2011.
(300) 02.11.2010.
(732) **Akcionarsko društvo za proizvodnju konditorskih proizvoda "Soko Nada Štark"**; 11000 Beograd, Kumodraška 249, RS
(540)

(531) 01.15.09; 08.01.25; 11.03.09; 27.05.01; 27.05.03; 29.01.14
(591) црвена, бела, бордо, окер
(511) Кл. 30: слани штапићи.

(111) **62560** (181) **02.11.2020.**
(210) Ж- 2010-1785 (220) 02.11.2010.
(151) 31.03.2011.
(300) 02.11.2010.
(732) **Akcionarsko društvo za proizvodnju konditorskih proizvoda "Soko Nada Štark"**; 11000 Beograd, Kumodraška 249, RS
(540)

(531) 05.05.01; 25.01.19; 26.04.07; 27.05.01; 27.05.02; 29.01.14
(591) тамно браон, сива, црвена, бела, зелена.
(511) Кл. 30: кафа, чај, какао, шећер, замена кафе, брашно и производи од житарица, колачи, посластице, сладоледи, чоколаде, бомбоне, кекс, бисквит, вафел производи, слани штапићи, флипс.

(111) **62561** (181) **09.11.2020.**
(210) Ж- 2010-1830 (220) 09.11.2010.
(151) 31.03.2011.
(300) 09.11.2010.
(732) **"PROTON SYSTEM" d.o.o.**; Viline vode bb, 11000 Beograd, RS
(540)

ZONDOLIN

(511) Кл. 3: козметика.
Кл. 5: дијететске супстанце прилагођене за употребу у медицини.

(111) **62562** (181) **10.11.2020.**
(210) Ж- 2010-1833 (220) 10.11.2010.
(151) 31.03.2011.
(300) 10.11.2010.
(732) **TRADUS ALLEGRO AG**; Baarerstrasse 2, CH-6300 Zug, CH
(740) Дејан П. Богдановић и др., Влајковићева 28, 11000 Београд
(540)

(531) 24.15.01; 24.15.13; 27.05.01; 27.05.17
(511) Кл. 9: компјутерски софтвер који омогућава извршење и обраду електронских трансакција и пренос средстава на трећа лица, и са трећих лица; компјутерски софтвер; софтвер за аутентификацију; компјутерски периферијски уређаји за жичне и бежичне мреже; компјутерски сигурносни уређаји, а нарочито уређаји за генерисање непредвидивог кода за приступ хост компјутерима у банкама података; апарати за снимање, пренос и/или репродукцију звука, слика и/или података; магнетни носиоци података, дискови за снимање; магнетне кодиране кредитне картице и платне картице; аутоматске машине и механизми за апарате који се покрећу новцем или жетоном; регистар касе; рачунске машине, опрема за обраду података и компјутери; апарати и инструменти научни, поморски, геодетски, фотографски, кинематографски, оптички, за вагање, мерење, сигнализацију, контролу (инспекцију), спасавање и наставу; апарати и инструменти за провођење, искључивање, трансформисање, акумулирање, регулисање или контролисање електричне енергије.
Кл. 36: финансијске услуге, а нарочито, омогућавање трансфера финансијских средстава и куповине производа и услуга које нуде трећа лица, све путем електронских комуникационих мрежа; обрачун (клиринг) и усклађивање финансијских трансакција путем електронских комуникационих мрежа; услуге клиринга; пружање широког спектра услуга плаћања и финансијских услуга, а нарочито услуга кредитних картица, издавања кредитних картица и одобравање кредитних линија; обраде и преноса рачуна и њихове наплате, услуге плаћања, услуга исплате гарантованих износа и фондова за тржиште новца; финансијске услуге, а нарочито омогућавање извршења донација у добротворне сврхе, све путем електронских комуникационих мрежа; девизне услуге; услуге кућног банкарства; електронски трансфер средстава; "online" банкарство, телебанкарство; осигурање; финансијски послови; новчани (монетарни) послови; послови везани за непокретности.
Кл. 42: пројектовање и развој компјутерског софтвера за обраду електронског плаћања; обрада електронског трансфера новчаних средстава; процеси аутентификације; пројектовање и развој апликационог програмског интерфејса, пружање информација из области компјутерског софтвера и пројектовања и развоја компјутерског софтвера; услуге техничке подршке, а нарочито решавање проблема (troubleshooting) у вези са компјутерским софтвером.
Кл. 45: пружање заштите од финансијских превара и њихова превенција, и услуге решавања спорова.

(111) **62563** (181) **10.11.2020.**
(210) Ж- 2010-1834 (220) 10.11.2010.
(151) 31.03.2011.
(300) 10.11.2010.

(732) **The Coca Cola Company**; One Coca-Cola Plaza, Atlanta, Georgia 30313, US
(740) Живко Мијатовић & Партнерс д.о.о., 11000 Београд, Таковска 58/4
(540)

COCA-COLA

(511) Кл. 3: средства за бељење и друге супстанце за употребу у перионицама; препарати за чишћење, полирање, рибање и нагризање; сапуни; парфимерија, етерична уља, козметика, лосиони за косу; пасте за зубе.
Кл. 5: фармацеутски и ветеринарски препарати; санитарни препарати за медицинску употребу; дијететске супстанце прилагођене за употребу у медицини, храна за бебе; фластери, материјали за завијање; материјали за пломбирање зуба, зубарска смола; дезинфекциона средства; препарати за уништавање штеточина; фунгициди, хербициди.
Кл. 11: апарати за осветљавање, грејање, производњу паре, кување, хлађење, сушење, вентилацију, снабдевање водом и за санитарне сврхе.
Кл. 14: драгоцени метали и њихове легуре и производи од драгоцених метала или са превлаком од њих, који нису укључени у друге класе; накит, драго камење; часовничарски и хронометријски инструменти.
Кл. 16: хартија, картон и производи од њих, који нису укључени у друге класе; штампане ствари; књиговезачки материјал; фотографије; канцеларијски материјал; лепила за канцеларијске и кућне потребе; уметнички материјали; кичице; писаће машине и канцеларијски реквизити (изузев намештаја); материјали за обуку и наставу (изузев апарата); пластични материјал за паковање (који није укључен у друге класе); штампарска слова; клишеи.
Кл. 18: кожа и имитација коже, производи израђени од ових материјала који нису укључени у друге класе; животињска кожа; кофери и путне торбе; кишобрани, сунцобрани и штапови за ходање; бичеви, сарачка и седларска роба.
Кл. 21: кућне или кухињске справе и посуде; чешљеви и сунђери; четке (изузев кичица); материјали за прављење четки; артикли који се користе при чишћењу; челична вуна; непрерађено или полупрерађено стакло (осим стакла које се користи у грађевинарству); стакларија, порцелан, грнчарија која није укључена у друге класе.
Кл. 25: одећа, обућа, покривала за главу.
Кл. 28: игре и играчке; гимнастички и спортски артикли који нису обухваћени другим класама; украси за јелке.
Кл. 41: образовне услуге; припремање обуке; разонода; спортске и културне активности.

(111) **62564** (181) **10.11.2020.**
(210) Ж- 2010-1835 (220) 10.11.2010.
(151) 31.03.2011.
(300) 10.11.2010.

(732) **The Coca-Cola Company**; One Coca-Cola Plaza, Atlanta, Georgia 30313, US
(740) Живко Мијатовић & Партнерс д.о.о., 11000 Београд, Таковска 58/4
(540)

POWERADE

(511) Кл. 3: средства за бељење и друге супстанце за употребу у перионицама; препарати за чишћење, полирање, рибање и нагризање; сапуни; парфимерија, етерична уља, козметика, лосиони за косу; пасте за зубе.
Кл. 5: фармацеутски и ветеринарски препарати; санитарни препарати за медицинску употребу; дијететске супстанце прилагођене за употребу у медицини, храна за бебе; фластери, материјали за завијање; материјали за пломбирање зуба, зубарска смола; дезинфекциона средства; препарати за уништавање штеточина; фунгициди, хербициди.
Кл. 11: апарати за осветљавање, грејање, производњу паре, кување, хлађење, сушење, вентилацију, снабдевање водом и за санитарне сврхе.
Кл. 14: драгоцени метали и њихове легуре и производи од драгоцених метала или са превлаком од њих, који нису укључени у друге класе; накит, драго камење; часовничарски и хронометријски инструменти.
Кл. 16: хартија, картон и производи од њих, који нису укључени у друге класе; штампане ствари; књиговезачки материјал; фотографије; канцеларијски материјал; лепила за канцеларијске и кућне потребе; уметнички материјали; кичице; писаће машине и канцеларијски реквизити (изузев намештаја); материјали за обуку и наставу (изузев апарата); пластични материјал за паковање (који није укључен у друге класе); штампарска слова; клишеи.
Кл. 18: кожа и имитација коже, производи израђени од ових материјала који нису укључени у друге класе; животињска кожа; кофери и путне торбе; кишобрани, сунцобрани и штапови за ходање; бичеви, сарачка и седларска роба.
Кл. 21: кућне или кухињске справе и посуде; чешљеви и сунђери; четке (изузев кичица); материјали за прављење четки; артикли који се користе при чишћењу; челична вуна; непрерађено или полупрерађено стакло (осим стакла које се користи у грађевинарству); стакларија, порцелан, грнчарија која није укључена у друге класе.
Кл. 25: одећа, обућа, покривала за главу.
Кл. 28: игре и играчке; гимнастички и спортски артикли који нису обухваћени другим класама; украси за јелке.
Кл. 41: образовне услуге; припремање обуке; разонода; спортске и културне активности.

(111) **62565** (181) **10.11.2020.**
(210) Ж- 2010-1837 (220) 10.11.2010.
(151) 31.03.2011.
(300) 10.11.2010.

(732) **The Coca-Cola Company**; One Coca-Cola Plaza, Atlanta, Georgia 30313, US
(740) Живко Мијатовић & Партнерс д.о.о., 11000 Београд, Таковска 58/4
(540)

SPRITE

(511) Кл. 3: средства за бељење и друге супстанце за употребу у перионицама; препарати за чишћење, полирање, рибање и нагризање; сапуни; парфимерија, етерична уља, козметика, лосиони за косу; пасте за зубе.
Кл. 5: фармацеутски и ветеринарски препарати; санитарни препарати за медицинску употребу; дијететске супстанце прилагођене за употребу у медицини, храна за бебе; фластери, материјали за завијање; материјали за пломбирање зуба, зубарска смола; дезинфекциона средства; препарати за уништавање штеточина; фунгициди, хербициди.
Кл. 11: апарати за осветљавање, грејање, производњу паре, кување, хлађење, сушење, вентилацију, снабдевање водом и за санитарне сврхе.
Кл. 14: драгоцени метали и њихове легуре и производи од драгоцених метала или са превлаком од њих, који нису укључени у друге класе; накит, драго камење; часовничарски и хронометријски инструменти.
Кл. 16: хартија, картон и производи од њих, који нису укључени у друге класе; штампане ствари; књиговезачки материјал; фотографије; канцеларијски материјал; лепила за канцеларијске и кућне потребе; уметнички материјали; кичице; писаће машине и канцеларијски реквизити (изузев намештаја); материјали за обуку и наставу (изузев апарата); пластични материјал за паковање (који није укључен у друге класе); штампарска слова; клишеи.
Кл. 18: кожа и имитација коже, производи израђени од ових материјала који нису укључени у друге класе; животињска кожа; кофери и путне торбе; кишобрани, сунцобрани и штапови за ходање; бичеви, сарачка и седларска роба.
Кл. 21: кућне или кухињске справе и посуде; чешљеви и сунђери; четке (изузев кичица); материјали за прављење четки; артикли који се користе при чишћењу; челична вуна; непрерађено или полупрерађено стакло (осим стакла које се користи у грађевинарству); стакларија, порцелан, грнчарија која није укључена у друге класе.
Кл. 25: одећа, обућа, покривала за главу.
Кл. 28: игре и играчке; гимнастички и спортски артикли који нису обухваћени другим класама; украси за јелке.
Кл. 41: образовне услуге; припремање обуке; разонода; спортске и културне активности.

(111) **62566** (181) **10.11.2020.**
(210) Ж- 2010-1838 (220) 10.11.2010.
(151) 31.03.2011.
(300) 10.11.2010.

(732) **MasterCard International Incorporated (Delaware corporation)**; 2000 Purchase Street, Purchase, New York 10577-2509, US
(740) Драгослав Ристић, Владан Малешевић, 11000 Београд, Цара Лазара бр. 7
(540)

MASTERCARD MONEYSEND

(511) Кл. 36: услуге осигурање; финансијски послови; новчани (монетарни) послови; финансијске услуге; банкарске и кредитне услуге; обезбеђивање кредитних картица, дебитних картица, потрошачких картица и вредносних картица; банкарске услуге, услуге плаћања, кредитне услуге, дебитне услуге, услуге наплате, услуге издавања готовог новца, услуге приступа депонованим средствима; услуге плаћања рачуна; услуге кредитних картица, дебитних картица, потрошачких картица, вредносних картица и картица са депонованим средствима; услуге верификације чекова и уновчавања чекова; услуге АТМ машина; обрада финансијских трансакција директно (онлајн) преко компјутерске базе података и преко телекомуникација, као и на местима продаје; услуге обраде финансијских трансакција које врше власници картица преко АТМ машина; обезбеђивање увида у стање рачуна и у податке о уплатама и исплатама, власницима картица, преко АТМ машина; услуге поравнања и ауторизације; услуге путничког осигурања; издавање и откуп путничких чекова и путничких ваучера; услуге провере платиоца; верификација финансијских информација; шифровање и дешифровање финансијских информација; одржавање финансијских података; услуге трансфера електронских фондова и услуге замене валуте; ширење финансијских информација преко интернета и других компјутерских мрежа; услуге плаћања на даљину; услуге електронског плаћања депонованим средствима; обезбеђивање електронских фондова и трансфера валута, услуге електронског плаћања, услуге коришћења претплатничких телефонских картица, услуге издавања готовине, и услуге оверавања трансакција и услуге поравнања; обезбеђење дебитних и кредитних услуга помоћу радио-фреквентних идентификационих уређаја (транспондера); обезбеђивање дебитних и кредитних услуга преко уређаја за комуникацију и телекомуникацију; услуге верификације чекова; услуге издавања и откупа, све у вези са путничким чековима и путничким ваучерима; обезбеђивање финансијских услуга за подршку услугама везаним за промет робе, преко средстава мобилне телекомуникације, укључујући услуге плаћања преко бежичних уређаја; обезбеђивање финансијских услуга за подршку услугама везаним за промет робе директно (онлајн),

преко мрежа или других електронских средстава коришћењем електронски дигитализованих информација; услуге берзе вредности, нарочито услуге сигурне размене вредности, укључујући електронску готовину, преко компјутерске мреже којој се може приступити преко паметних картица; услуге плаћања рачуна које се обезбеђују преко веб сајта; директно (онлајн) електронско банкарство; финансијске услуге обезбеђене преко телефона и путем глобалне компјутерске мреже или интернета; обезбеђивање финансијских услуга преко глобалне компјутерске мреже или интернета; услуге везане за непокретности; услуге везане за непокретну имовину; услуге осигурања непокретности; осигурање за власнике имовине; услуге осигурања у вези са имовином; финансирање непокретности; услуге посредовања, везане за непокретности; оцена непокретности; услуге агенција за непокретности; процењивање непокретности; администрација у вези са непокретностима; администрација финансијских послова у вези са непокретностима; обезбеђивање зајмова за непокретности; услуге финансирања у вези са развојем непокретности; услуге финансијског посредовања у вези са непокретностима; финансијске услуге у вези са непокретном имовином и зградама; финансијске услуге за куповину непокретности; обезбеђивање уговора о зајму осигураних хипотеком; уређивање сувласништва над непокретностима; обезбеђивање финансирања куповине непокретности; помоћ при стицању непокретности и коришћењу непокретности; услуге капиталног инвестирања у непокретности; услуге инвестирања у комецијално власништво; финансијске услуге у вези са стицањем непокретности; финансијске услуге у вези за продајом власништва; финансијска процена непокретности у слободном власништву; финансијска процена непокретности под закупом; организовање давања у закуп непокретности; организовање давања на коришћење непокретности; давање у закуп; давање у закуп непокретности; давање у закуп слободне имовине; услуге управљања поседом у вези са трансакцијама везаним за непокретности; процењивање имовине; управљањем портфолиом имовине; управљање имовином; саветодавне услуге везане за власништво над непокретностима; саветодавне услуге везане за процену непокретности; саветодавне услуге у вези са непокретностима које припадају у вези са непокретностима које припадају корпорацијама; услуге компјутеризованих података у вези са непокретностима; консултанске услуге у вези са непокретном имовином; обезбеђивање информација у вези са непокретностима; обезбеђивање информација у вези са тржиштем имовине; услуге истраживања у вези са стицањем непокретности; услуге истраживања у вези са аукцијом непокретности.

(111) **62567** (181) **10.11.2020.**
(210) Ж- 2010-1839 (220) 10.11.2010.
(151) 31.03.2011.
(300) 10.11.2010.
(732) **Skorup Darko**; Vranjska 20, Zvezdara, 11000 Beograd, RS
(540)

(531) 24.15.01; 27.05.01; 27.05.03
(511) Кл. 35: оглашавање, вођење послова, пословно управљање, канцеларијски послови.
Кл. 38: телекомуникације.
Кл. 39: транспортне услуге, паковање, складиштење робе, организовање путовања.

---

(111) **62568** (181) **11.11.2020.**
(210) Ж- 2010-1842 (220) 11.11.2010.
(151) 31.03.2011.
(300) 11.11.2010.
(732) **A.D. "CENTROPROIZVOD" prehrambena industrija**; Dobanovački put bb, 11271 Surčin-Beograd, RS
(740) "Карановић-Николић" ортачко адвокатско друштво, мр Драгомир Којић, Лепеничка 7, 11000 Београд
(540)

(531) 05.03.14; 05.09.19; 11.03.05; 25.01.06; 26.01.02; 26.01.18; 27.05.01; 27.05.10; 29.01.15
(591) жута, љубичаста, црвена, зелена, браон и бела
(511) Кл. 30: пасуљ.

---

(111) **62569** (181) **11.11.2020.**
(210) Ж- 2010-1843 (220) 11.11.2010.
(151) 31.03.2011.
(300) 11.11.2010.
(732) **DIN "Fabrika duvana" Niš a.d., u sastavu Philip Morris International**; 12. februara 74, 18000 Niš, RS
(740) "Карановић-Николић" ортачко адвокатско друштво, мр Драгомир Којић, адвокат, Лепеничка 7, 11000 Београд

(540)

(531) 19.03.03; 25.07.08; 26.03.04; 27.05.01; 27.05.10; 29.01.14
(591) плава, сива, црна и бела
(511) Кл. 34: цигарете.

(111) **62570** (181) **11.11.2020.**
(210) Ж- 2010-1844 (220) 11.11.2010.
(151) 31.03.2011.
(300) 11.11.2010.
(732) **DIN "Fabrika duvana" Niš a.d., u sastavu Philip Morris International**; 12. februara 74, 18000 Niš, RS
(740) "Карановић-Николић" ортачко адвокатско друштво, мр Драгомир Којић, адвокат, Лепеничка 7, 11000 Београд
(540)

(531) 19.03.03; 25.07.08; 26.03.04; 27.05.01; 27.05.10; 29.01.14
(591) зелена, сива, црна и бела
(511) Кл. 34: цигарете.

(111) **62571** (181) **11.11.2020.**
(210) Ж- 2010-1845 (220) 11.11.2010.
(151) 31.03.2011.
(300) 11.11.2010.
(732) **DIN "Fabrika duvana" Niš a.d., u sastavu Philip Morris International**; 12. februara 74, 18000 Niš, RS
(740) "Карановић-Николић" ортачко адвокатско друштво, мр Драгомир Којић, адвокат, Лепеничка 7, 11000 Београд

(540)

(531) 19.03.03; 25.07.08; 26.03.04; 27.05.01; 27.05.10; 29.01.14
(591) розе, сива, црна и бела
(511) Кл. 34: цигарете.

(111) **62572** (181) **11.11.2020.**
(210) Ж- 2010-1846 (220) 11.11.2010.
(151) 31.03.2011.
(300) 11.11.2010.
(732) **A.D. "CENTROPROIZVOD", prehrambena industrija**; Dobanovački put b.b., 11271 Surčin, Beograd, RS
(740) "Карановић-Николић" ортачко адвокатско друштво, мр Драгомир Којић, адвокат, Лепеничка 7, 11000 Београд
(540)

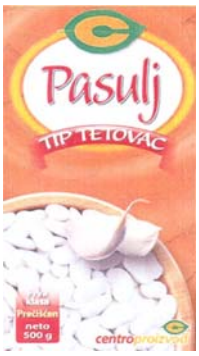


(531) 05.03.14; 05.09.06; 05.09.19; 11.03.05; 25.01.06; 26.01.02; 26.01.18; 27.05.01; 27.05.10; 29.01.15
(591) жута, наранџаста, црвена, зелена и бела
(511) Кл. 30: пасуљ.

(111) **62573** (181) **11.11.2020.**
(210) Ж- 2010-1847 (220) 11.11.2010.
(151) 31.03.2011.
(300) 11.11.2010.
(732) **Kraft Foods Schweiz Holding GmbH**; Chollerstrasse 4, 6301 Zug, CH
(740) Гордана Павловић, адвокат; Миливоје Павловић, адвокат, Мајке Јевросиме 53, , 11000 Београд

(540)

(531) 03.04.02; 25.01.01; 27.05.01; 27.05.09; 29.01.05; 29.01.15
(591) лила, бела, браон, жута, беж и златна
(511) Кл. 30: какао, чоколада, напитци од какаоа, напитци од чоколаде и препарати за такве напитке; чај; бисквити, пецива, посластице и слаткиши, нарочито шећерне и чоколадне посластице, производи од теста, производи од житарица, јестиви лед, сладолед.

---

(111) **62574** (181) **12.11.2020.**
(210) Ж- 2010-1855 (220) 12.11.2010.
(151) 31.03.2011.
(300) 12.11.2010.
(732) **SZR ZRNCO OMASTA JANO PR KOVAČICA**; JNA 57, Kovačica, RS
(740) Живко Мијатовић & Партнерс д.о.о., 11000 Београд, Таковска 58/4
(540)

(531) 01.15.09; 13.01.01; 26.01.02; 26.01.04; 26.01.18; 27.05.01; 27.05.04; 29.01.14
(591) све нијансе жуте, зелене, браон и бела
(511) Кл. 5: фармацеутски и ветеринарски препарати; санитарни препарати за медицинску употребу; дијететске супстанце прилагођене за употребу у медицини, храна за бебе; фластери, материјали за завијање; материјали за пломбирање зуба, зубарска смола; дезинфекциона средства; препарати за уништавање штеточина; фунгициди, хербициди.
Кл. 30: кафа, чај, какао, шећер, пиринач, тапиока, саго, замена кафе; брашно и производи од житарица, хлеб, колачи, посластице, сладоледи; мед, меласа, квасац, прашак за пециво; со, сенф; сирће, сосови (као додаци); зачини; лед.
Кл. 31: пољопривредни, вртларски и шумарски производи и зрневље који нису укључени у друге класе; живе животиње; свеже воће и поврће; семе, природне биљке и цвеће; храна за животиње, слад.

(111) **62575** (181) **12.11.2020.**
(210) Ж- 2010-1857 (220) 12.11.2010.
(151) 31.03.2011.
(300) 12.11.2010.
(732) **POLYSEAL, d.o.o. Privredno društvo za proizvodnju zaptivnih elemenata**; 37240 Trstenik, Svetog Save 7, RS
(740) Слободан Стојковић, Кнегиње Зорке 13, 11000 Београд
(540)

POLYSEAL

(511) Кл. 17: гума, гутаперка, каучук, азбест, лискун и производи направљени од ових материјала који нису укључени у друге класе; полупрерађени пластични производи који се користе у производњи; материјали за подбијање (подлошке), заптивање и изоловање, нарочито заптивке за примену у индустрији, посебно хидрауличне клипне заптивке; хидрауличне заптивке за клипњачу, пнеуматске заптивке за клип, пнеуматске заптивке за клипњачу, заптивке са усном, заптивке за ротационо кретање, хидрауличне заптивке кочних система, заптивни прстенови и траке, О-ринг заптивке, брисачи, заптивке за прирубнице, заптивке за пригушење вибрација, заптивке за ротационо кретање, заптивне мембране, заптивке за заштиту од прашине, потпорни прстенови за заптивке од пластике и/или гуме, делови калуповани од гуме и синтетичке гуме опште или посебне употребе, заптивне плетенице, савитљиве неметалне цеви.
Кл. 35: оглашавање; вођење послова; услуге у вези са прометом робе и услуга; пословно управљање; канцеларијски послови; комерцијално заступање; пропагандне и рекламне услуге; маркетинг; услуге истраживања тржишта; све услуге које припадају овој класи које су доступне директно са Интернета, давање и ширење информација у вези са напред наведеним услугама.
Кл. 42: саветодавне услуге у вези са пројектовањем и дизајном заптивки и заптивних прстенова, услуге дизајна, посебно услуге дизајна полупрерађених пластичних производа и хидрауличних и пнеуматских заптивних производа; заштита података; уређивање матичних и других страница на светској рачунарској мрежи - Интернету.

---

(111) **62576** (181) **12.11.2020.**
(210) Ж- 2010-1860 (220) 12.11.2010.
(151) 31.03.2011.
(300) 12.11.2010.
(732) **BEST WESTERN INTERNATIONAL, INC.**; 6201 North 24th Parkway, Phoenix, Arizona 85016-2023, US
(740) Дејан П. Богдановић и др., Влајковићева 28, 11000 Београд

(540)

(531) 24.09.03; 26.05.01; 26.05.16; 26.05.18; 27.05.01; 27.05.24
(511) Кл. 43: хотелске услуге.

---

(111) **62577** (181) **15.11.2020.**
(210) Ж- 2010-1862 (220) 15.11.2010.
(151) 31.03.2011.
(300) 15.11.2010.
(732) **AGRANELA d.o.o.**; Mirka Obradovića bb, 14000 Valjevo, RS
(540)

(531) 05.03.13; 05.03.14; 27.05.01; 27.05.17; 27.05.24; 29.01.13
(591) плава: C96%, M91%, Y4%, K1%; зелена: C95%, M2%, Y96%, K0%; бела: CMYK 0%
(511) Кл. 29: замрзнуто, сушено и кувано воће и поврће.
Кл. 30: колачи и посластице, сладолед.
Кл. 31: свеже воће и поврће.

---

(111) **62578** (181) **15.11.2020.**
(210) Ж- 2010-1863 (220) 15.11.2010.
(151) 31.03.2011.
(300) 15.11.2010.
(732) **AGRANELA d.o.o.**; Mirka Obradovića bb, 14000 Valjevo, RS
(540)

(531) 27.05.01; 27.05.02; 27.05.13; 29.01.12
(591) боја: C:100%, M:99%, Y:22%, K:9%; outline: C:16%, M:31%, Y:71%, K:1%.
(511) Кл. 29: замрзнуто, сушено и кувано воће и поврће.
Кл. 30: колачи и посластице, сладолед.
Кл. 31: свеже воће и поврће.

(111) **62579** (181) **15.11.2020.**
(210) Ж- 2010-1870 (220) 15.11.2010.
(151) 31.03.2011.
(300) 15.11.2010.
(732) **Discover Financial Services**; 2500 Lake Cook Road, Riverwoods, IL 60015, US
(740) Ана Мамић, дипл.правник, 11000 Београд, Господар Јевремова 41
(540)

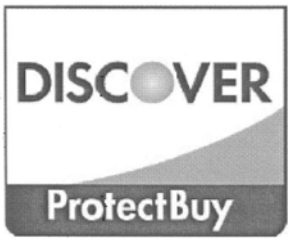


(531) 25.05.02; 26.04.02; 26.04.18; 26.15.01; 27.03.15; 27.05.01
(511) Кл. 36: финансијске услуге, нарочито банкарске услуге, услуге кредитних картица, услуге дебитних картица и трансакције на продајним местима; финансијске саветодавне услуге које се односе на безбедносну методологију за шифровање информација о плаћању и података у вези с тим; услуге идентификације купца и продавца за финансијске трансакције.

---

(111) **62580** (181) **16.11.2020.**
(210) Ж- 2010-1878 (220) 16.11.2010.
(151) 31.03.2011.
(300) 16.11.2010.
(732) **Jelena Popović**; Katanićeva br. 6, 11000 Beograd, RS
(740) Владимир М. Ђорђевић, Краља Петра бр. 44, 11000 Београд
(540)

(531) 02.09.01; 18.04.02; 24.13.22; 24.13.24; 24.17.02; 26.01.01; 26.01.16; 27.05.01
(511) Кл. 14: драгоцени метали и њихове легуре и производи од драгоцених метала или са превлаком од њих, који нису укључени у друге класе; накит, драго камење; часовничарски и хронометријски инструменти.
Кл. 16: хартија, картон и производи од њих, који нису укључени у друге класе; штампане ствари; књиговезачки материјали; фотографије; канцеларијски материјал; лепила за канцеларијске и кућне потребе; уметнички материјали; кичице;

писаће машине и канцеларијски реквизити (изузев намештаја), материјали за обуку и наставу (изузев апарата), пластични материјал за паковање (који није укључен у друге класе); штампарска слова; клишеи.
Кл. 18: кожа и имитација од коже; производи израђени од ових материјала који нису укључени у друге класе; животињска кожа, крзно; кофери и путне торбе; кишобрани, сунцобрани и штапови за ходање; бичеви, сарачка и седларска опрема.
Кл. 20: намештај, огледала, оквири за слике; производи (који нису обухваћени другим класама) од дрвета, плуте, трске, рогоза, врбовог прућа, рога, кости, слоноваче, китове кости, шкољки, ћилибара, седефа, морске пене и замене свих ових материјала, или од пластике.
Кл. 21: кућне или кухињске справе и посуде; чешљеви и сунђери, четке (изузев кичица); материјали за прављење четки; артикли који се користе при чишћењу; челична вуна; непрерађено или полупрерађено стакло (осим стакла који се користи у грађевинарству); стакларија, порцелан, фајанс, грнчарија и лончарија која није укључена у друге класе.
Кл. 25: одећа, обућа, покривала за главу.
Кл. 26: чипка и вез, траке (пантљике) и гајтани; дугмад, копче и петље, шпенадле и игле; вештачко цвеће.
Кл. 33: алкохолна пића (изузев пива).
Кл. 34: дуван; артикли за пушаче; шибице.

(111) **62581** (181) **15.11.2020.**
(210) Ж- 2010-1871 (220) 15.11.2010.
(151) 31.03.2011.
(300) 15.11.2010.85062347 14.06.2010. US
(732) **BEST WESTERN INTERNATIONAL, INC.**; 6201 North 24th Parkway, Phoenix, Arizona 85016-2023, US
(740) Дејан П. Богдановић и др., Влајковићева 28, 11000 Београд
(540)

(531) 24.09.03; 26.05.01; 26.05.16; 26.05.18; 27.05.01; 27.05.24
(511) Кл. 43: хотелске услуге.

(111) **62582** (181) **16.11.2020.**
(210) Ж- 2010-1880 (220) 16.11.2010.
(151) 31.03.2011.
(300) 16.11.2010.
(732) **Nine West Development Corporation**; 1007 Orange Street, Suite 225, 19801 Wilmington, DE, US
(740) Петошевић д.о.о., 11000 Београд, Веле Нигринове 16А
(540)

NINE LOVES

(511) Кл. 35: услуге за верне потрошаче и услуге потрошачких клубова, за комерцијалне, промотивне и/или рекламне сврхе.

(111) **62583** (181) **17.11.2020.**
(210) Ж- 2010-1890 (220) 17.11.2010.
(151) 31.03.2011.
(300) 17.11.2010.
(732) **Colgate-Palmolive Company, a Delaware corporation**; 300 Park Avenue, New York, N.Y. 10022, US
(740) Поповић А. др Слободан, адвокат, 11000 Београд, Генерал Жданова 34
(540)

(531) 10.05.01; 25.05.03; 26.04.02; 26.04.16; 26.04.18; 27.05.01; 29.01.15
(591) црвена, бела, тамноплава, светлоплава и зелена
(511) Кл. 21: четкице за зубе.

(111) **62584** (181) **01.10.2020.**
(210) Ж- 2010-1637 (220) 01.10.2010.
(151) 31.03.2011.
(300) 01.10.2010.
(732) **OPPO MEDICAL INC.**; 1030 Industry Drive, Tukwila, WA 98188, US
(740) Дејан П. Богдановић и др., Влајковићева 28, 11000 Београд
(540)

(531) 02.01.16; 02.01.23; 02.01.25; 02.03.01; 02.03.23; 02.03.25; 27.05.01; 27.05.02

(511) Кл. 10: хируршки, медицински, зубарски и ветеринарски апарати и инструменти; вештачки удови, очи и зуби; ортопедски прибор; хируршки материјали за зашивање; ваздушни душеци (мадраци) и подлоге за кревет од меморијске пене за медицинске сврхе; ваздушни јастуци и јастуци од меморијске пене за медицинску употребу; штапови за ходање за медицинске сврхе, компресионе чарапе, ортопедски умеци за пету; ортопедски улошци за обућу, ортопедске подлоге за стопала, бандаже за стопала; подметачи за седење за медицинске сврхе; дизалице за инвалиде; лифтови за инвалиде; ортопедска обућа; хемијски активиране топле и хладне терапијске облоге; пумпице са аеросолима за медицинску употребу; улошци за обућу који подупиру свод стопала; бандажи за анатомске зглобове; ћебад за медицинске сврхе; удлаге и ортозе за зглобове и екстремитете за медицинске сврхе; грудњаци, штитници, заштитни делове и стезници за медицинску употребу за глежањ, руку, леђа, грудни кош, лакат, лице, стопало, шаку, главу, колено, ногу, цеваницу, раме, бутину, лумбални појас и чланак руке; компресиони бандажи; еластични завоји; топле облоге за медицинске сврхе; медицинска паковања леда; штитници за уста за медицинску употребу; неопренски и еластични стезници за медицинску употребу за глежањ, леђа, лакат, стопало, задњу ложу, колено, бутину, цеваницу, лумбални појас и чланак руке; не-медицинске компресе; ортопедски појасеви; ортопедске протезе; ортопедски ђонови, ортопедски потпорни бандажи, ортопедски стезници; ортопедске компресе за медицинске сврхе; компресе за глежањ, руку, леђа, грудни кош, лакат, шаку, главу, цеваницу, раме, бутину, лумбални појас и чланак руке.
Кл. 28: спортска опрема, а нарочито, еластични и неопренски штитници за глежањ, лист, лакат, задњу ложу, колено, цеваницу, бутину, лумбални појас и чланак руке; заштитна опрема за спортисте, а нарочито, штитници за глежањ, руку, стопало, колено и лакат, ногу, цеваницу, бутину, лумбални појас и зглоб руке; атлетске траке (еластични завоји за спортску употребу).

(111) **62585** (181) **03.12.2020.**
(210) Ж- 2010-1979 (220) 03.12.2010.
(151) 31.03.2011.
(300) 03.12.2010.
(732) **Centro-fantastico d.o.o. Beograd**; Maršala Tolbuhina br.155, Beograd, RS
(740) "Карановић & Николић" ОД, мр Драгомир Којић, адвокат, Лепеничка 7, 11000 Београд
(540)

(531) 05.03.14; 08.01.01; 08.01.06; 25.01.01; 25.01.06; 26.01.02; 26.01.18; 27.05.01; 27.05.21; 29.01.15
(591) жута, наранџаста, окер, браон, зелена, црвена, црна и бела
(511) Кл. 30: квасац.

(111) **62586** (181) **03.12.2020.**
(210) Ж- 2010-1980 (220) 03.12.2010.
(151) 31.03.2011.
(300) 03.12.2010.
(732) **Centro-fantastico d.o.o. Beograd**; Maršala Tolbuhina br. 155, Beograd, RS
(740) "Карановић & Николић" ОД, мр Драгомир Којић, адвокат, Лепеничка 7, 11000 Београд
(540)

(531) 05.03.14; 08.07.14; 25.01.01; 25.01.06; 26.01.02; 26.01.18; 27.05.01; 27.05.21; 29.01.15
(591) жута, наранџста, окер, зелена, црвена, бордо и бела.
(511) Кл. 29: желеи.

(111) **62587** (181) **25.11.2020.**
(210) Ж- 2010-1929 (220) 25.11.2010.
(151) 31.03.2011.
(300) 25.11.2010.
(732) **SAMSUNG ELECTRONICS CO., LTD**; 416. Maetan-dong, Yeongtong-gu, Suwon-si, Gyeonggi-do, KR
(740) Павловић Гордана, Павловић Миливоје, адвокати, 11000 Београд, Мајке Јевросиме бр. 53
(540)

SAMSUNG BADA OS

(511) Кл. 9: мобилни телефони; смарт телефони; преносни компјутери; компјутерски оперативни софтвер за смарт телефоне и преносне компјутере; телевизијски пријемници.

(111) **62588** (181) **06.07.2020.**
(210) Ж- 2010-1188 (220) 06.07.2010.
(151) 31.03.2011.
(300) 06.07.2010.
(732) **Jelena Popović**; 11000 Beograd, Katanićeva br. 6, RS
(740) Владимир М. Ђорђевић, Краља Петра бр. 44, 11000 Београд

(540)

(531) 01.01.02; 01.01.10; 01.01.12; 02.09.01; 05.03.06; 05.03.15; 25.01.06; 26.01.13; 26.01.14; 26.01.15; 27.05.01; 29.01.15
(591) зелена, плава, црвена, бела, сива, црна
(511) Кл. 14: драгоцени метали и њихове легуре и производи од драгоцених метала или са превлаком од њих, који нису укључени у друге класе; накит, драго камење; часовничарски и хронометријски инструменти.
Кл. 16: хартија, картон и производи од њих, који нису укључени у друге класе; штампане ствари; књиговезачки материјали; фотографије; канцеларијски материјал; лепила за канцеларијске и кућне потребе; уметнички материјали; кичице; писаће машине и канцеларијски реквизити (изузев намештаја), материјали за обуку и наставу (изузев апарата), пластични материјал за паковање (који није укључен у друге класе); штампарска слова; клишеи.
Кл. 18: кожа и имитација од коже; производи израђени од ових материјала који нису укључени у друге класе; животињска кожа, крзно; кофери и путне торбе; кишобрани, сунцобрани и штапови за ходање; бичеви, сарачка и седларска опрема.
Кл. 20: намештај, огледала, оквири за слике; производи (који нису обухваћени другим класама) од дрвета, плуте, трске, рогоза, врбовог прућа, рога, кости, слоноваче, китове кости, шкољки, ћилибара, седефа, морске пене и замене свих ових материјала, или од пластике.
Кл. 21: кућне или кухињске справе и посуде; чешљеви и сунђери, четке (изузев кичица); материјали за прављење четки; артикли који се користе при чишћењу; челична вуна; непрерађено или полупрерађено стакло (осим стакла који се користи у грађевинарству); стакларија, порцелан, фајанс, грчарија и лончарија која није укључена у друге класе.
Кл. 25: одећа, обућа, покривала за главу.
Кл. 26: чипка и вез, траке (пантљике) и гајтани; дугмад, копче и петље, шпенадле и игле; вештачко цвеће.
Кл. 33: алкохолна пића (изузев пива).
Кл. 34: дуван; артикли за пушаче; шибице.

(111) **62589** (181) **10.06.2020.**
(210) Ж- 2010-1046 (220) 10.06.2010.
(151) 31.03.2011.
(300) 10.06.2010.

(732) **Hemijska industrija "Župa"**; Šandora Petefija bb, 37000 Kruševac, RS
(540)

LIRON ŽUPA - SC

(511) Кл. 5: препарати за заштиту биља-хербициди и фунгициди.

(111) **62590** (181) **05.11.2020.**
(210) Ж- 2010-1810 (220) 05.11.2010.
(151) 31.03.2011.
(300) 05.11.2010.
(732) **Future Media d.o.o.**; Terazije 7-9, 11000 Beograd, RS
(540)

(531) 05.03.15; 25.01.01; 27.05.01; 27.05.04
(591) црна, зелена
(511) Кл. 16: штампане ствари, нарочито периодични, научни часопис из области екологије.
Кл. 35: оглашавање путем медија, услуге рекламирања, услуге које се састоје од композиције, компилације или систематизације писаних саопштења или статистичких података и услуге као што је дељењепроспеката доректно или поштом или дистрибуција узорака.
Кл. 41: образовне услуге, разонода, организовање и вођење семинара, конференција и конгреса.

(111) **62591** (181) **30.04.2020.**
(210) Ж- 2010-746 (220) 30.04.2010.
(151) 04.04.2011.
(300) 30.04.2010.
(732) **Les Publications Conde Nast S.A., Société anonyme**; 56A, rue du Faubourg Saint-Honoré, F-75008 Paris, FR
(740) Павловић Гордана, Павловић Миливоје, адвокати, 11000 Београд, Мајке Јевросиме бр. 53
(540)

VOGUE

(531) 27.05.01
(511) Кл. 14: драгоцени метали и њихове легуре и предмети израђени од драгоцених метала или са превлаком од њих, који нису обухваћени другим класама; накит, бижутерија, драго камење; часовници и други хронометријски инструменти.

(111) **62592** (181) **16.11.2020.**
(210) Ж- 2010-1879 (220) 16.11.2010.
(151) 04.04.2011.
(300) 16.11.2010.
(732) **ContourGlobal Development s.a.r.l.**; 20 rue de la Poste, Luxembourg L 2346, LU
(740) Драгослав Ристић, Владан Малешевић, 11000 Београд, Цара Лазара бр. 7
(540)

CONTOURGLOBAL

(531) 26.11.02; 26.11.12; 26.11.13; 27.05.01
(511) Кл. 4: електрична енергија; обновљива енергија, нарочито, соларна енергија, енергија ветра, хидроелектрична енергија, геотермална енергија и енергија генерисана из биомасе.
Кл. 35: помоћ, саветодавне услуге и консултантске услуге у вези са пословним планирањем, пословним анализама, пословним управљањем, и пословним организовањем за компаније из области енергетике; консултантске услуге у области пословања за индустрију електричне енергије; консултантске услуге у области пословања и саветодавне услуге у области енергетске ефикасности; консултантске услуге у вези са развојем и формирањем пословних подухвата за индустрију обновљиве енергије; услуге управљања енергијом, нарочито, обезбеђивање услуге којом се омогућава потрошачима набавка енергије, нарочито електричне енергије, топлоте, природног гаса и обновљиве енергије, по фиксној цени; услуге снабдевача енергијом, нарочито обезбеђивање услуге којом се омогућава потрошачима набавка енергије, нарочито електричне енергије, и обновљиве енергије.
Кл. 36: консултантске услуге у вези са финансирањем пројеката у области енергетике.
Кл. 37: консултантске услуге у области изградње енергетских постројења за енергију ветра, соларну енергију, хидроелектричну енергију, геотермалну енергију и енергију добијену из биомасе; услуге инсталирања и одржавања електрана базираних на енергији конвенционалних горива, соларној енергији, енергији ветра, хидроелектричној енергији, геотермалној енергији и енергији биомасе; услуге изградње електране, услуге управљања пројектима у области одржавања и изградње, за предузећа у области производње и преноса енергије.
Кл. 39: услуге дистрибуције енергије.
Кл. 40: услуге производње енергије; услуге рециклирања енергије, нарочито прикупљање и конвертовање изгубљене енергије у електричну енергију и корисну пару; услуге генерисања електричне енергије из енергетских постројења соларне енергије, енергије ветра, хидроелектричне енергије, геотермалне енергије и енергије биомасе; услуге пружања информација, саветодавне и консултантске услуге у вези са производњом енергије, и третирањем, управљањем, рециклирањем, трансформисањем и спаљивањем отпада; услуге добијања енергије из отпада.
Кл. 42: консултантске услуге које се пружају локалној управи у области развоја услуга електричне енергије и обновљивих извора енергије; технолошке консултантске услуге у области генерисања алтернативне енергије.

(111) **62593** (181) **19.11.2020.**
(210) Ж- 2010-1900 (220) 19.11.2010.
(151) 04.04.2011.
(300) 19.11.2010.
(732) **Aleksandar Rodić**; Pčinjska br. 3, 11000 Beograd, RS
(540)

San

(531) 27.05.01; 27.05.17
(511) Кл. 16: хартија, картон и производи од њих, који нису укључени у друге класе; штампане ствари; књиговезачки материјал; фотографије; канцеларијски материјал; лепила за канцеларијске и кућне потребе; уметнички материјали; кичице; писаће машине и канцеларијски реквизити (изузев намештаја); материјали за обуку и наставу (изузев апарата); пластични материјал за паковање (који није укључен у друге класе); штампарска слова; клише.
Кл. 35: оглашавање; вођење послова; пословно управљање.
Кл. 41: образовне услуге; припремаље обуке; разонода;
спортске и културне активности.

(111) **62594** (181) **19.11.2020.**
(210) Ж- 2010-1902 (220) 19.11.2010.
(151) 04.04.2011.
(300) 19.11.2010.
(732) **Marijeta Lazor**; Braće Krkljuš 23, 21000 Novi Sad, RS
(740) Дејан Укропина, 21120 Нови Сад, Пошт. фах 59 (Максима Горког 48)
(540)

Horse Ville

(511) Кл. 41: разонода; спортске и културне активности.
Кл. 43: услуге обезбеђивања хране и пића; привремени смештај.
Кл. 44: ветеринарске услуге; хигијенска заштита и нега лепоте за људе или животиње.

(111) **62595** (181) **19.11.2020.**
(210) Ж- 2010-1901 (220) 19.11.2010.
(151) 04.04.2011.
(300) 19.11.2010.
(732) **Društvo za promet i usluge "MARSHALLAVT" D.O.O.**; Mutapova broj 1, Čačak, RS
(540)

(531) 09.03.09; 26.04.09; 26.04.16; 26.04.18; 27.05.01; 27.05.24
(591) црна, сива
(511) Кл. 25: панталоне, кошуље, кравате, џемпери, прслуци, мајице.

---

(111) **62596** (181) **23.04.2020.**
(210) Ж- 2010-693 (220) 23.04.2010.
(151) 04.04.2011.
(300) 23.04.2010.
(732) **Privredno društvo MALA KOMPANIJA d.o.o.**; 32000 Čačak, Mršinci bb, RS
(740) Гордана Примовић, 21000 Нови Сад, Васе Стајића 13
(540)

(531) 03.01.14; 03.01.17; 03.01.22; 03.01.23; 24.01.05; 24.01.15; 24.01.19; 27.05.01; 29.01.12
(591) жута и бела
(511) Кл. 5: фармацеутски препарати; санитарни препарати за медицинску употребу; дијететске супстанце прилагођене за употребу у медицини.
Кл. 39: транспортне услуге, паковање и складиштење робе.

---

(111) **62597** (181) **18.06.2020.**
(210) Ж- 2010-1095 (220) 18.06.2010.
(151) 05.04.2011.
(300) 18.06.2010.
(732) **Zdrnja Saša**; 23000 Zrenjanin, Gimnazijska 5, RS
(740) Адвокати др Миленко Манигодић и Ђуро Манигодић, 11111 Београд, Кумановска 2-б
(540)

(531) 09.01.10; 25.01.06; 27.05.01; 27.05.09; 27.05.10; 29.01.13
(591) златно жута, црна и бела.
(511) Кл. 32: пиво.

---

(111) **62598** (181) **02.07.2018.**
(210) Ж- 2008-1679 (220) 02.07.2008.
(151) 08.04.2011.
(300) 02.07.2008.
(732) **UNILEVER N.V.**; Weena 455, 3013 AL Rotterdam, NL
(740) Поповић Срђа, Поповић Гордана, Поповић Борис, Томасовић Лидија, Костић Катарина, 11000 Београд, Таковска 19
(540)

AXE INSTINCT

(511) Кл. 3: сапуни; парфимерија, етерична уља, козметика; колоњске воде, тоалетне воде, парфимисани спрејеви за тело; уља, креме и лосиони за кожу; пена за бријање, гел за бријање, лосиони за пре и после бријања; талк пудер; препарати за купање и туширање; лосиони за косу; средства за негу зуба; немедицинска средства за испирање уста; дезодоранси; анти-перспиранти за личну употребу; немедицински тоалетни препарати.

---

(111) **62599** (181) **02.11.2020.**
(210) Ж- 2010-1784 (220) 02.11.2010.
(151) 12.04.2011.
(300) 02.11.2010.
(732) **Akcionarsko društvo za proizvodnju konditorskih proizvoda "Soko Nada Štark"**; 11000 Beograd, Kumodraška 249, RS
(540)

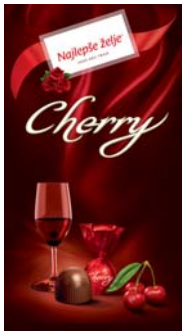


(531) 05.05.01; 05.07.16; 08.01.23; 11.03.02; 27.05.01; 29.01.15
(591) тамно браон, црвена, бордо, бела, сива, зелена, црна
(511) Кл. 30: чоколадне бомбоне.

(111) **62600** (181) **24.05.2020.**
(210) Ж- 2010-889 (220) 24.05.2010.
(151) 12.04.2011.
(300) 24.05.2010.
(732) **Gordana Stević Dulić**; 11000 Beograd, Carice Milice br. 3, RS
(540)

DTS

(511) Кл. 38: телекомуникације.
Кл. 41: образовне услуге; припремање обуке; разонода; спортске и културне активности.

(111) **62601** (181) **12.10.2020.**
(210) Ж- 2010-1687 (220) 12.10.2010.
(151) 18.04.2011.
(300) 12.10.2010.
(732) **Akcionarsko društvo "NIVA"**; 21000 Novi Sad, Privrednikova 2, RS
(540)

(531) 03.07.06; 26.01.15; 26.04.06; 26.04.18; 27.05.01; 27.05.02; 29.01.13
(591) тегет, бела и љубичаста
(511) Кл. 3: козметика, а нарочито: блазнице, крема за руке, гел за стрије, гел за вене, вата.
Кл. 5: фластери, материјал за завијање, а нарочито: медицинска вата, калико завоји, стерилне газе и компресе, памучна газа.
Кл. 10: еластични завоји, медицинске чарапе за вене.

(111) **62602** (181) **02.10.2019.**
(210) Ж- 2009-1498 (220) 02.10.2009.
(151) 18.04.2011.
(300) 02.10.2009.
(732) **"STEELSOFT" DOO**; Autoput za Novi Sad 71, 11080 Zemun, RS
(540)

(531) 27.05.01; 27.05.11; 27.05.17; 29.01.12
(591) плаво-зелена
(511) Кл. 11: електрични апарати за грејање и хлађење.

(111) **62603** (181) **28.12.2020.**
(210) Ж- 2010-2140 (220) 28.12.2010.
(151) 18.04.2011.
(300) 28.12.2010.
(732) **SANDYFORD HOLDINGS LIMITED**; Saffrey Square, Bank Lane, P.O. Box N-8188, BS-Nassau, BS
(740) Михаиловић Војислав, адвокат, 11000 Београд, Хиландарска 5
(540)

HUSSE

(511) Кл. 25: одећа, обућа и покривке за главу.
Кл. 28: играчке и производи за спорт.
Кл. 31: храна за животиње, стеља за мачке.

(111) **62604** (181) **28.12.2020.**
(210) Ж- 2010-2142 (220) 28.12.2010.
(151) 18.04.2011.
(300) 28.12.2010.
(732) **ABBOTT LABORATORIES**; 100 Abbott Park Road, Abbott Park, Illinois 60064-6408, US
(740) Живко Мијатовић & Партнерс д.о.о., 11000 Београд, Таковска 58
(540)

NUTRIVIGOR

(511) Кл. 1: хемијска једињења, наиме нутритивни елементи за употребу у прехрамбеним производима и напицима.
Кл. 5: дијететски додаци, наиме састојци који се додају прехрамбеним производима и напицима; нутритивни додаци; дијетески додаци; јестиве штанглице и напици који замењују оброк; нутритивни елементи за употребу у прехрамбеним производима и напицима за лечење губитка мишића, губитка кости, пропадање мишића и опадање снаге мишића.
Кл. 30: прехрамбени производи, наиме хранљиво ојачани напици, житарице и штангле.

(111) **62605** (181) **28.12.2020.**
(210) Ж- 2010-2143 (220) 28.12.2010.
(151) 18.04.2011.
(300) 28.12.2010.
(732) **Celsius Property B.V. Amsterdam (NL)**; Schaffhausen Branch, Spitalstrasse 5, 8200 Schaffhausen, CH
(740) Живко Мијатовић & Партнерс д.о.о., 11000 Београд, Таковска 58
(540)

TRIMAXX

(511) Кл. 1: регулатори раста биљака за употребу у пољопривреди.

(111) **62606** (181) **30.03.2021.**
(210) Ж- 2011-469 (220) 30.03.2011.
(151) 19.04.2011.
(300) 30.03.2011.
(732) **APATINSKA PIVARA APATIN DOO**; 25260 Apatin, Trg oslobođenja br. 5, RS
(740) Манигодић др Миленко, адвокат, 11000 Београд, Кумановска 2Б
(540)

(531) 03.04.07; 03.04.14; 27.05.01; 27.05.03; 29.01.15
(591) црна, бела, жута, црвена, кремасто беж
(511) Кл. 32: пиво.

---

(111) **62607** (181) **26.01.2021.**
(210) Ж- 2011-88 (220) 26.01.2011.
(151) 19.04.2011.
(300) 26.01.2011.
(732) **"Vino Župa" A.D.**; Kruševačka br. 36, 37230 Aleksandrovac, RS
(540)

(531) 27.05.01; 27.05.02; 29.01.12
(591) црвена: C-0, M-100, Y-100, K-0; жута: C-0, M-0, Y-100, K-0
(511) Кл. 32: минералне и содне воде и друга безалкохолна пића, пића од воћа и воћни сокови, сирупи и други препарати за производњу пића.

---

(111) **62608** (181) **30.03.2021.**
(210) Ж- 2011-470 (220) 30.03.2011.
(151) 19.04.2011.
(300) 30.03.2011.
(732) **APATINSKA PIVARA APATIN DOO**; 25260 Apatin, Trg oslobođenja br. 5, RS
(740) Манигодић др Миленко, адвокат, 11000 Београд, Кумановска 2Б
(540)

(531) 03.04.07; 03.04.14; 27.05.01; 27.05.03; 29.01.15
(591) црна, бела, жута, црвена, кремасто беж
(511) Кл. 32: пиво.

---

(111) **62609** (181) **23.12.2020.**
(210) Ж- 2010-2124 (220) 23.12.2010.
(151) 19.04.2011.
(300) 23.12.2010.
(732) **Novak Đoković**; Bulevar dr Zorana Đinđića br. 48 B, 11070 Novi Beograd, RS
(740) Драгољуб М. Ћосовић, Војводе Драгомира 27, 11000 Београд
(540)

NOVAK ĐOKOVIĆ - NOLE

(511) Кл. 3: парфеми; тоалетне воде; лосиони и креме за бријање; средства за личну негу и хигијену укључујући сапуне, козметику, шампоне и лосионе за негу тела и косе, паковано појединачно или као тзв. сетови.
Кл. 16: производи од хартије и картона, штампане ствари, књиге, фотографије, плакати, рекламни плакати, материјал за оглашавање и пословно управљање, канцеларијски прибор, материјал за обуку и наставу, пластични материјал за паковање, штампарски прибор, клишеи, етикете и налепнице за производе, амбалажа за паковање производа, упутства за употребу, штампани каталози, маркетиншки материјал укључујући огласе на јавним местима, улазнице за спортске и културне догађаје, CD-ови, видео и аудио траке, DVD дискови, MP3 и MP4 носачи података а наведени носачи података снимљени као и неснимљени; делови и прибор за напред наведену робу.
Кл. 18: кожа и имитација коже, производи израђени од ових материјала који нису укључени у друге класе, привесци за кључеве, ознаке на производима направљени од тих материјала, кофери, торбе и ранчеви, руксаци, кишобрани, сунцобрани, надстрешнице на спортским теренима или улазима на спортске терене, тенде; делови и прибор за напред наведену робу.
Кл. 25: одећа, обућа, капе, качкети, шешири и друга покривала за главу, нарочито спортска одећа и обућа, одећа и обућа и покривала за главу у рекламне сврхе, спортски мантили, јакне, шорцеви, мајице, дуксеви, штитиници, штитници за сунце; делови и прибор за напред наведену робу.

Кл. 28: игре и играчке; спортски и гимнастички артикли који нису обухваћени другим класама; украси за јелке укључујући светлеће украсе.
Кл. 30: кафа, чај, какао, шећер, пиринач, тапиока, саго, замена кафе; брашно и производи од житарица, хлеб, колачи, посластице, сладоледи; мед, меласа, квасац, прашак за пециво; со, сенф; сирће, сосови (као зачини); зачини; лед.
Кл. 35: оглашавање; вођење послова; пословно управљање; канцеларијски послови; малопродаја и велепродаја а нарочито малопродаја и велепродаја путем интернета.
Кл. 41: образовне услуге; припремање обуке; разонода; забава; спортске и културне активности, нарочито наведене услуге у области тениса.
Кл. 43: хотелске и ресторанске услуге и остале услуге припремања хране и пића и привременог смештаја, услуге кафеа, кетеринга, услуге служења хране и пића на и око спортских терена и места на којима се одигравају спортски и културни догађаји.

(111) **62610** (181) **23.12.2020.**
(210) Ж- 2010-2125 (220) 23.12.2010.
(151) 19.04.2011.
(300) 23.12.2010.
(732) **Novak Đoković**; Bulevar dr Zorana Đinđića br. 48 B, 11070 Novi Beograd, RS
(740) Драгољуб М. Ћосовић, Војводе Драгомира 27, 11000 Београд
(540)

(531) 21.03.01; 27.03.15; 27.05.01
(511) Кл. 3: парфеми; тоалетне воде; лосиони и креме за бријање; средства за личну негу и хигијену укључујући сапуне, козметику, шампоне и лосионе за негу тела и косе, паковано појединачно или као тзв. сетови.
Кл. 16: производи од хартије и картона, штампане ствари, књиге, фотографије, плакати, рекламни плакати, материјал за оглашавање и пословно управљање, канцеларијски прибор, материјал за обуку и наставу, пластични материјал за паковање, штампарски прибор, клишеи, етикете и налепнице за производе, амбалажа за паковање производа, упутства за употребу, штампани каталози, маркетиншки материјал укључујући огласе на јавним местима, улазнице за спортске и културне догађаје, CD-ови, видео и аудио траке, DVD дискови, MP3 и MP4 носачи података а наведени носачи података снимљени као и неснимљени; делови и прибор за напред наведену робу.
Кл. 18: кожа и имитација коже, производи израђени од ових материјала који нису укључени у друге класе, привесци за кључеве, ознаке на производима направљени од тих материјала, кофери, торбе и ранчеви, руксаци, кишобрани, сунцобрани, натстрешнице на спортским теренима или улазима на спортске терене, тенде; делови и прибор за напред наведену робу.
Кл. 25: одећа, обућа, капе, качкети, шешири и друга покривала за главу, нарочито спортска одећа и обућа, одећа и обућа и покривала за главу у рекламне сврхе, спортски мантили, јакне, шорцеви, мајице, дуксеви, штитиници, штитници за сунце; делови и прибор за напред наведену робу.
Кл. 28: игре и играчке; спортски и гимнастички артикли који нису обухваћени другим класама; украси за јелке укључујући светлеће украсе.
Кл. 30: кафа, чај, какао, шећер, пиринач, тапиока, саго, замена кафе; брашно и производи од житарица, хлеб, колачи, посластице, сладоледи; мед, меласа, квасац, прашак за пециво; со, сенф; сирће, сосови (као зачини); зачини; лед.
Кл. 35: оглашавање; вођење послова; пословно управљање; канцеларијски послови; малопродаја и велепродаја а нарочито малопродаја и велепродаја путем интернета.
Кл. 41: образовне услуге; припремање обуке; разонода; забава; спортске и културне активности, нарочито наведене услуге у области тениса.
Кл. 43: хотелске и ресторанске услуге и остале услуге припремања хране и пића и привременог смештаја, услуге кафеа, кетеринга, услуге служења хране и пића на и око спортских терена и места на којима се одигравају спортски и културни догађаји.

(111) **62611** (181) **23.12.2020.**
(210) Ж- 2010-2126 (220) 23.12.2010.
(151) 19.04.2011.
(300) 23.12.2010.
(732) **Novak Đoković**; Bulevar dr Zorana Đinđića br. 48 B, 11070 Novi Beograd, RS
(740) Драгољуб М. Ћосовић, Војводе Драгомира 27, 11000 Београд
(540)

(531) 27.05.01; 27.05.13
(511) Кл. 3: парфеми; тоалетне воде; лосиони и креме за бријање; средства за личну негу и хигијену укључујући сапуне, козметику, шампоне и лосионе за негу тела и косе, паковано појединачно или као тзв. сетови.

Кл. 16: производи од хартије и картона, штампане ствари, књиге, фотографије, плакати, рекламни плакати, материјал за оглашавање и пословно управљање, канцеларијски прибор, материјал за обуку и наставу, пластични материјал за паковање, штампарски прибор, клишеи, етикете и налепнице за производе, амбалажа за паковање производа, упутства за употребу, штампани каталози, маркетиншки материјал укључујући огласе на јавним местима, улазнице за спортске и културне догађаје, CD-ови, видео и аудио траке, DVD дискови, MP3 и MP4 носачи података а наведени носачи података снимљени као и неснимљени; делови и прибор за напред наведену робу.
Кл. 18: кожа и имитација коже, производи израђени од ових материјала који нису укључени у друге класе, привесци за кључеве, ознаке на производима направљени од тих материјала, кофери, торбе и ранчеви, руксаци, кишобрани, сунцобрани, надстрешнице на спортским теренима или улазима на спортске терене, тенде; делови и прибор за напред наведену робу.
Кл. 25: одећа, обућа, капе, качкети, шешири и друга покривала за главу, нарочито спортска одећа и обућа, одећа и обућа и покривала за главу у рекламне сврхе, спортски мантили, јакне, шорцеви, мајице, дуксеви, штитиници, штитници за сунце; делови и прибор за напред наведену робу.
Кл. 28: игре и играчке; спортски и гимнастички артикли који нису обухваћени другим класама; украси за јелке укључујући светлеће украсе.
Кл. 30: кафа, чај, какао, шећер, пиринач, тапиока, саго, замена кафе; брашно и производи од житарица, хлеб, колачи, посластице, сладоледи; мед, меласа, квасац, прашак за пециво; со, сенф; сирће, сосови (као зачини); зачини; лед.
Кл. 35: оглашавање; вођење послова; пословно управљање; канцеларијски послови; малопродаја и велепродаја а нарочито малопродаја и велепродаја путем интернета.
Кл. 41: образовне услуге; припремање обуке; разонода; забава; спортске и културне активности, нарочито наведене услуге у области тениса.
Кл. 43: хотелске и ресторанске услуге и остале услуге припремања хране и пића и привременог смештаја, услуге кафеа, кетеринга, услуге служења хране и пића на и око спортских терена и места на којима се одигравају спортски и културни догађаји.

(111) **62612** (181) **13.09.2020.**
(210) Ж- 2010-1532 (220) 13.09.2010.
(151) 19.04.2011.
(300) 13.09.2010.
(732) **DRUŠTVO ZA IZDAVAČKU DELATNOST, SPOLJNU I UNUTRAŠNJU TRGOVINU VODIČ ZA ŽIVOT DOO BEOGRAD**; Cara Dušana 74, 11000 Beograd, RS
(740) Манигодић М. Ђуро, адвокат, 11000 Београд, Кумановска 2Б
(540)

(531) 27.05.01; 27.05.05; 27.05.10
(511) Кл. 16: хартија, картон и производи од њих, који нису укључени у друге класе; штампане ствари; књиговезачки материјал; фотографије; канцеларијски материјал; лепила за канцеларијске и кућне потребе; уметнички материјали; кичице; писаће машине и канцеларијски реквизити (изузев намештаја); материјали за обуку и наставу (изузев апарата); пластични материјал за паковање (који није укључен у друге класе); штампарска слова; клишеи.
Кл. 35: оглашавање; вођење послова; пословно управљање; кацеларсијки послови.
Кл. 41: образовне услуге; припремање обуке; разонода; спортске и културне активности.

(111) **62613** (181) **16.09.2020.**
(210) Ж- 2010-1545 (220) 16.09.2010.
(151) 19.04.2011.
(300) 16.09.2010.
(732) **DRUŠTVO SA OGRANIČENOM ODGOVORNOŠĆU ZA PROIZVODNJU BOJA I LAKOVA , ZORKA COLOR ŠABAC, HAJDUK VELJKOVA BB**; Šabac, Hajduk Veljkova BB, RS
(740) Адвокати др Миленко Манигодић и Ђуро Манигодић, 11111 Београд, Кумановска 2-б
(540)

(531) 26.04.07; 26.04.16; 26.04.18; 26.11.12; 27.05.01; 29.01.13
(591) црвена, сива и бела
(511) Кл. 1: хемијски производи који се употребљавају у и ндустрији, науци, фотографији, пољопривреди, хортикултури и шумарству; непрерађене вештачке смоле, непрерађене пластичне материје; ђубрива; смеше за гашење ватре; препарати за каљење и заваривање; хемијске супстанце за очување намирница; материје за штављење; лепљиве супстанце које се употребљавају у индустрији.

Кл. 16: хартија, картон и производи од њих, који нису укључени у друге класе; штампане ствари; књиговезачки материјал; фотографије; канцеларијски материјал; лепила за канцеларијске и кућне потребе; уметнички материјали; кичице; писаће машине и канцеларијски реквизити (изузев намештаја); материјали за обуку и наставу (изузев апарата); пластични материјал за паковање (који није укључен у друге класе); штампарска слова; клишеи.

(111) **62614** (181) **16.09.2020.**
(210) Ж- 2010-1546 (220) 16.09.2010.
(151) 19.04.2011.
(300) 16.09.2010.
(732) **DRUŠTVO SA OGRANIČENOM ODGOVORNOŠĆU ZA PROIZVODNJU BOJA I LAKOVA, ZORKA COLOR ŠABAC, HAJDUK VELJKOVA BB**; Šabac, Hajduk Veljkova BB, RS
(740) Адвокати др Миленко Манигодић и Ђуро Манигодић, 11111 Београд, Кумановска 2-б
(540)

(531) 26.04.07; 26.04.16; 26.04.18; 26.11.12; 27.05.01; 29.01.13
(591) црвена, сива, бела
(511) Кл. 1: хемијски производи који се употребљавају у и ндустрији, науци, фотографији, пољопривреди, хортикултури и шумарству; непрерађене вештачке смоле, непрерађене пластичне материје; ђубрива; смеше за гашење ватре; препарати за каљење и заваривање; хемијске супстанце за очување намирница; материје за штављење; лепљиве супстанце које се употребљавају у индустрији.
Кл. 16: хартија, картон и производи од њих, који нису укључени у друге класе; штампане ствари; књиговезачки материјал; фотографије; канцеларијски материјал; лепила за канцеларијске и кућне потребе;уметнички материјали; кичице; писаће машине и канцеларијски реквизити (изузев намештаја); материјали за обуку и наставу (изузев апарата); пластични материјал за паковање (који није укључен у друге класе); штампарска слова; клишеи.

(111) **62615** (181) **16.09.2020.**
(210) Ж- 2010-1547 (220) 16.09.2010.
(151) 19.04.2011.
(300) 16.09.2010.
(732) **DRUŠTVO SA OGRANIČENOM ODGOVORNOŠĆU ZA PROIZVODNJU BOJA I LAKOVA, ZORKA COLOR ŠABAC, HAJDUK VELJKOVA BB**; Hajduk Veljkova BB, Šabac, RS
(740) Адвокати др Миленко Манигодић и Ђуро Манигодић, 11111 Београд, Кумановска 2-б
(540)

(531) 26.04.07; 26.04.16; 26.04.18; 26.11.12; 27.05.01; 29.01.13
(591) црвена, сива и бела
(511) Кл. 1: хемијски производи који се употребљавају у и ндустрији, науци, фотографији, пољопривреди, хортикултури и шумарству; непрерађене вештачке смоле, непрерађене пластичне материје; ђубрива; смеше за гашење ватре; препарати за каљење и заваривање; хемијске супстанце за очување намирница; материје за штављење; лепљиве супстанце које се употребљавају у индустрији.
Кл. 16: хартија, картон и производи од њих, који нису укључени у друге класе; штампане ствари; књиговезачки материјал; фотографије; канцеларијски материјал; лепила за канцеларијске и кућне потребе; уметнички материјали; кичице; писаће машине и канцеларијски реквизити (изузев намештаја); материјали за обуку и наставу (изузев апарата); пластични материјал за паковање (који није укључен у друге класе); штампарска слова; клишеи.

(111) **62616** (181) **03.12.2020.**
(210) Ж- 2010-1989 (220) 03.12.2010.
(151) 19.04.2011.
(300) 03.12.2010.
(732) **Bristol-Myers Squibb Sarl a French limited liability company**; 3, rue Joseph Monier, 92500 Rueil-Malmaison, FR
(740) Павловић Гордана, адвокат, Павловић Миливоје, адвокат, Мајке Јевросиме 53, 11000 Београд
(540)

UPSARIN

(511) Кл. 5: фармацеутски препарати за људску употребу.

(111) **62617** (181) **03.12.2020.**
(210) Ж- 2010-1988 (220) 03.12.2010.
(151) 19.04.2011.
(300) 03.12.2010.
(732) **M & G BRANDS, LIMITED**; Ugland House, South Church Street, P.O. Box 309, George Town, Grand Cayman, KY

(740) Живко Мијатовић & Партнерс д.о.о., 11000 Београд, Таковска 58/4
(540)

MCWILLIAM'S
HANWOOD ESTATE

(511) Кл. 33: алкохолна пића (изузев пива).

(111) **62618** (181) **03.12.2020.**
(210) Ж- 2010-1990 (220) 03.12.2010.
(151) 19.04.2011.
(300) 03.12.2010.
(732) **Bristol-Myers Squibb Company, a Delaware corporation**; 345 Park Avenue, New York, New York 10154, US
(740) Павловић Гордана, адвокат, Павловић Миливоје, адвокат, Мајке Јевросиме 53, 11000 Београд
(540)

CCNU

(511) Кл. 5: фармацеутски препарати за људску употребу.

(111) **62619** (181) **08.12.2020.**
(210) Ж- 2010-2011 (220) 08.12.2010.
(151) 19.04.2011.
(300) 08.12.2010.
(732) **TDR d.o.o.**; Obala V. Nazora br. 1, 52210 Rovinj, HR
(740) Бранко Колшек, Цвијићева 107/I/5, 11000 Београд
(540)

(531) 25.07.01; 26.04.07; 26.11.02; 26.11.06; 27.05.01; 27.07.01; 29.01.14
(591) бордо, црвена, црна и златна
(511) Кл. 34: дуван сиров и прерађен, производи од дувана, цигаре, цигарете, филтер цигарете, цигарилоси и томпус цигаре, замена за дуван која није у употреби у медицини, артикли за пушаче који нису од племенитих метала, шибице.
Кл. 35: услуге у вези са прометом робе, посебно услуге у промету дувана и дуванских производа; оглашавање; вођење послова; пословно управљање; канцеларијски послови; комерцијално заступање; пропагандне и рекламне услуге; маркетинг; услуге истраживања тржишта; услуге промоције, посебно промовисање или рекламирање културних и забавних догађаја, спортских такмичења и модних ревија; организовање и вођење сајмова и изложби у комерцијалне или рекламне сврхе; напред наведене услуге које припадају овој класи које се обављају путем интернета; давање и ширење информација у вези са наведеним услугама; излагање различите робе на једном месту укључујући дуван сиров и прерађен, производе од дувана, цигаре, цигарете, филтер цигарете, цигарилосе и томпус цигаре, замене за дуван које нису у употреби у медицини, артикле за пушаче који нису од племенитих метала, шибице, омогућавање потрошачима погодно разгледање и куповину горе наведене робе у малопродајним радњама.

(111) **62620** (181) **08.12.2020.**
(210) Ж- 2010-2012 (220) 08.12.2010.
(151) 19.04.2011.
(300) 08.12.2010.
(732) **TDR d.o.o.**; Obala V. Nazora br. 1, 52210 Rovinj, HR
(740) Бранко Колшек, Цвијићева 107/I/5, 11000 Београд
(540)

(531) 25.07.01; 26.04.07; 26.11.02; 26.11.06; 27.05.01; 27.07.01; 29.01.14
(591) бордо, црвена, бела и златна
(511) Кл. 34: дуван сиров и прерађен, производи од дувана, цигаре, цигарете, филтер цигарете, цигарилоси и томпус цигаре, замена за дуван која није у употреби у медицини, артикли за пушаче који нису од племенитих метала, шибице.
Кл. 35: услуге у вези са прометом робе, посебно услуге у промету дувана и дуванских производа; оглашавање; вођење послова; пословно управљање; канцеларијски послови; комерцијално заступање; пропагандне и рекламне услуге; маркетинг; услуге истраживања тржишта; услуге промоције, посебно промовисање или рекламирање културних и забавних догађаја, спортских такмичења и модних ревија; организовање и вођење сајмова и изложби у комерцијалне или рекламне сврхе; напред наведене услуге које припадају овој класи које се обављају путем интернета; давање и ширење информација у вези са наведеним услугама; излагање различите робе на једном месту укључујући дуван сиров и прерађен, производе од дувана, цигаре, цигарете, филтер цигарете, цигарилосе и томпус цигаре, замене за дуван које нису у употреби у медицини, артикле за пушаче који нису од племенитих метала, шибице, омогућавање потрошачима погодно разгледање и куповину горе наведене робе у малопродајним радњама.

(111) **62621** (181) **08.12.2020.**
(210) Ж- 2010-2013 (220) 08.12.2010.
(151) 19.04.2011.
(300) 08.12.2010.
(732) **TDR d.o.o.**; Obala V. Nazora br. 1, 52210 Rovinj, HR
(740) Бранко Колшек, Цвијићева 107/I/5,
11000 Београд
(540)

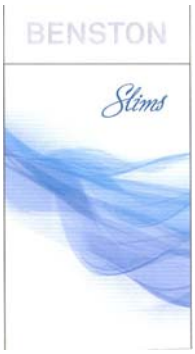


(531) 01.15.11; 09.01.20; 27.05.01; 27.05.09; 29.01.15
(591) плава, светло плава, светлије плав аи сребрна
(511) Кл. 34: дуван сиров и прерађен, производи од дувана, цигаре, цигарете, филтер цигарете, цигарилоси и томпус цигаре, замена за дуван која није у употреби у медицини, артикли за пушаче који нису од племенитих метала, шибице.
Кл. 35: услуге у вези са прометом робе, посебно услуге у промету дувана и дуванских производа; оглашавање; вођење послова; пословно управљање; канцеларијски послови; комерцијално заступање; пропагандне и рекламне услуге; маркетинг; услуге истраживања тржишта; услуге промоције, посебно промовисање или рекламирање културних и забавних догађаја, спортских такмичења и модних ревија; организовање и вођење сајмова и изложби у комерцијалне или рекламне сврхе; напред наведене услуге које припадају овој класи које се обављају путем интернета; давање и ширење информација у вези са наведеним услугама; излагање различите робе на једном месту укључујући дуван сиров и прерађен, производе од дувана, цигаре, цигарете, филтер цигарете, цигарилосе и томпус цигаре, замене за дуван које нису у употреби у медицини, артикле за пушаче који нису од племенитих метала, шибице, омогућавање потрошачима погодно разгледање и куповину горе наведене робе у малопродајним радњама.

(111) **62622** (181) **08.12.2020.**
(210) Ж- 2010-2014 (220) 08.12.2010.
(151) 19.04.2011.
(300) 08.12.2010.
(732) **TDR d.o.o.**; Obala V. Nazora br. 1, 52210 Rovinj, HR
(740) Бранко Колшек, Цвијићева 107/I/5,
11000 Београд
(540)

(531) 01.15.11; 09.01.20; 27.05.01; 27.05.09; 29.01.15
(591) љубичаста, светло љубичаста и сребрна
(511) Кл. 34: дуван сиров и прерађен, производи од дувана, цигаре, цигарете, филтер цигарете, цигарилоси и томпус цигаре, замена за дуван која није у употреби у медицини, артикли за пушаче који нису од племенитих метала, шибице.
Кл. 35: услуге у вези са прометом робе, посебно услуге у промету дувана и дуванских производа; оглашавање; вођење послова; пословно управљање; канцеларијски послови; комерцијално заступање; пропагандне и рекламне услуге; маркетинг; услуге истраживања тржишта; услуге промоције, посебно промовисање или рекламирање културних и забавних догађаја, спортских такмичења и модних ревија; организовање и вођење сајмова и изложби у комерцијалне или рекламне сврхе; напред наведене услуге које припадају овој класи које се обављају путем интернета; давање и ширење информација у вези са наведеним услугама; излагање различите робе на једном месту укључујући дуван сиров и прерађен, производе од дувана, цигаре, цигарете, филтер цигарете, цигарилосе и томпус цигаре, замене за дуван које нису у употреби у медицини, артикле за пушаче који нису од племенитих метала, шибице, омогућавање потрошачима погодно разгледање и куповину горе наведене робе у малопродајним радњама.

(111) **62623** (181) **09.12.2020.**
(210) Ж- 2010-2032 (220) 09.12.2010.
(151) 19.04.2011.
(300) 09.12.2010.
(732) **JX Nippon Oil & Energy Corporation**; 6-3 Otemachi 2-chome, Chiyodaku, Tokyo 100-8162, JP
(740) Живко Мијатовић & Партнерс д.о.о.,
11000 Београд, Таковска 58
(540)

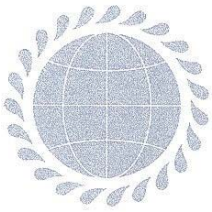

(531) 01.03.02; 01.05.01; 01.05.02; 01.05.10; 01.05.23; 29.01.13

(591) бела, сива и црна
(511) Кл. 4: моторно уље; горива, течна горива; индустријско уље; минерална уља и масти за индустријске намене (не за гориво); неминерална уља и масти за индустријске намене (не за гориво); мазива; индустријска мазива.

(111) **62624** (181) **28.09.2020.**
(210) Ж- 2010-1639 (220) 28.09.2010.
(151) 19.04.2011.
(300) 28.09.2010.
(732) **Milica Pešić Everblazing**; Gabrovački put 65, 18000 Niš, RS
(540)

(531) 01.15.05; 14.01.15; 27.05.01; 29.01.13
(591) црна, сива, бела, жута, наранџаста
(511) Кл. 3: парфимерија, козметика.
Кл. 18: животињска кожа, крзно, кофери и путне торбе.
Кл. 25: одећа, обућа, покривала за главу.

(111) **62625** (181) **27.10.2020.**
(210) Ж- 2010-1758 (220) 27.10.2010.
(151) 19.04.2011.
(300) 27.10.2010.
(732) **INTERCHEM-HIM D.O.O.**; Kneza Lazara A2, Jagodina, RS
(540)

FitoSense

(531) 27.05.01; 29.01.03
(591) зелена
(511) Кл. 5: дијететске супстанце прилагођене за употребу у медицини.

(111) **62626** (181) **17.11.2020.**
(210) Ж- 2010-1884 (220) 17.11.2010.
(151) 19.04.2011.
(300) 17.11.2010.
(732) **CITY ROCK DOO**; Autoput 20, zgrada 4, lok. 5, 11000 Beograd-Zemun, RS
(540)

(531) 27.05.01; 27.05.17; 27.05.19; 27.05.22
(511) Кл. 25: капе, качкети, шешири, шалови, мараме, пелерине, капути, јакне, прслуци, сакои, блејзери, џемпери, ролке, кошуље, блузе, тунике, дуксеви, мајице, тренерке, поткошуље, гаће, боксерице, грудњаци, бодији, пиџаме, спаваћице, баде мантили, панталоне, фармерке, шорцеви, бермуде, сукње, хаљине, ципеле, патике, чизме, јапанке, сандале, папуче.

(111) **62627** (181) **15.11.2020.**
(210) Ж- 2010-1866 (220) 15.11.2010.
(151) 19.04.2011.
(300) 15.11.2010.
(732) **Koncern za proizvodnju i promet konditorskih proizvoda "BAMBI-BANAT" AD**; Bulevar Zorana Djindjića 8A, 11070 Novi Beograd, RS
(740) Адвокати др Миленко Манигодић и Ђуро Манигодић, 11111 Београд, Кумановска 2-б
(540)

(531) 03.04.07; 26.01.02; 26.01.15; 26.01.18; 26.04.01; 26.04.18; 27.05.01; 27.05.09; 29.01.15
(591) црвена, браон, тамно браон, беж и бела
(511) Кл. 30: посластице са чоколадом.

(111) **62628** (181) **02.12.2020.**
(210) Ж- 2010-1965 (220) 02.12.2010.
(151) 19.04.2011.
(300) 02.12.2010.
(732) **Privredno društvo za trgovinu, proizvodnju i usluge "EURODOM" DOO** ; Beograd - Veliki Mokri Lug, Nikole Grulovića 71E, RS
(740) Ненадовић Ненад, Пива Караматијевића 18/29, 11000 Београд
(540)

EURODOM
KUPATILA // SANITARIJE // KERAMIKA

(531) 26.11.09; 27.05.01; 27.05.04; 27.05.09; 27.05.10; 29.01.12
(591) црна, бела, плава

(511) Кл. 19: грађевински материјали (неметални); чврсте неметалне цеви за грађевине; асфалт, црна смола и битумен; неметалне преносне грађевине; споменици, који нису од метала.
Кл. 20: намештај, огледала, оквири за слике; производи (који нису обухваћени другим класама) од дрвета, плуте, трске, рогоза, врбовог прућа, рога, кости, слоноваче, китове кости, шкољки, ћилибара, седефа, морске пене и замене свих ових материјала, или од пластике.
Кл. 21: кућне или кухињске справе и посуде; чешљеви и сунђери; четке (изузев кичица); материјали за прављење четки; артикли који се користе при чишћењу; челична вуна; непрерађено или полупрерађено стакло (осим стакла које се користи у грађевинарству); стакларија, порцелан, фајанс, грнчарија и лончарија која није укључена у друге класе.

(111) **62629** (181) **10.12.2020.**
(210) Ж- 2010-2039 (220) 10.12.2010.
(151) 19.04.2011.
(300) 10.12.2010.2010719215 15.06.2010. RU and 85062539 14.06.2010. US
(732) **Sporting Supplies International, Inc.**; 1225 N. Lance Lane, Anaheim, California 92806, US
(740) Петошевић д.о.о., Веле Нигринове 16А, 11000 Београд
(540)

WPA

(511) Кл. 13: Приоритет US 85062539 од 14.06.2010. године
Кл. 13: муниција; муниција за ватрено оружје; рамови за муницију; кутије за муницију великог калибра; патроне за муницију великог калибра; муниција за оружје малог калибра
Приоритет RU 2010719215 од 15.06.2010. године
Кл. 13: ватрено оружје; муниција и пројектили, експлозив; средства за ватромет; компоненте за муницију; муниција средњег калибра; сачма; меци; ракете; патроне; балистички пројектили; балистичко оружје; ракете (пројектили); касете; касете за ватрено оружје; касете за пројектиле; касете за експлозив; лансери за муницију; држачи за муницију; касетне кесе; касетни сандуци; кесе за муницију; реденици за држање касета и рамова за муницију; ватрено оружје; ловачко оружје и стрељачко оружје; пиштољи и револвери; карабини; пушке; артиљеријско оружје (топови); моторизовано оружје; сузавац оружје; ловачко ватрено оружје, спортско ватрено оружје; пиштољи (наоружање); ваздушни пиштољи (оружје); платформе са којих се врши гађање; машинске пушке; топови; тенкови (наоружање); апарати на касетно пуњење; ракетни бацачи; сигналне ракете; харпунске пушке (оружје); ручна лична опрема за самодбрану која није смртоносна; носачи наоружања (артиљерија); кундаци; минобацачи (ватрено оружје); делови, прибор и додатна опрема за све наведене производе; торбе за ношење ватреног оружја; заштитне футроле прилагођене за ватрено оружје; заштитни омоти прилагођени за ватрено оружје; стругала за чишћење ватреног оружја; чекићи за пиштоље и пушке; лежишта за ватрено оружје; поклопци за ватрено оружје; цеви пиштоља, пушчане цеви; одбојници за цеви ватреног оружја; нишани за ватрено оружје; мушице за ватрено оружје; штитници нишана за ватрено оружје; нишани, осим телескопских, за ватрено оружје; нишанска огледала за пиштоље и пушке; пригушивачи за ватрено оружје; кочнице за орозе на пиштољима и пушкама; троножци и постоља за ватрено оружје; клинасти причвршћивач постоља тешког наоружања; четке за чишћење ватреног оружја; реденици за оружје; ремени за оружје; касетне кесе; футроле за пиштоље; футроле за пушке; експлозиви; касете са експлозивом; експлозиви на бази амонијак нитрата; основни детонатори (фитиљи); фитиљи за експлозиве за употребу у рудницима; динамит; оловна сачма за лов; детонатори; детонаторске каписле осим играчака; ударне каписле осим играчака; мине (експлозиви); детонаторски утикачи; фитиљ и за експлозиве; детонаторски фитиљи за експлозиве; конопци за окидање паљбе за експлозиве; експлозив у праху; рогови за пуњење барутом; средства за ватромет; пиротехнички производи; пиротехничка муниција; сигнали за маглу, експлозив; бенгалске ватре; делови и опрема за сву горе наведену робу.

(111) **62630** (181) **16.04.2020.**
(210) Ж- 2010-635 (220) 16.04.2010.
(151) 19.04.2011.
(300) 16.04.2010.
(732) **AGROSIT SEMENARSTVO d.o.o.**; Miće Milića bb, 37230 Aleksandrovac, RS
(540)

(531) 05.03.15; 26.03.01; 26.03.05; 26.03.18; 26.04.02; 26.04.06; 26.04.07; 26.04.11; 26.04.18; 27.05.01; 27.05.05
(526) brojler
(511) Кл. 29: свеже, замрзнуто и прерађено месо, живина и дивљач, као и месне прерађевине.
Кл. 31: приплодна јаја, једнодневни товни пилићи, матична јата живине.

(111) **62631** (181) **26.07.2020.**
(210) Ж- 2010-1396 (220) 26.07.2010.
(151) 19.04.2011.
(300) 26.07.2010.

(732) **Gimnazija "Svetozar Marković"**;
Branka Radičevića 1, Niš, RS
(540)

ФЕСТИВАЛ
НАУК НИЈЕ БАУК

(531) 27.05.01; 28.05.00; 29.01.12
(591) црна, зелена
(511) Кл. 16: рекламне кесе од папира и картона; билтени, флајери, брошуре, улазнице и плакати.
Кл. 41: стручно оспособљавање и усавршавање наставника; одржавање округлих столова, трибина и предавања која захтевају специфичан јединствени начин презентовања од стране организатора фестивала; обучавање, едукација ученика и студената за самостално руковање апаратима и употребу апаратура; приближавање и презентовање високо техничких и технолошких иновација најширим слојевима друштва на интересантан и афирмативан начин користећи сопствене ресурсе и најновије методе у циљу преношења знања; коришћење одређеног материјала из природе и свакодневног живота као базу за стварање уметничких дела и предмета; коришћење одређених хемијских, физичких, биолошких, математичких итд. процеса увођење и примена специфичних алтернативних метода образовања и васпитања пре свега, школске деце, а посредно и свих структура становништва.
Кл. 42: истраживање у области науке и технологије; објављивање стручних радова и реферата из области науке и технологије.

---

(111) **62632** (181) **04.06.2020.**
(210) Ж- 2010-973 (220) 04.06.2010.
(151) 20.04.2011.
(300) 04.06.2010.
(732) **PTD "RAZVITAK GST"**; 14000 Valjevo, Nikole Tesle 1, RS
(540)

Razvitak - GST
VALJEVO

(531) 26.03.01; 26.03.23; 26.04.03; 26.04.11; 26.04.18; 26.07.05; 27.05.01; 27.05.09; 27.05.24
(511) Кл. 9: прикључнице, прекидачи, тастери, склопке, сијалична грла, клеме-редне стезаљке.

---

(111) **62633** (181) **01.04.2021.**
(210) Ж- 2011-506 (220) 01.04.2011.
(151) 20.04.2011.
(300) 01.04.2011.
(732) **GLAXO GROUP LIMITED**; Glaxo Wellcome House, Berkeley Avenue, Greenford, Middlesex UB6 0NN, GB
(740) Јанковић др Иван, адвокат, 11000 Београд, Влајковићева 28
(540)

NILACEF

(511) Кл. 5: фармацеутски и медицински препарати и супстанце.

---

(111) **62634** (181) **28.12.2020.**
(210) Ж- 2010-2144 (220) 28.12.2010.
(151) 20.04.2011.
(300) 28.12.2010.
(732) **Colgate-Palmolive Company (A Delaware Corporation)**; 300 Park Avenue, New York, New York 10022, US
(740) Адвокатска канцеларија Карановић & Николић, 11000 Београд, Лепеничка 7
(540)

AJAX

(511) Кл. 3: средства за бељење и друге супстанце за употребу у перионицама; препарати за чишћење, полирање, рибање и нагризање, сапуни; парфимерија, етерична уља, козметика, лосиони за косу; пасте за зубе.

---

(111) **62635** (181) **22.12.2020.**
(210) Ж- 2010-2111 (220) 22.12.2010.
(151) 20.04.2011.
(300) 22.12.2010.
(732) **ZENTIVA, k.s.**; U kabelovny 130, 102 37 Praha 10, Dolní Měcholupy, CZ
(740) Драгослав М. Ристић, Владан О. Малешевић, адвокати, Београд, Цара Лазара 7
(540)

IBALGIN

(511) Кл. 5: фармацеутски препарат који садржи ибупрофен са антифлогистичким, антипиретским и аналгетским својствима који се не користи у дерматолошким дисциплинама.

---

(111) **62636** (181) **23.12.2020.**
(210) Ж- 2010-2123 (220) 23.12.2010.
(151) 20.04.2011.
(300) 23.12.2010.
(732) **RED BULL GmbH**; Am Brunnen 1, 5330 Fuschl am See , AT
(740) Гордана Павловић, Миливоје Павловић, Мајке Јевросиме 53, 11000 Београд
(540)

CRVENI BIK

(511) Кл. 32: безалкохолни напитци укључујући освежавајућа пића; енергетска пића, напитци од сурутке; изотонична, хипертонична и хипотонична пића (која користе спортисти и/или за потребе спортиста); пиво, пиво од слада, пиво од жита, тамно (портер) пиво, светло (але) пиво, стоут пиво, лагер пиво; безалкохолни напитци од слада; минерална вода и содне воде; воћни напитци и воћни сокови; сирупи, есенције и други препарати за производњу пића као и пенушајуће таблете и пенушајући прашкови за пића и безалкохолне коктеле.

(111) **62637** (181) **21.04.2020.**
(210) Ж- 2010-725 (220) 21.04.2010.
(151) 21.04.2011.
(300) 21.04.2010.
(732) **Planinarsko-smučarsko društvo "Gvozdac"**; Kraljevo, Veljka Vlahovića 31/10, RS
(540)

НАРЦИСУ У ПОХОДЕ

(511) Кл. 41: спортске и културне активности.

(111) **62638** (181) **30.01.2019.**
(210) Ж- 2009-187 (220) 30.01.2009.
(151) 26.04.2011.
(300) 30.01.2009.
(732) **"BOŽEN KOSMETIK" d.o.o.**; Kolarčeva 4, 11 000 Beograd, RS
(540)

(531) 27.05.01; 27.05.09; 27.05.10; 27.05.13
(511) Кл. 3: козметички препарати; тоалетни препарати; мириси; препарати за негу косе, балзами, регенератори, гелови, брилијантин, боје за косу, уља, колор шампони, лосиони за косу; препарати за негу лица, млека, тоници, гелови, маске за лице, пилинзи, препарати против акни; препарати за негу тела, уља, креме, млека; препарати против целулита; препарати за депилацију; етерична уља; препарати за негу ноктију; препарати за уградњу вештачких ноктију; препарати за негу вештачких ноктију; остали козметички препарати; сапуни; парфимерија; козметички препарати за купање на бази малине; козметички препарати на бази кавијара.
Кл. 21: крпе за чишћење лица; рукавице за чишћење лица.
Кл. 25: рукавице од текстила.
Кл. 29: конзервисано, сушено воће; сушене конзервисане алге.
Кл. 35: услуге у вези са прометом робе: козметички препарати; тоалетни препарати; мириси; препарати за негу косе, балзами, регенератори, гелови, брилијантин, боје за косу, уља, колор шампони, лосиони за косу; препарати за негу лица, млека, тоници, гелови, маске за лице, пилинзи, препарати против акни; препарати за негу тела, уља, креме, млека; препарати против целулита; препарати за депилацију; етерична уља; препарати за негу ноктију; препарати за уградњу вештачких ноктију; препарати за негу вештачких ноктију; остали козметички препарати; сапуни; парфимерија; козметички препарати за купање на бази малине; козметички препарати на бази кавијара; оглашавање; вођење послова; пословно управљање; канцеларијски послови; услуге рекламирања; испитивање тржишта.
Кл. 44: хигијенска заштита и нега лепоте за људе.

(111) **62639** (181) **30.01.2019.**
(210) Ж- 2009-188 (220) 30.01.2009.
(151) 26.04.2011.
(300) 30.01.2009.
(732) **"BOŽEN KOSMETIK" d.o.o.**; Kolarčeva 4, 11 000 Beograd, RS
(540)

(531) 27.05.01; 27.05.13
(511) Кл. 3: козметички препарати; тоалетни препарати; мириси; препарати за негу косе, балзами, регенератори, гелови, брилијантин, боје за косу, уља, колор шампони, лосиони за косу; препарати за негу лица, млека, тоници, гелови, маске за лице, пилинзи, препарати против акни; препарати за негу тела, уља, креме, млека; препарати против целулита; препарати за депилацију; етерична уља; препарати за негу ноктију; препарати за уградњу вештачких ноктију; препарати за негу вештачких ноктију; остали козметички препарати; сапуни; парфимерија; козметички препарати за купање на бази малине; козметички препарати на бази кавијара.
Кл. 21: крпе за чишћење лица; рукавице за чишћење лица.
Кл. 25: рукавице од текстила.
Кл. 29: конзервисано, сушено воће; сушене конзервисане алге.
Кл. 35: услуге у вези са прометом робе: козметички препарати; тоалетни препарати; мириси; препарати за негу косе, балзами, регенератори, гелови, брилијантин, боје за косу, уља, колор шампони, лосиони за косу; препарати за негу лица, млека, тоници, гелови, маске за лице, пилинзи, препарати против акни; препарати за негу тела, уља, креме, млека; препарати против целулита; препарати за депилацију; етерична уља; препарати за негу ноктију; препарати за уградњу вештачких ноктију; препарати за негу вештачких ноктију; остали козметички препарати; сапуни; парфимерија; козметички препарати за купање на бази малине; козметички препарати на бази кавијара; оглашавање; вођење послова; пословно управљање; канцеларијски послови; услуге рекламирања; испитивање тржишта.
Кл. 44: хигијенска заштита и нега лепоте за људе.

(111) **62640** (181) **18.11.2020.**
(210) Ж- 2010-1895 (220) 18.11.2010.
(151) 26.04.2011.
(300) 18.11.2010.
(732) **RESERVE DOO**; Vojvode Živojina Mišića 1, Pančevo, RS
(540)

LAND

(511) Кл. 34: дуван; артикли за пушаче; шибице.

---

(111) **62641** (181) **22.12.2020.**
(210) Ж- 2010-2118 (220) 22.12.2010.
(151) 26.04.2011.
(300) 22.12.2010.009499831 05.11.2010. EM
(732) **Milliken & Company**; 920 Milliken Road, Spartanburg, SC 29303, US
(740) ПЕТОШЕВИЋ д.о.о., Веле Нигринове 16А, 11000 Београд
(540)

Milliken

(531) 27.05.01; 27.05.13
(511) Кл. 2: боје у праху; пигменти; лако растворљиве боје; распршавајући индикатори боје који се користе у примени вештачких ђубрива, фунгицида, хербицида и инсектицида; боје за водене површине за бојење из естетских разлога.

---

(111) **62642** (181) **23.12.2020.**
(210) Ж- 2010-2120 (220) 23.12.2010.
(151) 26.04.2011.
(300) 23.12.2010.
(732) **NIHON NOHYAKU Co., Ltd.**; 2-5, Nihonbashi 1-chome, Chuo-ku, Tokyo, JP
(740) Драгослав Ристић, Владан Малешевић, 11000 Београд, Цара Лазара бр. 7
(540)

KABUKI

(511) Кл. 1: средства за задржавање лишћа, средства за одбацивање лишћа (дефолијанти), средства за контролу изданака, препарати за регулацију раста биљака.
Кл. 5: инсектициди, фунгициди, хербициди, акарициди, митициди.

---

(111) **62643** (181) **04.02.2020.**
(210) Ж- 2010-137 (220) 04.02.2010.
(151) 27.04.2011.
(300) 04.02.2010.
(732) **TRADUS ALLEGRO AG**; Grafenaustrasse 11, CH-6300 Zug, CH
(740) Дејан П. Богдановић и др., Влајковићева 28, 11000 Београд
(540)

ALLEGRO

(511) Кл. 9: апарати за снимање, пренос и/или репродукцију звука, слика и/или података; компјутерски хардвер и уграђени програми; компјутерски софтвер који се односи на вођење online трговине; звучни и видео записи; кутије, спремишта, делови и опрема за сву наведену робу.
Кл. 35: online посредовање у циљу договарања привредних трансакција између трећих лица у куповини и продаји робе; пружање услуга online рекламног простора за друге; пружање услуга оглашавања; омогућавање online огласног простора; услуге рекламирања и промовисања; услуге поређења цена; пружање сервисних информација које се односе на наведене услуге.
Кл. 38: телекомуникације; пренос порука и слика компјутерским путем; услуге мобилне телефоније; комуникација уз помоћ компјутерских терминала; комуникација путем телефона; услуге слања порука; изнајмљивање телекомуникационе опреме, укључујући телефоне; услуге телекомуникационог усмеравања и спајања; услуге за телефонске конференције; телефонске услуге; информације, савети и консултације које се односе на горе наведене услуге.

---

(111) **62644** (181) **01.04.2021.**
(210) Ж- 2011-507 (220) 01.04.2011.
(151) 27.04.2011.
(300) 01.04.2011.
(732) **GLAXO GROUP LIMITED**; Glaxo Wellcome House, Berkeley Avenue, Greenford, Middlesex UB6 0NN, GB
(740) Богдановић Дејан, адвокат, 11000 Београд, Влајковићева 28
(540)

FORCAS

(511) Кл. 5: фармацеутски и медицински препарати и супстанце.

---

(111) **62645** (181) **22.12.2020.**
(210) Ж- 2010-2117 (220) 22.12.2010.
(151) 27.04.2011.
(300) 22.12.2010.
(732) **TOYOTA JIDOSHA KABUSHIKI KAISHA (also trading as TOYOTA MOTOR CORPORATION)**; 1, Toyota-cho, Toyota-shi, Aichi-ken, JP
(740) ПЕТОШЕВИЋ д.о.о., Веле Нигринове 16А, 11000 Београд

(540)

(531) 09.05.12; 15.07.09; 26.01.01; 26.01.16
(511) Кл. 12: аутомобили и њихови саставни, структурни делови.

(111) **62646** (181) **31.03.2020.**
(210) Ж- 2010-502 (220) 31.03.2010.
(151) 28.04.2011.
(300) 31.03.2010.
(732) **HENKEL MERIMA D.O.O. KRUŠEVAC**; ul. Stanoja Atanackovića bb, 37000 Kruševac, RS
(740) Михаиловић Војислав, адвокат, 11000 Београд, Хиландарска 5
(540)

GLAMUR
ŠAMPON

(531) 27.05.01; 27.05.10
(511) Кл. 3: шампони за косу.

(111) **62647** (181) **03.11.2020.**
(210) Ж- 2010-1800 (220) 03.11.2010.
(151) 28.04.2011.
(300) 03.11.2010.
(732) **KOTEKS d.o.o. Preduzeće za proizvodnju i preradu mesa**; Surčin, Braće Nikolić br. 26, RS
(540)

KOTEKS

(531) 26.01.03; 26.01.18; 26.04.06; 26.04.18; 26.07.05; 27.05.01; 27.05.24; 29.01.13
(591) црвена, бела и наранџаста
(511) Кл. 29: месо, риба, живина и дивљач; месне прерађевине, конзервисано, замрзнуто, сушено и кувано воће и поврће; желеи, џемови и компоти, јаја, млеко и млечни производи, јестива уља и масти.

(111) **62648** (181) **28.05.2020.**
(210) Ж- 2010-929 (220) 28.05.2010.
(151) 29.04.2011.
(300) 28.05.2010.
(732) **GOMADJO Co.d.o.o.**; 11000 Beograd, Stjepana Filipovića 28A, RS
(540)

DETIA GAS-EX-B

(511) Кл. 1: хемијски производи који се употребљавају у пољопривреди и индустрији.
Кл. 5: препарат за уништавање штеточина.

(111) **62649** (181) **29.11.2020.**
(210) Ж- 2010-1935 (220) 29.11.2010.
(151) 29.04.2011.
(300) 29.11.2010.
(732) **"GRAND PROM" akcionarsko društvo za proizvodnju, promet i usluge Beograd**; Surčinska ulica broj 6a, 11000 Beograd, RS
(540)

Coffee +

(531) 24.17.05; 27.05.01; 29.01.12
(591) сива, зелена
(511) Кл. 30: кафа, чај, замена кафе.
Кл. 43: услуга обезбеђивања хране и пића.

(111) **62650** (181) **29.11.2020.**
(210) Ж- 2010-1936 (220) 29.11.2010.
(151) 29.04.2011.
(300) 29.11.2010.
(732) **"GRAND PROM" akcionarsko društvo za proizvodnju, promet i usluge Beograd**; Surčinska ulica broj 6a, 11000 Beograd, RS
(540)

grand KAFA 3in1 Coffee+

(531) 05.07.01; 08.03.01; 08.07.21; 11.03.04; 27.05.01; 29.01.15
(591) светло зелена, бела, окер, црвена, тамно зелена, црна
(511) Кл. 30: кафа, чај, замена кафе.
Кл. 43: услуга обезбеђивања хране и пића.

(111) **62651** (181) **30.11.2020.**
(210) Ж- 2010-1948 (220) 30.11.2010.
(151) 29.04.2011.
(300) 30.11.2010.
(732) **UDRUŽENJE LJUBITELJA SKIJANJA SKIBUS**; Makedonska 28/8, 11000 Beograd, RS

(540)

(531) 01.03.01; 01.03.06; 01.15.07; 06.01.02; 06.01.04; 06.19.19; 27.05.01; 29.01.14
(591) плава, жута, бела, црна
(511) Кл. 35: оглашавање, вођење послова, пословно управљање, канцеларијски послови.
Кл. 39: транспортне услуге, паковање и складиштее робе, организовање путовања.
Кл. 41: образовне услуге, припремање обуке, разонода, спортске и културне активности.
Кл. 43: услуге обезбеђивања хране и пића, привремени смештај.

---

(111) **62652** (181) **26.08.2020.**
(210) Ж- 2010-1468 (220) 26.08.2010.
(151) 29.04.2011.
(300) 26.08.2010.
(732) **Aleksandar Jevtović**; Vojvode Brane 38/13, 11000 Beograd, RS
(740) Ана Мамић, Београд, Господар Јевремова 41
(540)

(531) 05.03.15; 27.05.01; 27.05.09; 28.05.00
(511) Кл. 12: возила; апарати за кретање по земљи, ваздуху или води.
Кл. 20: намештај; производи, који нису обухваћени другим класама, од дрвета, плуте, трске, рогоза, прућа.
Кл. 28: играчке; спортска опрема и артикли који нису обухваћени другим класама.

---

(111) **62653** (181) **25.11.2020.**
(210) Ж- 2010-1926 (220) 25.11.2010.
(151) 29.04.2011.
(300) 25.11.2010.
(732) **CITY ROCK DOO**; Autoput 20, zgrada 4, lokal 5, 11080 Beograd-Zemun, RS
(740) Ђорђе Андровић, Гандијева 115а, локал 12, 11070 Нови Београд
(540)

ROCK BOY

(511) Кл. 18: кожа и имитација коже, производи израђени од ових материјала који нису укључени у друге класе; животињска кожа; крзно; кофери и путне торбе; кишобрани, сунцобрани и штапови за ходање; бичеви, сарачка и седларска опрема.
Кл. 25: одећа, обућа, покривала за главу.
Кл. 28: игре и играчке; гимнастички и спортски артикли који нису обухваћени другим класама; украси за јелке.

---

(111) **62654** (181) **17.08.2020.**
(210) Ж- 2010-1421 (220) 17.08.2010.
(151) 29.04.2011.
(300) 17.08.2010.
(732) **JLO HOLDING COMPANY, LLC, Murphy & Kress, Inc.**; 2401 Main Street, 90405 Santa Monika, US
(740) Зејаковић Маријана, 11000 Београд, Владислава Бајчевића 21/8
(540)

J.LO

(511) Кл. 3: препарати за тело и негу; сапуни; парфимерија; мирисне воде свих врста; парфеми; парфемске воде; тоалетне воде; дезодоранси; етерична уља; лосиони за косу; шампони и препарати за негу косе; козметика; креме за кожу; лосиони за козметичке сврхе; препарати за бријање и препарати за негу лица у току бријања; пасте за зубе; козметички препарати за купање; кармини; лакови за нокте; шминка.
Кл. 9: наочаре за сунце; наочаре; снимљени и неснимљени носачи звука и видео записа; компакт дискови; дискови за снимање; кинематографски филмови.
Кл. 14: ручни сатови; накит.
Кл. 18: кожа и имитација коже и производи који су израђени од ових материјала који нису укључени у друге класе; животињска кожа; кофери; актен ташне; путне торбе; торбе; спортске торбе; ручне торбе; школски ранчеви; руксаци; сетови торби за путовања; роба у области кожне галантерије; новчаници; џепни новчаници; улошци за кључеве; торбе које се носе око струка и торбе које се носе око кукова; кишобрани; сунцобрани; штапови за ходање.
Кл. 25: одећа; обућа; покривала за главу; мушка и женска одећа; дечија одећа; беби опрема (одећа); комбинезони; женски доњи веш; корсети; чарапе; каишеви; трегери; шалови; рукавице; кравате; траке за косу; мушки и женски купаћи костими; одећа за планинарење и пењање; мушке и женске ципеле; дечија обућа; обућа за планинарење, пењање и спољне активности; одећа, обућа и покривала за главу за фудбал, кошарку, рукомет и одбојку; одећа за џогинг, фитнес и гимнастику; одећа, обућа и покривала за главу за тенис, сквош и бадмингтон; одећа, обућа и покривала за главу за ролере, вожњу скејта и вожњу ролшуа, за хокеј, и бокс; одећа, обућа и покривала за главу за бициклизам; одећа, обућа и покривала за главу за јахање; одећа, обућа и покривала за главу за голф; одећа, обућа и покривала за главу за спортове на води; одећа, обућа и покривала за

главу за сурфовање, једрење, веслање, веслање кануа и роњење; одећа, обућа и покривала за главу за алпско скијање; скијање и сноуборд; одећа, обућа и покривала за главу за клизање и хокеј.
Кл. 35: услуге продаје на мало: препарата за тело и негу; сапуна; парфимерије; мирисних вода свих врста; парфема; парфемских вода; тоалетних вода; дезодоранса; етеричних уља; лосиона за косу; шампона и препарата за негу косе; козметике; крема за кожу; лосиона за козметичке сврхе; препарата за бријање и препарата за негу лица у току бријања; паста за зубе; козметичких препарата за купање; кармина; лакова за нокте; шминке; наочара за сунце; наочара; снимљених и неснимљених носача звука и видео записа; компакт дискова; дискова за снимање; кинематографских филмова; ручних сатова; накита; коже и имитације коже и производа који су израђени од ових материјала; животињске коже; кофера; актен ташна; путних торби; торби; спортских торби; ручних торби; школских ранчева; руксака; сетова торби за путовања; робе у области кожне галантерије; новчаника; џепних новчаника; уложака за кључеве; торби које се носе око струка и торби које се носе око кукова; кишобрана; сунцобрана; штапова за ходање; одеће; обуће; покривала за главу; мушке и женске одеће; дечије одеће; беби опреме (одећа); комбинезона; женског доњег веша; корсета; чарапа; каишева; трегера; шалова; рукавица; кравата; трака за косу; мушких и женских купаћих костима; одеће за планинарење и пењање; мушких и женских ципела; дечије обуће; обуће за планинарење, пењање и спољне активности; одеће, обуће и покривала за главу за фудбал, кошарку, рукомет и одбојку; одеће за џогинг, фитнес и гимнастику; одеће, обуће и покривала за главу за тенис, сквош и бадмингтон; одеће, обуће и покривала за главу за ролере, вожњу скејта и вожњу ролшуа, за хокеј, и бокс; одеће, обуће и покривала за главу за бициклизам; одеће, обуће и покривала за главу за јахање; одеће, обуће и покривала за главу за голф; одеће, обуће и покривала за главу за спортове на води; одеће, обуће и покривала за главу за сурфовање, једрење, веслање, веслање кануа и роњење; одеће, обуће и покривала за главу за алпско скијање; скијање и сноуборд; одеће, обуће и покривала за главу за клизање и хокеј.

---

(111) **62655** (181) **17.08.2020.**
(210) Ж- 2010-1422 (220) 17.08.2010.
(151) 29.04.2011.
(300) 17.08.2010.
(732) **JLO HOLDING COMPANY, LLC, Murphy & Kress, Inc.**; 2401 Main Street, 90405 Santa Monika, US
(740) Зејаковић Маријана, 11000 Београд, Владислава Бајчевића 21/8
(540)

(531) 24.17.02; 27.05.01; 27.05.10; 27.05.17; 27.05.19
(511) Кл. 3: препарати за тело и негу; сапуни; парфимерија; мирисне воде свих врста; парфеми; парфемске воде; тоалетне воде; дезодоранси; етерична уља; лосиони за косу; шампони и препарати за негу косе; козметика; креме за кожу; лосиони за козметичке сврхе; препарати за бријање и препарати за негу лица у току бријања; пасте за зубе; козметички препарати за купање; кармини; лакови за нокте; шминка.
Кл. 9: наочаре за сунце; наочаре; снимљени и неснимљени носачи звука и видео записа; компакт дискови; дискови за снимање; кинематографски филмови.
Кл. 14: ручни сатови; накит.
Кл. 18: кожа и имитација коже и производи који су израђени од ових материјала који нису укључени у друге класе; животињска кожа; кофери; актен ташне; путне торбе; торбе; спортске торбе; ручне торбе; школски ранчеви; руксаци; сетови торби за путовања; роба у области кожне галантерије; новчаници; џепни новчаници; улошци за кључеве; торбе које се носе око струка и торбе које се носе око кукова; кишобрани; сунцобрани; штапови за ходање.
Кл. 25: одећа; обућа; покривала за главу; мушка и женска одећа; дечија одећа; беби опрема (одећа); комбинезони; женски доњи веш; корсети; чарапе; каишеви; трегери; шалови; рукавице; кравате; траке за косу; мушки и женски купаћи костими; одећа за планинарење и пењање; мушке и женске ципеле; дечија обућа; обућа за планинарење, пењање и спољне активности; одећа, обућа и покривала за главу за фудбал, кошарку, рукомет и одбојку; одећа за џогинг, фитнес и гимнастику; одећа, обућа и покривала за главу за тенис, сквош и бадмингтон; одећа, обућа и покривала за главу за ролере, вожњу скејта и вожњу ролшуа, за хокеј, и бокс; одећа, обућа и покривала за главу за бициклизам; одећа, обућа и покривала за главу за јахање; одећа, обућа и покривала за главу за голф; одећа, обућа и покривала за главу за спортове на води; одећа, обућа и покривала за главу за сурфовање, једрење, веслање, веслање кануа и роњење; одећа, обућа и покривала за главу за алпско скијање; скијање и сноуборд; одећа, обућа и покривала за главу за клизање и хокеј.
Кл. 35: услуге продаје на мало: препарата за тело и негу; сапуна; парфимерије; мирисних вода свих врста; парфема; парфемске воде; тоалетне воде; дезодоранса; етеричних уља; лосиона за косу; шампона и препарата за негу косе; козметике; крема за кожу; лосиона за козметичке сврхе; препарата за бријање и препарата за негу лица у току бријања; пасте за зубе; козметичких препарата за купање; кармина; лакова за нокте; шминке; наочара за сунце; наочара; снимљених и неснимљених носача звука и видео записа; компакт дискова; дискова за снимање; кинематографских филмова; ручних сатова; накита; коже и имитације коже и производа који су израђени

од ових материјала, животињске коже; кофера; актен ташни, путних торби; торби; спортских торби; ручних торби; школских ранчева; руксака; сетова торби за путовања; робе у области кожне галантерије; новчаника; џепних новчаника; уложака за кључеве; торби које се носе око струка и торби које се носе око кукова; кишобрана; сунцобрана; штапова за ходање; одеће; обуће; покривала за главу; мушке и женске одеће; дечије одеће; беби опреме (одећа); комбинезона; женског доњег веша; корсета; чарапа; каишева; трегера; шалова; рукавица; кравата; трака за косу; мушких и женских купаћих костима; одеће за планинарење и пењање; мушких и женских ципела; дечије обуће; обуће за планинарење, пењање и спољне активности; одеће, обуће и покривала за главу за фудбал, кошарку, рукомет и одбојку; одеће за џогинг, фитнес и гимнастику; одеће, обуће и покривала за главу за тенис, сквош и бадмингтон; одеће, обуће и покривала за главу за ролере, вожњу скејта и вожњу ролшуа, за хокеј, и бокс; одеће, обуће и покривала за главу за бициклизам; одеће, обуће и покривала за главу за јахање; одеће, обуће и покривала за главу за голф; одеће, обуће и покривала за главу за спортове на води; одеће, обуће и покривала за главу за сурфовање, једрење, веслање, веслање кануа и роњење; одеће, обуће и покривала за главу за алпско скијање; скијање и сноуборд; одеће, обуће и покривала за главу за клизање и хокеј.

(111) **62656** (181) **25.11.2020.**
(210) Ж- 2010-1928 (220) 25.11.2010.
(151) 29.04.2011.
(300) 25.11.2010.
(732) **CITY ROCK DOO**; Autoput 20, zgrada 4, lokal 5, 11080 Beograd-Zemun, RS
(740) Ђорђе Андровић, Гандијева 115а, локал 12, 11070 Нови Београд
(540)

ROCK GIRL

(511) Кл. 18: кожа и имитација коже, производи израђени од ових материјала који нису укључени у друге класе; животињска кожа; крзно; кофери и путне торбе; кишобрани, сунцобрани и штапови за ходање; бичеви, сарачка и седларска опрема.
Кл. 25: одећа, обућа, покривала за главу.
Кл. 28: игре и играчке; гимнастички и спортски артикли који нису обухваћени другим класама; украси за јелке.

(111) **62657** (181) **23.09.2020.**
(210) Ж- 2010-1578 (220) 23.09.2010.
(151) 29.04.2011.
(300) 23.09.2010.008982191 25.03.2010. EM
(732) **Reckitt Benckiser (Switzerland) AG**; Richtistrasse 5, CH-8304, Wallisellen, Zurich, CH
(740) Живко Мијатовић & Партнерс, д.о.о., Таковска 58/14, 11000 Београд
(540)

RIBBONS SCENTS

(511) Кл. 3: парфимисани препарати за ваздух; потпури, етерична уља, парфимисани спрејеви за просторије; препарати за парфимисање или ароматизацију ваздуха.
Кл. 4: свеће; свеће са аромом или миришљаве свеће.
Кл. 5: препарати за освежавање ваздуха; препарати за прочишћавање ваздуха; освеживачи за просторије; дезодоранси који нису за личну употребу; препарати за неутрализовање непријатних мириса.
Кл. 11: апарати и инструменти, сви за парфимисање, прочишћавање или освежавање ваздуха; делови и опрема за све поменуте робе.

(111) **62658** (181) **17.08.2020.**
(210) Ж- 2010-1423 (220) 17.08.2010.
(151) 29.04.2011.
(300) 17.08.2010.
(732) **SANTAIR d.o.o.**; Tadeuša Košćuška br. 30, 11000 Beograd, RS
(740) Шундрић Марија, Тадеуша Кошћушка бр. 30, 11000 Београд
(540)

SOJOURN

(511) Кл. 5: фармацеутски и ветеринарски препарати; санитарни препарати за медицинску употребу.

(111) **62659** (181) **25.11.2020.**
(210) Ж- 2010-1927 (220) 25.11.2010.
(151) 29.04.2011.
(300) 25.11.2010.
(732) **CITY ROCK DOO**; Autoput 20, zgrada 4, lokal 5, 11080 Beograd-Zemun, RS
(740) Ђорђе Андровић, Гандијева 115а, локал 12, 11070 Нови Београд
(540)

ROCK MISS

(511) Кл. 18: кожа и имитација коже, производи израђени од ових материјала који нису укључени у друге класе; животињска кожа; крзно; кофери и путне торбе; кишобрани, сунцобрани и штапови за ходање; бичеви, сарачка и седларска опрема.
Кл. 25: одећа, обућа, покривала за главу.
Кл. 28: игре и играчке; гимнастички и спортски артикли који нису обухваћени другим класама; украси за јелке.

(111) **62660** (181) **06.09.2020.**
(210) Ж- 2010-1510 (220) 06.09.2010.
(151) 29.04.2011.
(300) 06.09.2010.
(732) **Japan Tobacco Inc.**; 2-2-1 Toranomon, Minato-ku, Tokyo , JP
(740) Петошевић д.о.о., Веле Нигринове 16А, 11000 Београд
(540)

WINSTON

TRUE AMERICAN FLAVOR SINCE 1954

(531) 03.07.01; 03.07.16; 05.03.14; 26.11.12; 27.05.01; 27.05.10; 27.07.01
(511) Кл. 34: дуван, било да је прерађен или непрерађен; дуван за пушење, дуван за лулу, дуван за ручно увијање, дуван за жвакање, снус дуван; цигарете, цигаре, цигарилоси; супстанце за пушење које се продају одвојено или помешано са дуваном, а које се не користе у медицинске или лековите сврхе; дуван за ушмркавање; артикли за пушаче; папир за цигарете, тубе за цигарете и шибице.

(111) **62661** (181) **20.08.2020.**
(210) Ж- 2010-1438 (220) 20.08.2010.
(151) 29.04.2011.
(300) 20.08.2010.
(732) **Popović Milan**; 18300 Pirot, Partizanska 26, RS
(540)

КОАЛИЦИЈА ЗА ПИРОТ

(531) 02.09.01; 26.04.02; 26.04.14; 27.05.01; 27.05.10
(511) Кл. 16: хартија, картон и производи од њих, који нису укључени у друге класе; штампане ствари; фотографије; материјали за обуку и наставу (изузев апарата); пластични материјал за паковање (који није укључен у друге класе); клишеи.
Кл. 35: оглашавање; вођење послова; пословвно управљање; канцеларијски послови.
Кл. 41: образовне услуге; припремање обуке; разонода; спортске и културне активности.

(111) **62662** (181) **22.07.2020.**
(210) Ж- 2010-1291 (220) 22.07.2010.
(151) 29.04.2011.
(300) 22.07.2010.
(732) **EUROPAPRESS HOLDING d.o.o.**; Koranska 2, 10000 Zagreb, HR
(740) Адвокатска Канцеларија Карановић & Николић, Лепеничка 7, Београд
(540)

HEJ!HEJ!

(511) Кл. 16: хартија, картон и производи од њих, који нису укључени у друге класе; штампане ствари; књиговезачки материјал; фотографије; канцеларијски материјал; лепила за канцеларијске и кућне потребе; уметнички материјали; писаће машине и канцеларијски реквизити (изузев намештаја); материјали за обуку или наставу (изузев апарата); пластични материјал за паковање (који није укључен у друге класе); нарочито: новине; књиге; периодични часописи/ревије; штампане публикације; брошуре; обрасци (штампани) фотографије; фотогравуре; графички прикази и репродукције; ознаке (натписи) папирнате или картонске; изводи из компјутерских библиографских база у штампаном облику; каталози; карте (топографске и географске); књиговезачки материјал клишеи за штампу; књижице; календари; папир за паковање; књиговезачки апарати и машине (канцеларијски); траке за повез књига; плакати (постери); проспекти; разгледнице; штампарска слова; штампарска писма, знакови; штампарске поле; мала штампарска равнала; штампарски производи; кориснички приручник; уџбеници; опрема за обучавање (осим уређаја); заштитни знакови (папирнати); зборници.
Кл. 35: оглашавање и рекламирање; вођење послова; пословно управљање; канцеларијски послови, нарочито: услуге у вези са прометом робе наведене у класи 16, на мало и на велико; секретарске услуге; мулти медијске услуге; мултимедијски маркетинг/планирање; услуге агенција за пословне информације; дистрибуција узорака; претрага података у компјутерским датотекама (за друге); претраживање и уношење података у компјутерске базе; уређење рекламне документације изнајмљивање канцеларијских уређаја и опреме; услуге оглашавања; истраживање јавног мишљења; услуге у вези са запошљавањем особља; вођење књига; објављивање рекламних текстова; обрада података; обрада текста; израда платних спискова и листова; оглашавање путем интернета; оглашавање у мултимедијском простору; огласне услуге у вези с продајом производа; изнајмљивање рекламних простора; изнајмљивање рекламног простора у медијима и мулти медијском простору; изнајмљивање рекламног материјала; услуге претплате новина (за треће особе); организација изложби у комерцијалне или рекламне сврхе; услуге плакатирања; помоћ у вођењу послова, пословна претраживања; организовање саветовања о пословној организацији; пословно заступање у вези са

наступима уметника; услуге унапређења продаје за друга лица; представљање производа; припрема обавештења за јавност; припрема и израда текстова за штампу; заступничке услуге (набавка робе и услуга за друга предузећа); припрема, вођење, организација саветовања, сајмова, предавања, течаја, симпозијума других приредаба у комерцијалне и рекламне сврхе; професионално саветовање на подручју комерцијале и организације послова, укључујући саветовање у области новинарства, издавачке делатности и мулти медијских услуга; рачуноводство; истраживање и скупљање података из медија; ширење рекламних огласа; рекламирање; услуге агенције за рекламирање; рекламне услуге; оглашавање на радију и телевизији; умножавање докумената; систематизација информација у компјутерске базе; статистичке информације; пропагандни послови; услуге стручњака за пословну ефикасност; професионално пословно саветовање; анализа производне цене; саветовање при запошљавању; консултације за вођење послова; саветовање о организацији и вођењу послова; саветовање у области рачуноводства, вођења књига и пореско саветовање, транскрипцијске услуге; услуге проучавања тржишта и истраживање јавног мишљења; проучавање тржишта у области мултимедијских и медијских услуга; услуге агенције за увоз и извоз робе; вођење компјутерских картотека; услуге везане за припрему реклама за штампу; услуге заступања страних предузећа и управљање холдинг друштвима; агенције за запошљавање, укључујући нуђење података о слободним радним местима у штампаном облику и on-line.

Кл. 41: образовне услуге; припремање обуке; разонода; спортске и културне активности, нарочито: организација забавних, пословних и културних приредаба и такмичења; друштвене приредбе; организације музичких приредаба; услуге проналажења простора за музичке приредбе; добротворне приредбе; спортске приредбе и такмичења; организација изложби у културне или образовне сврхе; информације о приредбама; дигитална обрада слика; продукција филмова; фотографисање; фотографске репортаже; објављивање текстова (осим рекламних текстова); образовање и подучавање у области издавачке делатности; обука и подучавање у области телекомуникација; биоскопи; нуђење он-лине електронских публикација; издавање књига; обрада (издавање) видео трака; објављивање електронских књига и часописа на компјутерској мрежи; организација, вођење и извођење разговора, конференција, конгреса, семинара, симпозијума; информације о обуци; организација и вођење наставних радионица (школовање); организација наступа (услуге импресариа); организација забавних приредби на улици; услуге професионалног усмеравања; продукција представа и приредби; услуге преводилаштва; резервација улазница за представе; снимање на микрофилм; услуге новинарских извештача; снимање на видеотраке; услуге обраде говора и слике; услуге у области снимања микрофилма; услуге у области дописних курсева; забавне делатности; издавачке делатности новина, часописа, књига, текстова; издавачке делатности он-лине новина, часописа, књига, текстова услуге електронске издавачке делатности; посредовање и приказивање документарних и образовних филмова, видео филмова, радијских програма и телевизијских спотова; услуге он-лине пружања општих свакодневних информација и занимљивости нарочито информација о поп култури и спорту, о аутомобилизму, о телевизијским програмима, о пословним информацијама, о времену, хороскоп, здравствених савета те посредовање наведених информација, такође он-лине услуге на подручју издавачке делатности.

---

(111) **62663** (181) **23.08.2020.**
(210) Ж- 2010-1453 (220) 23.08.2010.
(151) 29.04.2011.
(300) 23.08.2010.
(732) **Fabrika za preradu voća i povrća NECTAR doo**; Novosadski put 9, Bačka Palanka, RS
(540)

(531) 01.15.19; 05.03.13; 26.01.02; 26.01.18; 27.05.01; 27.05.17; 29.01.15
(591) наранџаста, бела, плава, зелена, црвена
(511) Кл. 30: чај.

---

(111) **62664** (181) **21.05.2020.**
(210) Ж- 2010-870 (220) 21.05.2010.
(151) 29.04.2011.
(300) 21.05.2010.
(732) **"SCOOTERS-MOTO MANIA" D.O.O.**; Branka Radičevića br. 58, Laćarak, RS
(540)

(531) 18.01.05; 26.01.02; 26.01.16; 26.01.21; 27.05.01; 27.05.11; 29.01.15
(591) наранџаста, бела, црна, плава, зелена.
(511) Кл. 35: увоз и продаја скутера и пратеће опреме.

(111) **62665** (181) **21.10.2019.**
(210) Ж- 2009-1600 (220) 21.10.2009.
(151) 29.04.2011.
(300) 21.10.2009.
(732) **"POWER SYMBOL TECHNOLOGY" D.O.O. BEOGRAD, MILUTINA MILANKOVIĆA 11 B**; BEOGRAD, MILUTINA MILANKOVIĆA 11 B, RS
(540)

(531) 24.17.25; 27.05.01; 27.05.09; 27.05.10; 29.01.13
(591) црна 100% K (black), зелена 100% C (cyan), 100% Y (yellow), црвена 100% M (magenta), 100% Y (yellow)
(511) Кл. 42: научне и технолошке услуге и истраживање и пројектовање у вези наведених услуга; услуге индустријске анализе и истраживања; пројектовање и развој компјутерског хардвера и софтвера.

---

(111) **62666** (181) **01.12.2020.**
(210) Ж- 2010-1963 (220) 01.12.2010.
(151) 29.04.2011.
(300) 01.12.2010.
(732) **Marriott Worldwide Corp., a Maryland (USA) corporation**; 10400 Fernwood Road, Bethesda, MD 20817, US
(740) Петошевић д.о.о., Веле Нигринове 16А, 11000 Београд
(540)

MARRIOTT

(511) Кл. 36: услуге у вези са непокретностима, наиме услуге у вези са развојем, куповином, продајом, лизингом, финансирањем, руковођењем, управљањем, изнајмљивањем, промоцијом и посредовањем великим становима, становима, становима у власништву станара, имовином у власништву на одређено време, вилама, викендицама и непокретностима свих врста, као и са објектима и помоћним просторијама у вези са тим; брокерске услуге у вези са непокретностима.
Кл. 43: услуге хотела; услуге ресторана, кетеринга, бара и салона; услуге одмаралишта и услуге смештаја; обезбеђивање просторија опште намене за састанке, конференције и изложбе; обезбеђивање просторија за банкете и друштвену намену, за специјалне прилике; и услуге резервације за хотелски смештај.

---

(111) **62667** (181) **01.12.2020.**
(210) Ж- 2010-1964 (220) 01.12.2010.
(151) 29.04.2011.
(300) 01.12.2010.
(732) **Marriott Worldwide Corp., a Maryland (USA) corporation**; 10400 Fernwood Road, Bethesda, MD 20817, US
(740) Петошевић д.о.о., Веле Нигринове 16А, 11000 Београд
(540)

(531) 27.05.01; 27.05.17
(511) Кл. 36: услуге у вези са непокретностима, наиме услуге у вези са развојем, куповином, продајом, лизингом, финансирањем, руковођењем, управљањем, изнајмљивањем, промоцијом и посредовањем великим становима, становима, становима у власништву станара, имовином у власништву на одређено време, вилама, викендицама и непокретностима свих врста, као и са објектима и помоћним просторијама у вези са тим; брокерске услуге у вези са непокретностима.
Кл. 43: услуге хотела; услуге ресторана, кетеринга, бара и салона; услуге одмаралишта и услуге смештаја; обезбеђивање просторија опште намене за састанке, конференције и изложбе; обезбеђивање просторија за банкете и друштвену намену, за специјалне прилике; и услуге резервације за хотелски смештај.

---

(111) **62668** (181) **26.11.2020.**
(210) Ж- 2010-1934 (220) 26.11.2010.
(151) 29.04.2011.
(300) 26.11.2010.10/3 741 952 28.05.2010. FR
(732) **EDENRED**; 166-180 Boulevard Gabriel Péri, 92240 Malakoff, FR
(740) Петошевић д.о.о., Веле Нигринове 16А, 11000 Београд
(540)

(531) 01.05.01; 01.05.23; 01.05.25; 26.04.06; 26.04.10; 26.04.13; 26.04.18; 27.05.01; 27.05.21; 29.01.13
(591) црвена (panton 1788), плава (panton 276).
(511) Кл. 9: магнетски кодиране, оптичке или картице са интегрисаним колима (смарт картице), са или без контакта (радиофреквентног, инфрацрвеног или другог), за једнократну употребу или пуњиве, припејд или постпејд, које могу да обављају једну

или више електронских услуга, и које се употребљавају у разним врстама апликација, посебно у контроли приступа физичких лица, контроли приступа компјутерским системима, контроли потрошачких картица; софтвер за обраду комерцијалних налога (куповину); софтвер за обраду података, софтвер за прављење, управљање, ажурирање и коришћење база података, софтвер за омогућавање приступа електронском систему порука, софтвер за омогућавање приступа компјутерској или мрежи за пренос података, нарочито глобалној комуникационој мрежи (као што је интернет) или приватној или мрежи са ограниченим приступом (као што је интранет); компјутерски сервери, компјутери, телематски и телефонски терминали, нарочито они за глобалне комуникационе мреже (као што је интернет) или приватне или мреже са ограниченим приступом (као што је интранет); компјутерске периферије, укључујући мониторе за компјутере; модеми; конектори за комуникационе мреже, нарочито за компјутер или телефон; апарати за примање и слање комуникација; интерактивне справе за компјутер; компјутерске мреже, нарочито локалне компјутерске мреже, наиме, опрема за обраду података, компјутерски софтвер (наснимљен); електронске публикације које се могу преузети преко интернета.

Кл. 16: штампане ствари укључујући часописе, новине, проспекте, приручнике, брошуре; токени, картице, карте, купони, прибор за писање и канцеларијске потрепштине (изузев намештаја).

Кл. 35: управљање (рачуноводство, администрација), анализа, обрада нематеријалних и поверљивих комерцијалних информација у области хотелске индустрије, ресторана (хране), трговине, послова и финансија; администрација комерцијалних налога (куповина); вођење послова, комерцијална администрација; услуге комерцијалне администрације за набављање роба и услуга помоћу електронских картица, купона, ваучера или бонова; саветовање, консултације, информације, стручни савети у вези са организацијом и вођењем послова; услуге пословног информисања у вези са ширењем и коришћењем припејд картица, поклон картица и других ваучера за плаћање; управљање потрошачким рачунима укључујући информације у вези са припејд картицама, поклон картицама и другим ваучерима за плаћање; административни савети за организовање планова штедње унутар компаније; истраживања и испитивања тржишта; пословне истраге; економска предвиђања; сакупљање (нарочито састављање) и систематизација података у централизоване датотеке, нарочито у компјутерске базе података; књиговодство и сређивање фактура; писање и уношење административне и комерцијалне кореспонденције; састављање и проверавање извода рачуна, припремање пореских, рачуноводствених и компанијских изјава и докумената; рачуноводствене анализе, нарочито анализе трошкова производње и комерцијалних трошкова; статистичке информације и истраживања; оглашавање, укључујући оглашавање на електронским и компјутерским медијима, дистрибуција узорака и проспеката укључујући и путем електронских и компјутерских комуникационих мрежа; изнајмљивање простора за оглашавање, укључујући електронске и компјутерске медије; организовање акција за јачање лојалности купца; услуге промоције производа; изнајмљивање и ширење материјала за оглашавање (летака, проспеката, узорака и штампаних ствари) [оглашавање путем директне поште]; оглашавање и ажурирање материјала за оглашавање, укључујући и путем електронских и компјутерских комуникационих мрежа; односи са јавношћу; организација изложби и трговачких сајмова у комерцијалне или сврхе оглашавања, укључујући електронске и компјутерске медије; избор и регрутовање особља за друге, укључујући путем електронских и компјутерских комуникационих мрежа; пословне процене; уговарања комерцијалних контаката (савети у потрази за пословним партнерима; административно и комерцијално организовање односа) између професионалних купаца и продаваца нове и половне опреме или између муштерија и оних који пружају услуге; савети, анализе и стручни савети у процењивању неопходних административних мера за рад са комерцијалним налозима (куповином), обезбеђивање хране, прехрамбених производа и услуга у домаћинству; регрутовање и вођење особља за агенције и привременог особља; испитивања, истраживања и консултације у вези са оцењивањем и побољшањем радних услова за запослене (ревизија пословне организације).

Кл. 36: издавање, компензација, повраћај ваучера, карата, купона, одрезака, припејд или дебитних картица или било ког другог средства плаћања нарочито преко компјутерске мреже, које омогућава организацију плаћања обезбеђивања хране и прехрамбених производа и било којих других производа или услуга; услуге кредитних картица и потрошачких картица; управљање финансијским предностима у вези са коришћењем потрошачке картице, услуга потрошачких картица (изузев за сврхе оглашавања) које омогућава да се из тих предности извуче корист; послови осигурања, финансијски и монетарни послови; савети, консултације, информације и стручни савети у области финансија; фактурисање, управљање протоком новца (за друге), наплаћивање дугова, трансфер средстава електронским путем; услуге финансирања за набављање робе или услуга путем електронских картица, купона, ваучера или бонова; управљање апартманима и некретнинама; изнајмљивање станова и некретнина; инвестициони фондови и капиталне инвестиције; управљање инвестиционим фондовима, састављање и управљање финансијски корисних портфолија, финансијске радње које укључују организовање и управљање штедним плановима код запослених; савети за организовање и управљање планова штедње унутар компаније.

Кл. 43: услуге хотела, ресторана (хране); услуге припремања оброка (хране и пића) и услуге домаће кухиње; услуге резервације хотела и пансиона, услуге информација у области хотела и ресторана (хране); вртићи, обданишта, јаслице.

(111) **62669** (181) **13.10.2020.**
(210) Ж- 2010-1693 (220) 13.10.2010.
(151) 29.04.2011.
(300) 13.10.2010.
(732) **AD IMLEK**; Beograd, Padinska Skela, Industrijsko naselje bb, RS
(540)

(531) 19.07.25; 24.15.01; 24.15.13; 26.01.02; 26.01.18; 26.04.18; 27.05.01; 29.01.15
(591) плава, зелена, жута, нијансе љубичасте, бела
(511) Кл. 29: јогурт.

(111) **62670** (181) **30.11.2020.**
(210) Ж- 2010-1945 (220) 30.11.2010.
(151) 29.04.2011.
(300) 30.11.2010.
(732) **SAMLING ELEGANT LIVING GROUP CO. LTD.**; Romasco Place, Wickhams Cay 1, P.O. Box 3140, Road Town, Tortola, British VIrgin Islands, VG
(740) Влаховић Слободан, адвокат, 11070 Нови Београд, Радоја Дакића 35/32
(540)

(531) 25.01.25; 27.05.01; 27.05.17
(511) Кл. 19: подови, који нису од метала; подне плочице, које нису од метала; подна оплата од дрвне грађе; паркетна подна облога; вишеслојна паркетна подна облога; подне даске.

(111) **62671** (181) **25.03.2021.**
(210) Ж- 2011-451 (220) 25.03.2011.
(151) 29.04.2011.
(300) 25.03.2011.
(732) **BOSNALIJEK, Farmaceutska i hemijska industrija d.d.**; 71000 Sarajevo, Jukićeva 53, BA
(740) Братислав Новаковић, адвокат, 11000 Београд, Мике Аласа 24
(540)

MELPAMID

(511) Кл. 5: фармацеутски производи.

(111) **62672** (181) **08.11.2020.**
(210) Ж- 2010-1817 (220) 08.11.2010.
(151) 29.04.2011.
(300) 08.11.2010.
(732) **Akcionarsko društvo za proizvodnju konditorskih proizvoda SOKO NADA ŠTARK**; 11000 Beograd, Kumodraška ulica 249, RS
(540)

(531) 27.05.01; 27.05.03; 27.05.13; 29.01.01
(591) црвена, бела
(511) Кл. 30: кафа, чај, какао, шећер, замена кафе, брашно и производи од житарица, колачи, посластице, сладоледи, чоколаде, бомбоне, кекс, бисквит, вафел производи, слани штапићи, флипс.

(111) **62673** (181) **12.11.2020.**
(210) Ж- 2010-1861 (220) 12.11.2010.
(151) 29.04.2011.
(300) 12.11.2010.
(732) **OLD NAVY (ITM) INC.**; 2 Folsom Street, San Francisco, California, US
(740) Дејан П. Богдановић и др., Влајковићева 28, 11000 Београд
(540)

(531) 26.01.02; 26.01.18; 27.05.01; 27.05.17; 27.05.24
(511) Кл. 25: одећа, обућа, покривала за главу.

(111) **62674** (181) **15.11.2020.**
(210) Ж- 2010-1869 (220) 15.11.2010.
(151) 29.04.2011.
(300) 15.11.2010.
(732) **Discover Financial Services**; 2500 Lake Cook Road, Riverwoods, IL 60015, US
(740) Ана Мамић, дипл.правник, 11000 Београд, Господар Јевремова 41
(540)

PROTECTBUY

(511) Кл. 36: финансијске услуге, нарочито банкарске услуге, услуге кредитних картица, услуге дебитних картица и трансакције на продајним местима; финансијске саветодавне услуге које се односе на безбедоносну методологију за шифровање информација о плаћању и података у вези с тим; услуге идентификације купца и продавца за финансијске трансакције.

(111) **62675** (181) **03.12.2020.**
(210) Ж- 2010-1981 (220) 03.12.2010.
(151) 29.04.2011.
(300) 03.12.2010.
(732) **MAGIC CITY D.O.O.**; Trg Bratstva jedinstva 16, Bačka Palanka, RS
(740) Аничић Славко, адвокат, Цара Лазара бр. 3, 11000 Београд
(540)

alessandro®
INTERNATIONAL

(531) 03.07.04; 27.05.01; 27.05.07; 27.05.10
(511) Кл. 3: средства за бељење и друге супстанце за употребу у перионицама; препарати за чишћење, полирање, рибање и нагризање; сапуни; парфимерија, етерична уља, козметика, лосиони за косу; пасте за зубе; дезодоранси за личну употребу; санитарни препарати.
Кл. 5: фармацеутски и ветеринарски препарати; санитарни препарати за медицинску употребу; дијететске супстанце прилагођене за употребу у медицини, храна за бебе; фластери, материјали за завијање; материјали за пломбирање зуба, зубарска смола; дезинфекциона средства; препарати за уништавање штеточина; фунгициди, хербициди; санитарни препарати за употребу у медицини и за личну хигијену; дезодоранси који нису за личну употребу; цигарете без дувана за медицинске сврхе.
Кл. 44: медицинске услуге; ветеринарске услуге; хигијенска заштита и нега лепоте за људе или животиње; агрикултурне, хортикултурне и шумарске услуге; медицинске, хигијенске и услуге неге лепоте које пружају лица или установе људима и животињама; такође обухвата услуге на пољу агрикултуре, хортикултуре и шумарства.

(111) **62676** (181) **06.12.2020.**
(210) Ж- 2010-1995 (220) 06.12.2010.
(151) 29.04.2011.
(300) 06.12.2010.
(732) **APATINSKA PIVARA APATIN DOO**; 25260 Apatin, Trg Oslobođenja 5, RS
(740) Адвокати др Миленко Манигодић и Ђуро Манигодић, 11111 Београд, Кумановска 2-б
(540)

Pivo za sve.
Apatinsko®

(531) 25.01.06; 25.01.15; 27.05.01; 27.05.09; 29.01.14
(591) црвена, зелена, црна и бела
(511) Кл. 32: пиво.

(111) **62677** (181) **06.12.2020.**
(210) Ж- 2010-1997 (220) 06.12.2010.
(151) 29.04.2011.
(300) 06.12.2010.
(732) **Henkel Merima d.o.o.**; Stanoja Atanackovića bb, RS-37000 Kruševac, RS
(740) Драгољуб Ћосовић, Војводе Драгомира 27, 11000 Београд
(540)

MERIX BELA RUŽA

(511) Кл. 3: препарати за бељење и друге супстанце за употребу у перионицама; средства и агенси за прање и испирање веша и посуђа, судова, сервиса за ручавање, есцајга; омекшивачи за употребу у перионицама; средства за уклањање флека; штирак; сапуни; етерична уља као мирисни додаци при прању веша.

(111) **62678** (181) **07.12.2020.**
(210) Ж- 2010-2003 (220) 07.12.2010.
(151) 29.04.2011.
(300) 07.12.2010.
(732) **SANOFI PASTEUR, Societe Anonyme**; 2 Avenue Pont Pasteur, F-69007 Lyon, FR
(740) Дејан П. Богдановић и др., Влајковићева 28, 11000 Београд
(540)

IDflu

(531) 24.15.21; 26.01.01; 26.01.16; 26.15.01; 27.05.01; 27.05.07; 29.01.04
(591) плава и бела
(511) Кл. 5: фармацеутски препарати; вакцине.

(111) **62679** (181) **07.12.2020.**
(210) Ж- 2010-2004 (220) 07.12.2010.
(151) 29.04.2011.
(300) 07.12.2010.

(732) **CHURCH AND DWIGHT, CO., INC.**; 469 North Harrison Street , Princeton, New Jersey 08543, US
(740) Дејан П. Богдановић и др., Влајковићева 28, 11000 Београд
(540)

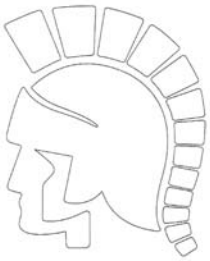

(531) 02.01.01; 02.01.02; 02.01.22
(511) Кл. 10: кондоми; апарати за масажу; рукавице за масажу; сексуална помагала за одрасле, а нарочито лични вибратори, вибрирајући прстенови, уређаји за стимулацију као помагала за сексуално узбуђење и сексуални чин; лични масажери на батерије.

---

(111) **62680** (181) **10.12.2020.**
(210) Ж- 2010-2036 (220) 10.12.2010.
(151) 29.04.2011.
(300) 10.12.2010.
(732) **KEIT Ltd.**; Mladost 3, bl. 380 parter, Sofia 1712, BG
(740) Живко Мијатовић & Партнерс д.о.о., 11000 Београд, Таковска 58
(540)

SecuryMark

(531) 26.04.02; 26.04.18; 27.05.01; 27.05.02; 27.05.09; 29.01.01; 29.01.12
(591) црвена и бела
(511) Кл. 35: оглашавање; вођење послова; пословно управљање; канцеларијски послови.
Кл. 40: обрађивање материјала.
Кл. 42: научне и технолошке услуге и истраживање и пројектовање у вези наведених услуга; услуге индустријске анализе и истраживања; пројектовање и развој компјутерског хардвера и софтвера.

---

(111) **62681** (181) **10.12.2020.**
(210) Ж- 2010-2040 (220) 10.12.2010.
(151) 29.04.2011.
(300) 10.12.2010.
(732) **KENZAI GROUP DRUŠTVO SA OGRANIČENOM ODGOVORNOŠĆU BEOGRAD-ZEMUN**; Auto-put za Novi Sad 74, Zemun, RS
(740) Драган Миловановић, Кнез Милоша 51, Београд
(540)

CARPETLAND
EXCLUSIVE

(531) 09.01.11; 26.04.02; 26.04.18; 27.05.01; 27.05.24; 29.01.12
(591) бордо
(511) Кл. 2: боје, средства за заштиту од труљења дрвета.
Кл. 20: намештај.
Кл. 24: текстил, текстилни производи.
Кл. 27: теписи, асуре, простирке и отирачи, линолеум и други материјали за покривање подова, прекривачи за зидове (нетекстилни).

---

(111) **62682** (181) **10.12.2020.**
(210) Ж- 2010-2041 (220) 10.12.2010.
(151) 29.04.2011.
(300) 10.12.2010.
(732) **KENZAI GROUP DRUŠTVO SA OGRANIČENOM ODGOVORNOŠĆU BEOGRAD-ZEMUN**; Auto-put za Novi Sad 74, Zemun, RS
(740) Драган Миловановић, Кнез Милоша 51, Београд
(540)

Carpetland
podne obloge

(531) 26.04.18; 27.05.01; 27.05.11; 29.01.12
(591) љубичаста, жута
(511) Кл. 2: боје, средства за заштиту од труљења дрвета.
Кл. 20: намештај.
Кл. 24: текстил, текстилни производи.
Кл. 27: теписи, асуре, простирке и отирачи, линолеум и други материјали за покривање подова, прекривачи за зидове (нетекстилни).

---

(111) **62683** (181) **13.10.2020.**
(210) Ж- 2010-1692 (220) 13.10.2010.
(151) 29.04.2011.
(300) 13.10.2010.
(732) **The North Face Apparel Corp.**; 3411 Silverside Road, Wilmington, Delaware 19810, US
(740) Ђосовић М. Драгољуб, адвокат, Војводе Драгомира 27, 11000 Београд
(540)

THE NORTH FACE

(511) Кл. 35: оглашавање; пословни менаџмент; услуге пословне администрације; услуге канцеларијског пословања, нарочито услуге тзв. "on line" продаје и малопродаје, путем Интернет веза, робе намењене личној употреби или потрошњи и то: кожа и имитација коже, производи израђени од ових материјала који нису укључени у друге класе; животињске коже, крзна; кофери и путне торбе; кишобрани, сунцобрани и штапови за ходање; бичеви, сарачка и седларска опрема, нарочито торбе које се носе на леђима, торбе ташне, ручне торбе, руксаци, торбе и кофери за дечји пртљаг, овалне торбе са ручкама, торбе од платна, коже или пластичних материјала са ручицама на извлачење, торбе и кофери са точкићима и ручицама за вучење, тврди кофери, торбе за смештај одела на вешалицама

као и остале торбе и кофери за смештај ствари за путовања које не припадају другим класама; намештај; огледала, оквири за слике; производи (који нису обухваћени другим класама) од дрвета, плуте, трске, рогоза, врбовог прућа, рога, кости; слоноваче, китове кости, шкољки; ћилибара, седефа, морске пене и замене свих ових материјала, или од пластике, нарочито вреће за спавање; ужад, канапи, мреже, шатори, надстрешнице од цираде, цираде, једра, вреће и торбе (који нису укључени у друге класе); материјал за пуњење мадраца (осим од вуне и пластике); сирове влакнасте текстилне материје, нарочито шатори; одећа, обућа и покривала за главу.

(111) **62684** (181) **13.12.2020.**
(210) Ж- 2010-2047 (220) 13.12.2010.
(151) 29.04.2011.
(300) 13.12.2010.
(732) **Društvo za proizvodnju konditorskih proizvoda, trgovina i usluga ŽITOPRERADA DM d.o.o.**; Bašaidski put bb, Novi Bečej, RS
(740) др Миленко Манигодић и Ђуро Манигодић, Кумановска 2-б, 11111 Београд
(540)

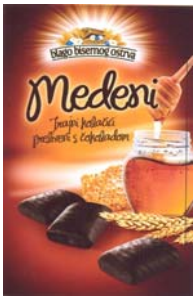


(531) 01.15.07; 01.15.09; 03.13.05; 05.05.20; 05.07.02; 08.01.11; 08.01.22; 10.03.16; 19.03.01; 25.01.01; 27.05.01; 29.01.15
(591) браон, тамно браон, тамно црвена, беж, жута, плава, сива, црна и бела
(511) Кл. 30: медени трајни колачићи преливени с чоколадом.

(111) **62685** (181) **16.07.2020.**
(210) Ж- 2010-1265 (220) 16.07.2010.
(151) 29.04.2011.
(300) 16.07.2010.Z-366345 16.02.2010. PL
(732) **FIRMA PRODUKCYJNO-USLUGOWO-HANDLOWA MOKATE - Teresa Mokrysz**; ul. Katowicka 265, 43-450 Ustron, PL
(740) Митровић Предраг, Аласка 36, 11080 Земун
(540)

(531) 26.01.02; 26.01.18; 27.05.01; 27.05.09; 27.05.10; 29.01.14
(591) црна, бела, златна, браон.
(511) Кл. 30: кафа.

(111) **62686** (181) **12.07.2020.**
(210) Ж- 2010-1220 (220) 12.07.2010.
(151) 29.04.2011.
(300) 12.07.2010.
(732) **RED BULL GmbH**; Am Brunnen 1, 5330 Fuschl am See , AT
(740) Павловић Гордана, адвокат, Павловић Миливоје, адвокат, 11000 Београд, Мајке Јевросиме 53
(540)

(531) 03.04.04; 03.04.23; 26.04.02; 26.04.15; 26.04.18; 27.05.01
(511) Кл. 1: хемијски производи за употребу у индустрији, науци и фотографији, као и пољопривреди, хортикултури и шумарству; непрерађене вештачке смоле; непрерађене пластичне масе; ђубрива; смесе за гашење пожара; хемијски производи за каљење, заваривање и лемљење; хемијски производи за конзервирање намирница; материје за штављење; лепљиве супстанце намењене индустрији; хемијски производи за импрегнирање коже и текстила; лепкови за тапете; хумус, компост, земља за сађење; хемијски производи за кондиционирање земљишта; хемијски адитиви за уља.
Кл. 2: боје, боје за спречавање стварања наслага (антифоулинг), фирнајзи, лакови; средства за везивање и разређивачи за боје, терпентин; средства за заштиту од рђе и труљења дрвета; материје за бојење; средства за нагризање; природне смоле; метали у листовима и праху за сликаре, декоратере, штампаре и уметнике.
Кл. 3: средства за бељење и друге супстанце за прање; средства за чишћење, полирање, рибање и нагризање; препарати за хемијско чишћење; сапуни; миришљави штапићи; парфимерија, етерична уља, козметички производи, лосиони за косу; препарати за негу зуба, спрејеви за освежавање даха; препарати за заштиту од сунца; штирак за прање; шмиргл-папир и шмиргл-траке.
Кл. 4: индустријска уља и масти; средства за подмазивање; смесе за упијање, влажење и везивање прашине; горива (укључујући моторна течна горива) и материје за осветљавање; ланолин; свеће и фитиљи за осветљавање.
Кл. 5: фармацеутски и ветеринарски производи, хигијенски препарати за употребу у медицини, укључујући препарате за јачање и снажење, нарочито витамински препарати и тоници и препарати и производи који садрже минерале и/или витамине и/или микроминерале за употребу у очувању

здравља; традиционални кинески лекови; медицинске инфузије, укључујући биљне чајеве; дијеталне супстанце за употребу у медицини, препарати за смањивање апетита за употребу у медицини; гуме за жвакање, гуме за жвакање са укусом воћа и слаткиши за употребу у медицини; храна за бебе; фластери, материјали за превијање; салвете за болеснике; хигијенски производи за жене, нарочито санитарни убруси, улошци, тампони, санитарне гаћице; хемијска контрацептивна средства; материје за пломбирање зуба и узимање отисака зуба; лепљиве супстанце за вештачке вилице, зубне смоле; дезинфекциона средства; препарати за отклањање непријатних мириса, осим за личну употребу, спрејеви за отклањање непријатних мириса у просторијама; препарати за уништавање штеточина; фунгициди, хербициди.

Кл. 6: обични метали и њихове легуре; метални грађевински материјали; ватростални грађевински материјали од метала; преносиве и непреносиве металне грађевине; метални материјали за железничке шине; неелектрични каблови и жице од обичних метала; браварска роба, ситна метална роба; металне цеви и тубе; касе (сефови); украсни и уметнички предмети од обичних метала; производи од метала (обухваћени класом 6), укључујући котве, наковње, славине за бурад, поклопце за флаше, контејнере (резервоаре), кутије за готовину, табле са ознакама, укључујући регистарске таблице за возила, табле, укључујући сигналне табле, несветлеће и немеханичке; транспортни контејнери; руде.

Кл. 7: машине, укључујући машине пунилице, дизалице и лифтови (осим ски-лифтова), екскаватори, грађевинске машине, булдожери, штампарске машине, електрични кухињски уређаји за сечење, дробљење, притискање, мешање, уређаји за лепљење етикета, уређаји за млевење, покретне траке, вентилатори (осим на ручно управљање), електрични генератори, струјни генератори и алтернатори, уређаји за дизање терета осим на ручно управљање, кранови, машине за мужу, машине за шивење, машине за папир, машине за полирање (осим за кућну употребу), пресе осим на ручно управљање, машине за исправљање, индустријски секачи, машине за заваривање, машине за текстил, машине за паковање, млинови са ваљцима, машине за прање судова, машине за прање веша, резачи (шредери); машински алати; мотори и погонски мотори (изузев за сувоземна возила); машинске спојнице и трансмисиони елементи (изузев за сувоземна возила); пригушивачи звука; пољопривредне справе и алати осим на ручно управљање; инкубатори за јаја; прскалице за наношење боје.

Кл. 8: ручни алат; опрема на ручно управљање за употребу у пољопривреди, вртарству и шумарству за конструисање машина, апарата и возила, и за структурално инжењерство; прибор за јело; хладно оружје; електрични и неелектрични жилети и бријачи; електрични и неелектрични резачи косе и машинице за косу; појасеви за алат.

Кл. 9: апарати и инструменти научни, поморски, геодетски, фотографски, кинематографски, оптички, за вагање, мерење, сигнализацију, контролу (инспекцију), помоћ (спасавање) и наставу; апарати и инструменти за провођење, прекидање, трансформисање, акумулирање, регулисање или контролу електричне енергије; апарати за снимање, пренос и репродуковање звука или слике; преносни радио-телефони (воки-токи); преносни телефони; апарати и машине за фотокопирање; носиоци података, укључујући видео траке, ЦД-РОМ дискови, ДВО дискови и други магнетни и/или оптички носиоци података, електронски уређаји за складиштење меморије; персонални стерео уређаји; аутоматске продајне машине и уређаји за апарате који се покрећу убацивањем металног новца или жетона; аутоматске машине за издавање (подизање) готовине (банкомати); апарати за издавање карата; аутоматске фотографске кабине; уређаји за играње игрица прилагођени за искључиву употребу са телевизијским пријемницима, видео игрице које се не покрећу убацивањем металног новца или жетона; уређаји за забаву прилагођени за искључиву употребу са телевизијским пријемницима; регистар-касе, машине за рачунање; опрема за обраду података и компјутери; машински читљиви носиоци података са инсталираним програмима; електронске публикације (које се могу преузимати он-лајн); компјутерски програми и софтвер; програми за компјутерске игрице; подлоге за компјутерске мишеве; апарати за навигацију за возила; заштитна одећа, укључујући заштитне наочари, заштитне маске, заштитне шлемове, нарочито за употребу у спорту; штитници, укључујући штитнике за уши, тело и лице; наочари, оквири за наочари, кутије и држачи за наочари, наочари за сунце, заштитне наочари за спорт; слушалице; апарати за дисање за рониоце, појасеви за пливање и котурови за руке за пливање; специјални контејнери (кутије, корице, кућишта) погодни за апарате и инструменте обухваћене овом класом; светлећи, маркирни, спасилачки и сигнални пловци; ветрокази; електричне батерије и акумулатори; магнети; светлећи знаци, светлеће рекламе; сигналне табле; бензинске пумпе за сервисне станице; апарати за гашење пожара; магнетске наруквице са идентификационим кодом.

Кл. 10: хируршки, медицински, стоматолошки и ветеринарски апарати и инструменти; хируршки импланти, укључујући вештачке удове, очи и зубе; ортопедска помагала; материјали за ушивање рана; презервативи; нехемијски производи за контрацепцију; вибратори, апарати за вибромасажу; цуцле за бебе.

Кл. 11: апарати за осветљавање, грејање, производњу паре, кување, хлађење, сушење, вентилацију, снабдевање водом и санитарне инсталације, укључујући лавабое, бидее, тоалете, инсталације за тоалете и купатила; фрижидери, фрижидери за пиће; апарати за климатизацију и вентилацију, укључујући такве апарате за возила; апарати за расвету у возилима,

укључујући светла за возила, рефлекторе за возила; електричне лампе, барске лампе; светла за рођење; гасогенератори (инсталације); колектори и акумулатори за соларну енергију.

Кл. 12: возила; апарати за кретање по земљи, ваздуху или води; камиони - хладњаче; ховеркрафти; падобрани; делови за возила; делови за апарате за кретање по земљи, ваздуху или води; делови за ховеркрафте; бицикли и делови за сва наведена возила (обухваћени класом 12), опрема за бицикле, нарочито пртљажници за бицикле, звонца за бицикле, штитници за одећу за бицикле, мотори за мотоцикле, пумпе за бицикле, браве за бицикле, прекривачи (навлаке) за седишта за бицикле, сталци за бицикле; прекривачи (навлаке) за седишта за мотоцикле; колица за голф и колица за бебе; опрема за аутомобиле, нарочито гуме, седишта и прекривачи за седишта, куке за приколице, кровни пртљажници, носачи за скије, блатобрани, ланци за снег, дефлектори за ветар, наслони за главу, сигурносни појасеви, сигурносна седишта за децу, сирене, волани, фелне, амортизери; навлаке за волане; мотори за сувоземна возила.

Кл. 13: ватрено оружје; муниција и пројектили; експлозивне материје; средства за ватромет; петарде; пушке, укључујући ловачке пушке, ваздушне пушке; делови за пушке, укључујући цеви и орозе; кофери и футроле за пушке; спрејеви за личну одбрану.

Кл. 14: драгоцени метали и њихове легуре; предмети израђени од драгоцених метала и њихових легура (обухваћени класом 14), укључујући занатске предмете, украсне предмете, привеске за кључеве; беџеви и значке од метала; накит, укључујући прстење од драгоцених метала, драго камење, бижутерија, дугмад за манжетне и игле за кравате; часовници и други хронометријски инструменти; ручни сатови и каишеви за сатове; кућишта за сатове; кутије и футроле за сву наведену робу.

Кл. 15: музички инструменти; механички клавири; музичке кутије; електрични и електронски музички инструменти; сталци за ноте, музички синтисајзери.

Кл. 16: хартија, картон и предмети израђени од тих материјала (обухваћени класом 16), укључујући папирне убрусе, сервијете, папирни филтери, папирне марамице, тоалет папир, папирне пелене, паковања од папира или картона; кутије и торбе за паковање; штампане ствари, укључујући информативне листиће, брошуре и фасцикле; књиговезачки материјал; фотографије; постери, транспарентне фолије, заставе (од папира); табле за означавање од папира или картона; мале табле са опругом за писање (клипборди); канцеларијски материјал; пресликачи, налепнице; етикете, укључујући нетекстилне етикете које се наносе пеглом; лепкови за канцеларијску или за кућну употребу; материјали за уметнике, укључујући материјале за цртање, сликање и моделирање; сликарске четкице; писаће машине и канцеларијски прибор (осим намештаја); материјал за наставу и обуку (осим апарата); пластични материјали за паковање (обухваћени класом 16); штампарска слова; штампарски клишеи; мале табле за писање и школске табле; прибор за писање и цртање; самолепљиви пластични филмови за декоративну употребу; штипаљке (држачи) за новац.

Кл. 17: гума, гутаперка, каучук, азбест, лискун и предмети израђени од ових материјала (обухваћени класом 17); полупрерађени производи од пластичних материја за употребу у производњи; материјали за подбијање (подлошке), заптивање и изоловање, савитљиве неметалне цеви; пластични филмови (осим за паковање); боје и лакови за изолацију; ватростални материјали за изолацију.

Кл. 18: кожа и имитација коже, производи од ових материјала (обухваћени класом 18), укључујући торбе и друге производе за ношење пртљага који нису прилагођени (обликом) за неке одређене предмете, као и ситне производе од коже, укључујући ручне ташне, џепне новчанике, улошке (футроле) за кључеве; ручне торбе, актен-ташне, кесе и торбе за куповину, школске торбе за преко рамена; ранчеви, руксаци; ремени који се носе преко рамена; животињске коже, крзна; кофери и путне торбе; путни прибор за од коже; кишобрани, сунцобрани и штапови за ходање; бичеви, сарачка и седларска опрема.

Кл. 19: грађевински материјали (неметални); неметалне круте цеви за грађевинарство; неметални ватростални грађевински материјали; асфалт, катран и битумен; преносиве и непреносиве грађевине (неметалне); споменици (неметални); украсни и уметнички предмети од камена, бетона или мермера; сигналне табле које су несветлеће, немеханичке и неметалне; капије (неметалне).

Кл. 20: намештај, огледала, рамови; намештај и столови од пластике или метала; унутрашње ролетне; производи (обухваћени класом 20) од дрвета, плуте, трске, рогоза, врбовог прућа, рога, кости, слоноваче, китове кости, шкољке, амбре, седефа, сепиолита, и замена свих ових материјала, или од пластичних материјала; уметнички и украсни предмети од дрвета, воска, гипса или пластике, неметалне плочице са именом, футроле за одела, вешалице, запушачи за флаше, држачи за качење кључева, пластични клинови, огласне табле и табле за означавање од дрвета или пластике; јарболи за заставе; пластични контејнери за паковање; неметални контејнери за течно гориво.

Кл. 21: прибор и посуђе за домаћинство или кухињу; судови и чаше за пиће; флаше и чутуре за пиће; кофе за лед, сандуци за хлађење, посуде за хлађење, калупи за лед; чешљеви и сунђери; четке (изузев кичица); материјали за четкарство; прибор за чишћење; мирисни спрејеви за освежавање ваздуха; челична вуна; необрађено или полуобрађено стакло (осим стакла за употребу у грађевинарству); стакларија, порцелан и фајанс (обухваћени класом 21); украсни и уметнички предмети од стакла,

порцелана и фајанса; табле за означавање од порцелана или стакла; козметички прибор; комплети лонаца за кување и кофе од лима, алуминијума, пластике или других материјала.
Кл. 22: ужад, канапи, мреже, шатори, тенде, цираде, једра; вреће (обухваћене класом 22).
Кл. 23: конац и пређа за текстилну употребу.
Кл. 24: текстил; текстилни производи (обухваћени класом 24), укључујући тканине, текстилне имитације коже, неткане текстилне материјале, завесе, текстилни производи за кућну употребу, столњаци и постељина; папирна постељина; завесе за туширање од текстила или пластике; заставе од текстила, заставе (изузев од папира); етикете, укључујући текстилне етикете које се наносе пеглом, текстилне налепнице, етикете које се пришивају; текстилне зидне тапете.
Кл. 26: чипке, и везови, пантљике и врпце; дугмад, закачке и окца, чиоде и игле; беџеви и значке са иглом и они који се стављају у рупице од дугмади; копче за каиш, штитници за панталоне за бициклисте, кићанке; галантерија; бројеви за такмичаре; вештачко цвеће.
Кл. 27: ћилими и теписи, застирачи, асуре, подметачи за употребу у баровима, отирачи, линолеум и други производи за прекривање подова; зидне тапете (изузев од текстила); струњаче; патоснице за аутомобиле; вештачка трава.
Кл. 29: месо, риба, живина и дивљач; екстракти од меса; воће и поврће конзервирано, сушено и кувано; желе, слатко, компоти; јаја, млеко и млечни производи; јестива уља и масти; конзервисано месо, риба, воће и поврће; мешавине млечних напитака (у којима преовлађује млеко); посластице од јогурта, сира и павлаке; сојино млеко (замена за млеко); ферментисана храна од поврћа (кимчи).
Кл. 30: кафа, чај, какао, шећер, пиринач, тапиока, саго, замена кафе; брашно и производи од житарица, хлеб, пецива, бисквити, колачи, посластице, кондиторски производи, сладолед; мед, сируп од меласе; квасац, прашак за пециво; со, јестива со, слачица; сирће, сосови (као зачини); преливи за салате; зачини; лед; напици од кафе, чаја, какаа и чоколаде; ледени чај; препарати од кафе и какаа за производњу алкохолних и безалкохолних пића; житарице за људску употребу, укључујући овсене пахуљице и пахуљице од других житарица; ароме за храну; слаткиши, бомбоне, гумени слаткиши са укусом воћа, чоколада, производи од чоколаде, пралине са пуњењем од ликера; чоколадне мешавине са садржајем алкохола; гуме за жвакање; штапићи од воћа и муслија.
Кл. 31: пољопривредни, вртларски и шумарски производи и зрневље (обухваћени класом 31); живе животиње; свеже воће и поврће; семе, живе и сушене биљке и природно цвеће; храна за животиње; пивски слад; коштуњаво воће; прекривач од сламе (и гнојива), тресет за легла.
Кл. 33: алкохолна пића (осим пива); топла алкохолна пића и мешана алкохолна пића, укључујући енергетска пића са алкохолом, кувано вино и мешана пића која садрже млеко; алкохолна пића од слада, ликери од слада; вина, жестока алкохолна пића и ликери; алкохолни препарати за припремање напитака; коктели и аперитиви на бази жестоких алкохолних пића или вина; напитци који садрже вино.
Кл. 34: дуван; производи од дувана, укључујући цигаре, цигарете, дуван за пушење, дуван за жвакање, бурмут; замене за дуван (осим за медицинске сврхе); прибор за пушаче, нарочито табакере, држачи за цигаре и цигарете, кутије и футроле за цигаре и цигарете; пепељаре, хумидори, сталци за луле, прибор за чишћење лула, секачи за цигаре, луле, дуван-кесе, упаљачи, џепни прибор за мотање цигарета, папир за цигарете, кутије за цигарете, филтери за цигарете; шибице.
Кл. 35: оглашавање, укључујући промоцију роба и услуга, као и промоцију такмичења, укључујући спортска такмичења; припремање оглашавања; дистрибуција робе у циљу оглашавања; услуге пројектовања у циљу оглашавања; онлајн оглашавање преко компјутерске мреже; изнајмљивање времена за оглашавање путем медија за комуникацију; услуге њуз клипинга; консултантске услуге у вези са организацијом; пословни менаџмент; пословна администрација; канцеларијски послови; организовање сајмова и изложби у комерцијалне сврхе и сврхе оглашавања; изнајмљивање продајних аутомата; прикупљање за трећа лица разне робе ради омогућавања потрошачима олакшаног разгледања и куповине те робе; прављење статистика; тражење спонзорства.
Кл. 36: осигурање; финансијски послови; монетарни послови; омогућавање пословања са банком од куће (home banking); послови у вези некретнина.
Кл. 37: оправљање или одржавање ваздухоплова и аутомобила; изградња; оправљање; инсталационе услуге; поправка, сервисирање, одржавање возила, снабдевање возила горивом; рестаурација музичких инструмената; инсталација врата и прозора; одржавање базена; пуњење кертрица са тонером.
Кл. 38: телекомуникације; пренос радио и телевизијских програма; услуге електронских огласних табли; обезбеђивање телекомуникационе везе са глобалном компјутерском мрежом, услуге телекомуникационог усмеравања (routing) и повезивања (junction), услуге телеконференција; обезбеђивање корисничког приступа глобалној компјутерској мрежи; обезбеђивање приступа базама података; услуге говорне поште.
Кл. 39: превоз људи и робе ваздушним путем, сувоземним путем, железницом и бродом; организовање путовања, обезбеђивање туристичких услуга, разгледање знаменитости, пратња путника; изнајмљивање ваздухоплова и возила; испорука пошиљки; паковање и складиштење робе; складиштење (физичко) електронски ускладиштених података и докумената; франкирање поште; пружање информација о саобраћају.

Кл. 40: обрада материјала.
Кл. 42: научне и технолошке услуге и истраживање и пројектовање у вези наведених услуга; услуге индустријске анализе и истраживања; пројектовање и развој компјутерског хардвера и софтвера; компјутерско програмирање; конверзија података из компјутерских програма и података (нефизичка конверзија); пројектовање компјутерских система; конверзија података или докумената из физичких у електронске медије; креирање и одржавање вебсајтова за друге, услуге хостинга компјутерских сајтова; инсталирање компјутерског софтвера; услуге индустријског дизајна; инжењеринг; консултантске услуге у области уштеде енергије; истраживање у области заштите животне околине.
Кл. 44: медицинске услуге; ветеринарске услуге; здравствена заштита и нега лепоте за људе или животиње; услуге тетовирања; пољопривредне, вртларске и шумарске услуге; услуге сауна; услуге соларијума; услуге здравствених спа центара; услуге шминкања; фармацеутске услуге у вези са производима који се издају на рецепт.
Кл. 45: личне и друштвене услуге у вези са потребама појединаца; услуге обезбеђења ради заштите имовине и лица; услуге упознавања; изнајмљивање одеће, изнајмљивање вечерњих хаљина; ватрогасне услуге; услуге сахрањивања, погребне услуге, услуге крематоријума; услуге детективских агенција, налажење несталих особа, отварање сигурносних брава; консултантске услуге у вези са обезбеђењем; услуге агенција за усвајање; услуге прављења хороскопа; организовање верских скупова; услуге брачних агенција, услуге пратње у јавности; давање лиценци за компјутерски софтвер (правне услуге); регистровање доменских имена (правне услуге); консултантске услуге у вези са интелектуалном својином, управљање ауторским правима, давање лиценци за интелектуалну својину; услуге надгледања (права интелектуалне својине; услуге правног истраживања, правне услуге; повраћај изгубљених ствари; посредовање; инспекција фабрика за потребе безбедности; изнајмљивање противпожарних аларма; изнајмљивање противпожарних апарата.

---

(111) **62687** (181) **13.10.2020.**
(210) Ж- 2010-1694 (220) 13.10.2010.
(151) 29.04.2011.
(300) 13.10.2010.
(732) **AD IMLEK**; Beograd, Padinska Skela, Industrijsko naselje bb, RS
(540)

(531) 24.13.22; 27.05.01; 27.05.03; 29.01.03; 29.01.12
(591) нијансе зелене, бела
(511) Кл. 29: млеко и млечни производи, а нарочито ферментисани производ од млека са пробиотским бактеријама.

---

(111) **62688** (181) **15.04.2021.**
(210) Ж- 2011-586 (220) 15.04.2011.
(151) 29.04.2011.
(300) 15.04.2011.
(732) **PREDUZEĆE ZA PROIZVODNJU, PROMET I USLUGE POLIMARK DOO BEOGRAD**; Autoput Beograd-Novi Sad 100b, 11080 Beograd-Zemun, RS
(740) Дејан П. Богдановић и др., Влајковићева 28, 11000 Београд
(540)

(531) 08.01.07; 08.05.03; 19.03.01; 24.09.03; 26.04.18; 27.05.01; 27.05.09; 27.05.11; 29.01.15
(591) црвена, жута, браон, плава, окер, бела, црна
(511) Кл. 30: сенф.

---

(111) **62689** (181) **23.09.2020.**
(210) Ж- 2010-1575 (220) 23.09.2010.
(151) 29.04.2011.
(300) 23.09.2010.
(732) **EKO SERBIA A.D. Beograd**; Tošin bunar 274a, 11070 Novi Beograd, RS
(540)

(531) 07.11.10; 26.01.01; 26.01.04; 26.01.16; 26.01.19; 26.15.01; 27.05.01; 27.05.03; 29.01.05; 29.01.13
(591) љубичаста (C79% M96% Y3% K0%); плава (C100% M35% Y12% K3%); бела
(511) Кл. 3: средства за бељење и друге супстанце за употребу у перионицама; препарати за чишћење, полирање, рибање и нагризање.
Кл. 35: оглашавање; вођење послова; пословно управљање; канцеларијски послови.
Кл. 37: грађевинско конструисање; поправљање; услуге инсталирања (инсталационе услуге).

(111) **62690** (181) **22.07.2020.**
(210) Ж- 2010-1298 (220) 22.07.2010.
(151) 29.04.2011.
(300) 22.07.2010.
(732) **E.I. du Pont de Nemours and Company**; 1007 Market Street, Wilmington, DE 19898, US
(740) Петошевић д.о.о., Веле Нигринове 16А, 11000 Београд
(540)

EXPRESSSUN

(511) Кл. 1: гени отпорни на хербициде за употребу у производњи пољопривредног семена.

---

(111) **62691** (181) **11.10.2020.**
(210) Ж- 2010-1679 (220) 11.10.2010.
(151) 29.04.2011.
(300) 11.10.2010.
(732) **GUARDUAN PROTECT Doo**; Užička br. 6, 11000 Beograd-Zemun, RS
(540)

(531) 09.07.01; 23.05.05; 27.01.12; 27.05.01; 27.05.10; 29.01.13
(591) црна, црвена, сива, бела
(511) Кл. 6: обични метали и њихове легуре, метални грађевински материјали, металне преносне грађевине, материјали од метала за железничке шине, не-електричне каблове и жице од обичног метала, браварски производи, мали метални гвожђарски производи, цевчице и цеви од метала, сефови, производи од обичних метала који нису укључени у друге класе, руде.

---

(111) **62692** (181) **28.12.2020.**
(210) Ж- 2010-2139 (220) 28.12.2010.
(151) 29.04.2011.
(300) 28.12.2010.
(732) **Marko Radinković PR, Ostale usluge informacione tehnologije CREATIVE GENOME**; Vojvođanska 63/2, Novi Beograd, RS
(740) Поповић Срђа, адвокат, 11000 Београд, Адвокатска канцеларија, Таковска 19
(540)

(531) 27.05.01; 27.05.10; 27.05.17; 27.05.19; 27.05.22; 29.01.04
(591) црна, плава
(511) Кл. 9: апарати за снимање, пренос и репродукцију звука или слике; магнетни носиоци података, дискови за снимање; рачунске машине, опрема за обраду података и компјутери; компјутерски програм; компјутерски софтвер.
Кл. 35: оглашавање; вођење послова; пословно управљање; канцеларијски послови.
Кл. 41: услуге компјутерске графике.
Кл. 42: научне и технолошке услуге и истраживање и пројектовање у вези наведених услуга; услуге индустријске анализе и истраживања; пројектовање и развој компјутерског хардвера и софтвера.

---

(111) **62693** (181) **01.12.2019.**
(210) Ж- 2009-1872 (220) 01.12.2009.
(151) 09.05.2011.
(300) 01.12.2009.
(732) **Kurt Geiger Limited**; 75 Bermondsey Street, London, SE1 3XF, UK
(740) СД ПЕТОШЕВИЋ и др. О.Д., 11000 Београд, Веле Нигринове 16А
(540)

KURT GEIGER

(531) 27.05.01
(511) Кл. 3: сапуни; парфимерија, есенцијална уља, козметика, средства за хигијену, производи за негу и бојење косе, лосиони за тело, лосиони за руке, лосиони за стопала; пасте за зубе; креме за обућу, сјај за обућу, восак за обућу.
Кл. 9: кредитне картице, дебитне картице, наградне картице и платне картице; некодиране магнетне картице; паметне (смарт) картице; кодиране банковне картице; електрични апарати и инструменти; апарати за снимање, пренос или репродукцију звука или слика, магнетни носиоци података, дискови за снимање; наснимљени ЦД-ови, ЦД-РОМ-ови, касете и дискови; наочаре за сунце, наочаре, кутије и оквири за наочаре и наочаре за сунце, контактна сочива и кутије за контактна сочива, заштитна обућа.
Кл. 14: накит; сатови и ручни сатови; дугмад за манжетне; копче; драго камење; племенити метал и њихове легуре и производи од племенитих метала или са превлаком од њих; часовничарски и хронометријски инструменти.
Кл. 18: кожа и имитација коже, и производи израђени од ових материјала; кофери, путне торбе и путни сетови, ручне торбе, ташне, новчаници, кутије за шешире, кишобрани, сунцобрани, штапови за ходање.
Кл. 25: одећа; обућа; покривала за главу.

Кл. 35: услуге малопродаје козметичких производа, производа за хигијену, парфимерије и есенцијалних уља, производа за негу и бојење косе, пасти за зубе, производа за негу обуће, накита, сатова и ручних сатова, наочара за сунце, наочара, контактних сочива и кутија и футрола за наочаре за сунце, наочаре и контактна сочива, производа од коже, ручних торби, ташни, и новчаника, кофера и путних торби, кишобрана, обуће и каишева; савети и помоћ у избору производа, услуге оглашавања и промоције; подстицање продаје и лојалности купаца; прикупљање у корист других разноврсних производа, омогућавајући потрошачима лако разгледање и куповину ових производа у амбијенту малопродајних објеката, путем поштанских наруџбеница или путем глобалних комуникацијских система.

(111) **62694** (181) **15.11.2020.**
(210) Ж- 2010-1867 (220) 15.11.2010.
(151) 09.05.2011.
(300) 15.11.2010.
(732) **KIT COMMERCE D.O.O.**; Trgovačka br. 7/2, 11000 Beograd, RS
(740) Момчило Кијановић, Стојана Аралице бр. 4/17, 11000 Београд
(540)

(531) 03.09.03; 03.09.04; 26.11.13; 27.05.01; 27.05.10; 27.05.17; 29.01.14
(591) плава, црна, црвена и бела
(511) Кл. 35: услуге продаје на мало и на велико: свих аутоделова за путничка и теретна моторна возила; свих уља, мазива и течности за моторна возила; свих пластичних делова за ентеријер и екстеријер моторних возила, свих врста ауто гума и фелни за моторна возила; свих врста сигурносних и светлосних сигнализација за моторна возила и свих резервних делова и обавезне опреме за моторна возила.

(111) **62695** (181) **06.12.2020.**
(210) Ж- 2010-1994 (220) 06.12.2010.
(151) 09.05.2011.
(300) 06.12.2010.
(732) **APATINSKA PIVARA APATIN DOO**; 25260 Apatin, Trg Oslobođenja 5, RS
(740) Адвокати др Миленко Манигодић и Ђуро Манигодић, 11111 Београд, Кумановска 2-б
(540)

(531) 05.13.08; 06.07.04; 25.01.06; 25.01.15; 27.01.12; 27.05.01; 27.05.03; 29.01.15
(591) црвена, зелена, окер, сива, црна и бела
(511) Кл. 32: пиво.

(111) **62696** (181) **07.12.2020.**
(210) Ж- 2010-2010 (220) 07.12.2010.
(151) 09.05.2011.
(300) 07.12.2010.
(732) **Colgate-Palmolive Company, a Delaware corporation**; 300 Park Avenue, New York, N.Y. 10022, US
(740) Др Слободан А. Поповић, Милена С. Бошњак и Андрија С. Поповић, адвокати и патентни заступници, 11000 Београд, Ресавска 34
(540)

(531) 25.01.01; 25.05.01; 25.05.06; 26.04.02; 26.04.18; 26.11.06; 26.11.12; 27.05.01; 27.05.10; 27.07.01; 29.01.15
(591) црвена, бела, тамноплава, светлоплава и зелена
(511) Кл. 3: паста за зубе.

(111) **62697** (181) **08.12.2020.**
(210) Ж- 2010-2021 (220) 08.12.2010.
(151) 09.05.2011.
(300) 08.12.2010.
(732) **DAIICHI SANKYO COMPANY, LIMITED, Established under Japanese Law**; 3-5-1, Nihonbashi Honcho, Chuo-ku, Tokyo 103-8426, JP
(740) Зоран Шубаревић и Александра Видић, адвокати, Церска 84, 11000 Београд
(540)

SELPATH

(511) Кл. 5: фармацеутски препарати и супстанце.

(111) **62698** (181) **30.12.2020.**
(210) Ж- 2010-2151 (220) 30.12.2010.
(151) 09.05.2011.
(300) 30.12.2010.
(732) **Novak Mršević**; Birčaninova 16b, 11000 Beograd, RS

(540)

(531) 27.05.01; 27.05.11; 27.05.17; 29.01.01; 29.01.03
(591) зелена и наранџаста
(511) Кл. 4: индустријска уља и масти; мазива; једињења за скупљање прашине влажењем и везивањем; горива (укључујући моторна течна горива) и материје за осветљавање; свеће и фитиљи за осветљавање.
Кл. 16: хартија, картон и производи од њих, који нису укључени у друге класе; штампане ствари; књиговезачки материјал; фотографије; канцеларијски материјал; лепила за канцеларијске и кућне потребе; уметнички материјали; кичице; писаће машине и канцеларијски реквизити (изузев намештаја); материјали за обуку и наставу (изузев апарата); пластични материјал за паковање (који није укључен у друге класе); штампарска слова; клишеи.
Кл. 35: оглашавање; вођење послова; пословно управљање; канцеларијски послови.

(111) **62699** (181) **31.12.2020.**
(210) Ж- 2010-2162 (220) 31.12.2010.
(151) 09.05.2011.
(300) 31.12.2010.
(732) **COLOR MEDIA INTERNATIONAL DOO**; Temerinska br. 102, 21000 Novi Sad, RS
(740) Адвокатска канцеларија Маровић, 21000 Нови Сад, Булевар ослобођења бр. 82/III
(540)

(531) 24.17.25; 27.05.01; 27.05.10
(511) Кл. 16: часописи и магазини.
Кл. 35: оглашавање.
Кл. 41: издавање часописа, магазина, штампаних ствари.

(111) **62700** (181) **16.04.2020.**
(210) Ж- 2010-636 (220) 16.04.2010.
(151) 09.05.2011.
(300) 16.04.2010.
(732) **Ilić Dušan**; Blagoja Parovića 14/40, 37000 Kruševac, RS
(540)

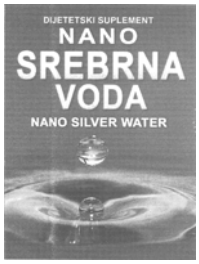


(531) 01.15.14; 01.15.15; 01.15.23; 25.01.01; 27.05.01; 27.05.10; 27.05.24
(526) "нано" и "сребрна вода"
(511) Кл. 5: дијететски препарат.

(111) **62701** (181) **28.09.2019.**
(210) Ж- 2009-1476 (220) 28.09.2009.
(151) 10.05.2011.
(300) 28.09.2009.
(732) **Wm. WRIGLEY Jr. Company**; 410 North Michigan Avenue, Chicago, IL 60611, US
(740) СД ПЕТОШЕВИЋ и др. О.Д., 11000 Београд, Веле Нигринове 16А
(540)

WRIGLEY'S 5

(511) Кл. 30: посластице, жвакаће гуме, жвакаће гуме од којих могу да се праве велики балони, бомбоне, дражеје пеперминта, ситне, спороотапајуће бомбоне и пастиле.

(111) **62702** (181) **28.09.2019.**
(210) Ж- 2009-1477 (220) 28.09.2009.
(151) 10.05.2011.
(300) 28.09.2009.
(732) **Wm. WRIGLEY Jr. Company**; 410 North Michigan Avenue, Chicago, IL 60611, US
(740) СД ПЕТОШЕВИЋ и др. О.Д., 11000 Београд, Веле Нигринове 16А
(540)

A TINGLING PEARMINT

(511) Кл. 30: посластице, жвакаће гуме, жвакаће гуме од којих могу да се праве велики балони, бомбоне, дражеје пеперминта, ситне, спороотапајуће бомбоне и пастиле.

(111) **62703** (181) **26.04.2021.**
(210) Ж- 2011-621 (220) 26.04.2011.
(151) 10.05.2011.
(300) 26.04.2011.
(732) **Galenika a.d.**; Batajnički drum bb, Beograd, 11080 Zemun, RS
(540)

LEFLOGAL ЛЕФЛОГАЛ

(511) Кл. 5: фармацеутски препарати.

(111) **62704** (181) **28.10.2020.**
(210) Ж- 2010-1763 (220) 28.10.2010.
(151) 10.05.2011.
(300) 28.10.2010.
(732) **Motorola Trademark Holdings, LLC, Delaware limited liability company**; 600 North US Highway 45, Libertyville, IL 60048, US

(740) ПЕТОШЕВИЋ д.о.о., Веле Нигринове 16А, 11000 Београд
(540)

MOTOROLA XOOM

(511) Кл. 9: преносиви компјутери и одговарајућа опрема, наиме, постоља са напајањем, кућишта, носачи, држачи, постоља, кутије за пренос, прекривачи, заштитне или украсне футроле, батерије, струјни адаптери, конектори за каблове, слушалице и звучници.

---

(111) **62705** (181) **15.11.2020.**
(210) Ж- 2010-1864 (220) 15.11.2010.
(151) 10.05.2011.
(300) 15.11.2010.
(732) **CARLSBERG SRBIJA DOO**; 21413 Čelarevo, Proleterska 17, RS
(740) Дејан Укропина, Поштански фах 59, 21120 Нови Сад
(540)

VITAKVAS

(511) Кл. 32: безалкохолна пића, наиме квас.

---

(111) **62706** (181) **09.12.2020.**
(210) Ж- 2010-2027 (220) 09.12.2010.
(151) 10.05.2011.
(300) 09.12.2010.
(732) **V MARK DOO za proizvodnju, export-import i usluge**; Novi Sad, Kozačinskog 7, RS
(740) Ковачевић Срђан, Јована Ђорђевића 11, 21000 Нови Сад, П. фах. 393
(540)

(531) 05.01.05; 27.03.11; 27.05.01; 27.05.10
(511) Кл. 35: оглашавање, вођење послова; пословно управљање; канцеларијски послови.
Кл. 43: услуге обезбеђивања хране и пића; привремени смештај.
Кл. 45: правне услуге; услуге обезбеђења ради заштите имовине и лица; индивидуалне и друштвене услуге које пружају други, ради задовољавања потреба појединаца.

---

(111) **62707** (181) **13.12.2020.**
(210) Ж- 2010-2046 (220) 13.12.2010.
(151) 10.05.2011.
(300) 13.12.2010.
(732) **RECI DA DOO**; Mlavska 10, 11000 Beograd, RS
(540)

(531) 27.05.01; 27.05.02; 27.05.09; 27.05.12; 27.05.13; 29.01.13
(591) црна, бела, розе
(511) Кл. 35: оглашавање, вођење послова, пословно управљање, канцеларијски послови.
Кл. 41: образовне услуге, припремање обуке, разонода, спортске и културне активности.

---

(111) **62708** (181) **27.12.2020.**
(210) Ж- 2010-2137 (220) 27.12.2010.
(151) 11.05.2011.
(300) 27.12.2010.
(732) **"STEELSOFT" D.O.O.**; Auto put za Novi Sad 71, 11080 Zemun, RS
(540)

(531) 26.01.02; 26.01.18; 27.05.01; 29.01.12
(591) сива и плава
(511) Кл. 11: електрични апарати за грејање и хлађење.

---

(111) **62709** (181) **30.12.2020.**
(210) Ж- 2010-2156 (220) 30.12.2010.
(151) 11.05.2011.
(300) 30.12.2010.
(732) **ENERGOTEAM d.o.o.**; Bul. Svetog cara Konstantina 80-86, 18000 Niš, RS
(740) Ана Мамић, Београд, Господар Јевремова 41
(540)

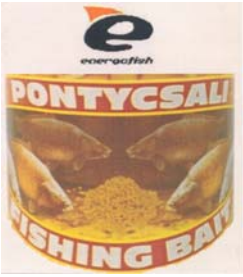


(531) 03.09.01; 03.09.12; 03.09.22; 25.01.01; 25.01.19; 27.05.01; 27.05.17; 27.05.21; 29.01.15
(591) црвена, жута, браон, драп, наранџаста
(511) Кл. 31: храна за рибе и живи мамци за риболов; рибље примаме.

---

(111) **62710** (181) **13.04.2021.**
(210) Ж- 2011-576 (220) 13.04.2011.
(151) 11.05.2011.
(300) 13.04.2011.

(732) **DUOCHEM d.o.o.**; Ruzveltova 38, 11050 Beograd, RS
(540)

BETA-TEAM

(511) Кл. 5: препарати за заштиту биља-хербициди и фунгициди.

(111) **62711** (181) **20.04.2021.**
(210) Ж- 2011-608 (220) 20.04.2011.
(151) 12.05.2011.
(300) 20.04.2011.
(732) **AGROMARKET doo**; Kraljevačkog bataljona 235/2, 34000 Kragujevac, RS
(540)

NIKOMARK

(511) Кл. 5: препарат за уништавање штеточина-фунгицид, хербицид, инсектицид.

(111) **62712** (181) **24.12.2020.**
(210) Ж- 2010-2132 (220) 24.12.2010.
(151) 12.05.2011.
(300) 24.12.2010.
(732) **Udruženje nastavnika srednjih škola "Dositej"**; Đure Gajića 110, Kula, RS
(740) Јована Томић, Маршала Бирјузова 1, 11000 Београд
(540)

(531) 02.07.23; 27.05.01; 27.05.07; 29.01.15
(591) наранџаста, црвена, плава, зелена, сива
(511) Кл. 38: телекомуникације.
Кл. 41: образовне услуге; припремање обуке; разонода; спортске и културне активности.
Кл. 42: научне и технолошке услуге и истраживање и пројектовање у вези наведених услуга; услуге индустријске анализе и истраживања; пројектовање и развој компјутерског хардвера и софтвера.
Кл. 45: правне услуге; услуге обезбеђења ради заштите имовине и лица; индивидуалне и друштвене услуге које пружају други, ради задовољавања потреба појединаца.

(111) **62713** (181) **22.12.2020.**
(210) Ж- 2010-2113 (220) 22.12.2010.
(151) 12.05.2011.
(300) 22.12.2010.
(732) **Tomislav Kukanjac**; Vojvode Bogdana br. 24/17, 11000 Beograd, RS
(740) Јасмина Д. Ђокић, адвокат, Београд, Кедрова 1/5
(540)

(531) 03.07.07; 21.03.01; 21.03.16; 26.01.01; 26.01.04; 26.01.16; 29.01.13
(591) плава, црвена, бела
(511) Кл. 41: образовне услуге, припремање обуке, разонода, спортске и културне активности.

(111) **62714** (181) **21.04.2021.**
(210) Ж- 2011-612 (220) 21.04.2011.
(151) 16.05.2011.
(300) 21.04.2011.
(732) **PharmaSwiss d.o.o.**; Vojvode Stepe 18, 11000 Beograd, RS
(540)

MOFETAN

(511) Кл. 5: лекови.

(111) **62715** (181) **27.04.2021.**
(210) Ж- 2011-629 (220) 27.04.2011.
(151) 16.05.2011.
(300) 27.04.2011.
(732) **PREDUZEĆE ZA PROIZVODNJU, PROMET I USLUGE POLIMARK DOO BEOGRAD**; Autoput Beograd-Novi Sad 100b, 11080 Beograd-Zemun, RS
(740) Богдановић Дејан, адвокат, 11000 Београд, Влајковићева 28
(540)

(531) 08.01.07; 08.05.03; 19.03.01; 24.09.03; 26.04.18; 27.05.01; 27.05.09; 27.05.11; 29.01.15
(591) зелена, жута, браон, плава, окер, бела, црна
(511) Кл. 30: сенф.

(111) **62716** (181) **10.11.2020.**
(210) Ж- 2010-1840 (220) 10.11.2010.
(151) 16.05.2011.
(300) 10.11.2010.

(732) **"VODA VRNJCI" a.d.**; Kneza Miloša 162, 36210 Vrnjačka Banja, RS
(740) Дејан П. Богдановић и др., Влајковићева 28, 11000 Београд
(540)

(531) 27.05.01; 27.05.10; 27.05.21
(511) Кл. 29: месо, риба, живина и дивљач; месне прерађевине; конзервисано, замрзнуто, сушено и кувано воће и поврће; желеи, џемови, компоти; јаја, млеко и млечни производи; јестива уља и масти.
Кл. 30: кафа, чај, какао, шећер, пиринач, тапиока, саго, замена кафе; брашно и производи од житарица, хлеб, пецива и посластичарски производи, сладоледи; мед, меласа; квасац, прашак за пециво; со, сенф; сирће, сосови (као зачини); зачини; лед.
Кл. 32: пиво; минералне и содне воде и друга безалкохолна пића; пића од воћа и воћни сокови; сирупи и други препарати за производњу пића.

---

(111) **62717** (181) **23.08.2020.**
(210) Ж- 2010-1449 (220) 23.08.2010.
(151) 17.05.2011.
(300) 23.08.2010.
(732) **ARCOR S.A.I.C.**; Avda. Fulvio Pagani 487, Arroyito, Province of Cordoba, AR
(740) Живко Мијатовић & Партнерс д.о.о., Таковска 58, 11000 Београд
(540)

(531) 02.09.01; 26.01.01; 26.01.05; 26.01.14; 26.01.18; 27.05.01; 27.05.24
(511) Кл. 30: кафа, чај, какао, шећер, пиринач, тапиока, саго, замена кафе; брашно и производи од житарица, хлеб, колачи, посластице, сладоледи; мед, меласа, квасац, прашак за пециво; со, сенф; сирће, сосови (као зачини); зачини; лед.

---

(111) **62718** (181) **08.09.2020.**
(210) Ж- 2010-1518 (220) 08.09.2010.
(151) 17.05.2011.
(300) 08.09.2010.
(732) **BEST WESTERN INTERNATIONAL, INC.**; 6201 N. 24th Parkway, Phoenix, Arizona 85016-2023, US
(740) Дејан П. Богдановић и др., Влајковићева 28, 11000 Београд
(540)

(531) 24.09.03; 26.05.01; 26.05.16; 26.05.18; 27.05.01; 27.05.24
(511) Кл. 43: хотелске услуге.

---

(111) **62719** (181) **08.09.2020.**
(210) Ж- 2010-1516 (220) 08.09.2010.
(151) 17.05.2011.
(300) 08.09.2010.
(732) **BEST WESTERN INTERNATIONAL, INC.**; 6201 N. 24th Parkway, Phoenix, Arizona 85016-2023, US
(740) Дејан П. Богдановић и др., Влајковићева 28, 11000 Београд
(540)

BEST WESTERN REWARDS

(511) Кл. 35: услуге награђивања лојалности потрошача (loyalty programi) и услуге клубова за потрошаче са комерцијалном, промотивном и/или рекламном наменом.

---

(111) **62720** (181) **15.10.2020.**
(210) Ж- 2010-1706 (220) 15.10.2010.
(151) 17.05.2011.
(300) 15.10.2010.
(732) **The North Face Apparel Corp.**; 3411 Silverside Road, Wilmington, Delaware 19810, US
(740) Ђосовић М. Драгољуб, адвокат, Војводе Драгомира 27, 11000 Београд
(540)

(531) 09.05.01; 26.01.01; 26.01.12; 26.02.05; 26.07.03; 27.05.01; 27.05.07

(511) Кл. 18: кожа и имитација коже, производи израђени од ових материјала који нису укључени у друге класе; животињске коже, крзна; кофери и путне торбе; кишобрани, сунцобрани и штапови за ходање; бичеви, сарачка и седларска опрема, нарочито торбе које се носе на леђима, торбе ташне, ручне торбе, руксаци, торбе и кофери за дечији пртљаг, овалне торбе са ручкама, торбе од платна, коже или пластичних материјала са ручицама на извлачење, торбе и кофери са точкићима и ручицама за вучење, тврди кофери, торбе за смештај одела на вешалицама као и остале торбе и кофери за смештај ствари за путовања, који не припадају другим класама.
Кл. 20: намештај; огледала, оквири за слике; производи (који нису обухваћени другим класама) од дрвета, плуте, трске, рогоза, врбовог прућа, рога, кости; слоноваче, китове кости, шкољки; ћилибара, седефа, морске пене и замене свих ових материјала, или од пластике, нарочито вреће за спавање.
Кл. 22: ужад, канапи, мреже, шатори, надстрешнице од цираде, цираде, једра, вреће и торбе (који нису укључени у друге класе); материјал за пуњење мадраца (осим од вуне и пластике); сирове влакнасте текстилне материје, нарочито шатори.
Кл. 25: одећа, обућа и покривала за главу.

(111) **62721** (181) **15.10.2020.**
(210) Ж- 2010-1704 (220) 15.10.2010.
(151) 17.05.2011.
(300) 15.10.2010.
(732) **The North Face Apparel Corp.**; 3411 Silverside Road, Wilmington, Delaware 19810, US
(740) Ћосовић М. Драгољуб, адвокат, Војводе Драгомира 27, 11000 Београд
(540)

(531) 26.01.01; 26.02.05; 26.07.03
(511) Кл. 18: кожа и имитација коже, производи израђени од ових материјала који нису укључени у друге класе; животињске коже, крзна; кофери и путне торбе; кишобрани, сунцобрани и штапови за ходање; бичеви, сарачка и седларска опрема, нарочито торбе које се носе на леђима, торбе ташне, ручне торбе, руксаци, торбе и кофери за дечији пртљаг, овалне торбе са ручкама, торбе од платна, коже или пластичних материјала са ручицама на извлачење, торбе и кофери са точкићима и ручицама за вучење, тврди кофери, торбе за смештај одела на вешалицама као и остале торбе и кофери за смештај ствари за путовања, који не припадају другим класама.
Кл. 20: намештај; огледала, оквири за слике; производи (који нису обухваћени другим класама) од дрвета, плуте, трске, рогоза, врбовог прућа, рога, кости; слоноваче, китове кости, шкољки; ћилибара, седефа, морске пене и замене свих ових материјала, или од пластике, нарочито вреће за спавање.
Кл. 22: ужад, канапи, мреже, шатори, надстрешнице од цираде, цираде, једра, вреће и торбе (који нису укључени у друге класе); материјал за пуњење мадраца (осим од вуне и пластике); сирове влакнасте текстилне материје, нарочито шатори.
Кл. 25: одећа, обућа и покривала за главу.

(111) **62722** (181) **15.10.2020.**
(210) Ж- 2010-1702 (220) 15.10.2010.
(151) 17.05.2011.
(300) 15.10.2010.
(732) **The North Face Apparel Corp.**; 3411 Silverside Road, Wilmington, Delaware 19810, US
(740) Ћосовић М. Драгољуб, адвокат, Војводе Драгомира 27, 11000 Београд
(540)

SUMMIT SERIES

(511) Кл. 18: кожа и имитација коже, производи израђени од ових материјала који нису укључени у друге класе; животињске коже, крзна; кофери и путне торбе; кишобрани, сунцобрани и штапови за ходање; бичеви, сарачка и седларска опрема, нарочито торбе које се носе на леђима, торбе ташне, ручне торбе, руксаци, торбе и кофери за дечији пртљаг, овалне торбе са ручкама, торбе од платна, коже или пластичних материјала са ручицама на извлачење, торбе и кофери са точкићима и ручицама за вучење, тврди кофери, торбе за смештај одела на вешалицама као и остале торбе и кофери за смештај ствари за путовања, који не припадају другим класама.
Кл. 20: намештај; огледала, оквири за слике; производи (који нису обухваћени другим класама) од дрвета, плуте, трске, рогоза, врбовог прућа, рога, кости; слоноваче, китове кости, шкољки; ћилибара, седефа, морске пене и замене свих ових материјала, или од пластике, нарочито вреће за спавање.
Кл. 22: ужад, канапи, мреже, шатори, надстрешнице од цираде, цираде, једра, вреће и торбе (који нису укључени у друге класе); материјал за пуњење мадраца (осим од вуне и пластике); сирове влакнасте текстилне материје, нарочито шатори.
Кл. 25: одећа, обућа и покривала за главу.

(111) **62723** (181) **15.10.2020.**
(210) Ж- 2010-1707 (220) 15.10.2010.
(151) 17.05.2011.
(300) 15.10.2010.
(732) **The North Face Apparel Corp.**; 3411 Silverside Road, Wilmington, Delaware 19810, US

(740) Ћосовић М. Драгољуб, адвокат, Војводе Драгомира 27, 11000 Београд
(540)

(531) 26.01.01; 26.02.05; 26.07.03; 27.05.01; 27.05.07
(511) Кл. 18: кожа и имитација коже, производи израђени од ових материјала који нису укључени у друге класе; животињске коже, крзна; кофери и путне торбе; кишобрани, сунцобрани и штапови за ходање; бичеви, сарачка и седларска опрема, нарочито торбе које се носе на леђима, торбе ташне, ручне торбе, руксаци, торбе и кофери за дечији пртљаг, овалне торбе са ручкама, торбе од платна, коже или пластичних материјала са ручицама на извлачење, торбе и кофери са точкићима и ручицама за вучење, тврди кофери, торбе за смештај одела на вешалицама као и остале торбе и кофери за смештај ствари за путовања, који не припадају другим класама.
Кл. 20: намештај; огледала, оквири за слике; производи (који нису обухваћени другим класама) од дрвета, плуте, трске, рогоза, врбовог прућа, рога, кости; слоноваче, китове кости, шкољки; ћилибара, седефа, морске пене и замене свих ових материјала, или од пластике, нарочито вреће за спавање.
Кл. 22: ужад, канапи, мреже, шатори, надстрешнице од цираде, цираде, једра, вреће и торбе (који нису укључени у друге класе); материјал за пуњење мадраца (осим од вуне и пластике); сирове влакнасте текстилне материје, нарочито шатори.
Кл. 25: одећа, обућа и покривала за главу.

(111) **62724** (181) **15.10.2020.**
(210) Ж- 2010-1701 (220) 15.10.2010.
(151) 17.05.2011.
(300) 15.10.2010.
(732) **The North Face Apparel Corp.**; 3411 Silverside Road, Wilmington, Delaware 19810, US
(740) Ћосовић М. Драгољуб, адвокат, Војводе Драгомира 27, 11000 Београд
(540)

FLIGHT SERIES

(511) Кл. 18: кожа и имитација коже, производи израђени од ових материјала који нису укључени у друге класе; животињске коже, крзна; кофери и путне торбе; кишобрани, сунцобрани и штапови за ходање; бичеви, сарачка и седларска опрема, нарочито торбе које се носе на леђима, торбе ташне, ручне торбе, руксаци, торбе и кофери за дечији пртљаг, овалне торбе са ручкама, торбе од платна, коже или пластичних материјала са ручицама на извлачење, торбе и кофери са точкићима и ручицама за вучење, тврди кофери, торбе за смештај одела на вешалицама као и остале торбе и кофери за смештај ствари за путовања, који не припадају другим класама.
Кл. 20: намештај; огледала, оквири за слике; производи (који нису обухваћени другим класама) од дрвета, плуте, трске, рогоза, врбовог прућа, рога, кости; слоноваче, китове кости, шкољки; ћилибара, седефа, морске пене и замене свих ових материјала, или од пластике, нарочито вреће за спавање.
Кл. 22: ужад, канапи, мреже, шатори, надстрешнице од цираде, цираде, једра, вреће и торбе (који нису укључени у друге класе); материјал за пуњење мадраца (осим од вуне и пластике); сирове влакнасте текстилне материје, нарочито шатори.
Кл. 25: одећа, обућа и покривала за главу.

(111) **62725** (181) **02.07.2020.**
(210) Ж- 2010-1151 (220) 02.07.2010.
(151) 17.05.2011.
(300) 02.07.2010.
(732) **AD Mlekara Subotica**; 24000 Subotica, Tolminska 10, RS
(740) Драгољуб Ћосовић, 11000 Београд, Војводе Драгомира 27
(540)

(531) 25.01.18; 25.01.19; 26.01.18; 26.01.19; 26.01.21; 27.05.01; 27.05.10; 27.05.22; 29.01.12
(591) тамно плава, светло плава, бела
(526) kvalitet
(511) Кл. 16: хартија, картон и производи од њих, који нису укључени у друге класе; штампане ствари; књиговезачки материјал; фотографије; канцеларијски материјал; лепила за канцеларијске и кућне потребе; уметнички материјали; кичице; писаће машине и канцеларијски реквизити (изузев намештаја); материјали за обуку и наставу (изузев апарата); пластични материјал за паковање (који није укључен у друге класе); штампарска слова; клишеи; нарочито етикете и налепнице за производе и амбалажа за паковање производа, упутства за употребу и гарантни листови, штампани каталози и маркетиншки материјал.
Кл. 29: млеко и млечни производи.
Кл. 30: кафа, чај, какао, шећер, пиринач, тапиока, саго, замена кафе; брашно и производи од житарица, хлеб, колачи, посластице, сладоледи; мед, меласа, квасац, прашак за пециво; со, сенф; сирће, сосови (као зачини); зачини; лед.

(111) **62726** (181) **14.09.2020.**
(210) Ж- 2010-1537 (220) 14.09.2010.
(151) 17.05.2011.
(300) 14.09.2010.
(732) **PRIVREDNO DRUŠTVO ZA PROIZVODNJU I USLUGE "GRAND SLOT" D.O.O. KRUŠEVAC**; Čolak Antina br. 39, Kruševac, RS
(740) Шакан Маринко, 11070 Нови Београд, Булевар Зорана Ђинђића бр. 100
(540)

(531) 17.02.01; 25.01.25; 26.05.16; 26.15.09; 27.05.01; 27.05.17
(591) две нијансе црвене, златна, бела и црна
(511) Кл. 9: аутоматске машине и механизми за апарате који се покрећу новцем или жетоном.
Кл. 41: разонода.
Кл. 42: пројектовање и развој компјутерског хардвера и софтвера у саставу аутомата за игре на срећу.

(111) **62727** (181) **30.06.2020.**
(210) Ж- 2010-1141 (220) 30.06.2010.
(151) 18.05.2011.
(300) 30.06.2010.
(732) **Narodna banka Srbije - Zavod za izradu novčanica i kovanog novca - Topčider**; Pionirska br. 2, 11000 Beograd, RS
(540)

ЗИН ШИФТ

(511) Кл. 2: лакови и премази.
Кл. 9: апарати и инструменти за мерење, контролу и инспекцију.
Кл. 16: штампане ствари на папиру, ПВЦ и ПЦ.

(111) **62728** (181) **13.12.2020.**
(210) Ж- 2010-2043 (220) 13.12.2010.
(151) 18.05.2011.
(300) 13.12.2010.
(732) **IMMUNO SYSTEMS DOO**; Bulevar Arsenija Čarnojevića 99, 11000 Beograd, RS
(740) Богдановић Душан, Делиградска 14, 11000 Београд
(540)

Prirodni imuno stimulator
immunitea

(531) 05.03.02; 05.03.14; 26.04.15; 27.05.01; 27.05.10
(511) Кл. 5: дијететске супстанце прилагођене за употребу у медицини, дијететски препарати, храна за бебе; фармацеутски и ветеринарски препарати; санитарни препарати за медицинску употребу; фластери, материјали за завијање; материјали за пломбирање зуба, зубарска смола; дезинфекциона средства; препарати за уништавање штеточина; фунгициди, хербициди.
Кл. 29: месо, риба, живина и дивљач; месне и рибље прерађевине; конзервисано, замрзнуто, сушено и кувано воће и поврће; желеи, џемови, компоти; јаја, млеко и млечни производи; јестива уља и масти.
Кл. 31: пољопривредни, вртларски и шумарски производи и зрневље који нису укључени у друге класе; живе животиње; свеже воће и поврће; семе, природне биљке и цвеће; храна за животиње, слад.

(111) **62729** (181) **13.12.2020.**
(210) Ж- 2010-2044 (220) 13.12.2010.
(151) 18.05.2011.
(300) 13.12.2010.
(732) **Milan Timotić**; Kneza Miloša broj 9, Valjevo, RS
(740) Иконовић Живорад, Маријане Грегоран 69, 11000 Београд
(540)

(531) 02.09.04; 27.05.01; 27.05.07; 27.05.13
(511) Кл. 29: месо, риба, живина и дивљач; месне прерађевине; конзервисано, замрзнуто, сушено и кувано воће и поврће; желеи, џемови и компоти; јаја, млеко и млечни производи; јестива уља и масти.

(111) **62730** (181) **13.12.2020.**
(210) Ж- 2010-2045 (220) 13.12.2010.
(151) 18.05.2011.
(300) 13.12.2010.
(732) **Milan Timotić**; Kneza Miloša broj 9, Valjevo, RS
(740) Иконовић Живорад, Маријане Грегоран 69, 11000 Београд
(540)

DISTRIBUTER DOBRIH UKUSA

(511) Кл. 29: месо, риба, живина и дивљач; месне прерађевине; конзервисано, замрзнуто, сушено и кувано воће и поврће; желеи, џемови и компоти; јаја, млеко и млечни производи; јестива уља и масти.

(111) **62731** (181) **12.04.2021.**
(210) Ж- 2011-563 (220) 12.04.2011.
(151) 19.05.2011.
(300) 12.04.2011.
(732) **Galenika a.d.**; Batajnički drum bb, Beograd, 11080 Zemun, RS
(540)

LINDOMEM
ЛИНДОМЕМ

(511) Кл. 5: фармацеутски препарати.

(111) **62732** (181) **12.04.2021.**
(210) Ж- 2011-564 (220) 12.04.2011.
(151) 19.05.2011.
(300) 12.04.2011.
(732) **Galenika a.d.**; Batajnički drum bb, Beograd, 11080 Zemun, RS
(540)

KVINAP КВИНАП

(511) Кл. 5: фармацеутски препарати.

(111) **62733** (181) **12.04.2021.**
(210) Ж- 2011-562 (220) 12.04.2011.
(151) 19.05.2011.
(300) 12.04.2011.
(732) **Galenika a.d.**; Batajnički drum bb, Beograd, 11080 Zemun, RS
(540)

ELEPHOGAL
ЕЛЕФОГАЛ

(511) Кл. 5: фармацеутски препарати.

(111) **62734** (181) **12.04.2021.**
(210) Ж- 2011-566 (220) 12.04.2011.
(151) 19.05.2011.
(300) 12.04.2011.
(732) **Galenika a.d.**; Batajnički drum bb, Beograd, 11080 Zemun, RS
(540)

PARIZOL ПАРИЗОЛ

(511) Кл. 5: фармацеутски препарати.

(111) **62735** (181) **12.04.2021.**
(210) Ж- 2011-567 (220) 12.04.2011.
(151) 19.05.2011.
(300) 12.04.2011.
(732) **Galenika a.d.**; Batajnički drum bb, Beograd, 11080 Zemun, RS
(540)

TELUKA ТЕЛУКА

(511) Кл. 5: фармацеутски препарати.

(111) **62736** (181) **12.04.2021.**
(210) Ж- 2011-565 (220) 12.04.2011.
(151) 19.05.2011.
(300) 12.04.2011.
(732) **Galenika a.d.**; Batajnički drum bb, Beograd, 11080 Zemun, RS
(540)

KVINAP PLUS КВИНАП ПЛУС

(511) Кл. 5: фармацеутски препарати.

(111) **62737** (181) **01.12.2020.**
(210) Ж- 2010-1959 (220) 01.12.2010.
(151) 19.05.2011.
(300) 01.12.2010.
(732) **ADRIA MEDIA SERBIA D.O.O. BEOGRAD**; Omladinskih brigada 88A, 11070 Novi Beograd, RS
(740) Предраг Гроза, 11000 Београд, Царице Милице 3
(540)

Fokus

(531) 01.05.01; 01.05.02; 01.05.05; 27.03.01; 27.05.01; 27.05.17; 29.01.01; 29.01.12
(591) црвена, бела
(511) Кл. 16: хартија, картон и производи од њих, који нису укључени у друге класе; штампане ствари; књиговезачки материјал; фотографије; канцеларијски материјал; лепила за канцеларијске и кућне потребе; уметнички материјали; кичице; писаће машине и канцеларијски реквизити (изузев намештаја); материјали за обуку и наставу (изузев апарата); пластични материјал за паковање (који није укључен у друге класе); штампарска слова; клишеи.
Кл. 35: оглашавање; вођење послова; пословно управљање; канцеларијски послови.
Кл. 38: телекомуникације.
Кл. 41: образовне услуге; припремање обуке; разонода; спортске и културне активности.

(111) **62738** (181) **01.12.2020.**
(210) Ж- 2010-1958 (220) 01.12.2010.
(151) 19.05.2011.
(300) 01.12.2010.

(732) **ADRIA MEDIA SERBIA D.O.O. BEOGRAD**; Omladinskih brigada 88A, 11070 Novi Beograd, RS
(740) Предраг Гроза, 11000 Београд, Царице Милице 3
(540)

(531) 01.05.01; 01.05.02; 01.05.05; 26.04.01; 26.04.18; 27.03.01; 27.05.01; 27.05.17; 29.01.01; 29.01.12
(591) бела, црвена
(511) Кл. 16: хартија, картон и производи од њих, који нису укључени у друге класе; штампане ствари; књиговезачки материјал; фотографије; канцеларијски материјал; лепила за канцеларијске и кућне потребе; уметнички материјали; кичице; писаће машине и канцеларијски реквизити (изузев намештаја); материјали за обуку и наставу (изузев апарата); пластични материјал за паковање (који није укључен у друге класе); штампарска слова; клишеи.
Кл. 35: оглашавање; вођење послова; пословно управљање; канцеларијски послови.
Кл. 38: телекомуникације.
Кл. 41: образовне услуге; припремање обуке; разонода; спортске и културне активности.

(111) **62739** (181) **26.08.2020.**
(210) Ж- 2010-1466 (220) 26.08.2010.
(151) 19.05.2011.
(300) 26.08.2010.
(732) **Bonatti, d.o.o**; Bulevar Vojvode Mišića 41, 11 000 Beograd, RS
(740) Предраг Митровић, Аласка 36, 11080 Земун
(540)

GATTI

(511) Кл. 18: кожа и имитација коже, производи израђени од ових материјала који нису укључени у друге класе; животињска кожа, крзно; кофери и путне торбе; кишобрани, сунцобрани и штапови за ходање; бичеви, сарачка и седларска опрема.
Кл. 24: текстил и текстилни производи који нису обухваћени другим класама; прекривачи за кревете, душеке, јастуке и столове, јастуци.
Кл. 25: одећа, обућа, покривала за главу.

(111) **62740** (181) **11.08.2020.**
(210) Ж- 2010-1394 (220) 11.08.2010.
(151) 19.05.2011.
(300) 11.08.2010.
(732) **Thuraya Telecommunications Company**; Sheikh Rashid Bin Saeed Al Maktoum Street, Etisalat Tower, Abu-Dhabi, AE
(740) Ћосовић М. Драгољуб, адвокат, Војводе Драгомира 27, 11000 Београд
(540)

(531) 02.01.23; 26.01.14; 27.05.01; 29.01.13
(591) тамно плава, сива и бела
(511) Кл. 9: апарати и инструменти научни, поморски, геодетски и електрични, укључујући бежичне инструменте и апарате, телекомникацијски инструменти и апарати укључујући пријемнике и отпремнике, телефоне и бежичне телефоне, мобилне и целуларне телефоне и њихове делове, сателите земаљске станице за пријем и одашиљање, антене, тањирасте антене и све типове декодера.
Кл. 16: штампане ствари, новине и часописи, књиге и брошуре фотографије.
Кл. 38: услуге у области телекомуникација укључујући бежичну комуникацију, преко земаљских станица и телекомуникацију преко сателита.

(111) **62741** (181) **12.08.2020.**
(210) Ж- 2010-1399 (220) 12.08.2010.
(151) 19.05.2011.
(300) 12.08.2010.
(732) **SPECIJALISTIČKA ORDINACIJA IZ DERMATOLOGIJE DERMATIM SVETLANA ĐURIŠIĆ PREDUZETNIK**; Beograd, Kralja Petra 71a, RS
(740) Љубиша Живадиновић, Булевар Ослобођење 51, 11000 Београд
(540)

(531) 26.04.01; 26.04.16; 26.13.01; 26.13.25; 27.05.01; 29.01.13
(591) бела, црна, наранџаста
(511) Кл. 44: услуге дерматовенерологије.

(111) **62742** (181) **13.04.2020.**
(210) Ж- 2010-592 (220) 13.04.2010.
(151) 20.05.2011.
(300) 13.04.2010.
(732) **Preduzeće za telekomunikacije Digi Sat doo**; 11000 Beograd, Bulevar Franša Deperea 88, RS
(540)

(531) 27.05.01; 27.05.10; 27.05.17; 29.01.04
(591) плава

(511) Кл. 9: мобилни телефон, СИМ картица, модем за мобилни интернет.
Кл. 37: конструисање и изградња мобилне телекомуникационе мреже.
Кл. 38: услуге мобилне телефоније, услуге мобилног интернета, услуге преноса података преко мобилне телекомуникационе мреже, мултимедијалне услуге преко мобилне телекомуникационе мреже.

(111) **62743** (181) **13.04.2020.**
(210) Ж- 2010-593 (220) 13.04.2010.
(151) 20.05.2011.
(300) 13.04.2010.
(732) **Preduzeće za telekomunikacije Digi Sat doo**; 11000 Beograd, Bulevar Franša Deperea 88, RS
(540)

(531) 27.05.01; 27.05.10; 27.05.17; 29.01.04
(591) плава
(511) Кл. 9: IPTV декодер, IPTV рекордер, ауторизована картица приступа.
Кл. 37: конструисање и изградња телекомуникационе мреже, инсталација пријемних корисничких уређаја ради пружања услуга дистрибуције радио и телевизијских програма преко интернет протокола.
Кл. 38: услуге дистрибуције радио и телевизијских програма преко интернет протокола, услуге интернета, услуге преноса говора путем интернета, услуге преноса података, мултимедијалне услуге путем интернет протокола.

(111) **62744** (181) **13.04.2020.**
(210) Ж- 2010-595 (220) 13.04.2010.
(151) 20.05.2011.
(300) 13.04.2010.
(732) **Preduzeće za telekomunikacije Digi Sat doo** ; 11000 Beograd, Bulevar Franša Deperea 88, RS
(540)

(531) 27.05.01; 27.05.10; 27.05.17; 29.01.04
(591) плава
(511) Кл. 9: кабловски декодер, ауторизована картица приступа, модем за кабловски интернет.
Кл. 37: конструисање и изградња кабловске дистрибутивне мреже, инсталација пријемних корисничких уређаја ради пружања услуга преко кабловске дистрибутивне мреже.
Кл. 38: услуге кабловске телевизије, услуге кабловског интернета, услуге преноса говора путем интернета, услуге преноса података, мултимедијалне услуге путем кабловске дистрибутивне мреже.

(111) **62745** (181) **13.04.2020.**
(210) Ж- 2010-591 (220) 13.04.2010.
(151) 20.05.2011.
(300) 13.04.2010.
(732) **Preduzeće za telekomunikacije Digi Sat doo**; 11000 Beograd, Bulevar Franša Deperea 88, RS
(540)

(531) 27.05.01; 27.05.10; 27.05.17; 29.01.04
(591) плава
(511) Кл. 9: итернет модем, пријемни интернет уређаји.
Кл. 37: конструисање и изградња телекомуникационе мреже, инсталација пријемних корисничких уређаја ради пружања услуга интернета.
Кл. 38: услуге интернета, услуге преноса говора путем интернета, услуге преноса података, услуге размене података, мултимедијалне услуге путем интернета, услуге виртуалне приватне мреже, услуге интернет берзе.

(111) **62746** (181) **21.10.2020.**
(210) Ж- 2010-1732 (220) 21.10.2010.
(151) 20.05.2011.
(300) 21.10.2010.
(732) **WESTIN HOTEL MANAGEMENT, L.P.**; 1111 Westchester Avenue, White Plains, N.Y. 10604, US
(740) Јанковић др Иван, адвокат, 11000 Београд, Влајковићева 28
(540)

WESTIN

(511) Кл. 43: услуге обезбеђивања хране и пића; привремени смештај.

(111) **62747** (181) **14.04.2020.**
(210) Ж- 2010-613 (220) 14.04.2010.
(151) 20.05.2011.
(300) 14.04.2010.
(732) **Intervet International B.V.**; Wim de Körverstraat 35, 5831 AN Boxmeer, NL
(740) Милош М. Митић, Чарли Чаплина 37, 11000 Београд
(540)

RABDOMUN

(511) Кл. 5: лекови и фармацеутски препарати за ветеринарску употребу.

(111) **62748** (181) **14.04.2020.**
(210) Ж- 2010-604 (220) 14.04.2010.
(151) 20.05.2011.
(300) 14.04.2010.
(732) **WOLVERINE INTERNATIONAL, L.P.**; 4th Floor, Scotia Centre, P.O. Box 268, Grand Cayman KY1-11404, KY
(740) Срђа Поповић, Гордана Поповић, Борис Поповић, Лидија Томасовић, Катарина Костић, Таковска 19, Београд
(540)

SHUCOON

(511) Кл. 25: одећа, обућа, покривала за главу.

(111) **62749** (181) **06.08.2020.**
(210) Ж- 2010-1370 (220) 06.08.2010.
(151) 20.05.2011.
(300) 06.08.2010.
(732) **Georgia-Pacific Consumer Products LP**; 133 Peachtree Street NE, Atlanta, Georgia 30303, US
(740) Петошевић д.о.о., Веле Нигринове 16А, 11000 Београд
(540)

COMPACT

(511) Кл. 16: тоалет папир.
Кл. 21: држачи за тоалет папир.

(111) **62750** (181) **05.10.2020.**
(210) Ж- 2010-1648 (220) 05.10.2010.
(151) 20.05.2011.
(300) 05.10.2010.
(732) **Giga-Byte Technology Co. Ltd.**; No. 6, Bau Chiang Rd. Hsin-Tien, Taipei 231, TW
(740) Слободан Влаховић, адвокат, 11070 Нови Београд, Радоја Дакића 35/32
(540)

(531) 15.09.01; 15.09.18; 27.05.01; 27.07.01
(511) Кл. 9: матичне плоче; VGA картице.
Кл. 35: услуге увозно-извозних агенција; услуге промовисања продаје за друге.
Кл. 37: услуге инсталирања, одржавања и поправке компјутерске опреме (хардвер).

(111) **62751** (181) **29.11.2020.**
(210) Ж- 2010-1940 (220) 29.11.2010.
(151) 20.05.2011.
(300) 29.11.2010.
(732) **Udruženje lončara "Zlakusa"**; Selo Zlakusa bb, 31205 Sevojno, RS
(540)

(531) 26.01.18; 26.01.21; 27.05.01; 27.05.21; 28.05.00
(511) Кл. 21: грнчарски производи, лончарија.
Кл. 40: обрађивање глине, лончарски занат, грнчарски занат.
Кл. 41: образовне услуге, припремање обуке.

(111) **62752** (181) **22.07.2020.**
(210) Ж- 2010-1297 (220) 22.07.2010.
(151) 20.05.2011.
(300) 22.07.2010.
(732) **Café Reklám Reklámügynökségi és Filmszolgáltató Kft.**; Seregély utca 3-5, Budapest 1037, HU
(740) Живко Мијатовић & Партнерс д.о.о., 11000 Београд, Таковска 58
(540)

(531) 26.13.01; 27.05.01; 27.05.04; 27.05.06; 27.05.09; 27.05.10; 29.01.15
(591) све нијансе наранџасте, црвене, розе, љубичасте, плаве и зелене
(511) Кл. 16: хартија, картон и производи од њих, који нису укључени у друге класе; штампане ствари; књиговезачки материјал; фотографије; канцеларијски материјал; писаће машине и канцеларијски реквизити (изузев намештаја); материјали за обуку и наставу (изузев апарата); пластични материјал за паковање (који није укључен у друге класе); штампарска слова; клишеи.
Кл. 35: оглашавање; вођење послова; пословно управљање; канцеларијски послови.
Кл. 42: научне и технолошке услуге и истраживање и пројектовање у вези наведених услуга; услуге индустријске анализе и истраживања; пројектовање и развој компјутерског хардвера и софтвера: креирање и одржавање web сајтова за друге; дизајн амбалаже.

(111) **62753** (181) **29.11.2020.**
(210) Ж- 2010-1941 (220) 29.11.2010.
(151) 20.05.2011.
(300) 29.11.2010.
(732) **Univerexport export-import d.o.o. Novi Sad**; Sentandrejski put 165, 21000 Novi Sad, RS
(740) Милан Д. Павлица, 11000 Београд, Чарли Чаплина 15/16
(540)

(531) 26.04.01; 26.04.18; 27.05.01; 27.05.03; 27.05.17; 27.05.24; 29.01.12
(591) бела, сива
(511) Кл. 3: средства за бељење и друге супстанце за употребу у перионицама; препарати за чишћење, полирање, рибање и нагризање; сапуни; парфимерија, етерична уља, козметика, лосиони за косу; пасте за зубе.
Кл. 16: хартија, картон и производи од њих, који нису укључени у друге класе; штампане ствари; књиговезачки материјал; фотографије; канцеларијски материјал;
лепила за канцеларијске и кућне потребе; уметнички материјали; кичице; писаће машине и канцеларијски реквизити (изузев намештаја); материјали за обуку и наставу (изузев апарата); пластични материјал за паковање (који није укључен у друге класе); штампарска слова; клишеи.
Кл. 29: месо, риба, живина и дивљач; месне прерађевине;
конзервисано, замрзнуто, сушено и кувано воће и поврће; желеи, џемови, компоти; јаја, млеко и млечни производи; јестива уља и масти.
Кл. 30: кафа, чај, какао, шећер, пиринач, тапиока, саго, замена кафе; брашно и производи од житарица, хлеб, колачи и посластице, сладоледи; мед, меласа; квасац, прашак за пециво; со, сенф; сирће, сосови (као додаци); зачини; лед.
Кл. 31: пољопривредни, вртларски и шумарски производи и зрневље који нису укључени у друге класе; живе животиње; свеже воће и поврће; семе, природне биљке и цвеће; храна за животиње, слад.
Кл. 32: пиво; минералне и содне воде и друга безалкохолна пића; пића од воћа и воћни сокови; сирупи и други препарати за производњу пића.
Кл. 33: алкохолна пића (изузев пива).

(111) **62754** (181) **04.10.2020.**
(210) Ж- 2010-1643 (220) 04.10.2010.
(151) 20.05.2011.
(300) 04.10.2010.
(732) **PINAR SUT MAMULLERI SANAYI ANONIM SIRKETI**; Kemalpasa Asfalti, No: 1, Pinarbasi, Izmir, TR
(740) Зоран Д. Граовац, адвокат, 11160 Београд, Миријевски венац 4
(540)

(531) 26.04.01; 26.04.16; 26.04.18; 26.11.12; 27.05.01; 27.05.12; 27.05.17; 29.01.13
(591) зелена, плава и црвена
(511) Кл. 29: месо, риба, живина и дивљач; месне прерађевине; конзервисано, замрзнуто, сушено и кувано воће и поврће; желеи, џемови, компоти; јаја, млеко и млечни производи; јестива уља и масти.
Кл. 30: кафа, чај, какао, шећер, пиринач, тапиока, саго, замена кафе; брашно и производи од житарица, хлеб, колачи и посластице, сладоледи; мед, меласа; квасац, прашак за пециво; со, сенф; сирће, сосови (као додаци); зачини; лед.
Кл. 32: пиво; минералне и содне воде и друга безалкохолна пића; пића од воћа и воћни сокови; сирупи и други препарати за производњу пића.

(111) **62755** (181) **09.08.2020.**
(210) Ж- 2010-1373 (220) 09.08.2010.
(151) 20.05.2011.
(300) 09.08.2010.77/935,609 15.02.2010. US
(732) **International Truck Intellectual Property Company, LLC**; 4201 Winfield Road, Warrenville, IL 60555, US
(740) Петошевић д.о.о., Веле Нигринове 16А, 11000 Београд
(540)

DXM

(511) Кл. 12: системи за амортизацију моторних возила.

(111) **62756** (181) **06.08.2020.**
(210) Ж- 2010-1371 (220) 06.08.2010.
(151) 20.05.2011.
(300) 06.08.2010.
(732) **Georgia-Pacific Consumer Products LP**; 133 Peachtree Street NE, Atlanta, Georgia 30303, US
(740) Петошевић д.о.о., Веле Нигринове 16А, 11000 Београд
(540)

SERIE 3000

(511) Кл. 3: средства за чишћење дасака за WC шоље.

Кл. 5: освеживачи ваздуха.
Кл. 16: папирни убруси.
Кл. 21: канте за отпатке, држачи за папирне убрусе.

(111) **62757** (181) **10.08.2020.**
(210) Ж- 2010-1379 (220) 10.08.2010.
(151) 20.05.2011.
(300) 10.08.2010.008878779 12.02.2010. EM
(732) **Reckitt Benckiser (Switzerland) AG**; Richtistrasse 5, CH-8304, Wallisellen, Zurich, CH
(740) Живко Мијатовић & Партнерс д.о.о., 11000 Београд, Таковска 58
(540)

(531) 26.01.01; 26.01.05; 26.01.18; 27.05.01; 27.05.07; 29.01.15
(591) тамно зелена, светло зелена, бела и наранџаста.
(511) Кл. 3: парфимисани препарати за ваздух; потпури, етерична уља, парфимисани спрејеви за просторије; препарати за парфимисање или ароматизацију ваздуха.
Кл. 4: свеће; свеће са аромом или миришљаве свеће.
Кл. 5: препарати за освежавање ваздуха; препарати за прочишћавање ваздуха; освеживачи за просторије; дезодоранси који нису за личну употребу; препарати за неутрализовање непријатних мириса.
Кл. 11: апарати и инструменти, сви за парфимисање, прочишћавање или освежавање ваздуха; делови и опрема за све поменуте робе.

(111) **62758** (181) **05.10.2020.**
(210) Ж- 2010-1652 (220) 05.10.2010.
(151) 20.05.2011.
(300) 05.10.2010.
(732) **Giga-Byte Technology Co. Ltd.**; No. 6, Bau Chiang Rd. Hsin-Tien, Taipei 231, TW
(740) Слободан Влаховић, адвокат, 11070 Нови Београд, Радоја Дакића 35/32
(540)

(531) 15.01.11; 15.09.01; 15.09.18; 27.05.01; 27.07.01
(511) Кл. 9: матичне плоче.
Кл. 35: услуге увозно-извозних агенција; услуге промовисања продаје за друге.
Кл. 37: услуге инсталирања, одржавања и поправке компјутерске опреме (хардвер).

(111) **62759** (181) **12.04.2020.**
(210) Ж- 2010-582 (220) 12.04.2010.
(151) 20.05.2011.
(300) 12.04.2010.
(732) **Privredno društvo za proizvodnju farmaceutskih preparata LOTOS DOO**; Banatski Karlovac, dr Mijatovića 3, RS
(740) Др Миленко Манигодић, адвокат и Ђуро Манигодић, адвокат, Кумановска 2б, 11000 Београд
(540)

TERAMAX

(511) Кл. 11: апарати за осветљавање, грејање, производњу паре, кување, хлађење, сушење, вентилацију, снабдевање водом и за санитарне сврхе.
Кл. 17: гума, гутаперка, каучук, азбест, лискун и производи направљени од ових материјала који нису укључени у друге класе; полупрерађени пластични производи који се користе у производњи; материјали за подбијање (подлошке), заптивање и изоловање; савитљиве неметалне цеви.
Кл. 19: грађевински материјали (неметални); чврсте неметалне цеви за грађевине; асфалт, црна смола и битумен; неметалне преносне грађевине; споменици, који нису од метала.

(111) **62760** (181) **30.12.2020.**
(210) Ж- 2010-2158 (220) 30.12.2010.
(151) 20.05.2011.
(300) 30.12.2010.
(732) **FOREST LABORATORIES UK LIMITED**; Riverbridge House, Anchor Boulevard, Crossways Business Park, Dartford, Kent DA2 6SL, UK
(740) Срђа Поповић, Гордана Поповић, Борис Поповић, Лидија Томасовић, Катарина Костић, Таковска 19, Београд
(540)

INFACOL

(511) Кл. 5: фармацеутски препарати и супстанце.

(111) **62761** (181) **29.11.2020.**
(210) Ж- 2010-1937 (220) 29.11.2010.
(151) 20.05.2011.
(300) 29.11.2010.
(732) **Lovopromet doo**; Čamurlijski put bb, 18000 Niš, RS

(540)

(531) 01.03.02; 02.01.12; 03.07.24; 03.09.01; 18.03.17; 19.01.08; 21.03.15; 29.01.14
(591) плава, жута, црвена, зелена
(511) Кл. 29: риба.

---

(111) **62762** (181) **29.11.2020.**
(210) Ж- 2010-1938 (220) 29.11.2010.
(151) 20.05.2011.
(300) 29.11.2010.
(732) **Lovopromet doo**; Čamurlijski put bb, 18000 Niš, RS
(540)

(531) 03.09.01; 03.09.24; 27.01.01; 27.01.16; 27.05.01; 29.01.04
(591) плава-модра
(511) Кл. 29: риба.

---

(111) **62763** (181) **29.11.2020.**
(210) Ж- 2010-1939 (220) 29.11.2010.
(151) 20.05.2011.
(300) 29.11.2010.
(732) **Lovopromet doo**; Čamurlijski put bb, 18000 Niš, RS
(540)

(531) 03.09.01; 03.09.24; 18.03.23; 26.11.13; 27.05.01; 27.05.12; 27.05.17; 29.01.04
(591) плава-модра
(511) Кл. 29: риба.

---

(111) **62764** (181) **03.11.2020.**
(210) Ж- 2010-1793 (220) 03.11.2010.
(151) 23.05.2011.
(300) 03.11.2010.
(732) **Privredno društvo za proizvodnju konditorskih proizvoda i proizvoda od voća kompanija "HISSAR" d.o.o.**; 11000 Beograd, Požeška 65b, RS
(540)

(531) 03.05.19; 05.01.12; 05.07.18; 08.01.19; 25.05.05; 26.01.02; 26.01.18; 27.05.01; 27.05.03; 27.05.10; 29.01.15
(591) црвена, бела, жута, зелена, наранџаста, браон
(511) Кл. 30: пенасти производ са какао преливом.

---

(111) **62765** (181) **03.11.2020.**
(210) Ж- 2010-1792 (220) 03.11.2010.
(151) 23.05.2011.
(300) 03.11.2010.
(732) **Privredno društvo za proizvodnju konditorskih proizvoda proizvoda od voća kompanija "HISSAR" d.o.o.**; 11000 Beograd, Požeška 65b, RS
(540)

(531) 26.01.02; 26.01.18; 26.03.01; 26.07.03; 27.05.01; 27.05.03; 27.05.10; 29.01.13
(591) црвена, бела, жута
(511) Кл. 30: пенасти производ са какао преливом.

---

(111) **62766** (181) **03.03.2020.**
(210) Ж- 2010-299 (220) 03.03.2010.
(151) 23.05.2011.
(300) 03.03.2010.
(732) **ALPHA BANK A.E.**; 40 Stadiou Street, Athens, GR
(740) Марија Петровић, адвокат, Тадеуша Кошћушка бр. 30, 11000 Београд
(540)

(531) 01.15.23; 27.03.01; 27.05.01; 27.05.10; 29.01.15
(591) црна, плава, зелена, циклама, наранџаста, бела
(511) Кл. 16: хартија, картон и производи од њих, који нису укључени у друге класе; штампане ствари; књиговезачки материјал; фотографије; канцеларијски материјал; лепила за канцеларијске и кућне потребе; уметнички материјали; кичице; писаће машине и канцеларијски реквизити (изузев намештаја); материјали за обуку и наставу (изузев апарата); пластични материјал за паковање (који није укључен у друге класе); штампарска слова; клишеи.

Кл. 35: оглашавање; вођење послова; пословно управљање.
Кл. 36: осигурање; финансијски послови; новчани (монетарни) послови, укључујући издавање кредитних карата; послови везани за непокретности.

(111) **62767** (181) **16.12.2020.**
(210) Ж- 2010-2069 (220) 16.12.2010.
(151) 23.05.2011.
(300) 16.12.2010.
(732) **MERITAS INC.**; 800 Hennepin Avenue, Suite 600, Minnepolis, Minnesota 5 5403, US
(740) ОАД Лалин и др., адвокати Радован Лалин и Весна Лудошки, Сестара Нинковић 11/2, 21000 Нови Сад
(540)

MERITAS

(511) Кл. 45: правне услуге; услуге обезбеђења ради заштите имовине и лица; индивидуалне и друштвене услуге које пружају други, ради задовољења потреба појединаца.

(111) **62768** (181) **26.07.2020.**
(210) Ж- 2010-1318 (220) 26.07.2010.
(151) 23.05.2011.
(300) 26.07.2010.
(732) **McDonald's International Property Company, Ltd.**; 2711 Centerville Road, Suite 400, Wilmington, Delaware 19808, US
(740) Живковић Зоран, дипл. инжењер, 11000 Београд, Алексе Ненадовића 16
(540)

McMUFFIN

(511) Кл. 30: сендвичи направљени од енглеског мафина, меса и сирева.

(111) **62769** (181) **15.12.2020.**
(210) Ж- 2010-2062 (220) 15.12.2010.
(151) 23.05.2011.
(300) 15.12.2010.
(732) **Društvo za spoljnu i unutrašnju trgovinu i usluge ENERGOTRADE DOO**; Karađorđeva 36, 11000 Beograd, RS
(740) Трифуновић Јасна, Кнез Михајлова 7/IV, 11000 Београд
(540)

FLAME

(531) 27.05.01; 27.05.17; 29.01.02
(591) жута
(511) Кл. 1: хемијски потпаљивачи ватре, нарочито коцке за потпалу.
Кл. 4: горива, нарочито горива за потпаљивање ватре.
Кл. 11: апарати за осветљавање, грејање и кување, нарочито за потпаљивање ватре.

(111) **62770** (181) **28.12.2020.**
(210) Ж- 2010-2141 (220) 28.12.2010.
(151) 23.05.2011.
(300) 28.12.2010.
(732) **MIŠKOVIĆ MILORAD**; 11070 Beograd, Mihaila Pupina 10a, RS
(540)

COC
СОС МАРКЕТИ ДОО

(531) 27.05.01; 27.05.10; 27.05.21; 28.05.00; 29.01.01
(591) црвена
(511) Кл. 29: месо, риба, живина; месне прерађевине; конзервисано, замрзнуто, сушено и кувано воће и поврће; желеи, џемови, компоти; јаја, млеко и млечни производи; јестива уља и масти.
Кл. 30: кафа, чај, какао, шећер, пиринач, замена кафе; брашно и производи од житарица, хлеб, колачи и посластице, сладоледи; мед; квасац, прашак за пециво; со, сенф; сирће, сосови (као додаци); зачини.
Кл. 31: пољопривредни, вртларски и шумарски производи и зрневље који нису укључени у друге класе; свеже воће и поврће.
Кл. 32: пиво; минералне и содне воће и друга безалкохолна пића; пића од воћа и воћни сокови.
Кл. 33: алкохолна пића (изузев пива).

(111) **62771** (181) **23.09.2020.**
(210) Ж- 2010-1579 (220) 23.09.2010.
(151) 24.05.2011.
(300) 23.09.2010.
(732) **MONTANA PLUS d.o.o.**; 10000 Zagreb, Planinska b.b., HR
(740) Адвокати др Миленко Манигодић и Ђуро Манигодић, 11111 Београд, Кумановска 2-б
(540)

MONTANA PLUS

(511) Кл. 30: сендвичи, јела од брашна, колачи, пецива, посластице.
Кл. 32: воћни напици, воћни сокови.

(111) **62772** (181) **23.09.2020.**
(210) Ж- 2010-1580 (220) 23.09.2010.
(151) 24.05.2011.
(300) 23.09.2010.
(732) **MONTANA PLUS d.o.o.**; 10000 Zagreb, Planinska b.b., HR

(740) Адвокати др Миленко Манигодић и Ђуро Манигодић, 11111 Београд, Кумановска 2-б
(540)

(531) 24.17.07; 26.01.02; 26.01.18; 27.05.01; 27.05.11; 27.05.17; 29.01.13
(591) жута, плава, црвена и бела
(511) Кл. 30: сендвичи, јела од брашна, колачи, пецива, посластице.
Кл. 32: воћни напици, воћни сокови.

---

(111) **62773** (181) **23.09.2020.**
(210) Ж- 2010-1581 (220) 23.09.2010.
(151) 24.05.2011.
(300) 23.09.2010.
(732) **MONTANA PLUS d.o.o.**; 10000 Zagreb, Planinska b.b., HR
(740) Адвокати др Миленко Манигодић и Ђуро Манигодић, 11111 Београд, Кумановска 2-б
(540)

(531) 24.17.07; 26.01.02; 26.01.18; 27.05.01; 27.05.09; 27.05.10; 27.05.11; 27.05.17; 29.01.14
(591) жута, плава, црвена, бела
(511) Кл. 30: сендвичи, јела од брашна, колачи, пецива, посластице.
Кл. 32: воћни напици, воћни сокови.

---

(111) **62774** (181) **23.07.2020.**
(210) Ж- 2010-1306 (220) 23.07.2010.
(151) 24.05.2011.
(300) 23.07.2010.
(732) **Udruženje građana "Srpski sabor Dveri"**; Višegradska 6-1/11, Beograd, RS
(540)

(531) 02.09.01; 26.01.02; 26.01.06; 26.04.01; 26.04.14; 26.04.18; 26.13.25; 27.05.01; 27.05.24; 29.01.12
(591) црвена и бела
(511) Кл. 16: штампане ствари, канцеларијски материјал.

---

(111) **62775** (181) **23.07.2020.**
(210) Ж- 2010-1307 (220) 23.07.2010.
(151) 24.05.2011.
(300) 23.07.2010.
(732) **Udruženje građana "Srpski sabor Dveri"**; Višegradska 6-1/11, Beograd, RS
(540)

(531) 26.01.18; 26.04.01; 26.04.18; 27.05.01; 27.05.14; 27.05.24; 29.01.12
(591) плава и бела
(511) Кл. 16: штампане ствари, канцеларијски материјал.

---

(111) **62776** (181) **23.08.2020.**
(210) Ж- 2010-1452 (220) 23.08.2010.
(151) 24.05.2011.
(300) 23.08.2010.
(732) **Fabrika za preradu voća i povrća NECTAR doo**; Novosadski put 9, Bačka Palanka, RS
(540)

(531) 01.15.19; 05.03.13; 19.07.23; 19.07.25; 26.01.02; 26.01.18; 27.01.15; 27.05.01; 27.05.03; 27.05.17
(591) наранџаста, бела, плава, зелена, црвена
(511) Кл. 32: безалкохолна пића; и други препарати за производњу пића.

---

(111) **62777** (181) **24.08.2020.**
(210) Ж- 2010-1459 (220) 24.08.2010.
(151) 24.05.2011.
(300) 24.08.2010.
(732) **Privredno društvo Pietro Dell Oro doo**; 11000 Beograd, Trnska 2, RS
(540)

(531) 25.01.19; 26.04.06; 26.04.18; 27.05.01; 27.05.13; 29.01.12

(591) бордо и златна
(511) Кл. 43: услуге обезбеђења хране и пића; привремени смештај.

(111) **62778** (181) **21.03.2021.**
(210) Ж- 2011-427 (220) 21.03.2011.
(151) 24.05.2011.
(300) 21.03.2011.
(732) **Mlekara a.d.**; Tolminska 10, 24000 Subotica, RS
(740) Драгољуб М. Ђосовић, Војводе Драгомира 27, 11000 Београд
(540)

(531) 01.15.14; 05.05.22; 05.11.11; 08.03.01; 19.01.08; 25.01.01; 27.05.01; 29.01.15
(591) црвена, бела, жута, плава, сива
(526) zdravo
(511) Кл. 29: млеко.

(111) **62779** (181) **07.12.2020.**
(210) Ж- 2010-2007 (220) 07.12.2010.
(151) 24.05.2011.
(300) 07.12.2010.
(732) **Ramiz Hashimov Baku**; Surahani district Qara-Cuhur V. Kulijev str. 4/5, AZ
(740) Славица Стојадиновић, Булевар Зорана Ђинђића 12б лок. 67, 11070 Нови Београд
(540)

Mr. Fettah Mp. Феттах

(511) Кл. 29: месо, риба, живина и дивљач; месне прерађевине; конзервисано, замрзнуто, сушено и кувано воће и поврће; желеи, џемови, компоти; јаја, млеко и млечни производи; јестива уља и масти, пића на бази млека (у којима млеко преовладава) .
Кл. 30: кафа, чај, какао, шећер, пиринач, тапиока, саго, замена кафе; брашно и производи од житарица, хлеб, колачи и посластице, сладоледи; мед, меласа; квасац, прашак за пециво; со, сенф; сирће, сосови (као додаци); зачини.
Кл. 35: оглашавање; посебно услуге рекламирања, комуникције сајавношћу организовање сајмова и изложби у комерцијалне или рекламне сврхе.

(111) **62780** (181) **18.06.2020.**
(210) Ж- 2010-1092 (220) 18.06.2010.
(151) 24.05.2011.
(300) 18.06.2010.
(732) **Đuro Čepić**; Antifašističke borbe br. 17, 11070 Novi Beograd, RS
(540)

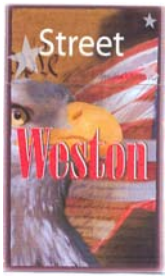


(531) 01.01.01; 03.07.01; 19.03.03; 24.07.01; 27.05.01; 29.01.14
(591) црвена, бела, сива, жута, браон, црна
(511) Кл. 34: дуван и производи од дувана, цигарете, цигарилоси и производи за пушаче.

(111) **62781** (181) **23.12.2020.**
(210) Ж- 2010-2121 (220) 23.12.2010.
(151) 24.05.2011.
(300) 23.12.2010.
(732) **COLOR MEDIA INTERNATIONAL DOO NOVI SAD**; Temerinska br. 102, 21000 Novi Sad, RS
(740) Адвокатска канцеларија Маровић, 21000 Нови Сад, Булевар ослобођења бр. 82/III
(540)

Мое ♥Бебе

(531) 02.09.01; 27.05.01; 27.05.17; 28.05.00
(511) Кл. 16: часописи и магазини.
Кл. 41: издавање часописа, магазина и штампаних ствари.

(111) **62782** (181) **17.01.2021.**
(210) Ж- 2011-57 (220) 17.01.2011.
(151) 24.05.2011.
(300) 17.01.2011.
(732) **Đorđe Pajović**; Jurija Gagarina 194/3, 11070 Novi Beograd, RS
(540)

TAP 011

(511) Кл. 35: оглашавање; вођење послова; пословно управљање; канцеларијски послови.
Кл. 41: образовне услуге; припремање обуке; разонода; спортске и културне активности.

(111) **62783** (181) **03.11.2020.**
(210) Ж- 2010-1801 (220) 03.11.2010.
(151) 24.05.2011.
(300) 03.11.2010.

(732) **KMS AUTOELEKTRIKA I DELOVI d.o.o.**; Ustanička 128a, lokal 8a, 11010 Beograd-Voždovac, RS
(740) Бранислав Марјановић, Булевар краља Александра 189, 11000 Београд
(540)

(531) 26.04.02; 26.04.18; 27.05.01; 29.01.01
(591) црвена
(511) Кл. 7: машине и машински алати; мотори и погонске машине (осим за сувоземна возила); машинске спојнице и трансмисиони елементи (осим за сувоземна возила); пољопривредне справе осим оних којима се ручно управља; инкубатори за јаја.
Кл. 9: апарати и инструменти научни, поморски, геодетски, фотографски, кинематографски, оптички, за вагање, мерење, сигнализацију, контролу (инспекцију), спасавање и наставу; апарати и инструменти за провођење, прекид, трансформацију, акумулацију, регулисање или контролу електричне енергије; апарати за снимање, пренос и репродуковање звука или слике; магнетни носиоци података, дискови за снимање; аутоматске машине и механизми за апарате који се покрећу новцем или жетоном; регистар касе, рачунске машине, опрема за обраду података и компјутери; апарати за гашење пожара.
Кл. 12: возила; апарати за кретање по земљи, ваздуху или води.

---

(111) **62784** (181) **17.06.2020.**
(210) Ж- 2010-1081 (220) 17.06.2010.
(151) 24.05.2011.
(300) 17.06.2010.
(732) **World of Decoration doo Beograd**; Nikole Marakovića 37, 11000 Beograd, RS
(740) Драган Псодоров, 11000 Београд, Интернаионалних бригада 38
(540)

(531) 26.04.02; 26.04.18; 26.11.12; 27.05.01; 27.05.13
(511) Кл. 20: намештај, огледала, оквири за слике, производи од дрвета, плуте, трске, рогоза, врбовог прућа, рога, кости, слоноваче, китове кости, шкољки, ћилибара, седефа, морке пене и замене свих ових материјала, или од пластике.
Кл. 24: текстил и текстилни производи који нису обухваћени другим класама, прекривачи за кревете и столове.
Кл. 35: пословно управљање.

---

(111) **62785** (181) **22.10.2020.**
(210) Ж- 2010-1734 (220) 22.10.2010.
(151) 25.05.2011.
(300) 22.10.2010.
(732) **Tehno-al Marinković d.o.o.**; Slovenski put b.b. 35000 Jagodina, RS
(540)

(531) 07.01.24; 07.03.11; 27.05.01; 27.05.09; 27.05.12; 27.05.17; 27.05.19
(511) Кл. 6: алуминијумска столарија, нарочито прозори и врата
Кл. 19: пластична столарија, нарочито прозори и врата
Кл. 40: пластификација метала.

---

(111) **62786** (181) **09.11.2020.**
(210) Ж- 2010-1818 (220) 09.11.2010.
(151) 25.05.2011.
(300) 09.11.2010.
(732) **Privredno društvo za proizvodnju čokolade, bombona i peciva "PIONIR" DOO** ; Beograd, Požeška 65/b, RS
(540)

(531) 02.09.01; 05.07.06; 08.01.19; 08.01.22; 25.01.01; 26.01.02; 26.01.18; 26.04.07; 29.01.14
(591) црвена, бела, жута, браон
(511) Кл. 30: чоколада са лешником.

---

(111) **62787** (181) **09.11.2020.**
(210) Ж- 2010-1819 (220) 09.11.2010.
(151) 25.05.2011.
(300) 09.11.2010.
(732) **Privredno društvo za proizvodnju čokolade, bombona i peciva "PIONIR" DOO**; Beograd, Požeška 65/b, RS
(540)

(531) 01.15.09; 02.09.01; 26.01.02; 26.01.18; 26.11.06; 27.05.01; 27.05.03; 27.05.10; 29.01.13
(591) црвена, бела, жута
(511) Кл. 30: медењаци.

(111) **62788** (181) **22.10.2020.**
(210) Ж- 2010-1735 (220) 22.10.2010.
(151) 25.05.2011.
(300) 22.10.2010.
(732) **Tehno-al Marinković d.o.o.**; Slovenski put b.b. 35000 Jagodina, RS
(540)

(531) 07.01.24; 07.03.11; 27.05.01; 27.05.09; 27.05.12; 27.05.17; 27.05.19
(511) Кл. 6: алуминијумска столарија, нарочито прозори и врата
Кл. 19: пластична столарија, нарочито прозори и врата
Кл. 40: пластификација метала.

(111) **62789** (181) **24.12.2020.**
(210) Ж- 2010-2134 (220) 24.12.2010.
(151) 25.05.2011.
(300) 24.12.2010.
(732) **LABORATOIRES DE BIOLOGIE VEGETALE YVES ROCHER**; La Croix des Archers, 56200 La Gacilly, FR
(740) Душан Л. Петошевић, адвокат, Козјачка 15, 11000 Београд
(540)

(531) 05.05.20; 26.01.04; 26.01.15; 27.05.01; 27.05.09; 27.05.10
(511) Кл. 3: сапуни; дезодоранси за личну употребу; парфимеријски производи за козметичку употребу; производи за парфемисање дома искључујући испариваче; врећице за парфемисање постељине; етерична уља; козметички производи у галенском облику за немедицинску употребу; козметички производи за негу лица и тела; козметичке купке и препарати за туширање; козметички производи за шминкање; производи за самопотамњивање; производи за негу, чишћење и побољшање изгледа косе за козметичку употребу; козметички производи за негу стопала и руку; зубне пасте.
Кл. 5: додаци исхрани који могу садржати протеине, угљене хидрате, липиде, пептиде и/или влакна, или микронутриенте попут витамина и/или минерала и/или аминокиселина и/или масних и/или биљних киселина, и/или биљних екстраката и/или прочишћених биљних молекула, намењених нези коже, тела, лица, косе или ноктију, у облику капсула, таблета, ампула, квасца, прашка, табли, крема или напитака за козметичке намене.

(111) **62790** (181) **15.12.2020.**
(210) Ж- 2010-2063 (220) 15.12.2010.
(151) 25.05.2011.
(300) 15.12.2010.
(732) **INDIGO PRODUCTION DOO**; Živojina Lukića Vajara 58A, 11000 Beograd, RS
(740) Ковачевић Срђан, Јована Ђорђевића 11, 21000 Нови Сад, П. фах. 393
(540)

(531) 26.11.03; 27.05.01; 27.05.09; 27.05.11; 27.05.19
(591) црна, светло сива и тамно сива
(511) Кл. 16: хартија, картон и производи од њих који нису укључени у друге класе, штампане ствари, књиговезачки материјал, фотографије, канцеларијски материјал, лепила за канцеларијске и кућне потребе, уметнички материјали, кичице, писаће машине и канцеларијски ртеквизити (изузев намештаја, материјали за обуку и наставу (изузев апарата), пластични материјали за паковање (који није укључен у друге класе), штампарска слова, клишеи.
Кл. 35: оглашавање, вођење послова, пословно управљање, канцеларијски послови.
Кл. 38: телекомуникације.
Кл. 41: образовне услуге, припремање обуке, разонода, спортске и културне активности.

(111) **62791** (181) **30.12.2020.**
(210) Ж- 2010-2160 (220) 30.12.2010.
(151) 26.05.2011.
(300) 30.12.2010.
(732) **Privredno društvo ORIFLAME KOZMETIKA d.o.o. Beograd**; Vladimira Popovića 40, 11070 Novi Beograd, RS
(740) Ненад Алексић, Василија Ивановића 12, 11000 Београд
(540)

(531) 02.09.01; 26.04.01; 26.04.14; 26.04.18; 27.05.01; 27.05.12; 29.01.13

(591) бела, зелена, сива
(511) Кл. 41: разонода; организација такмичења забавног карактера.

(111) **62792** (181) **17.02.2020.**
(210) Ж- 2010-230 (220) 17.02.2010.
(151) 26.05.2011.
(300) 17.02.2010.
(732) **Nikola Varagić and Dušan Kovačević**; Branka Ćopića br. 2, 11000 Beograd, RS and Ravanička br. 3, 21000 Novi Sad, RS
(740) Предраг Константиновић, 11000 Београд, Тадеуша Кошћушка 8
(540)

(531) 26.02.01; 26.02.03; 26.02.05; 26.04.01; 26.04.10; 26.04.18; 27.05.01; 27.05.21; 29.01.13
(591) црна, плава, бела
(511) Кл. 38: телекомуникације.
Кл. 42: научне и технолошке услуге и истраживање и пројектовање у вези наведених услуга; услуге индустријске анализе и истраживања; пројектовање и развој компјутерског хардвера и софтвера.

(111) **62793** (181) **12.01.2021.**
(210) Ж- 2011-34 (220) 12.01.2011.
(151) 26.05.2011.
(300) 12.01.2011.
(732) **British American Tobacco (Brands) Inc.**; 2711 Centerville Road, Suite 300, Wilmington, Delaware 19808, US
(740) Живко Мијатовић & Партнерс д.о.о., 11000 Београд, Таковска 58/14
(540)

PALL MALL AZURE

(511) Кл. 34: цигарете; дуван; производи од дувана; упаљачи; шибице; артикли за пушаче.

(111) **62794** (181) **14.01.2021.**
(210) Ж- 2011-48 (220) 14.01.2011.
(151) 26.05.2011.
(300) 14.01.2011.
(732) **Nike International Ltd. a Bermuda company**; One Bowerman Drive, Beaverton, OR 97005-6453, US
(740) Петошевић д.о.о., 11000 Београд, Веле Нигринове 16А
(540)

HYPERCOOL

(511) Кл. 25: одећа и покривала за главу.

(111) **62795** (181) **17.01.2021.**
(210) Ж- 2011-55 (220) 17.01.2011.
(151) 26.05.2011.
(300) 17.01.2011.
(732) **Kaane American International Tobacco Co. Ltd.**; PO Box No. 61021, Jebel Ali Free Zone, Dubai, AE
(740) ПЕТОШЕВИЋ д.о.о., Веле Нигринове 16А, 11000 Београд
(540)

(531) 05.03.01; 05.03.15; 06.01.01; 06.01.04; 19.03.03; 24.09.02; 24.09.07; 26.04.16; 27.05.01; 27.05.10
(511) Кл. 34: цигарете, дуван, артикли за пушаче.

(111) **62796** (181) **14.01.2021.**
(210) Ж- 2011-47 (220) 14.01.2011.
(151) 30.05.2011.
(300) 14.01.2011.
(732) **Agan Chemical Manufacturers Ltd.**; Northern Industrial Zone, P.O. Box 262, Ashdod 77102, IL
(740) Живко Мијатовић & Партнерс д.о.о., Таковска 58/14, 11000 Београд
(540)

(531) 27.05.01; 27.05.09; 27.05.12; 27.05.19
(511) Кл. 5: пестициди и хербициди.

(111) **62797** (181) **31.12.2020.**
(210) Ж- 2010-2161 (220) 31.12.2010.
(151) 30.05.2011.
(300) 31.12.2010.
(732) **Anadolu Efes Biracılık ve Malt Sanayi Anonim Şirketi**; Bahçelievler Mah. Adnan Kahveci Bulvarı No: 5, Bahçelievler Istanbul, TR

(740) Живко Мијатовић & Партнерс, 11000 Београд, Таковска 58
(540)

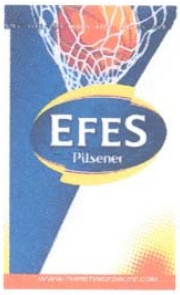


(531) 21.03.01; 21.03.16; 25.05.03; 26.01.02; 26.01.18; 27.05.01; 29.01.15
(591) плава, тамно црвена, светло црвена, бела, жута и наранџаста
(511) Кл. 32: пиво; препарати за производњу пива.

---

(111) **62798** (181) **20.12.2020.**
(210) Ж- 2010-2098 (220) 20.12.2010.
(151) 30.05.2011.
(300) 20.12.2010.
(732) **DIN "Fabrika duvana" Niš a.d., u sastavu Philip Morris International**; 12. februara 74, 18000 Niš, RS
(740) "Карановић-Николић" ортачко адвокатско друштво, мр Драгомир Којић, адвокат, Лепеничка 7, 11000 Београд
(540)

(531) 19.03.03; 24.01.15; 24.01.19; 26.04.09; 26.11.06; 27.05.01; 29.01.13
(591) бела, плава и сива
(511) Кл. 34: цигарете.

---

(111) **62799** (181) **26.11.2020.**
(210) Ж- 2010-1933 (220) 26.11.2010.
(151) 30.05.2011.
(300) 26.11.2010.1,488,291 12.07.2010. CA
(732) **Research In Motion Limited**; 295 Phillip Street, Waterloo, Ontario, Canada N2L 3W8, CA
(740) Петошевић д.о.о., Веле Нигринове 16А, 11000 Београд
(540)

BLACKBERRY PROTECT

(511) Кл. 9: апарати за снимање, пренос или репродукцију података, звука или слике; бежичне приручне јединице, персонални дигитални асистенти, бежични телефони, мобилни телефони, целуларни телефони, паметни телефони и видео телефони; компјутерски софтвер; електронске приручне јединице за бежични пренос података и/или гласовних сигнала; опрема за електронске приручне јединице за бежични пренос података и/или гласовног сигнала, нарочито, батерије, врата за батерије, опрема за ауто, пуњачи и држачи за пуњаче, слушалице, адаптери, стони држачи, стони пуњачи, каблови за компјутере, кутије, торбе и футроле; компјутерски комуникацијски софтвер за синхронизацију, пренос и заједничко коришћење гласа, података, календара, садржаја између једне или више приручних електронских јединица и података сачуваних у или повезаних са компјутером; компјутерски софтвер који омогућава пренос информација у вези са мапама, навигацијом, саобраћајем и другим информацијама од интереса путем телекомуникацијских мрежа, мобилних телефона, паметних телефона, електронских приручних јединица и уређаја за навигацију; компјутерски софтвер за преглед и преузимање електронских мапа са интеренета; компјутерски софтвер за рад са планерима пута.
Кл. 38: телекомуникације; омогућавање приступа интернету; омогућавање приступа електронским базама података, услуге омогућавања приступа ГПС (Глобални Позициони Систем) навигације; пружање услуга повезивања и приступа електронским комуникационим мрежама, за пренос или пријем аудио, видео или мултимедијалног садржаја; пружање услуга повезивања и приступа електронским комуникационим мрежама за пренос или пријем компјутерског софтвера и апликација; услуге приступа мрежи; услуге електронске поште; испорука порука електронским преносом; услуге бежичног слања порука, нарочито услуге које омогућавају кориснику да пошаље и/или прими поруке преко бежичне мреже података; једносмерне и двосмерне пејџинг услуге; услуге преноса и пријема гласовне комуникације; електронски пренос компјутерског софтвера и апликација преко интернета и других компјутерских и електронских мрежа за комуникацију и бежичних уређаја; емитовање; емитовање или пренос радио програма; емитовање или пренос проточног дигиталног аудио и видео садржаја као и садржаја који се може преузети преко компјутерске и других комуникационих мрежа; консултације у вези телекомуникација, наиме, давање информација трећим лицима као помоћ код развоја и интегрисања једносмерне и двосмерне бежичне везе са подацима, укључујући корпоративне и кућне/личне податке, и/или гласовну комуникацију.

Кл. 42: научне и технолошке услуге и услуге истраживања и пројектовања у вези са њима; услуге индустријске анализе и истраживања; пројектовање и развој компјутерског хардвера и софтвера; услуге софтвера као услуге (SAAS); обезбеђивање алата за претрагу за добијање података преко комуникационих мрежа; интернет услуге; претрага, преглед и преузимање информација, сајтова и других ресурса расположивих на глобалним компјутерским мрежама и другим комуникационим мрежама за друге; консултантске услуге и услуге техничке подршке у вези са компјутерским хардвером и софтвером, телекомуникацијама и ГПС (Глобални Позициони Систем) услугама; обезбеђивање он-лајн опреме преко глобалне компјутерске мреже и других компјутерских и електронских комуникационих мрежа, да се омогући корисницима да програмирају аудио, видео, филмове, текст и друге мултимедијалне садржаје; услуге техничке подршке, наиме, ажурирање и одржавање компјутерског софтвера и програми за тражење грешака за дијагностицирање и решавање проблема код уређаја за бежично повезивање и код одговарајућег компјутерског софтвера и хардвера; пружање информација о времену преко телекомуникацијске мреже, мобилних телефона, телефона, паметних телефона, електронских приручних уређаја и уређаја за навигацију.

(111) **62800** (181) **07.12.2020.**
(210) Ж- 2010-2006 (220) 07.12.2010.
(151) 30.05.2011.
(300) 07.12.2010.
(732) **AD AROMA FUTOG**; Sonje Marinković 49, Futog , RS
(540)

(531) 26.04.02; 26.04.18; 27.05.01; 27.05.10; 27.05.24; 29.01.14
(591) цијана, магенте, жута, црна+пантоне 298C, пантоне 293C, пантоне 295C
(511) Кл. 30: производи од житарица.

# ИНДЕКСНЕ ТАБЕЛЕ ЗА ЖИГОВЕ

# INDEX TABLES FOR TRADEMARKS


- **ИНДЕКС НОСИЛАЦА ЖИГОВА (стр. 2743)**
- INDEX OF THE HOLDER OF THE REGISTRATION (p. 2743)

- **ИНДЕКС БРОЈЕВА ЖИГОВА (стр. 2850)**
- INDEX OF THE TRADEMARK NUMBERS (p. 2850)

- **ИНДЕКС ПО КЛАСАМА НИЧАНСКЕ КЛАСИФИКАЦИЈЕ РОБА И УСЛУГА (стр. 2852)**
- INDEX ACCORDING TO THE NICE CLASSIFICATION OF GOODS AND SERVICES (p. 2852)

## ИНДЕКС НОСИЛАЦА ЖИГОВА

INDEX OF THE HOLDER OF THE REGISTRATION

| (732) | (111) | (210) |
|---|---|---|
| A.D. CENTROPROIZVOD prehrambena industrija | 62568 | Ж- 2010-1842 |
| A.D. CENTROPROIZVOD, prehrambena industrija | 62572 | Ж- 2010-1846 |
| ABBOTT LABORATORIES | 62604 | Ж- 2010-2142 |
| AD AROMA FUTOG | 62800 | Ж- 2010-2006 |
| AD IMLEK | 62669 | Ж- 2010-1693 |
| AD IMLEK | 62687 | Ж- 2010-1694 |
| AD Mlekara Subotica | 62725 | Ж- 2010-1151 |
| ADRIA MEDIA SERBIA D.O.O. BEOGRAD | 62737 | Ж- 2010-1959 |
| ADRIA MEDIA SERBIA D.O.O. BEOGRAD | 62738 | Ж- 2010-1958 |
| Agan Chemical Manufacturers Ltd | 62796 | Ж- 2011-47 |
| AGRANELA d.o.o. | 62577 | Ж- 2010-1862 |
| AGRANELA d.o.o. | 62578 | Ж- 2010-1863 |
| AGROMARKET doo | 62533 | Ж- 2011-340 |
| AGROMARKET doo | 62534 | Ж- 2011-341 |
| AGROMARKET doo | 62711 | Ж- 2011-608 |
| AGROSIT SEMENARSTVO d.o.o. | 62630 | Ж- 2010-635 |
| Akcionarsko društvo NIVA | 62601 | Ж- 2010-1687 |
| Akcionarsko društvo za proizvodnju konditorskih proizvoda Soko Nada Štark | 62559 | Ж- 2010-1780 |
| Akcionarsko društvo za proizvodnju konditorskih proizvoda Soko Nada Štark | 62560 | Ж- 2010-1785 |
| Akcionarsko društvo za proizvodnju konditorskih proizvoda Soko Nada Štark | 62599 | Ж- 2010-1784 |

| (732) | (111) | (210) |
|---|---|---|
| Akcionarsko društvo za proizvodnju konditorskih proizvoda Soko Nada Šark | 62672 | Ж- 2010-1817 |
| Aleksandar Diklić and Stefan Diklić | 62508 | Ж- 2010-534 |
| Aleksandar Jevtović | 62652 | Ж- 2010-1468 |
| Aleksandar Rodić | 62593 | Ж- 2010-1900 |
| ALPHA BANK A.E. | 62766 | Ж- 2010-299 |
| ALVOGEN PHARMA SERBIA DOO Društvo za posredovanje, marketing i usluge sa ograničenom odgovornošću | 62535 | Ж- 2011-318 |
| Anadolu Efes Biracılık ve Malt Sanayi Anonim Şirketi | 62797 | Ж- 2010-2161 |
| APATINSKA PIVARA APATIN DOO | 62516 | Ж- 2010-1103 |
| APATINSKA PIVARA APATIN DOO | 62606 | Ж- 2011-469 |
| APATINSKA PIVARA APATIN DOO | 62608 | Ж- 2011-470 |
| APATINSKA PIVARA APATIN DOO | 62676 | Ж- 2010-1995 |
| APATINSKA PIVARA APATIN DOO | 62695 | Ж- 2010-1994 |
| ARCOR S.A.I.C | 62717 | Ж- 2010-1449 |
| Aroma Brand doo | 62517 | Ж- 2010-1299 |
| AstraZeneca UK Limited | 62520 | Ж- 2010-1612 |
| AstraZeneca UK Limited | 62521 | Ж- 2010-1611 |
| AstraZeneca UK Limited | 62522 | Ж- 2010-1610 |
| AstraZeneca UK Limited | 62523 | Ж- 2010-1607 |
| AstraZeneca UK Limited | 62524 | Ж- 2010-1602 |
| AstraZeneca UK Limited | 62525 | Ж- 2010-1604 |
| AstraZeneca UK Limited | 62526 | Ж- 2010-1605 |

| (732) | (111) | (210) |
|---|---|---|
| AstraZeneca UK Limited | 62527 | Ж- 2010-1606 |
| AstraZeneca UK Limited | 62528 | Ж- 2010-1609 |
| AstraZeneca UK Limited | 62529 | Ж- 2010-1603 |
| AstraZeneca UK Limited | 62530 | Ж- 2010-1608 |
| BEO IMPERA D.O.O. | 62552 | Ж- 2010-1676 |
| BEST WESTERN INTERNATIONAL, INC. | 62576 | Ж- 2010-1860 |
| BEST WESTERN INTERNATIONAL, INC . | 62581 | Ж- 2010-1871 |
| BEST WESTERN INTERNATIONAL, INC . | 62718 | Ж- 2010-1518 |
| BEST WESTERN INTERNATIONAL, INC . | 62719 | Ж- 2010-1516 |
| Bonatti, d.o.o | 62739 | Ж- 2010-1466 |
| BOSNALIJEK, Farmaceutska i hemijska industrija d.d. | 62671 | Ж- 2011-451 |
| BOŽEN KOSMETIK d.o.o. | 62638 | Ж- 2009-187 |
| BOŽEN KOSMETIK d.o.o. | 62639 | Ж- 2009-188 |
| Bristol-Myers Squibb Company, a Delaware corporation | 62618 | Ж- 2010-1990 |
| Bristol-Myers Squibb Sarl a French limited liability company | 62616 | Ж- 2010-1989 |
| British American Tobacco (Brands) Inc. | 62793 | Ж- 2011-34 |
| Café Reklám Reklámügynökségi és Filmszolgáltató Kft. | 62752 | Ж- 2010-1297 |
| CARLSBERG SRBIJA DOO | 62705 | Ж- 2010-1864 |
| CBM Creative Brands Marken GmbH | 62543 | Ж- 2010-755 |
| Celsius Property B.V. Amsterdam (NL) | 62605 | Ж- 2010-2143 |
| Centro-fantastico d.o.o. Beograd | 62585 | Ж- 2010-1979 |
| Centro-fantastico d.o.o. Beograd | 62586 | Ж- 2010-1980 |
| CHURCH AND DWIGHT, CO., INC. | 62679 | Ж- 2010-2004 |

| (732) | (111) | (210) |
|---|---|---|
| CITY ROCK DOO | 62626 | Ж- 2010-1884 |
| CITY ROCK DOO | 62653 | Ж- 2010-1926 |
| CITY ROCK DOO | 62656 | Ж- 2010-1928 |
| CITY ROCK DOO | 62659 | Ж- 2010-1927 |
| Colgate-Palmolive Company (A Delaware Corporation) | 62634 | Ж- 2010-2144 |
| Colgate-Palmolive Company, a Delaware corporation | 62583 | Ж- 2010-1890 |
| Colgate-Palmolive Company, a Delaware corporation | 62696 | Ж- 2010-2010 |
| COLOR MEDIA INTERNATIONAL DOO | 62699 | Ж- 2010-2162 |
| COLOR MEDIA INTERNATIONAL DOO NOVI SAD | 62781 | Ж- 2010-2121 |
| ContourGlobal Development s.a.r.l. | 62592 | Ж- 2010-1879 |
| DAIICHI SANKYO COMPANY, LIMITED, Established under Japanese Law | 62697 | Ж- 2010-2021 |
| DIN Fabrika duvana Niš a.d., u sastavu Philip Morris International | 62569 | Ж- 2010-1843 |
| DIN Fabrika duvana Niš a.d., u sastavu Philip Morris International | 62570 | Ж- 2010-1844 |
| DIN Fabrika duvana Niš a.d., u sastavu Philip Morris International | 62571 | Ж- 2010-1845 |
| DIN Fabrika duvana Niš a.d., u sastavu Philip Morris International | 62798 | Ж- 2010-2098 |
| Discover Financial Services | 62579 | Ж- 2010-1870 |
| Discover Financial Services | 62674 | Ж- 2010-1869 |
| D-Link Corporation | 62557 | Ж- 2010-1713 |
| Đorđe Pajović | 62782 | Ж- 2011-57 |
| DRUŠTVO SA OGRANIČENOM ODGOVORNOŠĆU ZA PROIZVODNJU BOJA I LAKOVA , ZORKA COLOR ŠABAC, HAJDUK VELJKOVA BB | 62613 | Ж- 2010-1545 |

| (732) | (111) | (210) |
|---|---|---|
| DRUŠTVO SA OGRANIČENOM ODGOVORNOŠĆU ZA PROIZVODNJU BOJA I LAKOVA, ZORKA COLOR ŠABAC, HAJDUK VELJKOVA BB | 62614 | Ж- 2010-1546 |
| DRUŠTVO SA OGRANIČENOM ODGOVORNOŠĆU ZA PROIZVODNJU BOJA I LAKOVA, ZORKA COLOR ŠABAC, HAJDUK VELJKOVA BB | 62615 | Ж- 2010-1547 |
| DRUŠTVO ZA IZDAVAČKU DELATNOST, SPOLJNU I UNUTRAŠNJU TRGOVINU VODIČ ZA ŽIVOT DOO BEOGRAD | 62612 | Ж- 2010-1532 |
| Društvo za proizvodnju konditorskih proizvoda, trgovina i usluga ŽITOPRERADA DM d.o.o. | 62684 | Ж- 2010-2047 |
| Društvo za proizvodnju osvežavajućih napitaka, plastične ambalaže i mineralne vode HEBA AD Bujanovac | 62542 | Ж- 2010-557 |
| Društvo za promet i usluge MARSHALLAVT D.O.O. | 62595 | Ж- 2010-1901 |
| Društvo za spoljnu i unutrašnju trgovinu i usluge ENERGOTRADE DOO | 62769 | Ж- 2010-2062 |
| DUOCHEM d.o.o. | 62710 | Ж- 2011-576 |
| Đuro Čepić | 62780 | Ж- 2010-1092 |
| E.I. du Pont de Nemours and Company | 62690 | Ж- 2010-1298 |
| EDENRED | 62668 | Ж- 2010-1934 |
| EKO SERBIA A.D. Beograd | 62512 | Ж- 2010-1576 |
| EKO SERBIA A.D. Beograd | 62689 | Ж- 2010-1575 |
| ENERGOTEAM d.o.o. | 62709 | Ж- 2010-2156 |
| Eurocon Building Industries-FZC | 62548 | Ж- 2010-1582 |
| EUROPAPRESS HOLDING d.o.o. | 62662 | Ж- 2010-1291 |
| Fabrika za preradu voća i povrća NECTAR doo | 62663 | Ж- 2010-1453 |

| (732) | (111) | (210) |
|---|---|---|
| Fabrika za preradu voća i povrća NECTAR doo | 62776 | Ж- 2010-1452 |
| FIRMA PRODUKCYJNO-USLUGOWO-HANDLOWA MOKATE - Teresa Mokrysz | 62685 | Ж- 2010-1265 |
| FOREST LABORATORIES UK LIMITED | 62760 | Ж- 2010-2158 |
| Future Media d.o.o. | 62590 | Ж- 2010-1810 |
| Galenika a.d. | 62703 | Ж- 2011-621 |
| Galenika a.d. | 62731 | Ж- 2011-563 |
| Galenika a.d. | 62732 | Ж- 2011-564 |
| Galenika a.d. | 62733 | Ж- 2011-562 |
| Galenika a.d. | 62734 | Ж- 2011-566 |
| Galenika a.d. | 62735 | Ж- 2011-567 |
| Galenika a.d. | 62736 | Ж- 2011-565 |
| Georgia-Pacific Consumer Products LP | 62749 | Ж- 2010-1370 |
| Georgia-Pacific Consumer Products LP | 62756 | Ж- 2010-1371 |
| Giga-Byte Technology Co. Ltd. | 62510 | Ж- 2010-1647 |
| Giga-Byte Technology Co. Ltd. | 62511 | Ж- 2010-1651 |
| Giga-Byte Technology Co. Ltd. | 62750 | Ж- 2010-1648 |
| Giga-Byte Technology Co. Ltd. | 62758 | Ж- 2010-1652 |
| Gimnazija Svetozar Marković | 62631 | Ж- 2010-1396 |
| GLAXO GROUP LIMITED | 62633 | Ж- 2011-506 |
| GLAXO GROUP LIMITED | 62644 | Ж- 2011-507 |
| GOMADJO Co.d.o.o. | 62648 | Ж- 2010-929 |
| Gordana Stević Dulić | 62600 | Ж- 2010-889 |
| GRAND PROM akcionarsko društvo za proizvodnju, promet i usluge Beograd | 62649 | Ж- 2010-1935 |
| GRAND PROM akcionarsko društvo za proizvodnju, promet i usluge Beograd | 62650 | Ж- 2010-1936 |
| Grand prom akcionarsko društvo za proizvodnju, promet i usluge | 62551 | Ж- 2010-1646 |

| (732) | (111) | (210) |
|---|---|---|
| GUARDUAN PROTECT Doo | 62691 | Ж- 2010-1679 |
| Hemijska industrija Župa | 62589 | Ж- 2010-1046 |
| Henkel Merima d.o.o. | 62677 | Ж- 2010-1997 |
| HENKEL MERIMA D.O.O. KRUŠEVAC | 62646 | Ж- 2010-502 |
| Ilić Dušan | 62700 | Ж- 2010-636 |
| IMMUNO SYSTEMS DOO | 62728 | Ж- 2010-2043 |
| INDIGO PRODUCTION DOO | 62790 | Ж- 2010-2063 |
| INTERCHEM-HIM D.O.O. | 62558 | Ж- 2010-1774 |
| INTERCHEM-HIM D.O.O. | 62625 | Ж- 2010-1758 |
| International Truck Intellectual Property Company, LLC | 62755 | Ж- 2010-1373 |
| Intervet International B.V. | 62747 | Ж- 2010-613 |
| Japan Tobacco Inc. | 62660 | Ж- 2010-1510 |
| JAT-KETERING DOO | 62544 | Ж- 2010-1050 |
| Javno preduzeće Službeni glasnik | 62506 | Ж- 2010-1631 |
| Javno preduzeće Službeni glasnik | 62503 | Ж- 2010-1625 |
| Javno preduzeće Službeni glasnik | 62504 | Ж- 2010-1630 |
| Javno preduzeće Službeni glasnik | 62505 | Ж- 2010-1629 |
| Javno preduzeće Službeni glasnik | 62509 | Ж- 2010-1624 |
| Jelena Popović | 62580 | Ж- 2010-1878 |
| Jelena Popović | 62588 | Ж- 2010-1188 |
| JLO HOLDING COMPANY, LLC, Murphy & Kress, Inc. | 62654 | Ж- 2010-1421 |
| JLO HOLDING COMPANY, LLC, Murphy & Kress, Inc. | 62655 | Ж- 2010-1422 |
| JX Nippon Oil & Energy Corporation | 62623 | Ж- 2010-2032 |
| Kaane American International Tobacco Co. Ltd. | 62795 | Ж- 2011-55 |

| (732) | (111) | (210) |
|---|---|---|
| KAMAL KHANBABAEI GENERAL TRADING CO. L.L.C. | 62550 | Ж- 2010-1633 |
| KEIT Ltd. | 62680 | Ж- 2010-2036 |
| KENZAI GROUP DRUŠTVO SA OGRANIČENOM ODGOVORNOŠĆU BEOGRAD-ZEMUN | 62681 | Ж- 2010-2040 |
| KENZAI GROUP DRUŠTVO SA OGRANIČENOM ODGOVORNOŠĆU BEOGRAD-ZEMUN | 62682 | Ж- 2010-2041 |
| KIT COMMERCE D.O.O. | 62694 | Ж- 2010-1867 |
| KMS AUTOELEKTRIKA I DELOVI d.o.o. | 62783 | Ж- 2010-1801 |
| Koncern za proizvodnju i promet kondiktorskih proizvoda BAMBI-BANAT AD | 62540 | Ж- 2010-397 |
| Koncern za proizvodnju i promet konditorskih proizvoda BAMBI - BANAT AD | 62519 | Ж- 2010-271 |
| Koncern za proizvodnju i promet konditorskih proizvoda BAMBI-BANAT AD | 62627 | Ж- 2010-1866 |
| KOTEKS d.o.o. Preduzeće za proizvodnju i preradu mesa | 62647 | Ж- 2010-1800 |
| Kraft Foods Schweiz Holding GmbH | 62573 | Ж- 2010-1847 |
| Kurt Geiger Limited | 62693 | Ж- 2009-1872 |
| LABORATOIRES DE BIOLOGIE VEGETALE YVES ROCHER | 62789 | Ж- 2010-2134 |
| Les Publications Conde Nast S.A., Société anonyme | 62591 | Ж- 2010-746 |
| LINGUA CENTAR ZA STRANE JEZIKE Ivana Macedonič Eremić PR | 62539 | Ж- 2010-138 |
| Lovopromet doo | 62761 | Ж- 2010-1937 |
| Lovopromet doo | 62762 | Ж- 2010-1938 |
| Lovopromet doo | 62763 | Ж- 2010-1939 |
| M & G BRANDS, LIMITED | 62617 | Ж- 2010-1988 |
| MAGIC CITY D.O.O. | 62675 | Ж- 2010-1981 |

| (732) | (111) | (210) |
|---|---|---|
| Marijeta Lazor | 62594 | Ж- 2010-1902 |
| Marko Radinković PR, Ostale usluge informacione tehnologije CREATIVE GENOME | 62692 | Ж- 2010-2139 |
| Marriott Worldwide Corp., a Maryland (USA) corporation | 62666 | Ж- 2010-1963 |
| Marriott Worldwide Corp., a Maryland (USA) corporation | 62667 | Ж- 2010-1964 |
| MasterCard International Incorporated (Delaware corporation) | 62566 | Ж- 2010-1838 |
| McDonald‘s International Property Company, Ltd. | 62768 | Ж- 2010-1318 |
| MERITAS INC. | 62767 | Ж- 2010-2069 |
| Milan Timotić | 62729 | Ж- 2010-2044 |
| Milan Timotić | 62730 | Ж- 2010-2045 |
| Milica Pešić Everblazing | 62624 | Ж- 2010-1639 |
| Milliken & Company | 62641 | Ж- 2010-2118 |
| MIŠKOVIĆ MILORAD | 62770 | Ж- 2010-2141 |
| Mlekara a.d. | 62778 | Ж- 2011-427 |
| MONTANA PLUS d.o.o. | 62771 | Ж- 2010-1579 |
| MONTANA PLUS d.o.o. | 62772 | Ж- 2010-1580 |
| MONTANA PLUS d.o.o. | 62773 | Ж- 2010-1581 |
| Motorola Trademark Holdings, LLC, Delaware limited liability company | 62704 | Ж- 2010-1763 |
| Narodna banka Srbije - Zavod za izradu novčanica i kovanog novca – Topčider | 62727 | Ж- 2010-1141 |
| NIHON NOHYAKU Co., Ltd. | 62642 | Ж- 2010-2120 |
| Nike International Ltd. a Bermuda company | 62794 | Ж- 2011-48 |
| Nikola Varagić and Dušan Kovačević | 62792 | Ж- 2010-230 |
| Nine West Development Corporation | 62582 | Ж- 2010-1880 |
| Novak Đoković | 62609 | Ж- 2010-2124 |
| Novak Đoković | 62610 | Ж- 2010-2125 |

| (732) | (111) | (210) |
|---|---|---|
| Novak Đoković | 62611 | Ж- 2010-2126 |
| Novak Mršević | 62698 | Ж- 2010-2151 |
| OLD NAVY (ITM) INC. | 62673 | Ж- 2010-1861 |
| OPPO MEDICAL INC. | 62584 | Ж- 2010-1637 |
| PharmaSwiss d.o.o. | 62714 | Ж- 2011-612 |
| PHIWA DOO | 62515 | Ж- 2010-1905 |
| PINAR SUT MAMULLERI SANAYI ANONIM SIRKETI | 62754 | Ж- 2010-1643 |
| Piramida 72, d.o.o. | 62549 | Ж- 2010-1553 |
| Planinarsko-smučarsko društvo Gvozdac | 62637 | Ж- 2010-725 |
| PMPI LLC | 62502 | Ж- 2009-1597 |
| PODRAVKA d.d. | 62547 | Ж- 2010-1462 |
| POLYSEAL, d.o.o. Privredno društvo za proizvodnju zaptivnih elemenata | 62575 | Ж- 2010-1857 |
| Popović Milan | 62661 | Ж- 2010-1438 |
| POWER SYMBOL TECHNOLOGY D.O.O. BEOGRAD, MILUTINA MILANKOVIĆA 11 B | 62665 | Ж- 2009-1600 |
| Preduzeće za proizvodnju i emitovanje TV programa FOX televizija doo Beograd | 62531 | Ж- 2010-1896 |
| PREDUZEĆE ZA PROIZVODNJU, PROMET I USLUGE POLIMARK DOO BEOGRAD | 62688 | Ж- 2011-586 |
| PREDUZEĆE ZA PROIZVODNJU, PROMET I USLUGE POLIMARK DOO BEOGRAD | 62715 | Ж- 2011-629 |
| Preduzeće za telekomunikacije Digi Sat doo | 62742 | Ж- 2010-592 |
| Preduzeće za telekomunikacije Digi Sat doo | 62743 | Ж- 2010-593 |
| Preduzeće za telekomunikacije Digi Sat doo | 62744 | Ж- 2010-595 |
| Preduzeće za telekomunikacije Digi Sat doo | 62745 | Ж- 2010-591 |

| (732) | (111) | (210) |
|---|---|---|
| Privredno društvo MALA KOMPANIJA d.o.o. | 62596 | Ж- 2010-693 |
| Privredno društvo ORIFLAME KOZMETIKA d.o.o. Beograd | 62791 | Ж- 2010-2160 |
| Privredno društvo Pietro Dell Oro doo | 62777 | Ж- 2010-1459 |
| Privredno društvo za proizvodnju čokolade, bombona i peciva PIONIR DOO | 62786 | Ж- 2010-1818 |
| Privredno društvo za proizvodnju čokolade, bombona i peciva PIONIR DOO | 62787 | Ж- 2010-1819 |
| Privredno društvo za proizvodnju farmaceutskih preparata LOTOS DOO | 62759 | Ж- 2010-582 |
| PRIVREDNO DRUŠTVO ZA PROIZVODNJU I USLUGE GRAND SLOT D.O.O. KRUŠEVAC | 62726 | Ж- 2010-1537 |
| Privredno društvo za proizvodnju konditorskih proizvoda i proizvoda od voća kompanija HISSAR d.o.o. | 62764 | Ж- 2010-1793 |
| Privredno društvo za proizvodnju konditorskih proizvoda proizvoda od voća kompanija HISSAR d.o.o. | 62765 | Ж- 2010-1792 |
| Privredno društvo za trgovinu, proizvodnju i usluge EURODOM DOO | 62628 | Ж- 2010-1965 |
| PROTON SYSTEM d.o.o. | 62561 | Ж- 2010-1830 |
| PTD RAZVITAK GST | 62632 | Ж- 2010-973 |
| Ramiz Hashimov Baku | 62779 | Ж- 2010-2007 |
| RECI DA DOO | 62707 | Ж- 2010-2046 |
| Reckitt Benckiser (Switzerland) AG | 62657 | Ж- 2010-1578 |
| Reckitt Benckiser (Switzerland) AG | 62757 | Ж- 2010-1379 |
| RED BULL GmbH | 62636 | Ж- 2010-2123 |
| RED BULL GmbH | 62686 | Ж- 2010-1220 |
| Research In Motion Limited | 62799 | Ж- 2010-1933 |

| (732) | (111) | (210) |
|---|---|---|
| RESERVE DOO | 62640 | Ж- 2010-1895 |
| SAMLING ELEGANT LIVING GROUP CO. LTD. | 62670 | Ж- 2010-1945 |
| SAMSUNG ELECTRONICS CO., LTD | 62587 | Ж- 2010-1929 |
| SANDYFORD HOLDINGS LIMITED | 62603 | Ж- 2010-2140 |
| SANOFI PASTEUR, Societe Anonyme | 62678 | Ж- 2010-2003 |
| SANTAIR d.o.o. | 62658 | Ж- 2010-1423 |
| SCOOTERS-MOTO MANIA D.O.O. | 62664 | Ж- 2010-870 |
| Seattle's Best Coffee LLC | 62545 | Ж- 2010-1182 |
| Skorup Darko | 62567 | Ж- 2010-1839 |
| SPECIJALISTIČKA ORDINACIJA IZ DERMATOLOGIJE DERMATIM SVETLANA ĐURIŠIĆ PREDUZETNIK | 62741 | Ж- 2010-1399 |
| Sporting Supplies International, Inc. | 62629 | Ж- 2010-2039 |
| STEELSOFT D.O.O. | 62708 | Ж- 2010-2137 |
| STEELSOFT DOO | 62602 | Ж- 2009-1498 |
| Stiefel Laboratories, Inc. Corporation Service Company | 62532 | Ж- 2011-184 |
| SZR SIGRAF Plus d.o.o. | 62541 | Ж- 2010-468 |
| SZR ZRNCO OMASTA JANO PR KOVAČICA | 62574 | Ж- 2010-1855 |
| SZTR IMPACTO, Preduzetnik Tijana Živko | 62507 | Ж- 2010-860 |
| TDR d.o.o. | 62619 | Ж- 2010-2011 |
| TDR d.o.o. | 62620 | Ж- 2010-2012 |
| TDR d.o.o. | 62621 | Ж- 2010-2013 |
| TDR d.o.o. | 62622 | Ж- 2010-2014 |
| Tehno-al Marinković d.o.o. | 62785 | Ж- 2010-1734 |
| Tehno-al Marinković d.o.o. | 62788 | Ж- 2010-1735 |
| The Coca Cola Company | 62563 | Ж- 2010-1834 |

| (732) | (111) | (210) |
|---|---|---|
| The Coca-Cola Company | 62564 | Ж- 2010-1835 |
| The Coca-Cola Company | 62565 | Ж- 2010-1837 |
| The North Face Apparel Corp. | 62553 | Ж- 2010-1703 |
| The North Face Apparel Corp. | 62554 | Ж- 2010-1705 |
| The North Face Apparel Corp. | 62555 | Ж- 2010-1708 |
| The North Face Apparel Corp. | 62683 | Ж- 2010-1692 |
| The North Face Apparel Corp. | 62720 | Ж- 2010-1706 |
| The North Face Apparel Corp. | 62721 | Ж- 2010-1704 |
| The North Face Apparel Corp. | 62722 | Ж- 2010-1702 |
| The North Face Apparel Corp. | 62723 | Ж- 2010-1707 |
| The North Face Apparel Corp. | 62724 | Ж- 2010-1701 |
| THE STRIDE RITE CORPORATION | 62513 | Ж- 2010-1898 |
| THE STRIDE RITE CORPORATION | 62514 | Ж- 2010-1899 |
| Thuraya Telecommunications Company | 62740 | Ж- 2010-1394 |
| Tomislav Kukanjac | 62713 | Ж- 2010-2113 |
| TOYOTA JIDOSHA KABUSHIKI KAISHA (also trading as TOYOTA MOTOR CORPORATION) | 62645 | Ж- 2010-2117 |
| TRADUS ALLEGRO AG | 62562 | Ж- 2010-1833 |
| TRADUS ALLEGRO AG | 62643 | Ж- 2010-137 |
| Udruženje građana Srpski sabor Dveri | 62774 | Ж- 2010-1306 |
| Udruženje građana Srpski sabor Dveri | 62775 | Ж- 2010-1307 |
| UDRUŽENJE LJUBITELJA SKIJANJA SKIBUS | 62651 | Ж- 2010-1948 |
| Udruženje lončara Zlakusa | 62751 | Ж- 2010-1940 |

| (732) | (111) | (210) |
|---|---|---|
| Udruženje nastavnika srednjih škola Dositej | 62712 | Ж- 2010-2132 |
| UNILEVER N.V. | 62598 | Ж- 2008-1679 |
| UNIVEREXPORT D.O.O. | 62518 | Ж- 2010-1768 |
| UNIVEREXPORT EXPORT-IMPORT d.o.o. | 62546 | Ж- 2010-1223 |
| Univerexport export-import d.o.o. Novi Sad | 62753 | Ж- 2010-1941 |
| UŠĆE SHOPPING CENTER D.O.O. BELGRADE | 62537 | Ж- 2009-271 |
| Ušće Tower I d.o.o. | 62536 | Ж- 2009-270 |
| V MARK DOO za proizvodnju, export-import i usluge | 62706 | Ж- 2010-2027 |
| Vino Župa A.D. | 62607 | Ж- 2011-88 |
| VODA VRNJCI a.d. | 62716 | Ж- 2010-1840 |
| VULCANO D.O.O. BEOGRAD | 62501 | Ж- 2008-394 |
| WESTIN HOTEL MANAGEMENT, L.P. | 62746 | Ж- 2010-1732 |
| Wm. WRIGLEY Jr. Company | 62701 | Ж- 2009-1476 |
| Wm. WRIGLEY Jr. Company | 62702 | Ж- 2009-1477 |
| WOLVERINE INTERNATIONAL, L.P. | 62748 | Ж- 2010-604 |
| World of Decoration doo Beograd | 62784 | Ж- 2010-1081 |
| Yoga I Jazz d.o.o. | 62556 | Ж- 2010-1771 |
| Zdrnja Saša | 62597 | Ж- 2010-1095 |
| ZENTIVA, k.s. | 62635 | Ж- 2010-2111 |
| Zlatiborsko prozorčedoo Novi Sad | 62538 | Ж- 2008-3034 |

## ИНДЕКС БРОЈЕВА ЖИГОВА

INDEX OF THE TRADEMARK NUMBERS

| (210) | (111) | (210) | (111) | (210) | (111) | (210) | (111) |
|---|---|---|---|---|---|---|---|
| Ж- 2008-394 | 62501 | Ж- 2010-870 | 62664 | Ж- 2010-1453 | 62663 | Ж- 2010-1633 | 62550 |
| Ж- 2008-1679 | 62598 | Ж- 2010-889 | 62600 | Ж- 2010-1459 | 62777 | Ж- 2010-1637 | 62584 |
| Ж- 2008-3034 | 62538 | Ж- 2010-929 | 62648 | Ж- 2010-1462 | 62547 | Ж- 2010-1639 | 62624 |
| Ж- 2009-187 | 62638 | Ж- 2010-973 | 62632 | Ж- 2010-1466 | 62739 | Ж- 2010-1643 | 62754 |
| Ж- 2009-188 | 62639 | Ж- 2010-1046 | 62589 | Ж- 2010-1468 | 62652 | Ж- 2010-1646 | 62551 |
| Ж- 2009-270 | 62536 | Ж- 2010-1050 | 62544 | Ж- 2010-1510 | 62660 | Ж- 2010-1647 | 62510 |
| Ж- 2009-271 | 62537 | Ж- 2010-1081 | 62784 | Ж- 2010-1516 | 62719 | Ж- 2010-1648 | 62750 |
| Ж- 2009-1476 | 62701 | Ж- 2010-1092 | 62780 | Ж- 2010-1518 | 62718 | Ж- 2010-1651 | 62511 |
| Ж- 2009-1477 | 62702 | Ж- 2010-1095 | 62597 | Ж- 2010-1532 | 62612 | Ж- 2010-1652 | 62758 |
| Ж- 2009-1498 | 62602 | Ж- 2010-1103 | 62516 | Ж- 2010-1537 | 62726 | Ж- 2010-1676 | 62552 |
| Ж- 2009-1597 | 62502 | Ж- 2010-1141 | 62727 | Ж- 2010-1545 | 62613 | Ж- 2010-1679 | 62691 |
| Ж- 2009-1600 | 62665 | Ж- 2010-1151 | 62725 | Ж- 2010-1546 | 62614 | Ж- 2010-1687 | 62601 |
| Ж- 2009-1872 | 62693 | Ж- 2010-1182 | 62545 | Ж- 2010-1547 | 62615 | Ж- 2010-1692 | 62683 |
| Ж- 2010-137 | 62643 | Ж- 2010-1188 | 62588 | Ж- 2010-1553 | 62549 | Ж- 2010-1693 | 62669 |
| Ж- 2010-138 | 62539 | Ж- 2010-1220 | 62686 | Ж- 2010-1575 | 62689 | Ж- 2010-1694 | 62687 |
| Ж- 2010-230 | 62792 | Ж- 2010-1223 | 62546 | Ж- 2010-1576 | 62512 | Ж- 2010-1701 | 62724 |
| Ж- 2010-271 | 62519 | Ж- 2010-1265 | 62685 | Ж- 2010-1578 | 62657 | Ж- 2010-1702 | 62722 |
| Ж- 2010-299 | 62766 | Ж- 2010-1291 | 62662 | Ж- 2010-1579 | 62771 | Ж- 2010-1703 | 62553 |
| Ж- 2010-397 | 62540 | Ж- 2010-1297 | 62752 | Ж- 2010-1580 | 62772 | Ж- 2010-1704 | 62721 |
| Ж- 2010-468 | 62541 | Ж- 2010-1298 | 62690 | Ж- 2010-1581 | 62773 | Ж- 2010-1705 | 62554 |
| Ж- 2010-502 | 62646 | Ж- 2010-1299 | 62517 | Ж- 2010-1582 | 62548 | Ж- 2010-1706 | 62720 |
| Ж- 2010-534 | 62508 | Ж- 2010-1306 | 62774 | Ж- 2010-1602 | 62524 | Ж- 2010-1707 | 62723 |
| Ж- 2010-557 | 62542 | Ж- 2010-1307 | 62775 | Ж- 2010-1603 | 62529 | Ж- 2010-1708 | 62555 |
| Ж- 2010-582 | 62759 | Ж- 2010-1318 | 62768 | Ж- 2010-1604 | 62525 | Ж- 2010-1713 | 62557 |
| Ж- 2010-591 | 62745 | Ж- 2010-1370 | 62749 | Ж- 2010-1605 | 62526 | Ж- 2010-1732 | 62746 |
| Ж- 2010-592 | 62742 | Ж- 2010-1371 | 62756 | Ж- 2010-1606 | 62527 | Ж- 2010-1734 | 62785 |
| Ж- 2010-593 | 62743 | Ж- 2010-1373 | 62755 | Ж- 2010-1607 | 62523 | Ж- 2010-1735 | 62788 |
| Ж- 2010-595 | 62744 | Ж- 2010-1379 | 62757 | Ж- 2010-1608 | 62530 | Ж- 2010-1758 | 62625 |
| Ж- 2010-604 | 62748 | Ж- 2010-1394 | 62740 | Ж- 2010-1609 | 62528 | Ж- 2010-1763 | 62704 |
| Ж- 2010-613 | 62747 | Ж- 2010-1396 | 62631 | Ж- 2010-1610 | 62522 | Ж- 2010-1768 | 62518 |
| Ж- 2010-635 | 62630 | Ж- 2010-1399 | 62741 | Ж- 2010-1611 | 62521 | Ж- 2010-1771 | 62556 |
| Ж- 2010-636 | 62700 | Ж- 2010-1421 | 62654 | Ж- 2010-1612 | 62520 | Ж- 2010-1774 | 62558 |
| Ж- 2010-693 | 62596 | Ж- 2010-1422 | 62655 | Ж- 2010-1624 | 62509 | Ж- 2010-1780 | 62559 |
| Ж- 2010-725 | 62637 | Ж- 2010-1423 | 62658 | Ж- 2010-1625 | 62503 | Ж- 2010-1784 | 62599 |
| Ж- 2010-746 | 62591 | Ж- 2010-1438 | 62661 | Ж- 2010-1629 | 62505 | Ж- 2010-1785 | 62560 |
| Ж- 2010-755 | 62543 | Ж- 2010-1449 | 62717 | Ж- 2010-1630 | 62504 | Ж- 2010-1792 | 62765 |
| Ж- 2010-860 | 62507 | Ж- 2010-1452 | 62776 | Ж- 2010-1631 | 62506 | Ж- 2010-1793 | 62764 |

| (210) | (111) | (210) | (111) | (210) | (111) | (210) | (111) |
|---|---|---|---|---|---|---|---|
| Ж- 2010-1800 | 62647 | Ж- 2010-1896 | 62531 | Ж- 2010-2006 | 62800 | Ж- 2010-2141 | 62770 |
| Ж- 2010-1801 | 62783 | Ж- 2010-1898 | 62513 | Ж- 2010-2007 | 62779 | Ж- 2010-2142 | 62604 |
| Ж- 2010-1810 | 62590 | Ж- 2010-1899 | 62514 | Ж- 2010-2010 | 62696 | Ж- 2010-2143 | 62605 |
| Ж- 2010-1817 | 62672 | Ж- 2010-1900 | 62593 | Ж- 2010-2011 | 62619 | Ж- 2010-2144 | 62634 |
| Ж- 2010-1818 | 62786 | Ж- 2010-1901 | 62595 | Ж- 2010-2012 | 62620 | Ж- 2010-2151 | 62698 |
| Ж- 2010-1819 | 62787 | Ж- 2010-1902 | 62594 | Ж- 2010-2013 | 62621 | Ж- 2010-2156 | 62709 |
| Ж- 2010-1830 | 62561 | Ж- 2010-1905 | 62515 | Ж- 2010-2014 | 62622 | Ж- 2010-2158 | 62760 |
| Ж- 2010-1833 | 62562 | Ж- 2010-1926 | 62653 | Ж- 2010-2021 | 62697 | Ж- 2010-2160 | 62791 |
| Ж- 2010-1834 | 62563 | Ж- 2010-1927 | 62659 | Ж- 2010-2027 | 62706 | Ж- 2010-2161 | 62797 |
| Ж- 2010-1835 | 62564 | Ж- 2010-1928 | 62656 | Ж- 2010-2032 | 62623 | Ж- 2010-2162 | 62699 |
| Ж- 2010-1837 | 62565 | Ж- 2010-1929 | 62587 | Ж- 2010-2036 | 62680 | Ж- 2011-34 | 62793 |
| Ж- 2010-1838 | 62566 | Ж- 2010-1933 | 62799 | Ж- 2010-2039 | 62629 | Ж- 2011-47 | 62796 |
| Ж- 2010-1839 | 62567 | Ж- 2010-1934 | 62668 | Ж- 2010-2040 | 62681 | Ж- 2011-48 | 62794 |
| Ж- 2010-1840 | 62716 | Ж- 2010-1935 | 62649 | Ж- 2010-2041 | 62682 | Ж- 2011-55 | 62795 |
| Ж- 2010-1842 | 62568 | Ж- 2010-1936 | 62650 | Ж- 2010-2043 | 62728 | Ж- 2011-57 | 62782 |
| Ж- 2010-1843 | 62569 | Ж- 2010-1937 | 62761 | Ж- 2010-2044 | 62729 | Ж- 2011-88 | 62607 |
| Ж- 2010-1844 | 62570 | Ж- 2010-1938 | 62762 | Ж- 2010-2045 | 62730 | Ж- 2011-184 | 62532 |
| Ж- 2010-1845 | 62571 | Ж- 2010-1939 | 62763 | Ж- 2010-2046 | 62707 | Ж- 2011-318 | 62535 |
| Ж- 2010-1846 | 62572 | Ж- 2010-1940 | 62751 | Ж- 2010-2047 | 62684 | Ж- 2011-340 | 62533 |
| Ж- 2010-1847 | 62573 | Ж- 2010-1941 | 62753 | Ж- 2010-2062 | 62769 | Ж- 2011-341 | 62534 |
| Ж- 2010-1855 | 62574 | Ж- 2010-1945 | 62670 | Ж- 2010-2063 | 62790 | Ж- 2011-427 | 62778 |
| Ж- 2010-1857 | 62575 | Ж- 2010-1948 | 62651 | Ж- 2010-2069 | 62767 | Ж- 2011-451 | 62671 |
| Ж- 2010-1860 | 62576 | Ж- 2010-1958 | 62738 | Ж- 2010-2098 | 62798 | Ж- 2011-469 | 62606 |
| Ж- 2010-1861 | 62673 | Ж- 2010-1959 | 62737 | Ж- 2010-2111 | 62635 | Ж- 2011-470 | 62608 |
| Ж- 2010-1862 | 62577 | Ж- 2010-1963 | 62666 | Ж- 2010-2113 | 62713 | Ж- 2011-506 | 62633 |
| Ж- 2010-1863 | 62578 | Ж- 2010-1964 | 62667 | Ж- 2010-2117 | 62645 | Ж- 2011-507 | 62644 |
| Ж- 2010-1864 | 62705 | Ж- 2010-1965 | 62628 | Ж- 2010-2118 | 62641 | Ж- 2011-562 | 62733 |
| Ж- 2010-1866 | 62627 | Ж- 2010-1979 | 62585 | Ж- 2010-2120 | 62642 | Ж- 2011-563 | 62731 |
| Ж- 2010-1867 | 62694 | Ж- 2010-1980 | 62586 | Ж- 2010-2121 | 62781 | Ж- 2011-564 | 62732 |
| Ж- 2010-1869 | 62674 | Ж- 2010-1981 | 62675 | Ж- 2010-2123 | 62636 | Ж- 2011-565 | 62736 |
| Ж- 2010-1870 | 62579 | Ж- 2010-1988 | 62617 | Ж- 2010-2124 | 62609 | Ж- 2011-566 | 62734 |
| Ж- 2010-1871 | 62581 | Ж- 2010-1989 | 62616 | Ж- 2010-2125 | 62610 | Ж- 2011-567 | 62735 |
| Ж- 2010-1878 | 62580 | Ж- 2010-1990 | 62618 | Ж- 2010-2126 | 62611 | Ж- 2011-576 | 62710 |
| Ж- 2010-1879 | 62592 | Ж- 2010-1994 | 62695 | Ж- 2010-2132 | 62712 | Ж- 2011-586 | 62688 |
| Ж- 2010-1880 | 62582 | Ж- 2010-1995 | 62676 | Ж- 2010-2134 | 62789 | Ж- 2011-608 | 62711 |
| Ж- 2010-1884 | 62626 | Ж- 2010-1997 | 62677 | Ж- 2010-2137 | 62708 | Ж- 2011-612 | 62714 |
| Ж- 2010-1890 | 62583 | Ж- 2010-2003 | 62678 | Ж- 2010-2139 | 62692 | Ж- 2011-621 | 62703 |
| Ж- 2010-1895 | 62640 | Ж- 2010-2004 | 62679 | Ж- 2010-2140 | 62603 | Ж- 2011-629 | 62715 |

## ИНДЕКС ПО КЛАСАМА НИЧАНСКЕ КЛАСИФИКАЦИЈЕ РОБА И УСЛУГА

INDEX ACCORDING TO THE NICE CLASSIFICATION OF GOODS AND SERVICES

**Класа: 1**

62604
62605
62613
62614
62615
62642
62648
62686
62690
62769

**Класа: 2**

62641
62681
62682
62686
62727

**Класа: 3**

62508
62517
62549
62561
62563
62564
62565
62598
62601
62609
62610
62611
62624
62634
62638
62639
62646
62654
62655
62657
62675
62677
62686
62689
62693
62696
62753
62756
62757
62789

**Класа: 4**

62512
62592
62623
62657
62686
62698
62757
62769

**Класа: 5**

62508
62520
62521
62522
62523
62524
62525
62526
62527
62528
62529
62530
62532
62533
62534
62535
62558
62561
62563
62564
62565
62574
62589
62596
62601
62604
62616
62618
62625
62633
62635
62642
62644
62648
62657
62658
62671
62675
62678
62686
62697
62700
62703
62710
62711
62714
62728
62731
62732
62733
62734
62735
62736
62747
62756
62757
62760
62789
62796

**Класа: 6**

62548
62686
62691
62785
62788

**Класа: 7**

62686
62783

**Класа: 8**

62686

**Класа: 9**

62510
62511
62543
62557
62562
62587
62632
62643
62654
62655
62668
62686
62692
62693
62704
62726
62727
62740
62742
62743
62744
62745
62750
62758
62783
62792
62799

**Класа: 10**

62584
62601
62679
62686

**Класа: 11**

62517
62563
62564
62565
62602
62657
62686
62708
62757
62759
62769

**Класа: 12**

62645
62652
62686
62755
62783

**Класа: 13**

62629
62686

**Класа: 14**

62502
62543
62563
62564
62565
62580
62588
62591
62654
62655
62686
62693

**Класа: 15**

62686

**Класа: 16**

62502
62503
62504
62505
62506
62509
62540
62541
62542
62545
62546
62549
62552
62563
62564
62565
62580
62588
62590
62593
62609
62610
62611
62612
62613
62614
62615
62631
62661
62662
62668
62686
62698
62699
62725
62727
62737
62738
62740
62749
62752
62753
62756
62766
62774
62775
62781
62790

**Класа: 17**

62575
62686
62759

**Класа: 18**

62502
62553
62563
62564
62565
62580
62588
62609
62610
62611
62624
62653
62654
62655
62656
62659
62686
62693
62720
62721
62722
62723
62724
62739

**Класа: 19**

62628
62670
62686
62759
62785
62788

**Класа: 20**

62553
62580
62588
62628
62652
62681
62682
62686
62720
62721
62722
62723
62724
62784

**Класа: 21**

62545
62563
62564
62565
62580
62583
62588
62628
62638
62639
62686
62749
62751
62756

**Класа: 22**

62553
62686
62720
62721
62722
62723
62724

**Класа: 23**

62686

**Класа: 24**

62681
62682
62686
62739
62784

**Класа: 25**

62502
62507
62513
62514
62553
62563
62564
62565
62580
62588
62595
62603
62609
62610
62611
62624
62626
62638
62639
62653
62654
62655
62656
62659
62673
62693
62720
62721

62722
62723
62724
62739
62748
62794

**Класа: 26**

62580
62588
62686

**Класа: 27**

62681
62682
62686

**Класа: 28**

62502
62545
62563
62564
62565
62584
62603
62609
62610
62611
62652
62653
62656
62659

**Класа: 29**

62518
62544
62546
62547
62577
62578
62586
62630
62638
62639
62647
62669
62686
62687
62716
62725
62728
62729
62730
62753
62754
62761
62762
62763
62770
62778
62779

**Класа: 30**

62508
62518
62519
62540
62544
62546
62547
62551
62559
62560
62568
62572
62573
62574
62577
62578
62585
62599
62604
62609
62610
62611
62627
62649
62650
62663
62672
62684
62685
62686
62688
62701
62702
62715
62716
62717
62725
62753
62754
62764
62765
62768
62770
62771
62772
62773
62779
62786
62787

**Класа: 31**

62546
62574
62577
62578
62603
62630
62686
62709
62728
62753
62770

**Класа: 32**

62516
62542
62550
62597
62606
62607
62608
62636
62676
62695
62705
62716
62753
62754
62770
62771
62772
62773
62776
62797

**Класа: 33**

62546
62580
62588
62617
62686
62753
62770

**Класа: 34**

62518
62569
62570
62571
62580
62588
62619
62620
62621
62622
62640
62660
62686
62780
62793
62795
62798

**Класа: 35**

62502
62503
62504
62505
62506
62509
62510
62511
62512
62531
62536
62537
62542
62545
62553
62554
62555
62567
62575
62582
62590
62592
62593
62609
62610
62611
62612
62619
62620
62621
62622
62638
62639
62643
62651
62654
62655
62661
62662
62664
62668
62680
62683
62686
62689
62692
62693
62694
62698
62699
62706
62707
62719
62737
62738
62750
62752
62758
62766
62779
62782
62784
62790

**Класа: 36**

62562
62566
62579
62592
62666
62667
62668
62674
62686
62766

**Класа: 37**

62510
62511
62592
62686
62689
62742
62743
62744
62745
62750
62758

**Класа: 38**

62531
62567
62600
62643
62686
62712
62737
62738
62740
62742
62743
62744
62745
62790
62792
62799

**Класа: 39**

62567
62592
62596
62651
62686

**Класа: 40**

62512
62592
62680
62686
62751
62785
62788

**Класа: 41**

62503
62504
62505
62506
62509
62531
62538
62539
62542
62552
62563
62564
62565
62590
62593
62594
62600
62609
62610
62611
62612
62631
62637
62651
62661
62662
62692
62699
62707
62712
62713
62726
62737
62738
62751
62781
62782
62790
62791

**Класа: 42**

62562
62575
62592
62631
62665
62680
62686
62692
62712
62726
62752
62792
62799

**Класа: 43**

62515
62538
62551
62552
62556
62576
62581
62594
62609
62610
62611
62649
62650
62651
62666
62667
62668
62706
62718
62746
62777

**Класа: 44**

62508
62594
62638
62639
62675
62686
62741

**Класа: 45**

62562
62686
62706
62712
62767

ОБЈАВА УПИСАНИХ ПРОМЕНА РЕГИСТРОВАНИХ ЖИГОВА ОД 06.06. 2011. ДО 05.08.2011. ГОДИНЕ

**Publications of Entered Changes of Registered Trademarks from June 6th, 2011 to August 5th, 2011**

1. **Промена имена и адресе**

Име и/или адреса носиоца жига рег.број **18623** промењена је у WHIRLPOOL PROPERTIES, INC. 500 RENAISSANCE DRIVE, SUITE 101, SAINT JOSEPH, MICHIGAN 49085, US

Име и/или адреса носиоца жига рег.број **18898** промењена је у KORPORACIJA FABRIKA, AUTOMOBILA PRIBOJ, AKCIONARSKO DRUŠTVO PRIBOJ - U RESTRUKTURIRANJU, PRIBOJ NA LIMU, RS

Име и/или адреса носиоца жига рег.број **18899** промењена је у KORPORACIJA FABRIKA AUTOMOBILA PRIBOJ, AKCIONARSKO DRUŠTVO PRIBOJ - U RESTRUKTURIRANJU, PRIBOJ NA LIMU, RS

Име и/или адреса носиоца жига рег.број **18900** промењена је у KORPORACIJA FABRIKA AUTOMOBILA PRIBOJ, AKCIONARSKO DRUŠTVO PRIBOJ - U RESTRUKTURIRANJU, PRIBOJ NA LIMU, RS

Име и/или адреса носиоца жига рег.број **18999** промењена је у ALLIED DOMECQ SPIRITS & WINE LIMITED, Chivas House, 72 Chancellors Road, London W6 , GB

Име и/или адреса носиоца жига рег.број **19738** промењена је у OTICON A/S, Kongebakken 9, DK-2765 Smørum, DK

Име и/или адреса носиоца жига рег.број **25777** промењена је у Chubb International Holdings Limited, Chubb House, Staines Road West, Sunbury-on-Thames, Middlesex TW16 7AR, UK

Име и/или адреса носиоца жига рег.број **32685** промењена је у THE GIDEONS INTERNATIONAL, 50 Century Boulevard, Nashville, Tennessee 37214, US

Име и/или адреса носиоца жига рег.број **34784** промењена је у SCHOLL CONSUMER PRODUCTS LIMITED, 103-105 Bath Road, Slough, SL1 3UH, GB

Име и/или адреса носиоца жига рег.број **36457** промењена је у WHIRLPOOL PROPERTIES, INC.500 RENAISSANCE DRIVE, SUITE 101, SAINT JOSEPH, MICHIGAN 49085, US

Име и/или адреса носиоца жига рег.број **36458** промењена је у WHIRLPOOL PROPERTIES, INC. 500 RENAISSANCE DRIVE, SUITE 101, SAINT JOSEPH, MICHIGAN 49085, US

Име и/или адреса носиоца жига рег.број **37301** промењена је у MISS WORLD LIMITED, Pier Road, St. Helier, Jersey, GB

Име и/или адреса носиоца жига рег.број **37611** промењена је у Hemofarm Koncern „Zorka-Pharma“ a.d. Šabac, Hajduk Veljkova b.b., Šabac, RS

Име и/или адреса носиоца жига рег.број **37611** промењена је у Društvo sa ograničenom odgovornošću za proizvodnju farmaceutskih proizvoda HEMOFARM ŠABAC, Hajduk Veljkova b.b., Šabac, RS

Име и/или адреса носиоца жига рег.број **38139** промењена је у Agilent Technologies, Inc. 5301 Stevens Creek Boulevard, Santa Clara, California 95051, US

Име и/или адреса носиоца жига рег.број **38140** промењена је у SAO PAULO ALPARGATAS S/A, Rua Funchal, 160, Vila Olimpia, 04551-903 Sao Paulo, SP, BR

Име и/или адреса носиоца жига рег.број **38193** промењена је у INVESTCORP S.A., Offices of Paget-Brown Trust Company Ltd., Boundary Hall, Cricket Square, P.O. Box 1111, Grand Cayman KY-1102, KY

Име и/или адреса носиоца жига рег.број **40384** промењена је у Društvo sa ograničenom odgovornošću za proizvodnju boja i lakova "ZORKA COLOR" Šabac, Hajduk Veljkova bb, Šabac, RS

Име и/или адреса носиоца жига рег.број **40385** промењена је у Društvo sa ograničenom odgovornošću za proizvodnju boja i lakova "ZORKA COLOR" Šabac, Hajduk Veljkova bb, Šabac, RS

Име и/или адреса носиоца жига рег.број **40386** промењена је у Društvo sa ograničenom odgovornošću za proizvodnju boja i lakova "ZORKA COLOR" Šabac, Hajduk Veljkova bb, Šabac, RS

Име и/или адреса носиоца жига рег.број **40387** промењена је у Društvo sa ograničenom odgovornošću za proizvodnju boja i lakova "ZORKA COLOR" Šabac, Šabac, Hajduk Veljkova bb, RS

Име и/или адреса носиоца жига рег.број **40388** промењена је у Društvo sa ograničenom odgovornošću za proizvodnju boja i lakova "ZORKA COLOR" Šabac, Šabac,Hajduk Veljkova bb, RS

Име и/или адреса носиоца жига рег.број **40793** промењена је у Društvo sa ograničenom odgovornošću za proizvodnju boja i lakova "ZORKA COLOR" Šabac, Hajduk Veljkova bb, Šabac, RS

Име и/или адреса носиоца жига рег.број **40803** промењена је у Društvo sa ograničenom odgovornošću za proizvodnju boja i lakova "ZORKA COLOR" Šabac, Šabac, Hajduk Veljkova bb, RS

Име и/или адреса носиоца жига рег.број **40843** промењена је у Društvo sa ograničenom odgovornošću za proizvodnju boja i lakova "ZORKA COLOR" Šabac, Šabac,Hajduk Veljkova bb, RS

Име и/или адреса носиоца жига рег.број **40844** промењена је у Društvo sa ograničenom odgovornošću za proizvodnju boja i lakova "ZORKA COLOR" Šabac, Hajduk Veljkova bb, Šabac, RS

Име и/или адреса носиоца жига рег.број **41083** промењена је у Društvo sa ograničenom odgovornošću za proizvodnju boja i lakova "ZORKA COLOR" Šabac, Šabac, Hajduk Veljkova bb, RS

Име и/или адреса носиоца жига рег.број **41084** промењена је у Društvo sa ograničenom odgovornošću za proizvodnju boja i lakova "ZORKA COLOR" Šabac, Šabac, Hajduk Veljkova bb, RS

Име и/или адреса носиоца жига рег.број **41085** промењена је у Društvo sa ograničenom odgovornošću za proizvodnju boja i lakova "ZORKA COLOR" Šabac, Šabac, Hajduk Veljkova bb, RS

Име и/или адреса носиоца жига рег.број **41178** промењена је у The Concentrate Manufacturing Company of Ireland (Seven-Up International), Corner House, 20 Parlliament Street, Hamilton, BM

Име и/или адреса носиоца жига рег.број **41197** промењена је у БИСЕР АД, Кумане, Змај Јовина бб, RS

Име и/или адреса носиоца жига рег.број **41285** промењена је у Knauf Insulation d.o.o. industrija termicnih izolacij, Škofja Loka, Trata 32, SI

Име и/или адреса носиоца жига рег.број **41519** промењена је у Društvo sa ograničenom odgovornošću za proizvodnju boja i lakova "ZORKA COLOR" Šabac, Hajduk Veljkova bb, Šabac, RS

Име и/или адреса носиоца жига рег.број **44200** промењена је у DIAGEO PLC, Lakeside Drive, Park Royal, London, NW10 7HQ, UK

Име и/ли адреса носиоца жига рег.број **44423** промењена је у GLOBERIDE, Inc. 14-16, Maesawa 3-chome, Higashikurume-City, Tokyo,, JP

Име и/или адреса носиоца жига рег.број **45773** промењена је у SSL PRODUCTS LIMITED, 103-105 Bath Road, Slough, SL1 3UH, GB

Име и/или адреса носиоца жига рег.број **46822** промењена је у Intervet Inc., 556 Morris Avenue, Summit, New Jersey 07901, US

Име и/или адреса носиоца жига рег.број **46842** промењена је у Bayer CropScience SA, 16, rue Jean-Marie Leclair, 69009 Lyon, FR

Име и/или адреса носиоца жига рег.број **46921** промењена је у Koncern za proizvodnju i promet konditorskih proizvoda "BAMBI-BANAT" AD, Beograd, Bul. Mihaila Pupina 115G, RS

Име и/или адреса носиоца жига рег.број **47029** промењена је у BOREALIS A/S
c/o Gorrissen Federspiel. H.S. Andersens Boulevard 12, 1553 Kobenhavn V, DK

Име и/или адреса носиоца жига рег.број **47030** промењена је у BOREALIS A/S, c/o Gorrissen Federspiel. H.S. Andersens Boulevard 12, 1553 Kobenhavn V, DK

Име и/или адреса носиоца жига рег.број **47100** промењена је у Wyeth LLC, Five Giralda Farms, Madison, New Jersey 07940, US

Име и/или адреса носиоца жига рег.број **47256** промењена је у SSL Products Limited, 103-105 Bath Road, Slough, SL1 3UH, GB

Име и/или адреса носиоца жига рег.број **47270** промењена је у SSL Products Limited, 103-105 Bath Road, Slough, SL1 3UH, GB

Име и/или адреса носиоца жига рег.број **47271** промењена је у SSL Products Limited, 103-105 Bath Road, Slough, SL1 3UH, GB

Име и/или адреса носиоца жига рег.број **47291** промењена је у N.E.T. Co. United S.A., P.O. Box 957, Offshore Incorporations Centre, Road Town, Tortola, British Virgin Island, VG

Име и/или адреса носиоца жига рег.број **47403** промењена је у Koncern za proizvodnju i promet konditorskih proizvoda "BAMBI-BANAT" AD, Beograd, Bul. Mihaila Pupina 115G, RS

Име и/или адреса носиоца жига рег.број **47422** промењена је у DIAGEO PLC, Lakeside Drive, Park Royal, London, NW10 7HQ, UK

Име и/или адреса носиоца жига рег.број **47423** промењена је у DIAGEO PLC., Lakeside Drive, Park Royal, London, NW10 7HQ, UK

Име и/или адреса носиоца жига рег.број **47424** промењена је у SSL Products Limited, 103-105 Bath Road, Slough, SL1 3UH, GB

Име и/или адреса носиоца жига рег.број **47524** промењена је у Koncern za proizvodnju i promet konditorskih proizvoda "BAMBI-BANAT" AD, Beograd, Bul. Mihaila Pupina 115G, RS

Име и/или адреса носиоца жига рег.број **47525** промењена је у Koncern za proizvodnju i promet konditorskih proizvoda "BAMBI-BANAT" AD, Beograd, Bul. Mihaila Pupina 115G, RS

Име и/или адреса носиоца жига рег.број **47549** промењена је у Koncern za proizvodnju i promet konditorskih proizvoda "BAMBI-BANAT" AD, Beograd, Bul. Mihaila Pupina 115G, RS

Име и/или адреса носиоца жига рег.број **47678** промењена је у Privredno društvo za proizvodnju i prodaju deterdženata "BEOHEMIJA-INHEM" DOO, Pančevačka 84, Zrenjanin, RS

Име и/или адреса носиоца жига рег.број **48086** промењена је у Georgia-Pacific Hellas S.A. 81 Ifigenias str, 142 31 N. Ionia, GR

Име и/или адреса носиоца жига рег.број **49369** промењена је у N.E.T. Co. United S.A., P.O. Box 957, Offshore Incorporations Centre, Road Town, Tortola, British Virgin Island, VG

Име и/или адреса носиоца жига рег.број **49457** промењена је у HYUNDAI CORPORATION, # 140-2, Gye-Dong, Jongno-gu, Seoul, KR

Име и/или адреса носиоца жига рег.број **50460** промењена је у Društvo sa ograničenom odgovornošću za proizvodnju boja i lakova "ZORKA COLOR" Šabac, Hajduk Veljkova bb, Šabac, RS

Име и/или адреса носиоца жига рег.број **50461** промењена је у Društvo sa ograničenom odgovornošću za proizvodnju boja i lakova "ZORKA COLOR" Šabac, Hajduk Veljkova bb, Šabac, RS

Име и/или адреса носиоца жига рег.број **50462** промењена је у Društvo sa ograničenom odgovornošću za proizvodnju boja i lakova "ZORKA COLOR" Šabac, Hajduk Veljkova bb, Šabac, RS

Име и/или адреса носиоца жига рег.број **50463** промењена је у Društvo sa ograničenom odgovornošću za proizvodnju boja i lakova "ZORKA COLOR" Šabac, Hajduk Veljkova bb, Šabac, RS

Име и/или адреса носиоца жига рег.број **51090** промењена је у Bonatti, d.o.o Bulevar Vojvode Mišića 41,11000 Beograd, RS

Име и/или адреса носиоца жига рег.број **51535** промењена је у Društvo sa ograničenom odgovornošću za proizvodnju boja i lakova "ZORKA COLOR" Šabac, Hajduk Veljkova bb, Šabac, RS

Име и/или адреса носиоца жига рег.број **51756** промењена је у Društvo sa ograničenom odgovornošću za proizvodnju boja i lakova "ZORKA COLOR" Šabac,Hajduk Veljkova bb, Šabac, RS

Име и/или адреса носиоца жига рег.број **53190** промењена је у HYUNDAI CORPORATION# 140-2, Gye-Dong, Jongno-gu, Seoul, KR

Име и/или адреса носиоца жига рег.број **54578** промењена је у Društvo sa ograničenom odgovornošću za proizvodnju boja i lakova "ZORKA COLOR" Šabac, Hajduk Veljkova bb, Šabac, RS

Име и/или адреса носиоца жига рег.број **54664** промењена је у Društvo sa ograničenom odgovornošću za proizvodnju boja i lakova "ZORKA COLOR" Šabac, Hajduk Veljkova bb, Šabac, RS

Име и/или адреса носиоца жига рег.број **54679** промењена је у Društvo sa ograničenom odgovornošću za proizvodnju boja i lakova "ZORKA COLOR" Šabac, Hajduk Veljkova bb, Šabac, RS

Име и/или адреса носиоца жига рег.број **54680** промењена је у Društvo sa ograničenom odgovornošću za proizvodnju boja i lakova "ZORKA COLOR" Šabac, Hajduk Veljkova bb, Šabac, RS

Име и/или адреса носиоца жига рег.број **54681** промењена је у Društvo sa ograničenom odgovornošću za proizvodnju boja i lakova "ZORKA COLOR" Šabac, Hajduk Veljkova bb, Šabac, RS

Име и/или адреса носиоца жига рег.број **54731** промењена је у Bonatti, d.o.o Bulevar Vojvode Mišića 41,11000 Beograd, RS

Име и/или адреса носиоца жига рег.број **55215** промењена је у Društvo sa ograničenom odgovornošću za proizvodnju boja i lakova "ZORKA COLOR" Šabac, Hajduk Veljkova bb, Šabac, RS

Име и/или адреса носиоца жига рег.број **55685** промењена је у Društvo sa ograničenom odgovornošću za proizvodnju boja i lakova "ZORKA COLOR" ŠabacHajduk Veljkova bb, Šabac, RS

Име и/или адреса носиоца жига рег.број **55936** промењена је у Društvo sa ograničenom odgovornošću za proizvodnju boja i lakova "ZORKA COLOR" Šabac, Hajduk Veljkova bb, Šabac, RS

Име и/или адреса носиоца жига рег.број **55957** промењена је у Bonatti, d.o.o Bulevar Vojvode Mišića 41,11000 Beograd, RS

Име и/или адреса носиоца жига рег.број **56114** промењена је у Privredno društvo za proizvodnju i prodaju deterdženata "BEOHEMIJA-INHEM" DOO, Pančevačka 84, Zrenjanin, RS

Име и/или адреса носиоца жига рег.број **56414** промењена је у Privredno društvo za proizvodnju i prodaju deterdženata "BEOHEMIJA-INHEM" DOO, Pančevačka 84, Zrenjanin, RS

Име и/или адреса носиоца жига рег.број **56428** промењена је у Društvo sa ograničenom odgovornošću za proizvodnju boja i lakova "ZORKA COLOR" Šabac, Hajduk Veljkova bb, Šabac, RS

Име и/или адреса носиоца жига рег.број **57787** промењена је у Mark Harrison Preduzetnik, Agencija za konsalting i menadžment poslove Harrisons, Novi Beograd, Bulevar Mihajla Pupina 6, RS

Име и/или адреса носиоца жига рег.број **57815** промењена је у Fairmont Hotels & Resorts International PLtd., a Hungarian corporation, Ady Endre u. 15., 2724 Ujlengyel, HU

Име и/или адреса носиоца жига рег.број **57816** промењена је у Fairmont Hotels & Resorts International PLtd., a Hungarian corporation, Ady Endre u. 15., 2724 Ujlengyel, HU

Име и/или адреса носиоца жига рег.број **57817** промењена је у Fairmont Hotels & Resorts International PLtd., a Hungarian corporation, Ady Endre u. 15., 2724 Ujlengyel, HU

Име и/или адреса носиоца жига рег.број **57819** промењена је у Fairmont Hotels & Resorts International PLtd., a Hungarian corporation, Ady Endre u. 15., 2724 Ujlengyel, HU

Име и/или адреса носиоца жига рег.број **57823** промењена је у Bonatti, d.o.o Bulevar Vojvode Mišića 41, 11000 Beograd, RS

Име и/или адреса носиоца жига рег.број **58429** промењена је у Business Press d.o.o., Kralja Vladimira 51/2, 11010 Beograd, RS

Име и/или адреса носиоца жига рег.број **59005** промењена је у Business Press d.o.o., Kralja Vladimira 51/2, 11010 Beograd, RS

Име и/или адреса носиоца жига рег.број **60498** промењена је у Business Press d.o.o. Kralja Vladimira 51/2, 11010 Beograd, RS

Име и/или адреса носиоца жига рег.број **60776** промењена је у Društvo sa ograničenom odgovornošću za proizvodnju boja i lakova "ZORKA COLOR" Šabac, ul. Hajduk Veljkova b.b. Šabac, RS

Име и/или адреса носиоца жига рег.број **61487** промењена је у Bonatti, d.o.o Bulevar Vojvode Mišića 41, 11000 Beograd, RS

## 2. Пренос права

За жиг бр. **16977** извршен је пренос на JT International SA, 1, Rue de la Gabelle, 1211 Geneva 26, CH

За жиг бр. **17755** извршен је пренос на Reckitt & Colman (Overseas) Limited, Dansom Lane, Hull, HU8 7DS, UK

За жиг бр. **18734** извршен је пренос на JT International SA , 1, Rue de la Gabelle, 1211 Geneva 26, CH

За жиг бр. **18735** извршен је пренос на JT International SA, 1, Rue de la Gabelle, 1211 Geneva 26, CH

За жиг бр. **19688** извршен је пренос на CARGOTEC PATENTER AB, c/o Kalmar Industries AB, 34181 Ljungby, SE

За жиг бр. **21110** извршен је пренос на JT International SA, 1, Rue de la Gabelle, 1211 Geneva 26, CH

За жиг бр. **21117** извршен је пренос на JT International SA, 1, Rue de la Gabelle, 1211 Geneva 26, CH

За жиг бр. **25223** извршен је пренос на JT International SA , 1, Rue de la Gabelle, 1211 Geneva 26, CH

За жиг бр. **25427** извршен је пренос на AK STELL CORPORATION, 703 Curtis Street Middletown, Ohio 45043, US

За жиг бр. **25724** извршен је пренос на "PENPHARM" DOO ZRENJANIN,Manastirska 7, Zrenjanin, RS

За жиг бр. **26545** извршен је пренос на JT International SA , 1, Rue de la Gabelle, 1211 Geneva 26, CH

За жиг бр. **29349** извршен је пренос на JT International SA, 1, Rue de la Gabelle, 1211 Geneva 26, CH

За жиг бр. **32506** извршен је пренос на JT International SA, 1, Rue de la Gabelle, 1211 Geneva 26, CH

За жиг бр. **34457** извршен је пренос на JT International SA, 1, Rue de la Gabelle, 1211 Geneva 26, CH

За жиг бр. **37832** извршен је пренос на Perry Ellis International Inc.,3000 NW 107th Avenue, Miami, FL, US

За жиг бр. **37969** извршен је пренос на JT International SA, 1, Rue de la Gabelle, 1211 Geneva 26, CH

За жиг бр. **39362** извршен је пренос на JT International SA, 1, Rue de la Gabelle, 1211 Geneva 26, CH

За жиг бр. **39547** извршен је пренос на PHIVCO UK II LIMITED,980 Great West Road, Brentford, Middlesex TW8 9GS, England, UK

За жиг бр. **39658** извршен је пренос на JT International SA, 1, Rue de la Gabelle, 1211 Geneva 26, CH

За жиг бр. **39816** извршен је пренос на JT International SA, 1, Rue de la Gabelle, 1211 Geneva 26, CH

За жиг бр**. 40347** извршен је пренос на Reckitt & Colman (Overseas) Limited,Dansom Lane, Hull, HU8 7DS, UK

За жиг бр. **40556** извршен је пренос на Centro-fantastico d.o.o. Beograd,Maršala Tolbuhina br. 155, Beograd, RS

За жиг бр. **40557** извршен је пренос на Centro-fantastico d.o.o. Beograd,Maršala Tolbuhina br. 155, Beograd, RS

За жиг бр. **40558** извршен је пренос на Centro-fantastico d.o.o. Beograd,Maršala Tolbuhina br. 155, Beograd, RS

За жиг бр. **40559** извршен је пренос на Centro-fantastico d.o.o. Beograd,Maršala Tolbuhina br. 155, Beograd, RS

За жиг бр. **40560** извршен је пренос на Centro-fantastico d.o.o. Beograd,Maršala Tolbuhina br. 155, Beograd, RS

За жиг бр. **40561** извршен је пренос на Centro-fantastico d.o.o. Beograd,Maršala Tolbuhina br. 155, Beograd, RS

За жиг бр. **40562** извршен је пренос на Centro-fantastico d.o.o. Beograd,Maršala Tolbuhina br. 155, Beograd, RS

За жиг бр. **40563** извршен је пренос на Centro-fantastico d.o.o. Beograd,Maršala Tolbuhina br. 155, Beograd, RS

За жиг бр. **40564** извршен је пренос на Centro-fantastico d.o.o. Beograd,Maršala Tolbuhina br. 155, Beograd, RS;

За жиг бр. **40565** извршен је пренос на Centro-fantastico d.o.o. Beograd,Maršala Tolbuhina br. 155, Beograd, RS

За жиг бр. **40566** извршен је пренос на Centro-fantastico d.o.o. Beograd,Maršala Tolbuhina br. 155, Beograd, RS

За жиг бр. **40567** извршен је пренос на Centro-fantastico d.o.o. Beograd,Maršala Tolbuhina br. 155, Beograd, RS

За жиг бр. **40568** извршен је пренос на Centro-fantastico d.o.o. Beograd,Maršala Tolbuhina br. 155, Beograd, RS

За жиг бр. **40569** извршен је пренос на Centro-fantastico d.o.o. Beograd,Maršala Tolbuhina br. 155, Beograd, RS

За жиг бр. **40570** извршен је пренос на Centro-fantastico d.o.o. Beograd,Maršala Tolbuhina br. 155, Beograd, RS

За жиг бр. **40571** извршен је пренос на Centro-fantastico d.o.o. Beograd,Maršala Tolbuhina br. 155, Beograd, RS

За жиг бр. **40572** извршен је пренос на Centro-fantastico d.o.o. Beograd,Maršala Tolbuhina br. 155, Beograd, RS

За жиг бр. **40573** извршен је пренос на Centro-fantastico d.o.o. Beograd,Maršala Tolbuhina br. 155, Beograd, RS

За жиг бр. **40574** извршен је пренос на Centro-fantastico d.o.o. Beograd,Maršala Tolbuhina br. 155, Beograd, RS

За жиг бр. **40582** извршен је пренос на Centro-fantastico d.o.o. Beograd,Maršala Tolbuhina br. 155, Beograd, RS

За жиг бр. **41311** извршен је пренос на Fenwal, Inc.,Three Corporate Drive, Lake Zurich, Illinois 60047, US

За жиг бр. **42333** извршен је пренос на Juvena Marlies Möller AG,Industriestrasse 8, 8604 Volketswil, CH

За жиг бр. **42846** извршен је пренос на TRW Intellectual Property Corp.,12025 Tech Center Drive, Livonia, Michigan 48150, US

За жиг бр. **44033** извршен је пренос на SOPHARMA AD,16 Iliensko chaussee str., 1220 Sofia, BG

За жиг бр. **46796** извршен је пренос на JT International SA,1, Rue de la Gabelle, 1211 Geneva 26, CH

За жиг бр. **46797** извршен је пренос на JT International SA , 1, Rue de la Gabelle, 1211 Geneva 26, CH

За жиг бр. **46976** извршен је пренос на JT International SA , 1, Rue de la Gabelle, 1211 Geneva 26, CH

За жиг бр. **47061** извршен је пренос на JT International SA, 1, Rue de la Gabelle, 1211 Geneva 26, CH

За жиг бр. **47104** извршен је пренос на JD Sports Fashion Plc,Hollinsbrook Way, Pilsworth, Bury, Lancashire BL9 8RR, UK

За жиг бр. **47279** извршен је пренос на LVD Acquisition, LLC, Limited Liability Company of the State of Delaware,222 E. Campus View Blvd., Columbus, Ohio 43235, US

За жиг бр. **47509** извршен је пренос на JT International SA, 1, Rue de la Gabelle, 1211 Geneva 26, CH

За жиг бр. **47593** извршен је пренос на "PENPHARM" DOO ZRENJANIN,Manastirska 7, Zrenjanin, RS

За жиг бр. **47779** извршен је пренос на G. & G. S.r.l.,Via C.A. Pizzardi No. 50, Bologna, IT

За жиг бр. **48086** извршен је пренос на Georgia-Pacific S.A R.L., 25, route d' Esch, L-147 Luxembourg , LU

За жиг бр. **48414** извршен је пренос на JT International SA, 1, Rue de la Gabelle, 1211 Geneva 26, CH

За жиг бр. **48415** извршен је пренос на JT International SA, 1, Rue de la Gabelle, 1211 Geneva 26, CH

За жиг бр. **48416** извршен је пренос на JT International SA, 1, Rue de la Gabelle, 1211 Geneva 26, CH

За жиг бр. **48443** извршен је пренос на JT International SA, 1, Rue de la Gabelle, 1211 Geneva 26, CH

За жиг бр. **48444** извршен је пренос на JT International SA, 1, Rue de la Gabelle, 1211 Geneva 26, CH

За жиг бр. **48446** извршен је пренос на JT International SA, 1, Rue de la Gabelle, 1211 Geneva 26, CH

За жиг бр. **48447** извршен је пренос на JT International SA, 1, Rue de la Gabelle, 1211 Geneva 26, CH

За жиг бр. **48611** извршен је пренос на IQ INDIVIDUAL DOO, Novi Sad, Bulevar Cara Lazara br. 3, RS

За жиг бр. **48642** извршен је пренос на JT International SA, 1, Rue de la Gabelle, 1211 Geneva 26, CH;

За жиг бр. **48759** извршен је пренос на JT International SA, 1, Rue de la Gabelle, 1211 Geneva 26, CH

За жиг бр. **48859** извршен је пренос на JT International SA, 1, Rue de la Gabelle, 1211 Geneva 26, CH

За жиг бр. **48934** извршен је пренос на JT International SA, 1, Rue de la Gabelle, 1211 Geneva 26, CH

За жиг бр. **49124** извршен је пренос на JT International SA, 1, Rue de la Gabelle, 1211 Geneva 26, CH

За жиг бр. **49153** извршен је пренос на JT International SA ,1, Rue de la Gabelle, 1211 Geneva 26, CH

За жиг бр. **49245** извршен је пренос на JT International SA, 1, Rue de la Gabelle, 1211 Geneva 26, CH

За жиг бр. **49284** извршен је пренос на JT International SA, 1, Rue de la Gabelle, 1211 Geneva 26, CH

За жиг бр. **49706** извршен је пренос на JT International SA ,1, Rue de la Gabelle, 1211 Geneva 26, CH;

За жиг бр. **50057** извршен је пренос на Centro-fantastiko d.o.o. Beograd,Maršala Tolbuhina br. 155, Beograd, RS

За жиг бр. **50183** извршен је пренос на JT International SA, 1, Rue de la Gabelle, 1211 Geneva 26, CH

За жиг бр. **50189** извршен је пренос на JT International SA, 1, Rue de la Gabelle, 1211 Geneva 26, CH

За жиг бр. **50436** извршен је пренос на IQ INDIVIDUAL DOO, Novi Sad, Bulevar Cara Lazara br. 3, RS

За жиг бр. **50678** извршен је пренос на Centro-fantastico d.o.o. Beograd,Maršala Tolbuhina br. 155, Beograd, RS

За жиг бр. **50910** извршен је пренос на Centro-fantastico d.o.o. Beograd , Maršala Tolbuhina br. 155, Beograd, RS

За жиг бр. **50911** извршен је пренос на Centro-fantastico d.o.o. Beograd, Maršala Tolbuhina br. 155, Beograd, RS

За жиг бр. **51928** извршен је пренос на Centro-fantastico d.o.o. Beograd, Maršala Tolbuhina br. 155, Beograd, RS

За жиг бр. **51929** извршен је пренос на Centro-fantastico d.o.o. Beograd, Maršala Tolbuhina br. 155, Beograd, RS

За жиг бр. **52335** извршен је пренос на Centro-fantastico d.o.o. Beograd, Maršala Tolbuhina br. 155, Beograd, RS

За жиг бр. **52336** извршен је пренос на Centro-fantastico d.o.o. Beograd, Maršala Tolbuhina br. 155, Beograd, RS

За жиг бр. **52337** извршен је пренос на Centro-fantastico d.o.o. Beograd, Maršala Tolbuhina br. 155, Beograd, RS

За жиг бр**. 52796** извршен је пренос на Goodyear Dunlop Tyres UK Limited, Tyre Fort 88-98, Wingfoot Way, Birmingham B24 9HY, UK

За жиг бр. **52797** извршен је пренос на Goodyear Dunlop Tyres UK Limited, Tyre Fort 88-98, Wingfoot Way, Birmingham B24 9HY, UK

За жиг бр. **52927** извршен је пренос на "Zdravo Organic" d.o.o., Selenča, Klarova bb, RS

За жиг бр. **53000** извршен је пренос на Centro-fantastico d.o.o. Beograd,Maršala Tolbuhina br.155, Beograd, RS;

За жиг бр. **53001** извршен је пренос на Centro-fantastico d.o.o. Beograd,Maršala Tolbuhina br.155, Beograd, RS;

За жиг бр. **53002** извршен је пренос на Centro-fantastico d.o.o. Beograd,Maršala Tolbuhina br.155, Beograd, RS;

За жиг бр. **53003** извршен је пренос на Centro-fantastico d.o.o. Beograd,Maršala Tolbuhina br.155, Beograd, RS;

За жиг бр. **53004** извршен је пренос на Centro-fantastico d.o.o. Beograd,Maršala Tolbuhina br.155, Beograd, RS;

За жиг бр. **53005** извршен је пренос на Centro-fantastico d.o.o. Beograd,Maršala Tolbuhina br.155, Beograd, RS;

За жиг бр. **53006** извршен је пренос на Centro-fantastico d.o.o. Beograd,Maršala Tolbuhina br.155, Beograd, RS;

За жиг бр. **53007** извршен је пренос на Centro-fantastico d.o.o. Beograd,Maršala Tolbuhina br.155, Beograd, RS;

За жиг бр. **53008** извршен је пренос на Centro-fantastico d.o.o. Beograd,Maršala Tolbuhina br.155, Beograd, RS;

За жиг бр. **53009** извршен је пренос на Centro-fantastico d.o.o. Beograd,Maršala Tolbuhina br. 155, Beograd, RS;

За жиг бр. **53010** извршен је пренос на Centro-fantastico d.o.o. Beograd,Maršala Tolbuhina br. 155, Beograd, RS;

За жиг бр. **53015** извршен је пренос на Centro-fantastico d.o.o. Beograd,Maršala Tolbuhina br. 155, Beograd, RS;

За жиг бр. **53016** извршен је пренос на Centro-fantastico d.o.o. Beograd,Maršala Tolbuhina br. 155, Beograd, RS;

За жиг бр. **53017** извршен је пренос на Centro-fantastico d.o.o. Beograd,Maršala Tolbuhina br.155, Beograd, RS;

За жиг бр. **53018** извршен је пренос на Centro-fantastico d.o.o. Beograd,Maršala Tolbuhina br.155, Beograd, RS;

За жиг бр. **53019** извршен је пренос на Centro-fantastico d.o.o. Beograd,Maršala Tolbuhina br.155, Beograd, RS;

За жиг бр. **53020** извршен је пренос на Centro-fantastico d.o.o. Beograd,Maršala Tolbuhina br. 155, Beograd, RS;

За жиг бр. **53021** извршен је пренос на Centro-fantastico d.o.o. Beograd,Maršala Tolbuhina br.155, Beograd, RS;

За жиг бр. **53022** извршен је пренос на Centro-fantastico d.o.o. Beograd,Maršala Tolbuhina br.155, Beograd, RS;

За жиг бр. **53023** извршен је пренос на Centro-fantastico d.o.o. Beograd,Maršala Tolbuhina br.155, Beograd, RS

За жиг бр. **53024** извршен је пренос на Centro-fantastico d.o.o. Beograd,Maršala Tolbuhina br.155, Beograd, RS

За жиг бр. **53682** извршен је пренос на Centro-fantastico d.o.o. Beograd,Maršala Tolbuhina br. 155, Beograd, RS

За жиг бр. **53683** извршен је пренос на Centro-fantastico d.o.o. Beograd,Maršala Tolbuhina br. 155, Beograd, RS

За жиг бр. **53684** извршен је пренос на Centro-fantastiko d.o.o. Beograd,Maršala Tolbuhina br. 155, Beograd, RS

За жиг бр. **53685** извршен је пренос на Centro-fantastico d.o.o. Beograd,Maršala Tolbuhina br. 155, Beograd, RS

За жиг бр. **53712** извршен је пренос на Centro-fantastico d.o.o. Beograd,Maršala Tolbuhina br. 155, Beograd, RS

За жиг бр. **53713** извршен је пренос на Centro-fantastico d.o.o. Beograd,Maršala Tolbuhina br. 155, Beograd, RS

За жиг бр. **54003** извршен је пренос на Centro-fantastico d.o.o. Beograd,Maršala Tolbuhina br. 155, Beograd, RS

За жиг бр. **54212** извршен је пренос на Centro-fantastiko d.o.o. Beograd,Maršala Tolbuhina br.155, Beograd, RS

За жиг бр. **54277** извршен је пренос на JT International SA, 1, Rue de la Gabelle, 1211 Geneva 26, CH

За жиг бр. **54339** извршен је пренос на Centro-fantastiko d.o.o. Beograd,Maršala Tolbuhina br.155, Beograd, RS

За жиг бр. **54340** извршен је пренос на Centro-fantastico d.o.o. Beograd,Maršala Tolbuhina br. 155, Beograd, RS

За жиг бр. **54341** извршен је пренос на Centro-fantastiko d.o.o. Beograd,Maršala Tolbuhina br.155, Beograd, RS

За жиг бр. **54342** извршен је пренос на Centro-fantastico d.o.o. Beograd,Maršala Tolbuhina br. 155, Beograd, RS

За жиг бр. **54343** извршен је пренос на Centro-fantastico d.o.o. Beograd,Maršala Tolbuhina br. 155, Beograd, RS

За жиг бр. **54453** извршен је пренос на JT International SA, 1, Rue de la Gabelle, 1211 Geneva 26, CH

За жиг бр. **54472** извршен је пренос на JT International SA, 1, Rue de la Gabelle, 1211 Geneva 26, CH

За жиг бр. **54674** извршен је пренос на Centro-fantastico d.o.o. Beograd, Maršala Tolbuhina br. 155, Beograd, RS

За жиг бр. **54689** извршен је пренос на Centro-fantastico d.o.o. Beograd, Maršala Tolbuhina br. 155, Beograd, RS

За жиг бр. **54788** извршен је пренос на Centro-fantastico d.o.o. Beograd, Maršala Tolbuhina br. 155, Beograd, RS

За жиг бр. **54790** извршен је пренос на Centro-fantastiko d.o.o. Beograd, Maršala Tolbuhina br.155, Beograd, RS

За жиг бр. **54846** извршен је пренос на Centro-fantastico d.o.o. Beograd, Maršala Tolbuhina br. 155, Beograd, RS

За жиг бр. **54852** извршен је пренос на Centro-fantastico d.o.o. Beograd, Maršala Tolbuhina br. 155, Beograd, RS

За жиг бр. **54916** извршен је пренос на Centro-fantastico d.o.o. Beograd, Maršala Tolbuhina br. 155, Beograd, RS

За жиг бр. **55097** извршен је пренос на Centro-fantastiko d.o.o. Beograd, Maršala Tolbuhina br.155, Beograd, RS

За жиг бр. **55140** извршен је пренос на JT International SA , 1, Rue de la Gabelle, 1211 Geneva 26, CH

За жиг бр. **55450** извршен је пренос на JT International SA , 1, Rue de la Gabelle, 1211 Geneva 26, CH

За жиг бр. **55989** извршен је пренос на JT International SA, 1, Rue de la Gabelle, 1211 Geneva 26, CH

За жиг бр. **56870** извршен је пренос на Centro-fantastico d.o.o. Beograd,Maršala Tolbuhina br. 155, Beograd, RS

За жиг бр. **57572** извршен је пренос на Centro-fantastiko d.o.o. Beograd,Maršala Tolbuhina br. 155, Beograd, RS

За жиг бр. **57573** извршен је пренос на Centro-fantastiko d.o.o. Beograd,Maršala Tolbuhina br. 155, Beograd, RS

За жиг бр. **57666** извршен је пренос на Centro-fantastiko d.o.o. Beograd, Maršala Tolbuhina br.155, Beograd , RS

За жиг бр. **57667** извршен је пренос на Centro-fantastiko d.o.o. Beograd, Maršala Tolbuhina br.155, Beograd, RS

За жиг бр. **57668** извршен је пренос на Centro-fantastiko d.o.o. Beograd, Maršala Tolbuhina br.155, Beograd, RS

За жиг бр. **57669** извршен је пренос на Centro-fantastiko d.o.o. Beograd, Maršala Tolbuhina br.155, Beograd, RS

За жиг бр. **57670** извршен је пренос на Centro-fantastiko d.o.o. Beograd, Maršala Tolbuhina br. 155, Beograd, RS

За жиг бр. **57815** извршен је пренос на FRS Hotel Group (Lux) S.à r.l., a company organized and existing under the laws of Luxembourg,16, Avenue Pasteur, L-2310 Luxembourg, LU

За жиг бр. **57816** извршен је пренос на FRS Hotel Group (Lux) S.à r.l., a company organized and existing under the laws of Luxembourg,16, Avenue Pasteur, L-2310 Luxembourg, LU

За жиг бр. **57817** извршен је пренос на FRS Hotel Group (Lux) S.à r.l., a company organized and existing under the laws of Luxembourg,16, Avenue Pasteur, L-2310 Luxembourg, LU

За жиг бр. **57819** извршен је пренос на FRS Hotel Group (Lux) S.à r.l., a company organized and existing under the laws of Luxembourg,16, Avenue Pasteur, L-2310 Luxembourg, LU

За жиг бр. **57933** извршен је пренос на Centro-fantastico d.o.o. Beograd, Maršala Tolbuhina br. 155, Beograd, RS

За жиг бр. 58174 извршен је пренос на JT International SA, 1, Rue de la Gabelle, 1211 Geneva 26, CH

За жиг бр. **58177** извршен је пренос на ENERGOTEAM d.o.o.,Bul. Svetog cara Konstantina 80-86, 18000 Niš, RS

За жиг бр. **58429** извршен је пренос на Royal Brand Names LLC,108 West 13th Street, Wilmington, 19801, Delaware, US

За жиг бр. **58766** извршен је пренос на JT International SA , 1, Rue de la Gabelle, 1211 Geneva 26, CH;

За жиг бр. **58969** извршен је пренос на Centro-fantastico d.o.o. Beograd, Maršala Tolbuhina br. 155, Beograd, RS

За жиг бр. **58970** извршен је пренос на Centro-fantastico d.o.o. Beograd, Maršala Tolbuhina br. 155, Beograd, RS

За жиг бр. **59005** извршен је пренос на Royal Brand Names LLC,108 West 13th Street, Wilmington, 19801, Delaware, US

За жиг бр. **59068** извршен је пренос на Centro-fantastiko d.o.o. Beograd, Maršala Tolbuhina br.155, Beograd, RS

За жиг бр. **59069** извршен је пренос на Centro-fantastico d.o.o. Beograd, Maršala Tolbuhina br. 155, Beograd, RS

За жиг бр. **59070** извршен је пренос на Centro-fantastiko d.o.o. Beograd, Maršala Tolbuhina br. 155, Beograd, RS

За жиг бр. **59159** извршен је пренос на Centro-fantastiko d.o.o. Beograd, Maršala Tolbuhina br. 155, Beograd, RS

За жиг бр. **59276** извршен је пренос на Centro-fantastiko d.o.o. Beograd,Maršala Tolbuhina br. 155, Beograd, RS

За жиг бр. **59520** извршен је пренос на EG Industry, a.s.,Košická 52, 821 08 Bratislava, SK

За жиг бр. **59805** извршен је пренос на JT International SA, 1, Rue de la Gabelle, 1211 Geneva 26, CH

За жиг бр. **59947** извршен је пренос на Centro-fantastiko d.o.o. Beograd, Maršala Tolbuhina br. 155, Beograd, RS

За жиг бр. **60045** извршен је пренос на Centro-fantastiko d.o.o. Beograd,Maršala Tolbuhina br. 155, Beograd, RS

За жиг бр. **60047** извршен је пренос на Centro-fantastiko d.o.o. Beograd,Maršala Tolbuhina br. 155, Beograd, RS

За жиг бр. **60486** извршен је пренос на COFFEE FOOD DRINKS GROUP d.o.o. ,Vukasovićeva 21C, 11000 Beograd, RS

За жиг бр. **60590** извршен је пренос на COFFEE FOOD DRINKS GROUP d.o.o. ,Vukasovićeva 21C, 11000 Beograd, RS

За жиг бр. **60955** извршен је пренос на COFFEE FOOD DRINKS GROUP d.o.o. ,Vukasovićeva 21C, 11000 Beograd, RS

За жиг бр. **61147** извршен је пренос на JT International SA, 1, Rue de la Gabelle, 1211 Geneva 26, CH

За жиг бр. 61319 извршен је пренос на Centro-fantastiko d.o.o. Beograd, Maršala Tolbuhina br. 155, Beograd, RS

За жиг бр. **61321** извршен је пренос на Centro-fantastiko d.o.o. Beograd, Maršala Tolbuhina br. 155, Beograd, RS

За жиг бр. **61326** извршен је пренос на Centro-fantastiko d.o.o. Beograd, Maršala Tolbuhina br. 155, Beograd, RS

За жиг бр. **61327** извршен је пренос на Centro-fantastiko d.o.o. Beograd, Maršala Tolbuhina br.155, Beograd, RS

За жиг бр. **61328** извршен је пренос на Centro-fantastico d.o.o. Beograd, Maršala Tolbuhina br. 155, Beograd, RS

За жиг бр. **61438** извршен је пренос на Centro-fantastico d.o.o. Beograd, Maršala Tolbuhina br. 155, Beograd, RS

За жиг бр. **61530** извршен је пренос на "BOMANITE INTERNATIONAL LIMITED",26 NORTH END ROAD, LONDON, ENGLAND, NW11 7PT, UK

За жиг бр. **61606** извршен је пренос на INDUSTRIAS QUIMICAS DEL VALLES, S.A.,Av. Rafael Casanova 81, 08100 Mollet del Valles, Barcelona, ES

За жиг бр. **61607** извршен је пренос на INDUSTRIAS QUIMICAS DEL VALLES, S.A.,Av. Rafael Casanova 81, 08100 Mollet del Valles, Barcelona, ES

За жиг бр. **61660** извршен је пренос на JT International SA , 1, Rue de la Gabelle, 1211 Geneva 26, CH;

За жиг бр. **61661** извршен је пренос на JT International SA, 1, Rue de la Gabelle, 1211 Geneva 26, CH;

За жиг бр. **61872** извршен је пренос на Centro-fantastiko d.o.o. Beograd, Maršala Tolbuhina br. 155, Beograd, RS

За жиг бр. **61906** извршен је пренос на Centro-fantastiko d.o.o. Beograd, Maršala Tolbuhina br. 155, Beograd, RS

За жиг бр. **62243** извршен је пренос на Centro-fantastiko d.o.o. Beograd, Maršala Tolbuhina br. 155, Beograd, RS

За жиг бр. **62258** извршен је пренос на COFFEE FOOD DRINKS GROUP d.o.o.,Vukasovićeva 21C, 11000 Beograd, RS

За жиг бр. **62259** извршен је пренос на COFFEE FOOD DRINKS GROUP d.o.o.,Vukasovićeva 21C, 11000 Beograd, RS

За жиг бр. **62260** извршен је пренос на COFFEE FOOD DRINKS GROUP d.o.o.,Vukasovićeva 21C, 11000 Beograd, RS

За жиг бр. **62416** извршен је пренос на Centro-fantastico d.o.o. Beograd,Maršala Tolbuhina br. 155, Beograd, RS

За жиг бр. **62446** извршен је пренос на Centro-fantastico d.o.o. Beograd, Maršala Tolbuhina br. 155, Beograd, RS

За жиг бр. **62469** извршен је пренос на Centro-fantastico d.o.o. Beograd, Maršala Tolbuhina br. 155, Beograd, RS

За жиг бр. **62470** извршен је пренос на Centro-fantastico d.o.o. Beograd, Maršala Tolbuhina br. 155, Beograd, RS

За жиг бр. **62471** извршен је пренос на Centro-fantastico d.o.o. Beograd, Maršala Tolbuhina br. 155, Beograd, RS

За жиг бр. **62481** извршен је пренос на Centro-fantastico d.o.o. Beograd,Maršala Tolbuhina br. 155, Beograd, RS

За жиг бр. **62482** извршен је пренос на Centro-fantastico d.o.o. Beograd, Maršala Tolbuhina br. 155, Beograd, RS

За жиг бр. **62483** извршен је пренос на Centro-fantastico d.o.o. Beograd, Maršala Tolbuhina br. 155, Beograd, RS

За жиг бр. **62484** извршен је пренос на Centro-fantastico d.o.o. Beograd, Maršala Tolbuhina br. 155, Beograd, RS

За жиг бр. **62485** извршен је пренос на Centro-fantastico d.o.o. Beograd,Maršala Tolbuhina br. 155, Beograd, RS

### 3. Упис лиценце

За жиг бр. **41197** уписана је лиценца у корист BEVETTI DOO , Нови Сад, Улица Бајчи Жилинског број 5, RS

### 4. Упис залоге

За жиг бр. **47678** уписана је залога у корист BANCA INTESA AD BEOGRAD RC BEOGRAD, Milentija Popovića br. 7, 11000 Beograd, RS

За жиг бр. **56414** уписана је залога у корист BANCA INTESA AD BEOGRAD RC BEOGRAD, Milentija Popovića br. 7, 11000 Beograd, RS

За жиг бр. **56114** уписана је залога у корист BANCA INTESA AD BEOGRAD RC BEOGRAD, Milentija Popovića br. 7, 11000 Beograd, RS

За жиг бр. 61647 уписана је залога на EUROBANK EFG A.D. BEOGRAD („Agent obezbeđenja“), Vuka Karadžića 10, Beograd, RS

За жиг бр. **56414** уписана је залога на EUROBANK EFG A.D. BEOGRAD („Agent obezbeđenja“), Vuka Karadžića 10, Beograd, RS

За жиг бр. **47678** уписана је залога на EUROBANK EFG A.D. BEOGRAD („Agent obezbeđenja“), Vuka Karadžića 10, Beograd, RS

За жиг бр. **56114** уписана је залога на EUROBANK EFG A.D. BEOGRAD („Agent obezbeđenja“), Vuka Karadžića 10, Beograd, RS

### 5. Ограничење списка робе, односно услуга

За жиг бр. **38274** ограничен списак роба, односно услуга тако да се заштита убудуће односи за робе и услуге у класама: 7 и 12.

За жиг бр. **58596** ограничен списак роба, односно услуга тако да се заштита убудуће односи за робе и услуге у класама: 34.

За жиг бр. **60201** ограничен списак роба, односно услуга тако да се заштита убудуће односи за робе и услуге у класама: 5.

## ПРЕСТАНАК ВАЖНОСТИ РЕГИСТРОВАНИХ ЖИГОВА

**1. Због неплаћања таксе за продужење важења у периоду од 06.12.2010. до 05.02.2011. године:**

Жиг рег. бр. **1615** чији је носилац UNIROYAL GOODRICH LICENSING SERVICES, INC., 15 NORTH STREET, DOVER, DELAWARE 19901, US, престао је да важи дана 20.12.2010. године.

Жиг рег. бр. **12249** чији је носилац THE MORGAN CRUCIBLE COMPANY PLC., Morgan House, Madeira Walk, Windsor, Berkshire SL4 1EP, GB, престао је да важи дана 16.12.2010. године.

Жиг рег. бр. **12252** чији је носилац MASSEY FERGUSON Corp., 4830 RIVER GREEN PARKWAY, DULUTH, GA 30136-2574, US, престао је да важи дана 16.12.2010. године.

Жиг рег. бр. **12260** чији је носилац ASTRA AKTIEBOLAG, S-151 85 SODERTALJE, SE, престао је да важи дана 25.1.2011. године.

Жиг рег. бр. **12879** чији је носилац PLIVA, FARMACEUTSKA INDUSTRIJA, DIONIČKO DRUŠTVO, ZAGREB, ULICA GRADA VUKOVARA 49, HR, престао је да важи дана 25.12.2010. године.

Жиг рег. бр. **14905** чији је носилац KOLINSKA, PREHRAMBENA INDUSTRIJA, D.D., LJUBLJANA,

ŠMARTINSKA 30, SI, престао је да важи дана 15.12.2010. године.

Жиг рег. бр. **14910** чији је носилац ACORDIS UK LIMITED, 1 HOLME LANE SPONDON, DERBY, DE21 7BP ENGLESKA, GB, престао је да важи дана 15.12.2010. године.

Жиг рег. бр. **14979** чији је носилац ASSOCIATED ELECTRICAL INDUSTRIAL LIMITED, ONE BRUTON STREET, LONDON, W1X 8AQ, ENGLESKA, GB, престао је да важи дана 23.12.2010. године.

Жиг рег. бр. **15769** чији је носилац PLIVA, FARMACEUTSKA INDUSTRIJA, DIONIČARSKO DRUŠTVO, ZAGREB, ULICA GRADA VUKOVARA 49, HR, престао је да важи дана 29.12.2010. године.

Жиг рег. бр. **17052** чији је носилац PLIVA, FARMACEUTSKA INDUSTRIJA, DIONIČKO DRUŠTVO, ZAGREB, ULICA GRADA VUKOVARA 49, HR, престао је да важи дана 23.12.2010. године.

Жиг рег. бр. **18493** чији је носилац DIN "Fabrika duvana" Niš a.d., u sastavu Philip Morris International, 12.februar 74, Niš, RS, престао је да важи дана 23.1.2011. године.

Жиг рег. бр. 18500 чији је носилац DROGA KOLINSKA Živilska industrija d.d., Kolinska ulica 1, 1544 LJubljana, Slovenija, SI, престао је да важи дана 23.1.2011. године.

Жиг рег. бр. **18521** чији је носилац MERIMA, HEMIJSKA INDUSTRIJA, KRUŠEVAC, YU, престао је да важи дана 23.1.2011. године.

Жиг рег. бр. **18745** чији је носилац SHELL BRANDS INTERNATIONAL AG, Baarermatte, 6340 Baar Switzerland, CH, престао је да важи дана 18.12.2010. године.

Жиг рег. бр. **18750** чији је носилац SHELL BRANDS INTERNATIONAL AG, Baarermatte, 6340 Baar Switzerland, CH, престао је да важи дана 18.12.2010. године.

Жиг рег. бр. **18754** чији је носилац ASTRA ZENECA AB, 151 85 SODERTALJE, SE, престао је да важи дана 18.12.2010. године.

Жиг рег. бр. **18760** чији је носилац Diageo Brands B.V., Molenwerf 10-12, 1014 BG Amsterdam, The Netherlands, NL, престао је да важи дана 18.12.2010. године.

Жиг рег. бр. **18763** чији је носилац Glaxo Group Limited, a British company, Glaxo Wellcome House, Berkeley Avenue, Greenford, Middlesex UB6 0NN, GB, престао је да важи дана 18.12.2010. године.

Жиг рег. бр. **18783** чији је носилац Astellas Pharma Inc., 3 -11, Nihonbashi-Honcho 2-chome, Chuo-ku, Tokyo, JP, престао је да важи дана 18.12.2010. године.

Жиг рег. бр. **25008** чији је носилац HENKEL AG & Co. KGaA, Postfach 1100, D- 4000 Düsseldorf, DE, престао је да важи дана 10.12.2010. године.

Жиг рег. бр. **25044** чији је носилац HENKEL SLOVENIJA Podjetje za proizvodnjo pralnih sredstev, kozmetike in drugih kemičnih proizvodov in za izvajanje trgovinske dejavnosti d.o.o., Industrijska 23, 2000 Maribor, Slovenija , SI, престао је да важи дана 10.12.2010. године.

Жиг рег. бр. **25053** чији је носилац Regent Medical Limited , 1 Silk Street, London EC2Y 8HQ , GB, престао је да важи дана 10.12.2010. године.

Жиг рег. бр. **25057** чији је носилац ROLLS-ROYCE PLC., 65, BUCKINGHAM GATE, LONDON SW1F 6AT, ENGLESKA, GB, престао је да важи дана 10.12.2010. године.

Жиг рег. бр. **25081** чији је носилац ZORKA-PHARMA SA P.O., DD U MEŠOVITOJ SVOJINI ZA PROIZVODNJU FARMACEUTSKIH PROIZVODA I FINIH HEMIKALIJA, ŠABAC, NARODNOG HEROJA 1, RS, престао је да важи дана 25.12.2010. године.

Жиг рег. бр. **25105** чији је носилац PHARMAX LIMITED, 5 Bourne Road Bexley, Kent, DA5INX, UK, престао је да важи дана 25.12.2010. године.

Жиг рег. бр. **25110** чији је носилац KB SEIREN, LTD, 6-1-1. Shimokoubata-cho, Sabae-city, Fukui, JP, престао је да важи дана 25.12.2010. године.

Жиг рег. бр. **35693** чији је носилац Farmacevtska hemiska kozmetička industrija "ALKALOID" AD Skopje c.o., Skopje, Bul. Aleksandar Makedonski br. 12, MK, престао је да важи дана 4.1.2011. године.

Жиг рег. бр. **35702** чији је носилац HEMOFARM Koncern A.D. farmaceutsko-hemijska industrija,

VRŠAC, BEOGRADSKI PUT BB, RS, престао је да важи дана 13.12.2010. године.

Жиг рег. бр. **35703** чији је носилац HEMOFARM D.D., FARMACEUTSKO-HEMIJSKA INDUSTIJA, VRŠAC, BEOGRADSKI PUT BB, RS, престао је да важи дана 13.12.2010. године.

Жиг рег. бр. **35704** чији је носилац HEMOFARM Koncern A.D. farmaceusko-hemijska industrija Vršac, 26 300 Vršac, Beogradski put bb, RS, престао је да важи дана 13.12.2010. године.

Жиг рег. бр. **35705** чији је носилац HEMOFARM Koncern A.D. farmaceutsko-hemijska industrija, VRŠAC, BEOGRADSKI PUT BB, RS, престао је да важи дана 13.12.2010. године.

Жиг рег. бр. **35706** чији је носилац HEMOFARM Koncern A.D. farmaceutsko-hemijska industrija, VRŠAC, BEOGRADSKI PUT BB, RS, престао је да важи дана 13.12.2010. године.

Жиг рег. бр. **35752** чији је носилац GALENIKA a.d., Beograd, Batajnički put b.b., RS, престао је да важи дана 29.1.2011. године.

Жиг рег. бр. **35769** чији је носилац GALENIKA AD, BEOGRAD, BATAJNIČKI DRUM B.B., YU, престао је да важи дана 29.1.2011. године.

Жиг рег. бр. **35804** чији је носилац KOLINSKA, PREHRAMBENA INDUSTRIJA, D.D., LJUBLJANA, ŠMARTINSKA 30, SI, престао је да важи дана 8.1.2011. године.

Жиг рег. бр. **35810** чији је носилац KOLINSKA, PREHRAMBENA INDUSTRIJA, D.D., LJUBLJANA, ŠMARTINSKA 30, SI, престао је да важи дана 8.1.2011. године.

Жиг рег. бр. **36540** чији је носилац SOCIETE GENERALE, a French Societe anonyme, 29 BOULEVARD HAUSSMAN, PARIS 75009, FR, престао је да важи дана 9.1.2011. године.

Жиг рег. бр. **36541** чији је носилац SOCIETE GENERALE, a French Societe anonyme, 29 BOULEVARD HAUSSMAN, PARIS 75009, FR, престао је да важи дана 9.1.2011. године.

Жиг рег. бр. **36597** чији је носилац REYNOLDS METALS COMPANY, 6601 WEST BROAD STREET, RICHMOND, VIRGINIA, US, престао је да важи дана 17.12.2010. године.

Жиг рег. бр. **36598** чији је носилац JOHNSTON PUMP/GENERAL VALVE, INC., 1775 EAST ALLEN AVENUE, GLENDORA, CALIFORNIA, US, престао је да важи дана 8.1.2011. године.

Жиг рег. бр. **36605** чији је носилац BAKER'S DOZEN DONUTS CORPORATION, 1224 DUNDAS STREET EAST, UNIT 5, MISSISSAUGA, ONTARIO L4Y 4A2, CA, престао је да важи дана 9.1.2011. године.

Жиг рег. бр. **36608** чији је носилац C.I. PROMOTORA BANANERA S.A-C.I. PROBAN SA., CALLE 168 SUR NO. 42-97, MEDELLIN, ANTIOQUIA, CO, престао је да важи дана 9.1.2011. године.

Жиг рег. бр. **36609** чији је носилац C.I. PROMOTORA BANANERA S.A-C.I. PROBAN SA., CALLE 168 SUR NO. 42-97, MEDELLIN, ANTIOQUIA, CO, престао је да важи дана 9.1.2011. године.

Жиг рег. бр. **36610** чији је носилац C.I. PROMOTORA BANANERA S.A-C.I. PROBAN SA., CALLE 168 SUR NO. 42-97, MEDELLIN, ANTIOQUIA, CO, престао је да важи дана 9.1.2011. године.

Жиг рег. бр. **36612** чији је носилац CONOPCO, INC., 390 PARK AVENUE NEW YORK, N.Y.10022, US, престао је да важи дана 10.1.2011. године.

Жиг рег. бр. **36617** чији је носилац AVENTIS INC., , 3711 Kennett Pike, Suite 200, Greenville, Delaware 19807, US, престао је да важи дана 10.1.2011. године.

Жиг рег. бр. **36619** чији је носилац DOW AGROSCIENCES LLC, 9330 ZIONSVILLE ROAD, INDIANAPOLIS, INDIANA 46268, US, престао је да важи дана 10.1.2011. године.

Жиг рег. бр. **36668** чији је носилац JOHN WILEY & SONS, INC., 605 THIRD AVENUE, NEW YORK, N.Y. 10156, US, престао је да важи дана 10.1.2011. године.

Жиг рег. бр. **36669** чији је носилац JOHN WILEY & SONS, INC., 605 THIRD AVENUE, NEW YORK, N.Y. 10156, US, престао је да важи дана 10.1.2011. године.

Жиг рег. бр. **36815** чији је носилац ESTEE LAUDER COSMETICS LTD., 16 COMMANDER

BLVD., AGINCOURT, ONTARIO M1S 3K9, CA, престао је да важи дана 14.12.2010. године.

Жиг рег. бр. **36819** чији је носилац ZEON CORPORATION, 6-1, MARUNOUCHI 2-CHOME, CHIYODA-KU, TOKYO 100, JP, престао је да важи дана 19.12.2010. године.

Жиг рег. бр. **36820** чији је носилац ZEON CORPORATION, 6-1, MARUNOUCHI 2-CHOME, CHIYODA-KU, TOKYO 100, JP,престао је да важи дана 19.12.2010. године.

Жиг рег. бр. **36826** чији је носилац ANAM ELECTRONICS CO., LTD., 316-29, HYOSUNG-DONG, BUCK-KU, INCHON, KR, престао је да важи дана 27.12.2010. године.

Жиг рег. бр. **36827** чији је носилац ANAM ELECTRONICS CO., LTD., 316-29, HYOSUNG-DONG, BUCK-KU, INCHON, KR, престао је да важи дана 27.12.2010. године.

Жиг рег. бр. **36828** чији је носилац ARDATH TOBACCO COMPANY LIMITED, Globe House, 4 Temple Place, London, WC2R 2PG, GB, престао је да важи дана 27.12.2010. године.

Жиг рег. бр. **37095** чији је носилац SCHERING CORPORATION, KENILWORTH, NEW JERSEY 07033, US, престао је да важи дана 18.12.2010. године.

Жиг рег. бр. **37096** чији је носилац SIR SPEEDY, INC., 26722 PLAZA DRIVE, MISSION VIEJO, CALIFORNIA 92691, US, престао је да важи дана 24.12.2010. године.

Жиг рег. бр. **37302** чији је носилац MARS INC., 6885 ELM STREET, McLEAN, VIRGINIA 22101-3883, US, престао је да важи дана 29.1.2011. године.

Жиг рег. бр. **37303** чији је носилац KIWANIS INTERNATIONAL, INC., 3636 WOODVIEW TRACE, INDIANAPOLIS, INDIANA 46268, US, престао је да важи дана 29.1.2011. године.

Жиг рег. бр. **37349** чији је носилац SSANGBANGWOOL LTD., 49-4, NONHYUN-DONG, KANGNAM-KU, SEOUL, KR, престао је да важи дана 7.12.2010. године.

Жиг рег. бр. **37354** чији је носилац GENERAL MOTORS LLC, 300 Renaissance Center, Detroit, Michigan 48265-3000, US, престао је да важи дана 11.12.2010. године.

Жиг рег. бр. **37355** чији је носилац GENERAL MOTORS LLC, 300 Renaissance Center, Detroit, Michigan 48265-3000, US, престао је да важи дана 11.12.2010. године.

Жиг рег. бр. **37376** чији је носилац GENERAL MOTORS LLC, 300 Renaissance Center, Detroit, Michigan 48265-3000, US, престао је да важи дана 11.12.2010. године.

Жиг рег. бр. **37378** чији је носилац Diageo Ireland, St. James's Gate, Dublin 8, IE, престао је да важи дана 4.1.2011. године.

Жиг рег. бр. **37427** чији је носилац HYUNDAI ELECTRONICS INDUSTRIES CO., LTD., SAN 136-1, AMI-RI, BUBAL-MYUN, ICHON-KUN, KYOUNGKI-DO, KR, престао је да важи дана 7.12.2010. године.

Жиг рег. бр. **37430** чији је носилац Aktiengesellschaft Adolph Saurer, Textilstrasse 2, CH-9320 Arbon, CH, престао је да важи дана 18.12.2010. године.

Жиг рег. бр. **37443** чији је носилац JACUZZI INC., 100 NORTH WIGET LANE, WALNUT CREEK, CALIFORNIA, US, престао је да важи дана 3.1.2011. године.

Жиг рег. бр. **37478** чији је носилац KRAFT FOODS HOLDINGS, INC., Three Lakes Drive, Northfield, Illinois 60093, US, престао је да важи дана 10.12.2010. године.

Жиг рег. бр. **37482** чији је носилац SAROME CO., LTD., NO. 2-10, 4-CHOME, YASHIRO, SUMIDA-KU, TOKYO, JP, престао је да важи дана 20.12.2010. године.

Жиг рег. бр. **37485** чији је носилац Danly IEM, LLC c/o Connell Limited Partnership, One International Place, Fort Hill Square, Boston, Massachusetts 02110, US, престао је да важи дана 24.12.2010. године.

Жиг рег. бр. **37491** чији је носилац CELBA Preduzeće za proizvodnju i trgovinu D.O.O., Beograd, Dunavska br. 21, YU, престао је да важи дана 10.12.2010. године.

Жиг рег. бр. **37533** чији је носилац PFIZER ENTERPRISES SARL, ROND-POINT DU KIRCHBERG 51, AVENUE JF KENNEDY, L-1855

LUXEMBOURG, LUXEMBOURG, LU, престао је да важи дана 31.1.2011. године.

Жиг рег. бр. **37572** чији је носилац UNITED DISTILLERS & VINTNERS (SJ) B.V., MOLENWERF 10-12, 1014 BG AMSTERDAM, THE NETHERLANDS, NL, престао је да важи дана 22.1.2011. године.

Жиг рег. бр. **37601** чији је носилац PFIZER ENTERPRISES SARL, ROND-POINT DU KIRCHBERG 51, AVENUE JF KENNEDY, L-1855 LUXEMBOURG, LUXEMBOURG, LU, престао је да важи дана 30.1.2011. године.

Жиг рег. бр. **37616** чији је носилац IMI NORGREN LIMITED, PO BOX 22, EASTERN AVENUE, LICHFIELD, STAFFORDSHIRE WS13 6SB, ENGLESKA, GB, престао је да важи дана 17.12.2010. године.

Жиг рег. бр**. 37637** чији је носилац DIN "Fabrika duvana" Niš a.d., u sastavu Philip Morris International, 12. februar 74, Niš, RS, престао је да важи дана 29.1.2011. године.

Жиг рег. бр. **37638** чији је носилац NYNEX CORPORATION, 335 MADISON AVENUE, NEW YORK 10017, US, престао је да важи дана 15.1.2011. године.

Жиг рег. бр. **37639** чији је носилац NYNEX CORPORATION, 335 MADISON AVENUE, NEW YORK 10017, US, престао је да важи дана 15.1.2011. године.

Жиг рег. бр. **37774** чији је носилац DIN "Fabrika duvana" Niš a.d., u sastavu Philip Morris International, 12. februar 74, Niš, RS, престао је да важи дана 18.12.2010. године.

Жиг рег. бр. **37775** чији је носилац DIN "Fabrika duvana" Niš a.d., u sastavu Philip Morris International, 12. februar 74, Niš, RS, престао је да важи дана 18.12.2010. године.

Жиг рег. бр. **37776** чији је носилац DIN "Fabrika duvana" Niš a.d., u sastavu Philip Morris International, 12. februar 74, Niš, RS, престао је да важи дана 18.12.2010. године.

Жиг рег. бр. **37777** чији је носилац DIN "Fabrika duvana" Niš a.d., u sastavu Philip Morris International, 12. februar 74, Niš, RS, престао је да важи дана 18.12.2010. године.

Жиг рег. бр. **37778** чији је носилац DIN "Fabrika duvana" Niš a.d., u sastavu Philip Morris international, 12. februar 74, Niš, RS, престао је да важи дана 18.12.2010. године.

Жиг рег. бр. **37779** чији је носилац DIN "Fabrika duvana" Niš a.d., u sastavu Philip Morris International, 12. februar 74, Niš, RS, престао је да важи дана 19.12.2010. године.

Жиг рег. бр. **37780** чији је носилац DIN "Fabrika duvana" Niš a.d., u sastavu Philip Morris International, 12. februar 74, Niš, RS, престао је да важи дана 19.12.2010. године.

Жиг рег. бр. **37781** чији је носилац DIN "Fabrika duvana" Niš a.d., u sastavu Philip Morris International, 12. februar 74, Niš, RS, престао је да важи дана 19.12.2010. године.

Жиг рег. бр. **37782** чији је носилац LEGENT CORPORATION, ONE COMPUTER ASSOCIATES PLAZA, ISLANDIA, NY 11749, US, престао је да важи дана 10.1.2011. године.

Жиг рег. бр. **37945** чији је носилац DIN "Fabrika duvana " Niš a.d., u sastavu Philip Morris International, 12. februar 74, Niš, RS, престао је да важи дана 18.12.2010. године.

Жиг рег. бр. **37946** чији је носилац DIN "Fabrika duvana" Niš a.d., u sastavu Philip Morris International, 12. februar 74, Niš, RS
престао је да важи дана 18.12.2010. године.

Жиг рег. бр. **37947** чији је носилац DIN " Fabrika duvana " Niš a.d., u sastavu Philip Morris International, 12. februar 74, Niš, RS, престао је да важи дана 18.12.2010. године.

Жиг рег. бр. **37948** чији је носилац DIN "Fabrika duvana" Niš a.d., u sastavu Philip Morris International, 12. februar 74, Niš, RS, престао је да важи дана 18.12.2010. године.

Жиг рег. бр. **37949** чији је носилац DIN "Fabrika duvana" Niš a.d., u sastavu Philip Morris International, 12. februar 74, Niš, RS, престао је да важи дана 18.12.2010. године.

Жиг рег. бр. **37950** чији је носилац DIN " Fabrika duvana" Niš a.d., 12. februar 74, Niš, RS, престао је да важи дана 19.12.2010. године.

Жиг рег. бр. **38030** чији је носилац DIN "Fabrika duvana" Niš a.d., u sastavu Philip Morris International,

12. februar 74, Niš, RS, престао је да важи дана 10.12.2010. године.

Жиг рег. бр. **38031** чији је носилац DIN "Fabrika duvana" Niš a.d., u sastavu Philip Morris International, 12. februar 74, Niš, RS, престао је да важи дана 10.12.2010. године.

Жиг рег. бр. 38032 чији је носилац FOUNTAIN NETHERLANDS HOLDING B.V., BARONIELAAN 139 NL-4818 PD BREDA, NL, престао је да важи дана 12.12.2010. године.

Жиг рег. бр. **38034** чији је носилац REYNOLDS METALS COMPANY, 6601 WEST BROAD STREET, RICHMOND, VIRGINIA, US, престао је да важи дана 17.12.2010. године.

Жиг рег. бр. **38035** чији је носилац MARS, INC., 6885 Elm Street, McLean, Virginia 22101-3883, US, престао је да важи дана 17.12.2010. године.

Жиг рег. бр. **38038** чији је носилац ELONEX PLC, 2, APSLEY WAY, LONDON, NW2 7HE, GB, престао је да важи дана 7.12.2010. године.

Жиг рег. бр. **38102** чији је носилац CAMPINA AG, WIMPFENER STRASSE 125, 74078 HEILBRONN, DE, престао је да важи дана 7.12.2010. године.

Жиг рег. бр. **38103** чији је носилац GENERAL MOTORS LLC, 300 Renaissance Center, Detroit, Michigan 48265-3000, US, престао је да важи дана 11.12.2010. године.

Жиг рег. бр. **38107** чији је носилац SYNGENTA LIMITED SYNGENTA EUROPEAN REGIONAL CENTRE, PRIESTLEY ROAD, SURREY RESEARCH PARK, GUILDFORD, SURREY GU2 7YH, GB, престао је да важи дана 10.1.2011. године.

Жиг рег. бр. **38108** чији је носилац BATMARK, INC., 1209 ORANGE STREET, WILMINGTON, DELAWARE, US, престао је да важи дана 11.1.2011. године.

Жиг рег. бр. **38110** чији је носилац KIA MOTORS CORPORATION, 231 Yangjae-dong, Seocho-gu, Seoul, KR, престао је да важи дана 14.1.2011. године.

Жиг рег. бр. **38111** чији је носилац HEWLETT-PACKARD COMPANY, proizvodno i trgovinsko preduzeće organizovano po propisima države Delaware, 3000 HANOVER STREET, PALO ALTO, CALIFORNIA 94304-0890, US, престао је да важи дана 14.1.2011. године.

Жиг рег. бр. **38378** чији је носилац EMBRAER EMPRESA BRASILEIRA DE AERONAUTICA S.A., CAIXA POSTAL 343, CEP 12225 SAO JOSE DOS CAMPOS, SAO PAULO, BR, престао је да важи дана 30.1.2011. године.

Жиг рег. бр. **38644** чији је носилац METEX CORPORATION, 15-4, JAMWON-DONG, SEOCHO-KU, SEOUL, KR, престао је да важи дана 10.12.2010. године.

Жиг рег. бр. **39525** чији је носилац FRANCK - PREHRAMBENA INDUSTRIJA, ZAGREB, VODOVODNA 20, HR, престао је да важи дана 28.1.2011. године.

Жиг рег. бр. **39526** чији је носилац FRANCK - PREHRAMBENA INDUSTRIJA, ZAGREB, VODOVODNA 20, HR, престао је да важи дана 28.1.2011. године.

Жиг рег. бр. **39527** чији је носилац FRANCK - PREHRAMBENA INDUSTRIJA, ZAGREB, VODOVODNA 20, HR, престао је да важи дана 28.1.2011. године.

Жиг рег. бр. **39528** чији је носилац FRANCK - PREHRAMBENA INDUSTRIJA, ZAGREB, VODOVODNA 20, HR, престао је да важи дана 28.1.2011. године.

Жиг рег. бр. **39529** чији је носилац FRANCK - PREHRAMBENA INDUSTRIJA, ZAGREB, VODOVODNA 20, HR, престао је да важи дана 28.1.2011. године.

Жиг рег. бр. **41421** чији је носилац LEK farmacevtska družba d.d., Verovškova 57, 1526 Ljubljana, SI, престао је да важи дана 8.1.2011. године.

Жиг рег. бр**. 41576** чији је носилац KEMOSTIK, TOVARNA LEPIL IN KEMIČNIH IZDELKOV, P.O., KAMNIK, MOLKOVA POT 10, SI, престао је да важи дана 10.12.2010. године.

Жиг рег. бр. **41719** чији је носилац CHOICE HOTELS INTERNATIONAL, INC., 10750 COLUMBIA PIKE, SILVER SPRING, MARYLAND 20901, US, престао је да важи дана 13.12.2010. године.

Жиг рег. бр. **43756** чији је носилац Veterinarska stanica "Evro-lek" d.o.o., Kralja Milutina 4, 15000 Šabac, RS, престао је да важи дана 2.2.2011. године.

Жиг рег. бр. **43757** чији је носилац ZDRAVLJE A.D., FARMACEUTSKO-HEMIJSKA INDUSTRIJA,

Vlajkova 199, Leskovac, RS, престао је да важи дана 2.2.2011. године.

Жиг рег. бр. **43781** чији је носилац GROSSOPTIC D.O.O., PREDUZEĆE ZA EXPORT-IMPORT I PROIZVODNJU OPTIČKIH INSTRUMENATA I SOČIVA I OPTALMIČNIH PROIZVODA, M. JOVANOVIĆA 11, BEOGRAD, RS, престао је да важи дана 2.2.2011. године.

Жиг рег. бр. **43883** чији је носилац ACTAVIS AD, 2 Kniaginia Maria Loisa Blvd, Business Centre TSUM, 1000-Sofia, Bugarska, BG, престао је да важи дана 21.12.2010. године.

Жиг рег. бр. **43898** чији је носилац EURO 011 Samostalna zanatska metalopreradjivačka radnja, Moravska br.21, deo prvi 11194, RS, престао је да важи дана 12.1.2011. године.

Жиг рег. бр. **44043** чији је носилац SZR "NATURALIS", Branka Radičevića 23, 26222 Bavanište, RS, престао је да важи дана 16.1.2011. године.

Жиг рег. бр. **44044** чији је носилац SZR "NATURALIS", Branka Radičevića 23, 26222 Bavanište, RS, престао је да важи дана 16.1.2011. године.

Жиг рег. бр. **44045** чији је носилац SZR "NATURALIS", Branka Radičevića 23, 26222 Bavanište, RS, престао је да важи дана 16.1.2011. године.

Жиг рег. бр. **44046** чији је носилац SZR "NATURALIS", Branka Radičevića 23, 26222 Bavanište, YU, престао је да важи дана 16.1.2011. године.

Жиг рег. бр. **44081** чији је носилац PHARMACHIN HOLDING AKTSIONERSKO DRUZESTVO, ILIENSKO CHAUSSEE 16,1220 SOFIA, BG, престао је да важи дана 15.1.2011. године.

Жиг рег. бр. **44790** чији је носилац LENAL PHARM, Ratka Mitrovića 80, Beograd, RS, престао је да важи дана 17.1.2011. године.

Жиг рег. бр. **45239** чији је носилац ZAGREBAČKA PIVOVARA, ZAGREB, ILICA 224, HR, престао је да важи дана 21.1.2011. године.

Жиг рег. бр. **45490** чији је носилац ZAGREBAČKA PIVOVARA - PREDUZEĆE ZA PROIZVODNJU PIVA, ALKOHOLNIH I BEZALKOHOLNIH PIĆA, ZAGREB, ILICA 224, HR, престао је да важи дана 25.1.2011. године.

Жиг рег. бр. **45491** чији је носилац ZAGREBAČKA PIVOVARA - PREDUZEĆE ZA PROIZVODNJU PIVA, ALKOHOLNIH I BEZALKOHOLNIH PIĆA, ZAGREB, ILICA 224, HR, престао је да важи дана 25.1.2011. године.

Жиг рег. бр. **46248** чији је носилац GENETICS INSTITUTE, LLC a Delaware limited liability company, 87 Cambridge Park Drive, Cambridge, Massachusetts 02140, US, престао је да важи дана 13.12.2010. године.

Жиг рег. бр. **46250** чији је носилац WYETH, FIVE GIRALDA FARMS, MADISON, NEW JERSEY 07940, US, престао је да важи дана 8.12.2010. године.

Жиг рег. бр. **46251** чији је носилац WYETH, FIVE GIRALDA FARMS, MADISON, NEW JERSEY 07940, US, престао је да важи дана 8.12.2010. године.

Жиг рег. бр. **46252** чији је носилац BERLIN-CHEMIE AG, Glienicker Weg 125-127, D-12489 Berlin, DE, престао је да важи дана 14.12.2010. године.

Жиг рег. бр. **46254** чији је носилац WYETH, FIVE GIRALDA FARMS, MADISON, NEW JERSEY 07940, US, престао је да важи дана 8.12.2010. године.

Жиг рег. бр. **46287** чији је носилац PTP "TREND CO.R" D.O.O., Moše Pijade 23, Novi Pazar, RS, престао је да важи дана 12.12.2010. године.

Жиг рег. бр. **46289** чији је носилац MENARINI INTERNATIONAL OPERATIONS LUXEMBOURG S.A., 1, Avenue de la Gare, 1611 Luxembourg, LU, престао је да важи дана 20.12.2010. године.

Жиг рег. бр. **46295** чији је носилац MENARINI INTERNATIONAL OPERATIONS LUXEMBOURG S.A., 1, Avenue de la Gare, 1611 Luxembourg, LU, престао је да важи дана 20.12.2010. године.

Жиг рег. бр. **46296** чији је носилац MENARINI INTERNATIONAL OPERATIONS LUXEMBOURG S.A., 1, Avenue de la Gare, 1611 Luxembourg, LU, престао је да важи дана 20.12.2010. године.

Жиг рег. бр. **46297** чији је носилац MENARINI INTERNATIONAL OPERATIONS LUXEMBOURG S.A., 1, Avenue de la Gare, 1611 Luxembourg, LU, престао је да важи дана 20.12.2010. године.

Жиг рег. бр. **46298** чији је носилац MENARINI INTERNATIONAL OPERATIONS LUXEMBOURG S.A., 1, Avenue de la Gare, 1611 Luxembourg, LU, престао је да важи дана 20.12.2010. године.

Жиг рег. бр. **46331** чији је носилац STANOJEVIĆ SNEŽANA, SAMOSTALNI RADNIK U OBLASTI

KULTURE - MUZIČAR INSTRUMENTALISTA, Stojana Protića 14/I, 11000 Beograd, RS, престао је да важи дана 14.12.2010. године.

Жиг рег. бр. **46353** чији је носилац The Lubrizol Corporation (Ohio corporation), 29400 Lakeland Boulevard, Wickliffe, Ohio 44092-2298, US, престао је да важи дана 16.1.2011. године.

Жиг рег. бр. **46371** чији је носилац Berlin-Chemie AG, Glienicker Weg 125, D-12489 Berlin, Deutschland, DE, престао је да важи дана 22.1.2011. године.

Жиг рег. бр. **46372** чији је носилац FORCE MANNER CO., LTD., 11/F., Valiant Commercial Building, Nos. 22-24, Prat Avenue, Tsimshatsui, Kowloon, Hong Kong, HK, престао је да важи дана 23.1.2011. године.

Жиг рег. бр. **46384** чији је носилац PP RAMOVIĆ, Stevana Nemanje - soliter, Novi Pazar, RS, престао је да важи дана 8.12.2010. године.

Жиг рег. бр. **46386** чији је носилац KIRKA CORPORATION D.O.O., Bul. M. Pupina 10z/IV, Novi Beograd, RS, престао је да важи дана 15.12.2010. године.

Жиг рег. бр. **46387** чији је носилац SKKR "KLASIK JEANS" KADRIĆ MUAMER, S. Bajevića b.b., Novi Pazar, RS, престао је да важи дана 12.12.2010. године.

Жиг рег. бр. **46400** чији је носилац Akcionarsko društvo "BANAT" konditorska industrija, Pavliški put levo, Vršac, RS, престао је да важи дана 8.12.2010. године.

Жиг рег. бр. **46401** чији је носилац Akcionarsko društvo "BANAT" konditorska industrija, Pavliški put levo, Vršac, RS, престао је да важи дана 8.12.2010. године.

Жиг рег. бр. **46407** чији је носилац SZR "NATURALIS", Branka Radičevića 23, 26222 Bavanište, RS, престао је да важи дана 16.1.2011. године.

Жиг рег. бр. **46408** чији је носилац SZR "NATURALIS", Branka Radičevića 23, 26222 Bavanište, RS, престао је да важи дана 16.1.2011. године.

Жиг рег. бр. **46411** чији је носилац Berlin-Chemie AG, Glienicker Weg 125, D-12489 Berlin, Deutschland, DE, престао је да важи дана 22.1.2011. године.

Жиг рег. бр. **46417** чији је носилац AMCOL INTERNATIONAL CORPORATION, One North Arlington, 1500 West Shure Drive, Arlington Heights, Chicago, Illinois 60004, US, престао је да важи дана 28.12.2010. године.

Жиг рег. бр. **46429** чији је носилац GENETICS INSTITUTE,LLC A DELAWARE LIMITED LIABILITY COMPANY, 87 CAMBRIDGE PARK DRIVE,CAMBRIDGE,MASSACHUSETTS 0214, US, престао је да важи дана 20.12.2010. године.

Жиг рег. бр. **46430** чији је носилац WYETH, FIVE GIRALDA FARMS,MADISON,NEW JERSEY 07940, US, престао је да важи дана 20.12.2010. године.

Жиг рег. бр. **46431** чији је носилац GENETICS INSTITUTE, LLC A DELAWARE LIMITED LIABILITY COMPANY, 87 CAMBRIDGE PARK DRIVE, CAMBRIDGE, MASSACHUSETTS 0214, US, престао је да важи дана 20.12.2010. године.

Жиг рег. бр. **46434** чији је носилац Wm. Wrigley Jr. Company, 410 North Michigan Avenue, Chicago, Illinois 60611, US, престао је да важи дана 25.1.2011. године.

Жиг рег. бр. **46437** чији је носилац DELTA ICE-CREAM S.A., 3 Kerkyras str., 177 78 Tavros, Athens, Greece, GR, престао је да важи дана 25.1.2011. године.

Жиг рег. бр. **46439** чији је носилац Merck Sharp & Dohme Corp.a New Jersey Corporation, One Merck Drive, P.O. Box 100, Whitehouse Station, New Jersey, US, престао је да важи дана 26.1.2011. године.

Жиг рег. бр. **46441** чији је носилац CASTROL LIMITED, Burmah Castrol House, Pipers Way, SWINDON, Wiltshire SN3 1RE, Engleska, GB, престао је да важи дана 19.1.2011. године.

Жиг рег. бр. **46451** чији је носилац ZVIJEZDA, DEONIČARSKO DRUŠTVO ZA PROIZVODNJU TRGOVINU I USLUGE, Ulica Marijana Čavića 1, Zagreb, HR, престао је да важи дана 19.12.2010. године.

Жиг рег. бр. **46462** чији је носилац BEOGRADSKA OTVORENA ŠKOLA, Masarikova 5/16, 11000 Beograd, RS, престао је да важи дана 29.1.2011. године.

Жиг рег. бр. **46463** чији је носилац MULTIVITA D.O.O. za proizvodnju i promet Vršac, Beogradski put bb, 26300 Vršac, RS, престао је да важи дана 30.1.2011. године.

Жиг рег. бр. **46476** чији је носилац H-D Michigan, LLC, 315 W. Huron Street, Suite 400, Ann

Arbor, MI 48103, US, престао је да важи дана 2.2.2011. године.

Жиг рег. бр. **46499** чији је носилац PREDUZEĆE KOMPANI" D.O.O.", Nušićeva 15, Beograd, YU, престао је да важи дана 31.1.2011. године.

Жиг рег. бр. **46500** чији је носилац BROKAT D.O.O., PREDUZEĆE ZA PROIZVODNJU ODEĆE, Ive Andrića 91, Novi Pazar, RS, престао је да важи дана 30.1.2011. године.

Жиг рег. бр. **46501** чији је носилац AGENCIJA "PRODIDE" DEJAN TRPKOVIĆ, Gospodar Jevremova 9A, Beograd, RS, престао је да важи дана 2.2.2011. године.

Жиг рег. бр. **46510** чији је носилац AURELIO COMPANY DOO PRIVREDNO DRUŠTVO ZA PROIZVODNJU HRANE I PRODAJU, EXPORT-IMPORT , BEOGRAD, BULEVAR DESPOTA STEFANA 6, RS, престао је да важи дана 19.1.2011. године.

Жиг рег. бр. **46513** чији је носилац WYETH, FIVE GIRALDA FARMS,MADISON,NEW JERSEY 07940, US, престао је да важи дана 20.12.2010. године.

Жиг рег. бр. **46514** чији је носилац GE HEALTHCARE LIMITED, Amersham Place, Little Chalfont, Buckinghamshire, HP7 9NA England, GB, престао је да важи дана 20.12.2010. године.

Жиг рег. бр. **46515** чији је носилац WYETH, FIVE GIRALDA FARMS, MADISON, NEW JERSEY 07940, US, престао је да важи дана 20.12.2010. године.

Жиг рег. бр. **46516** чији је носилац WYETH, FIVE GIRALDA FARMS, MADISON, NEW JERSEY 07942, US, престао је да важи дана 20.12.2010. године.

Жиг рег. бр. **46517** чији је носилац MENARINI INTERNATIONAL OPERATIONS LUXEMBOURG S.A., 1, Avenue de la Gare, 1611 Luxembourg, LU, престао је да важи дана 21.12.2010. године.

Жиг рег. бр. **46519** чији је носилац HEWLETT-PACKARD DEVELOPMENT COMPANY L.P., 20555 S.H. 249,HOUSTON,TEXAS 77070, US, престао је да важи дана 29.12.2010. године.

Жиг рег. бр. **46572** чији је носилац BERLIN CHEMIE AG, Glienicker Weg 125/127, D-12489 Berlin, DE, престао је да важи дана 22.1.2011. године.

Жиг рег. бр. **46590** чији је носилац ŠUMADIJA A.D., TRGOVINA KANCELARIJSKOM OPREMOM, MATERIJALOM I PAPIROM, Goce Delčeva 36, 11071 Beograd, RS, престао је да важи дана 15.1.2011. године.

Жиг рег. бр. **46595** чији је носилац TERMOTEHNA D.O.O., GRAĐEVINSKO PREDUZEĆE, Humska 4, Beograd, RS, престао је да важи дана 19.12.2010. године.

Жиг рег. бр. **46596** чији је носилац BITAS, PREDUZEĆE ZA IZVOĐENJE ZAVRŠNIH RADOVA U GRAĐEVINARSTVU, SA P.O., Ljutice Bogdana 11a, Beograd, RS, престао је да важи дана 19.12.2010. године.

Жиг рег. бр. **46621** чији је носилац SZR ALATNICA PEŠOVIĆ, Golubinačka 89, 22310 Šimanovci, RS, престао је да важи дана 5.1.2011. године.

Жиг рег. бр**. 46622** чији је носилац CEDEVITA d.o.o., Planinska bb, 10000 Zagreb, HR, престао је да важи дана 8.1.2011. године.

Жиг рег. бр. **46623** чији је носилац AGOURON PHARMACEUTICALS, INC., 10350 North Torrey Pines Road, La Jolla, California 92037-1020, US, престао је да важи дана 11.1.2011. године.

Жиг рег. бр. **46625** чији је носилац JU-BONUS, Beograd, Vinogradski venac 31/1, RS, престао је да важи дана 12.1.2011. године.

Жиг рег. бр**. 46675** чији је носилац MESARA "CICVARIĆ", Vl. JOVAN CICVARIĆ, Žarka Zrenjanina bb, Sefkerin, RS, престао је да важи дана 13.12.2010. године.

Жиг рег. бр. **46718** чији је носилац YUCO-HEMIJA AD NOVI SAD, Futoški put 42-44, Novi Sad, RS, престао је да важи дана 6.12.2010. године.

Жиг рег. бр. **46747** чији је носилац SKKT "FINEX PRODUCTION", HAZIROVIĆ FAHRUDIN, Jošanički kej 36, Novi Pazar, RS, престао је да важи дана 23.1.2011. године.

Жиг рег. бр. **46753** чији је носилац WORLDWIDE RETAIL EXCHANGE LLC, 625 NORTH WASHINGTON STREET,ALEXANDRIA,VIRGINIA 22314, US, престао је да важи дана 5.1.2011. године.

Жиг рег. бр. **46830** чији је носилац Astellas Pharma Inc., 3-11,Nihonbashi-honcho 2-chome, Chuo-ku, Tokyo, JP, престао је да важи дана 31.1.2011. године.

Жиг рег. бр. **46853** чији је носилац Continental Exchange Solutions, Inc., a corporation organized and existing under the laws of the State of Delaware, 13850

Cerritos Corporate Drive, Suite E, Cerritos, California 90703 (US), US, престао је да важи дана 15.1.2011. године.

Жиг рег. бр. **46905** чији је носилац SOCIETE GENERALE, 29 Boulevard Haussmann, 75009 Paris, FR, престао је да важи дана 4.1.2011. године.

Жиг рег. бр. **47370** чији је носилац SKKR CONZUL JEANS" ARSLANOVIĆ HUSEIN", Kej skopskih žrtava 26, Novi Pazar, RS, престао је да важи дана 12.1.2011. године.

Жиг рег. бр. **47547** чији је носилац SZR "NATURALIS", Branka Radičevića 23, 26222 Bavanište, YU, престао је да важи дана 16.1.2011. године.

Жиг рег. бр. **47553** чији је носилац UNILEVER N.V., Weena 455, 3013 AL Rotterdam, NL, престао је да важи дана 8.12.2010. године.

Жиг рег. бр. **47728** чији је носилац Preduzeće za proizvodnju, trgovinu i usluge "PRODIREKT CONSULTING GROUP" D.O.O., Gospodar Jevremova 9a, Beograd, YU, престао је да важи дана 2.2.2011. године.

Жиг рег. бр. **47995** чији је носилац EURO 011 - SAMOSTALNA ZANATSKAN METALOPRERAĐIVAČKA RADNJA, MORAVSKA 21-I DEO,11194 BEOGRAD, RS, престао је да важи дана 26.1.2011. године.

Жиг рег. бр. **57231** чији је носилац BRAVO S&S d.o.o., Kneza Miloša 15, Loznica, RS, престао је да важи дана 14.1.2011. године.

Жиг рег. бр. **57918** чији је носилац BRAVO S&S d.o.o., Kneza Miloša 15, Loznica, RS, престао је да важи дана 14.1.2011. године.

### 2. На основу одрицања носиоца жига :

Жиг бр. **48117** чији је носилац Koncern za proizvodnju i promet konditorskih proizvoda "BAMBI - BANAT" AD, Beograd, Bulevar Zorana Đinđića 8A, RS, престао да важи дана 12.05.2011. године. Решење о престанку донето 07.06.2011. године.

Жиг бр. **48116** чији је носилац Koncern za proizvodnju i promet konditorskih proizvoda "BAMBI - BANAT" AD, Beograd, Bulevar Zorana Đinđića 8A, RS, престао да важи дана 12.05.2011. године. Решење о престанку донето 07.06.2011. године.

Жиг бр. **48677** чији је носилац Koncern za proizvodnju i promet konditorskih proizvoda "BAMBI - BANAT" AD, Beograd, Bulevar Zorana Đinđića 8A, RS, престао да важи дана 12.05.2011. године. Решење о престанку донето 07.06.2011. године.

Жиг бр. **48676** чији је носилац Koncern za proizvodnju i promet konditorskih proizvoda "BAMBI - BANAT" AD, Beograd, Bulevar Zorana Đinđića 8A, RS, престао да важи дана 12.05.2011. године. Решење о престанку донето 07.06.2011. године.

### 3. На основу престанка носиоца жига :

Жиг бр. **54080** чији је носилац MIBONI d.o.o. Beograd, Pante Tutundžić 46/7, 11070 Novi Beograd, RS, престао да важи дана 23.06.2009. године. Решење о престанку донето 26.07.2011. године.

## ОБЈАВА ИНФОРМАЦИЈА О МЕЂУНАРОДНИМ ЖИГОВИМА ЗА КОЈЕ ЈЕ ЗАТРАЖЕНО ПРИЗНАЊЕ У РЕПУБЛИЦИ СРБИЈИ

Gazzete OMPI des marques internationales
WIPO Gazette of International Marks

Број 19/2011 - 27/2011 (2011-06-02 - 2011-07-28)

**1. Registracije** (Registrations)

(111) 1075281
(151) 30.03.2011.
(540)

(732) MINERVA S.A. EDIBLE OILS ENTERPRISES
(511) 29

(111) 1075293
(151) 05.04.2011.
(540)

**ARNOLD**

(732) MTD PRODUCTS INC
(511) 07 09 12

(111) 1075294
(151) 11.04.2011.
(540)

**ROUGH & TOUGH**

(732) Henkel AG & Co. KGaA
(511) 03

(111) 1075296
(151) 19.04.2011.
(540)

**ERACLEA**

(732) Hylaco, LLC
(511) 03

(111) 1075321
(151) 01.04.2011.
(540)

**AURIOL**

(732) Lidl Stiftung & Co. KG
(511) 03 05 09 10 14 21

(111) 1075323
(151) 27.01.2011.
(540)

**Allegretto**

(732) Heimbs Kaffee GmbH & Co. KG
(511) 11 30 43

(111) 1075327
(151) 25.03.2011.
(540)

(732) MONCLER S.R.L.
(511) 09 18 25

(111) 1075337
(151) 13.04.2011.
(540)

(732) Datang Telecom International Technology Co., Ltd.
(511) 09 38 42

(111) 1075352
(151) 17.01.2011.
(540)

**TMIS**

(732) Aktiebolaget Electrolux
(511) 07 09 11

(111) 1075360
(151) 02.03.2011.
(540)

**МУЛЬТИФОРТ**

(732) Obschestvo s ogranichennoi otvetstvennostyu "NAUCHNO-PROIZVODSTVENNAYA FIRMA "MATERIA MEDICA HOLDING"
(511) 05

(111) 1075364
(151) 31.03.2010.
(540)

(732) S.C. PROMEX SA
(511) 06 07 08 11 12

(111) 1075377
(151) 23.12.2010.
(540)

(732) ALPHA-BIO TEC. Ltd.
(511) 40

(111) 1075381
(151) 27.12.2010.
(540)

(732) The VAPORMATIC Co. Ltd.
(511) 01 02 03 04 06 07 08 09 11

(111) 1075395
(151) 22.03.2011.
(540)

(732) TURBON AG
(511) 02

(111) 1075396
(151) 22.03.2011.
(540)

**TURBON**

(732) TURBON AG
(511) 02

(111) 1075398
(151) 03.03.2011.
(540)

**SPAGENERIC**

(732) TOMIL s.r.o.
(511) 03 05 16 38

(111) 1075415
(151) 11.04.2011.
(540)

**SHINING HOUSE**

(732) Guangdong Shining House Int'l Jewelry Limited
(511) 14 35

(111) 1075419
(151) 18.02.2011.
(540)

(732) Industrija piva i sokova "Trebjesa" AD Nikšić
(511) 32 35

(111) 1075420
(151) 18.02.2011.
(540)

(732) Industrija piva i sokova "Trebjesa" AD Nikšić
(511) 32 35

(111) 1075421
(151) 18.02.2011.
(540)

(732) Industrija piva i sokova "Trebjesa" AD Nikšić
(511) 32 35

(111) 1075422
(151) 18.02.2011.
(540)

(732) Industrija piva i sokova "Trebjesa" AD Nikšić
(511) 32 35

(111) 1075434
(151) 03.03.2011.
(540)

(732) manroland AG
(511) 16 35 41

(111) 1075438
(151) 29.12.2010.
(540)

(732) ZHEJIANG WUFANGZHAI INDUSTRY CO., LTD.
(511) 29 30 31 33

(111) 1075442
(151) 13.04.2011.
(540)

(732) Meda Pharmaceuticals Inc.
(511) 05

(111) 1075443
(151) 10.02.2011.
(540)

**LA MONFERRINA**

(732) Imperia & Monferrina s.p.a.
(511) 07 11

(111) 1075445
(151) 14.12.2010.
(540)

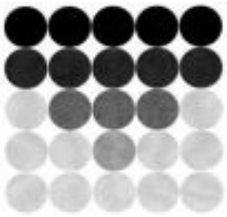

(732) BRITA GmbH
(511) 05 07 11 21 32 40

(111) 1075449
(151) 28.03.2011.
(540)

(732) Industrija za mleko, mlecni proizvodi i sokovi akcionersko drustvo MLEKARA Bitola
(511) 29 30 35 39 43

(111) 1075450
(151) 16.03.2011.
(540)

(732) SANOFI-AVENTIS
(511) 05 10 16

(111) 1075453
(151) 10.03.2011.
(540)

**FROGTAPE**

(732) Shurtape Technologies, LLC
(511) 16 17

(111) 1075456
(151) 01.11.2010.
(540)

**VOYO**

(732) CME MEDIA PRO B.V.
(511) 09 35 38 41 42

(111) 1075465
(151) 07.04.2011.
(540)

**Dr. Wolff's Acne Attack**

(732) Dr. August Wolff GmbH & Co. KG Arzneimittel
(511) 03 05

(111) 1075478
(151) 23.03.2011.
(540)

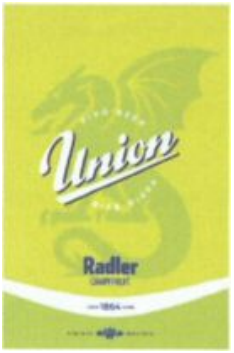


(732) Pivovarna Union d.d.
(511) 32 35 39

(111) 1075479
(151) 21.03.2011.
(540)

(732) Pivovarna Union d.d.
(511) 32 35 39

(111) 1075480
(151) 21.03.2011.
(540)

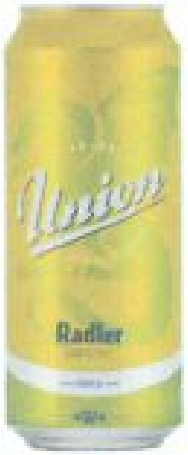


(732) Pivovarna Union d.d.
(511) 32 35 39

(111) 1075481
(151) 21.03.2011.
(540)

(732) Pivovarna Union d.d.
(511) 32 35 39

(111) 1075482
(151) 21.03.2011.
(540)

(732) Pivovarna Union d.d.
(511) 32 35 39

(111) 1075495
(151) 28.03.2011.
(540)

KOSMODISK

(732) STUDIO MODERNA SA
(511) 03 05 10

(111) 1075513
(151) 26.01.2011.
(540)

FLOOR GRES

(732) FLORIM S.P.A.
(511) 11 19 27

(111) 1075518
(151) 16.12.2010.
(540)

**FRUIT SECURITY**

(732) Fruit Security GmbH
(511) 06 19 37

(111) 1075525
(151) 17.11.2010.
(540)

ELSEVIER

(732) Elsevier BV
(511) 09 16 41

(111) 1075540
(151) 26.11.2010.
(540)

TORO 25

(732) A.T.P. AVANZATE TECNOLOGIE PLASTICHE S.R.L.
(511) 11 17 19

(111) 1075544
(151) 23.12.2010.
(540)

**TANGO INFINITY**

(732) Bio-Rad Medical Diagnostics GmbH
(511) 01 05 10

(111) 1075560
(151) 02.02.2011.
(540)

Riso della Scala

(732) RISERIA CREMONESI E. E C. S.N.C.
(511) 30

(111) 1075564
(151) 09.02.2011.
(540)

**Motoo**

(732) Hans Hess Autoteile GmbH
(511) 01 03 04 05 06 07 09 12 35 37

(111) 1075572
(151) 06.04.2011.
(540)

pirnar

(732) Pasarstvo Pirnar Roman s.p.
(511) 06 35 38

(111) 1075575
(151) 02.03.2011.
(540)

tivù sat HD

(732) Tivu' S.R.L.
(511) 09 16 35 38 41

(111) 1075584
(151) 30.03.2011.
(540)

K-Flex

(732) KYB Europe GmbH
(511) 12

(111) 1075598
(151) 11.04.2011.
(540)

FKG

(732) Wenling Huanyu Bearing Co., Ltd.
(511) 07

(111) 1075618
(151) 25.03.2011.
(540)

**CALPRIMUM 500**

(732) DEBREGEAS ET ASSOCIES PHARMA
(511) 05

(111) 1075621
(151) 04.03.2011.
(540)

**Sicore**

(732) Siemens Aktiengesellschaft
(511) 09 37 42

(111) 1075639
(151) 02.12.2010.
(540)

MineralDent

(732) STS HOLDING GRUP OOD
(511) 03 05 21

(111) 1075644
(151) 01.04.2011.
(540)

STYLISTIC

(732) FUJITSU LIMITED
(511) 09

(111) 1075648
(151) 06.04.2011.
(540)

**Caramba**

(732) Caramba Holding GmbH
(511) 01 02 03 04 05

(111) 1075652
(151) 02.03.2011.
(540)

(732) WERA NOVA s.r.o.
(511) 29 30

(111) 1075678
(151) 28.03.2011.
(540)

**StealthMan**

(732) "StealthMan" AD
(511) 09 18 35

(111) 1075689
(151) 13.10.2010.
(540)

**Tortenguss fix**

(732) Dr. August Oetker Nahrungsmittel KG
(511) 29 30

(111) 1075712
(151) 09.03.2011.
(540)

**ARNOVA**

(732) ARCHOS S.A.
(511) 09 38 41

(111) 1075716
(151) 29.03.2011.
(540)

**Skrill**

(732) Moneybookers Ltd.
(511) 35 36 38

(111) 1075736
(151) 13.04.2011.
(540)

TaiLG

(732) SHENZHEN SHENLING CAR CO., LTD.
(511) 12

(111) 1075756
(151) 14.03.2011.
(540)

ARMANI
Hotels & Resorts

(732) Giorgio ARMANI S.P.A., Milan, Swiss Branch Mendrisio
(511) 43 44

(111) 1075763
(151) 22.01.2011.
(540)

THE MERCH REPUBLIC

(732) The Merch Republic GmbH
(511) 09 16 25 35 38 41

(111) 1075765
(151) 04.03.2011.
(540)

**JUICY VITA**

(732) JAMNICA d.d.
(511) 05 32

(111) 1075779
(151) 19.04.2011.
(540)

ST. NICOLAUS

(732) St. Nicolaus a.s.
(511) 02 30 32 33

(111) 1075782
(151) 19.04.2011.
(540)

ST. NICOLAUS 1867 DISTILLERY

(732) St. Nicolaus a.s.
(511) 02 30 32 33

(111) 1075791
(151) 17.02.2011.
(540)

Aster

(732) MA
(511) 25

(111) 1075792
(151) 17.02.2011.
(540)

(732) MA
(511) 25

(111) 1075804
(151) 24.08.2010.
(540)

**VDDI**

(732) Verband der Deutschen Dental-Industrie e.V.
(511) 09 16 35 36 41 42 44 45

(111) 1075819
(151) 30.03.2011.
(540)

**C-TEX**

(732) AFIT, d.o.o.
(511) 25

(111) 1075830
(151) 18.04.2011.
(540)

(732) NATURANA Carl Dölker GmbH & Co KG
(511) 25

(111) 1075834
(151) 10.03.2011.
(540)

**MULTI-FLUX**

(732) LAICA S.p.A.
(511) 11

(111) 1075848
(151) 14.10.2010.
(540)

**O2**

(732) O2 Holdings Limited
(511) 09 38 41 42

(111) 1075882
(151) 11.04.2011.
(540)

HAIDA

(732) SICHUAN TYRE & RUBBER CO., LTD.
(511) 12

(111) 1075899
(151) 06.04.2011.
(540)

**TECTANET**

(732) BASF SE
(511) 05 22

(111) 1075908
(151) 18.02.2011.
(540)

Uvijek među prijateljima

(732) Industrija piva i sokova "Trebjesa" AD Nikšić
(511) 32 35

(111) 1075917
(151) 18.02.2011.
(540)

Nikšičko PIVO

(732) Industrija piva i sokova "Trebjesa" AD Nikšić
(511) 32 35

(111) 1075922
(151) 28.09.2010.
(540)

**ALULINE**

(732) MESSER GROUP GmbH
(511) 01 04

(111) 1075923
(151) 28.09.2010.
(540)

**INOXLINE**

(732) MESSER GROUP GmbH
(511) 01 04

(111) 1075926
(151) 07.04.2011.
(540)

HYGENIUS

(732) MERKAS TEKSTİL SANAYİ VE TİCARET ANONİM ŞİRKETİ
(511) 24

(111) 1075962
(151) 16.12.2010.
(540)

www.njuskalo.hr
GLAVNA NJUŠKA MEĐU OGLASNICIMA

(732) Njuškalo d.o.o.
(511) 09 25 35 38 41

(111) 1075972
(151) 13.01.2011.
(540)

Responsibility

(732) DPD Dynamic Parcel Distribution GmbH & Co. KG
(511) 39

(111) 1075977
(151) 21.02.2011.
(540)

**IGSS**

(732) 7-Technologies A/S
(511) 09 37 42

(111) 1075978
(151) 21.02.2011.
(540)

**7-TECHNOLOGIES**

(732) 7-Technologies A/S
(511) 09 37 42

(111) 1075979
(151) 21.02.2011.
(540)

**AQUIS**

(732) 7-Technologies A/S
(511) 09 37 42

(111) 1075980
(151) 21.02.2011.
(540)

**TERMIS**

(732) 7-Technologies A/S
(511) 09 37 42

(111) 1075981
(151) 15.02.2011.
(540)

(732) CEMEX Hrvatska d.d.
(511) 19 35

(111) 1075982
(151) 15.02.2011.
(540)

(732) CEMEX Hrvatska d.d.
(511) 19 35

(111) 1075994
(151) 01.04.2011.
(540)

**ХУТОРОК**

(732) U.T.C. LLC
(511) 33

(111) 1058631
(151) 24.09.2010.
(540)

(732) FUZHOU F&V PHOTOGRAPHIC EQUIPMENT CO., LTD.
(511) 09 11

(111) 1064175
(151) 23.12.2010.
(540)

**BETNESOL**

(732) DEFIANTE FARMACÊUTICA S.A.
(511) 05

(111) 1076014
(151) 07.03.2011.
(540)

(732) DUKAT d.d.
(511) 29 30 32

(111) 1076015
(151) 07.03.2011.
(540)

(732) DUKAT d.d.
(511) 29 30 32

(111) 1076054
(151) 27.01.2011.
(540)

**Legios**

(732) LOSTR GROUP a.s.
(511) 06 07 12 19 37 39

(111) 1076055
(151) 28.01.2011.
(540)

(732) Obshchestvo s ogranichennoy otvetstvennostyu "Liga Grupp"
(511) 07 09 12

(111) 1076072
(151) 15.03.2011.
(540)

(732) GOLDEN LADY COMPANY S.p.A.
(511) 05 24 25

(111) 1076093
(151) 13.01.2011.
(540)

(732) OBSCHESTVO S OGRANICHENNOY OTVETSTVENNOSTYU "ARLINE"
(511) 04 12 35

(111) 1076096
(151) 18.03.2011.
(540)

(732) ACTIU BERBEGAL Y FORMAS, S.A.
(511) 20 35

(111) 1076110
(151) 25.01.2011.
(540)

ПРОДВИГАЯ ЭНЕРГИЮ

(732) OJSC Zarubezhenergoproekt
(511) 37 42

(111) 1076111
(151) 25.01.2011.
(540)

ADVANCING ENERGY

(732) OJSC Zarubezhenergoproekt
(511) 37 42

(111) 1076152
(151) 24.03.2011.
(540)

**SIBERRY**

(732) OBSCHESTVO S OGRANICHENNOY OTVETSTVENNOSTYU "SPLAT-COSMETICA"
(511) 03

(111) 1076173
(151) 31.12.2010.
(540)

(732) TOP AUTOMAZIONI S.R.L.
(511) 07

(111) 1076174
(151) 22.12.2010.
(540)

POWER HT

(732) BAXI S.P.A.
(511) 11

(111) 1076176
(151) 27.01.2011.
(540)

(732) SKYY SPIRITS, LLC
(511) 32 33 43

(111) 1076184
(151) 25.01.2011.
(540)

(732) OJSC Zarubezhenergoproekt
(511) 37 42

(111) 1076186
(151) 23.02.2011.
(540)

(732) GE.MA.R SRL
(511) 28

(111) 1076192
(151) 26.03.2011.
(540)

**VISIOMER MADAME**

(732) Evonik Röhm GmbH
(511) 01 42

(111) 1076193
(151) 09.03.2011.
(540)

**Ivoclean**

(732) Ivoclar Vivadent AG
(511) 05

(111) 1076198
(151) 11.04.2011.
(540)

**WILFACTIN**

(732) Laboratoire Français du Fractionnement et des Biotechnologies
(511) 05 10 42

(111) 1076200
(151) 13.04.2011.
(540)

**OMNISTACK**

(732) ALCATEL-LUCENT USA INC.
(511) 09

(111) 1076208
(151) 13.04.2011.
(540)

(732) YANG WEIREN
(511) 25

(111) 1076210
(151) 24.03.2011.
(540)

(732) MARELLA S.R.L.
(511) 18 25

(111) 1076211
(151) 15.04.2011.
(540)

**PERGONAL**

(732) Ares Trading S.A.
(511) 05

(111) 1076215
(151) 07.03.2011.
(540)

(732) KARTELL S.p.A.
(511) 09 10 11 20 21

(111) 1076229
(151) 05.04.2011.
(540)

**DORZOL**

(732) JADRAN GALENSKI LABORATORIJ D.D. RIJEKA
(511) 05

(111) 1076230
(151) 05.04.2011.
(540)

**GLAUMAX**

(732) JADRAN GALENSKI LABORATORIJ D.D. RIJEKA
(511) 05

(111) 1076232
(151) 12.04.2011.
(540)

**404**

(732) Blaser Finanzholding GmbH
(511) 13 25 28

(111) 1076245
(151) 31.03.2011.
(540)

(732) VALMAR d.o.o.
(511) 11 30 35

(111) 1076253
(151) 09.01.2011.
(540)

(732) DKV EURO SERVICE GmbH & Co. KG
(511) 16 35 36 37 38 39 41 42 43 45

(111) 1076260
(151) 07.03.2011.
(540)

(732) DUKAT d.d.
(511) 29 30 32

(111) 1076263
(151) 04.04.2011.
(540)

**FLOWERTAG**

(732) KENZO SA
(511) 03

(111) 1076301
(151) 24.03.2010.
(540)

(732) MEPA MOBİLYA YA GEREÇLERİ SANAYİ VE TİCARET LİMİTED ŞİRKETİ
(511) 06 19 20

(111) 1076306
(151) 09.11.2010.
(540)

(732) VALEX SPA
(511) 01 03 06 07 08 09 11 12 14 16 17 18 19 20 21 22 24 25 28

(111) 1076350
(151) 26.04.2011.
(540)

**IMNOVID**

(732) Celgene Corporation
(511) 05

(111) 1076356
(151) 11.11.2010.
(540)

(732) KRAŠ, prehrambena industrija d.d.
(511) 30

(111) 1076372
(151) 26.01.2011.
(540)

(732) AXO GROUP S.R.L.
(511) 07 12 35

(111) 1076377
(151) 26.01.2011.
(540)

**VANTRA**

(732) HANKOOK TIRE CO., LTD.
(511) 12

(111) 1076393
(151) 15.02.2011.
(540)

(732) CEMEX Hrvatska d.d.
(511) 06 19 35 37 39

(111) 1076406
(151) 03.03.2011.

(540)

**LIBERTA**

(732) RAUTARUUKKI OYJ
(511) 06 19 37

(111) 1076411
(151) 04.11.2010.
(540)

(732) UPIM S.r.l.
(511) 03 04 08 11 14 16 20 21 22 24 25 26 27 28 35

(111) 1076413
(151) 30.03.2011.
(540)

(732) Photon Energy a.s.
(511) 07 09 40

(111) 1076431
(151) 26.04.2011.
(540)

(732) MAGIC PRODUCTION GROUP (M.P.G.) SA
(511) 09 16 28 30 35 38 41

(111) 1076433
(151) 16.03.2011.
(540)

**MOTY**

(732) Kröpfel Landmaschinen GmbH
(511) 07 08 35

(111) 1076435
(151) 11.03.2011.
(540)

(732) Dooshion Garment Co., Ltd
(511) 18 25 35

(111) 1076481
(151) 03.12.2010.
(540)

(732) TSZ GmbH
(511) 03 05 35 44

(111) 1076483
(151) 24.11.2010.
(540)

(732) SPARKLING SPRING OY
(511) 07 11 43

(111) 1076490
(151) 04.01.2011.
(540)

(732) GRUPA LOTOS SPÓŁKA AKCYJNA
(511) 04

(111) 1076503
(151) 11.02.2011.
(540)

(732) Nathalie Löffler
(511) 09 16 35 41

(111) 1076530
(151) 09.03.2011.
(540)

(732) Zakłady Tłuszczowe "Kruszwica" S.A.
(511) 29

(111) 1076531
(151) 09.03.2011.
(540)

(732) Zakłady Tłuszczowe "Kruszwica" S.A.
(511) 29

(111) 1076534
(151) 30.03.2011.
(540)

(732) INTERNATIONAL TAEKWON-DO FEDERATION-ITF
(511) 25 28 41

(111) 1076543
(151) 24.12.2010.
(540)

**Miorre**

(732) AVRUPA TEKSTİL İÇ VE DIŞ TİCARET LİMİTED ŞİRKETİ
(511) 25 35

(111) 1076545
(151) 28.02.2011.
(540)

(732) CONG TY CO PHAN THUC PHAM SUA TH
(511) 29

(111) 1076552
(151) 26.01.2011.
(540)

**PALL**

(732) Pall Corporation
(511) 06 09 10 11

(111) 1076553
(151) 22.03.2011.
(540)

(732) SOCIETE EUROPEENNE DE CARDIOLOGIE
(511) 35 38 41 42

(111) 1076560
(151) 01.04.2011.
(540)

(732) ITM ENTREPRISES Société par actions simplifiée
(511) 03 08 16

(111) 1076564
(151) 11.11.2010.
(540)

**FRONDI**

(732) KRAŠ, prehrambena industrija d.d.
(511) 30 32 33

(111) 1076581
(151) 26.11.2010.
(540)

**Yource**

(732) BRITA GmbH
(511) 05 07 11 21 32

(111) 1076586
(151) 13.04.2011.
(540)

**DARYLIA**

(732) RICHTER GEDEON NYRT.
(511) 05

(111) 1076591
(151) 24.03.2011.
(540)

(732) MEGGLE Hrvatska d.o.o.
(511) 29 30 32

(111) 1076598
(151) 14.04.2011.
(540)

**96 HOURS**

(732) ZHUANG WAN ZHEN
(511) 25

(111) 1076635
(151) 15.02.2011.

(540)

(732) CEMEX Hrvatska d.d.
(511) 19

(111) 1076636
(151) 15.02.2011.
(540)

(732) CEMEX Hrvatska d.d.
(511) 19

(111) 1076637
(151) 15.02.2011.
(540)

(732) CEMEX Hrvatska d.d.
(511) 19

(111) 1076638
(151) 15.02.2011.

(540)

(732) CEMEX Hrvatska d.d.
(511) 19

(111) 1076651
(151) 13.04.2011.
(540)

(732) GUANGDONG BOBAOLAN FASHION STOCK CO., LTD.
(511) 25

(111) 1076681
(151) 19.04.2011.
(540)

**CELLMAX**

(732) CellMax Technologies AB
(511) 09

(111) 1076690
(151) 29.04.2011.
(540)

**HOMEPARTY**

(732) JIANGMEN KINWAI FURNITURE & DECORATION CO., LTD.
(511) 20

(111) 1076697
(151) 08.04.2011.
(540)

**KUHN CENTER**

(732) KUHN S.A.
(511) 07

(111) 1076707
(151) 10.02.2011.

(540)

**ASTROLABIO**

(732) BRUGI SPA CREAZIONI SPORTIVE
(511) 18 24 25

(111) 1076726
(151) 07.01.2011.
(540)

**NORMAPREN**

(732) NORMA Germany GmbH
(511) 01 17

(111) 1047373
(151) 09.06.2010.
(540)

(732) AQUAFIL S.P.A.
(511) 01 17 22 23

(111) 1048320
(151) 26.03.2010.
(540)

(732) FULGAR S.p.A.
(511) 22 23 25

(111) 1056336
(151) 15.10.2010.
(540)

**TROSEPLA**

(732) Millennium Pharmaceuticals, Inc.
(511) 05

(111) 1060137
(151) 25.10.2010.
(540)

**INTELLIGENT HYBRID**

(732) Automobili Lamborghini Holding S.p.A.
(511) 09 11 12

(111) 1060351
(151) 22.11.2010.

(540)

**XPECT**

(732) Novozymes A/S,
(511) 01

(111) 1076759
(151) 17.02.2011.
(540)

**ECAUTO POWER**

(732) ITM ENTREPRISES Société par actions simplifiée
(511) 03 04 05 06 07 09 11 12 20 21 27

(111) 1076761
(151) 08.04.2011.
(540)

(732) ASSYSTEM
(511) 35 36 37 42

(111) 1076764
(151) 21.03.2011.
(540)

(732) Société des Produits Nestlé S.A.
(511) 05 10 16 29 30 32 41 42 44

(111) 1076779
(151) 23.02.2011.
(540)

(732) NVS Technologies AG
(511) 09 38 42

(111) 1076787
(151) 19.04.2011.
(540)

(732) Concept Fresh Vertriebsgesellschaft mbH
(511) 29 30 31 32 33

(111) 1076797
(151) 25.05.2010.
(540)

(732) NIKKISO CO., LTD.
(511) 07 09 10 11 12 37 42

(111) 1076807
(151) 05.04.2011.
(540)

**INITIAL ANCHOR THREAD**

(732) Friadent GmbH
(511) 10

(111) 1076810
(151) 19.10.2010.
(540)

**Cool Bubble**

(732) Kuhne Anlagenbau GmbH
(511) 07 09 16 42

(111) 1076815
(151) 29.12.2008.
(540)

**YO FA**

(732) TIANJIN YOU FA STEEL PIPE GROUP CO., LTD.
(511) 06 17 19

(111) 1076817
(151) 19.04.2011.
(540)

**MISSION CONTROL**

(732) Apple Inc.
(511) 09

(111) 1076818
(151) 20.04.2011.
(540)

**LAUNCHPAD**

(732) Apple Inc.
(511) 09

(111) 1076824
(151) 25.04.2011.
(540)

**INVISIBLE NASTIES**

(732) Colgate-Palmolive Company
(511) 21

(111) 1076837
(151) 12.05.2011.
(540)

**ROAD RIDER**

(732) Dynamic Tire Corp.
(511) 12

(111) 1076838
(151) 12.05.2011.
(540)

**DYNAMAXX**

(732) Dynamic Tire Corp.
(511) 12

(111) 1076840
(151) 19.10.2010.
(540)

**FOCUSTAC**

(732) Papyrus AB
(511) 16

(111) 1076852
(151) 23.02.2011.
(540)

**PremiVent**

(732) profine GmbH
(511) 06 11 19

(111) 1076864
(151) 21.03.2011.
(540)

(732) Rapool-Ring GmbH Qualitätsraps deutscher Züchter
(511) 31 42 44

(111) 1076868
(151) 25.03.2011.
(540)

(732) REPLY S.P.A.
(511) 09 16 35 38 42

(111) 1076879
(151) 16.03.2011.
(540)

(732) Slovenska knjiga, d.o.o.
(511) 09 16 35

(111) 1076883
(151) 14.04.2011.
(540)

**PURPEN**

(732) TKK Proizvodnja kemičnih izdelkov Srpenica ob Soči d.d.
(511) 19

(111) 1076891
(151) 04.04.2011.
(540)

(732) DKV Globality S.A.
(511) 05 10 35 36 38 39 41 44 45

(111) 1076899
(151) 19.01.2011.
(540)

كرس- تايل
CRYS-tile

(732) Cristal Asfour International
(511) 21 35

(111) 1076901
(151) 29.11.2010.

(540)

(732) KAPCI COATINGS (Mohamed Ahmed El Sayed & Partners)
(511) 02

(111) 1076906
(151) 05.01.2011.
(540)

(732) Dimitar Hristov BALEV
(511) 03 05

(111) 1076912
(151) 28.12.2010.
(540)

(732) Metsä Tissue Oyj
(511) 06 16

(111) 1076915
(151) 10.02.2011.
(540)

(732) IVECO S.p.A.
(511) 12 16 18 25 37

(111) 1076916
(151) 10.01.2011.
(540)

**ACTIVITA**

(732) Activita GmbH
(511) 03 05 16 29 30 41

(111) 1076917
(151) 26.01.2011.
(540)

(732) RORO GmbH - R. Rott
(511) 06 09 11 19 20 35 37

(111) 1076924
(151) 14.02.2011.
(540)

(732) Böhmer GmbH
(511) 07

(111) 1076943
(151) 01.04.2011.
(540)

**THOMIT**

(732) CeramTec GmbH
(511) 01

(111) 1076968
(151) 27.04.2011.
(540)

(732) WU ZHIZHONG
(511) 25

(111) 1076970
(151) 15.04.2011.
(540)

**SCHLUMBERGER ROSE SECCO**

(732) Schlumberger Wein- und Sektkellerei GmbH
(511) 33

(111) 1077004
(151) 16.02.2011.
(540)

(732) Veyx-Pharma GmbH
(511) 03 05 31

(111) 1077013
(151) 25.01.2011.
(540)

**Karanto**

(732) KARANTO Corrosion Protection Technologies GmbH
(511) 01 02 37 40 42

(111) 1077031
(151) 09.11.2010.
(540)

**MKM MARKETING INSTITUTE**

(732) MKM Marketing Institute GmbH
(511) 09 16 35 41 42 44 45

(111) 1077049
(151) 17.02.2011.
(540)

Кауфланд

(732) Kaufland Warenhandel GmbH & Co. KG
(511) 03 04 05 06 07 08 09 10 11 12 14 15 16 17 18 20 21 22 24 25 26 27 28 29 30 31 32 33 34 35 36 37 38 39 40 41 42 43 44

(111) 1077054
(151) 27.04.2011.
(540)

(732) BEIQI FOTON MOTOR CO., LTD.
(511) 12 35

(111) 1077059
(151) 08.02.2011.
(540)

(732) NORMA Germany GmbH
(511) 06 17

(111) 1077065
(151) 14.12.2010.

(540)

(732) INTERNATIONAL TASTE & QUALITY INSTITUTE en abrégé iTQi
(511) 29 30 32 33

(111) 1077071
(151) 07.02.2011.
(540)

**PAUL'S BOUTIQUE**

(732) Paul's Boutique Ltd
(511) 03 14 18 25

(111) 1077092
(151) 31.03.2011.
(540)

**Rehab**

(732) Zakrytoe aktsionernoe obshchestvo "Alfa-Medika"
(511) 10

(111) 1077104
(151) 18.04.2011.
(540)

**ABRIZYL**

(732) NOVARTIS AG
(511) 05

(111) 1077111
(151) 18.03.2011.
(540)

**OMFA**

(732) Technical Textiles, s.r.o.
(511) 17

(111) 1077124
(151) 30.03.2011.

(540)

(732) GRANDVISION FRANCE
(511) 09 35 44

(111) 1077131
(151) 07.04.2011.
(540)

**TOVEL ENTRY**

(732) Checkpoint Systems International GmbH
(511) 16 24

(111) 1077145
(151) 26.04.2011.
(540)

**GALIBIER**

(732) Bugatti International S.A.
(511) 12 25 28

(111) 1077149
(151) 30.12.2010.
(540)

**MARVILLE**

(732) CLAUDIO BUSILLO
(511) 03 09 12 14 16 18 20 25 28 43

(111) 1077155
(151) 20.04.2011.
(540)

APARTAV

(732) APART International GmbH
(511) 03 09 14 16 25 35

(111) 1077156
(151) 08.04.2011.
(540)

Clean & Clear and confident

(732) Janssen Pharmaceutica NV
(511) 03 05 16 21

(111) 1077162
(151) 27.04.2011.

(540)

(732) BOBITA Co d.o.o. ČITLUK
(511) 33

(111) 1077168
(151) 01.04.2011.
(540)

**PORMULIT**

(732) CeramTec GmbH
(511) 01

(111) 1077169
(151) 01.04.2011.
(540)

**DIMULIT**

(732) CeramTec GmbH
(511) 01

(111) 1077183
(151) 28.02.2011.
(540)

(732) KAUFLAND ČESKÁ REPUBLIKA v.o.s.
(511) 29

(111) 1077208
(151) 08.02.2011.
(540)

(732) MEGGLE AG
(511) 29 30 32

(111) 1077219
(151) 16.03.2011.

(540)

**P&G PROUD SPONSOR OF MOMS**

(732) Procter & Gamble International Operations SA
(511) 03 05 08 09 16 21 29 31 35

(111) 1077237
(151) 15.04.2011.
(540)

(732) HAVANA CLUB HOLDING S.A.
(511) 33

(111) 1077244
(151) 08.04.2011.
(540)

**ETERNAL**

(732) Forbo Financial Services AG
(511) 27

(111) 1077252
(151) 31.03.2011.
(540)

(732) GLORIA SRL
(511) 25

(111) 1077258
(151) 07.04.2011.
(540)

ШТРУМПФОВИ

(732) STUDIO PEYO S.A.
(511) 03 09 14 16 18 21 24 25 28 29 30 32 35 41

(111) 1077270
(151) 10.11.2010.

(540)

(732) KAPCI COATINGS (Mohamed Ahmed El Sayed & Partners)
(511) 02

(111) 1077295
(151) 15.02.2011.
(540)

strukto

(732) CEMEX Hrvatska d.d.
(511) 06 19 35 37 39

(111) 1077296
(151) 15.02.2011.
(540)

DALMACIJACEMENT
strukto

(732) CEMEX Hrvatska d.d.
(511) 06 19 35 37 39

(111) 1077297
(151) 15.02.2011.
(540)

optimo

(732) CEMEX Hrvatska d.d.
(511) 06 19 35 37 39

(111) 1077316
(151) 18.04.2011.
(540)

(732) Chocoladefabriken Lindt & Sprüngli AG
(511) 30

(111) 1077326
(151) 01.02.2011.
(540)

**Alipure**

(732) AlzChem Trostberg GmbH
(511) 03 05

(111) 1077334
(151) 23.03.2011.
(540)

ARTEUS CAPITAL

(732) Arteus Capital Hungary Korlátolt Felel ?sségü Társaság
(511) 14 36

(111) 1077338
(151) 23.03.2011.
(540)

VORTEX

(732) Deutsche Vortex GmbH & Co. KG
(511) 07 11

(111) 1077339
(151) 27.04.2011.
(540)

KINGRUN

(732) DONGFENG MOTOR CO., LTD.
(511) 12 37

(111) 1077341
(151) 23.03.2011.
(540)

BLUEONE

(732) Deutsche Vortex GmbH & Co. KG
(511) 07 11

(111) 1077346
(151) 05.02.2010.
(540)

terranova

(732) ROSENRUIST - GESTÃO E SERVIÇOS, LDA.
(511) 18 25 35

(111) 1077367
(151) 07.02.2011.
(540)

I ♥ PB

(732) Paul's Boutique Ltd
(511) 03 14 18 25

(111) 1077385
(151) 25.03.2011.
(540)

(732) AGAPE S.R.L.
(511) 11 20 21

(111) 1077396
(151) 21.04.2011.
(540)

**TALASCEND**

(732) Talascend, LLC
(511) 35

(111) 1077401
(151) 23.03.2011.
(540)

ОЗЗИОН

(732) Zentiva, k.s.
(511) 05

(111) 1077404
(151) 21.04.2011.
(540)

Susino

(732) SUSINO UMBRELLA CO., LTD.
(511) 09 14 25

(111) 1077405
(151) 07.04.2011.
(540)

**BARILLA**

(732) Barilla G. e R. Fratelli - Società per Azioni
(511) 29 30 31 32 33 35 41 42 43

(111) 1077412
(151) 24.03.2011.
(540)

**SPLAT DREAM**

(732) OBSCHESTVO S OGRANICHENNOY OTVETSTVENNOSTYU "SPLAT-COSMETICA"
(511) 03

(111) 1077418
(151) 13.04.2011.
(540)

(732) PRENATAL S.P.A.
(511) 03 08 09 10 11 12 16 18 20 21 24 25 41

(111) 1077421
(151) 12.04.2011.
(540)

Арлеверт

(732) Hennig Arzneimittel GmbH & Co. KG
(511) 05

(111) 1077430
(151) 07.04.2011.
(540)

[3D] MEN SION

(732) Henkel AG & Co. KGaA
(511) 03

(111) 1077442
(151) 24.03.2011.
(540)

**HELVETAS SWISS INTERCOOPERATION**

(732) Helvetas, Schweizer Gesellschaft für internationale Zusammenarbeit
(511) 09 16 35 36 41 42 44 45

(111) 1077486
(151) 15.04.2011.
(540)

**NUIT BLANCHE**

(732) YVES SAINT LAURENT PARFUMS S.A.S.
(511) 03

(111) 1077552
(151) 09.03.2011.
(540)

**Creativity Lucertola**

(732) TUZ KONFEKSİYON SANAYİ VE DIŞ TİCARET LİMİTED ŞİRKETİ
(511) 25

(111) 1077566
(151) 15.04.2011.
(540)

VEUVE CLICQUOT

(732) MHCS
(511) 21 32 33

(111) 1076707
(151) 10.02.2011.
(540)

**ASTROLABIO**

(732) BRUGI SPA CREAZIONI SPORTIVE
(511) 18 24 25

(111) 1077582
(151) 08.02.2011.

(540)

(732) BP Europa SE
(511) 01 04 37

(111) 1077590
(151) 16.03.2011.
(540)

(732) GRANDS MOULINS DE PARIS
(511) 30

(111) 1077601
(151) 16.02.2011.
(540)

(732) NEUTEC ILAC SANAYI TICARET ANONIM SIRKETI
(511) 05 42

(111) 1077605
(151) 12.04.2011.
(540)

(732) CAZZOLA GAETANO
(511) 25

(111) 1077606
(151) 08.03.2011.
(540)

(732) GAMET BUSINESS DEVELOPMENT Spółka z ograniczoną odpowiedzialnością Spółka Komandytowa
(511) 06

(111) 1077629
(151) 12.05.2011.
(540)

(732) ChangZhou GuangMing Light Bulb Co., Ltd.
(511) 11

(111) 1077634
(151) 01.03.2011.
(540)

**RELAXOLIN**

(732) bellicon AG
(511) 18 20 24

(111) 1077647
(151) 13.04.2011.
(540)

(732) INTERNATIONAL TAEKWON-DO FEDERATION-ITF
(511) 25 28 41

(111) 1077663
(151) 28.07.2010.
(540)

(732) Arrow Electronics, Inc.
(511) 35 39 40

(111) 1077683
(151) 28.06.2010.
(540)

**PEARL**

(732) Pearl Agency Allgemeine Vermittlungsgesellschaft mbH
(511) 28 35 39

(111) 1077684
(151) 08.06.2010.

(540)

(732) Albert Kerbl GmbH
(511) 02 03 04 05 06 07 08 09 10 11 16 17 18 19 20 21 22 24 25 28 31 35

(111) 1077689
(151) 01.10.2010.
(540)

**APOVERDE**

(732) dm-drogerie markt GmbH + Co. KG
(511) 03 05 10 29 30 32

(111) 1077701
(151) 04.01.2011.
(540)

(732) YUYAO VISTAR ELECTRONIC SCIENCE & TECHNOLOGY CO., LTD.
(511) 09

(111) 1077702
(151) 04.01.2011.
(540)

(732) BOSUN TOOLS CO., LTD
(511) 07

(111) 1077714
(151) 26.01.2011.
(540)

(732) FRANCK d.d.
(511) 21 30

(111) 1077719
(151) 16.02.2011.
(540)

**URBANATHLON**

(732) Rodale Inc.
(511) 16 41

(111) 1077735
(151) 27.01.2011.
(540)

(732) Konrad Friedrichs GmbH & Co. KG
(511) 06

(111) 1077737
(151) 25.02.2011.
(540)

**Ihdent**

(732) Dr. Ihde Dental AG
(511) 03 05 10

(111) 1077750
(151) 03.02.2011.
(540)

**SIDRETA**

(732) Zentiva, k.s.
(511) 05

(111) 1077757
(151) 30.03.2011.
(540)

(732) POSLOVNI SISTEM MERCATOR, d.d.
(511) 01 02 03 04 05 06 08 11 14 16 17 18 20 21 22 23 24 25 26 27 28 29 30 31 32 33 34

(111) 1077758
(151) 03.03.2011.
(540)

(732) POSLOVNI SISTEM MERCATOR, d.d.
(511) 01 02 03 04 05 06 08 11 14 16 17 18 20 21 22 23 24 25 26 27 28 29 30 31 32 33 34

(111) 1077759
(151) 30.03.2011.
(540)

(732) POSLOVNI SISTEM MERCATOR, d.d.
(511) 01 02 03 04 05 06 08 11 14 16 17 18 20 21 22 23 24 25 26 27 28 29 30 31 32 33 34

(111) 1077760
(151) 30.03.2011.
(540)

(732) POSLOVNI SISTEM MERCATOR, d.d.
(511) 01 02 03 04 05 06 08 11 14 16 17 18 20 21 22 23 24 25 26 27 28 29 30 31 32 33 34

(111) 1077761
(151) 30.03.2011.
(540)

(732) POSLOVNI SISTEM MERCATOR, d.d.
(511) 01 02 03 04 05 06 08 11 14 16 17 18 20 21 22 23 24 25 26 27 28 29 30 31 32 33 34

(111) 1077782
(151) 30.03.2011.
(540)

(732) GUSTAV KÄSER GMBH
(511) 16 41

(111) 1077783
(151) 08.03.2011.
(540)

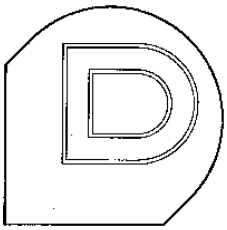

(732) Duktus S.A.
(511) 06 40 42

(111) 1077790
(151) 27.04.2011.
(540)

(732) SHANGYU CITY XINGBAO UMBRELLA INDUSTRY CO., LTD.
(511) 18

(111) 1077808
(151) 30.03.2011.
(540)

**IPPOPOTAMO**

(732) ZANINI RISTORAZIONE S.r.l.
(511) 43

(111) 1077815
(151) 10.05.2011.
(540)

(732) Yi Wu New Green Biological Engineering Co., Ltd.
(511) 09 11 42

(111) 1077832
(151) 13.05.2011.
(540)

(732) TIANJIN UNITED TIRE & RUBBER INTERNATIONAL CO., LTD.
(511) 12

(111) 1077833
(151) 21.04.2011.
(540)

(732) Obschestvo s ogranichennoi otvetstvennostiy "SPLAT-KOSMETIKA"
(511) 03

(111) 1077838
(151) 18.03.2011.
(540)

**Berrydise**

(732) Anton Riemerschmid Weinbrennerei und Likörfabrik GmbH & Co. KG
(511) 30 32 33

(111) 1077849
(151) 24.02.2011.
(540)

**VixaStar**

(732) SANOFI-AVENTIS
(511) 10

(111) 1077850
(151) 24.02.2011.
(540)

**JuniorStar**

(732) SANOFI-AVENTIS
(511) 10

(111) 1077852
(151) 24.02.2011.
(540)

**JoyStar**

(732) SANOFI-AVENTIS
(511) 10

(111) 1077857
(151) 11.03.2011.
(540)

**TERICOVE**

(732) SANOFI-AVENTIS
(511) 05

(111) 1077867
(151) 23.12.2010.
(540)

(732) tesa SE
(511) 01 06 16 17 19 26

(111) 1077877
(151) 20.01.2011.
(540)

(732) SAOP računalništvo d.o.o.
(511) 09 16 41

(111) 1077878
(151) 14.04.2011.
(540)

**ELECTRIX**

(732) ELEKTRIK EOOD
(511) 09 11 35

(111) 1077909
(151) 19.01.2011.
(540)

**BILO KUDA KIKI SVUDA**

(732) KRAŠ, prehrambena industrija, d.d.
(511) 16 30 35

(111) 1077910
(151) 19.01.2011.
(540)

**DORINA - UVIJEK TAKO DOBRA**

(732) KRAŠ, prehrambena industrija, d.d.
(511) 30 35

(111) 1077911
(151) 19.01.2011.

(540)

**KRAŠ EXPRESS, UJUTRO ZA DOBAR DAN - UVEČER ZA DOBAR SAN**

(732) KRAŠ, prehrambena industrija, d.d.
(511) 16 30 35

(111) 1077912
(151) 19.01.2011.
(540)

**BAJADERA - ČAROLIJA VRHUNSKOG UŽITKA**

(732) KRAŠ, prehrambena industrija, d.d.
(511) 30

(111) 1077913
(151) 19.01.2011.
(540)

**ŽIVOTINJSKO CARSTVO**

(732) KRAŠ, prehrambena industrija, d.d.
(511) 16 30 32

(111) 1077914
(151) 19.01.2011.
(540)

**ESCURA**

(732) KRAŠ, prehrambena industrija d.d.
(511) 30 32 33

(111) 1077915
(151) 19.01.2011.
(540)

**SA CRTOM**

(732) KRAŠ, prehrambena industrija d.d.
(511) 30

(111) 1077916
(151) 19.01.2011.
(540)

(732) KRAŠ, prehrambena industrija d.d.
(511) 30

(111) 1077928
(151) 16.03.2011.
(540)

Rēvo

(732) LUXOTTICA GROUP S.p.A.
(511) 09

(111) 1077990
(151) 28.04.2011.
(540)

**OUTOX, The Safety Drink**

(732) OUTOX International, société anonyme
(511) 25 30 32

(111) 1078009
(151) 11.03.2011.
(540)

assystem

(732) ASSYSTEM
(511) 35 36 37 42

(111) 1078015
(151) 16.03.2011.
(540)

URO Protect

(732) Toruńskie Zakłady Materiałów Opatrunkowych, Spółka Akcyjna
(511) 05

(111) 1078016
(151) 25.10.2010.
(540)

KREISEL

(732) HASIT Trockenmörtel GmbH
(511) 01 02 06 07 17 19 37 41

(111) 1078031
(151) 21.02.2011.
(540)

AMOR

(732) AMOR Gummiwaren GmbH
(511) 03 05 10 28

(111) 1078058
(151) 22.11.2010.
(540)

**BOF**

(732) Big Bang, trgovina in storitve, d.o.o.
(511) 07 08 09 11 15 16 35 40 41

(111) 1078068
(151) 21.02.2011.
(540)

**7T**

(732) 7-Technologies A/S
(511) 09 37 42

(111) 1078078
(151) 17.02.2011.
(540)

Silhouette

(732) SILHOUETTE International Schmied AG
(511) 03 14 18 25

(111) 1078093
(151) 01.02.2011.
(540)

Creapure

(732) AlzChem Trostberg GmbH
(511) 01 05

(111) 1078118
(151) 23.03.2011.
(540)

**BLUEONE**

(732) Deutsche Vortex GmbH & Co. KG
(511) 07 11

(111) 1078122
(151) 24.03.2011.
(540)

(732) Great Wall Motor Company Limited
(511) 12 37

(111) 1078124
(151) 05.04.2011.
(540)

**SMART-X**

(732) 3A Composites GmbH
(511) 06 16 17 20

(111) 1078139
(151) 20.10.2010.
(540)

**axentia**

(732) Testrut Service GmbH
(511) 04 06 08 09 11 16 18 20 21 24 26 27 28 35

(111) 1078149
(151) 03.11.2010.
(540)

ПИК – КО
PIC - CO

(732) PIC-CO AD
(511) 01 03 05 16 29 30 31 32 33 35 39

(111) 1078156
(151) 16.12.2010.
(540)

www.njuskalo.hr
GLAVNA NJUŠKA MEĐU OGLASNICIMA

(732) Njuškalo d.o.o.
(511) 09 25 35 38 41

(111) 1078157
(151) 16.12.2010.
(540)

njuskalo.hr

(732) Njuškalo d.o.o.
(511) 09 25 35 38 41

(111) 1078158
(151) 16.12.2010.
(540)

njuškalo

(732) Njuškalo d.o.o.
(511) 09 25 35 38 41

(111) 1078159
(151) 21.12.2010.
(540)

**ZMACK**

(732) ZHERMACK S.P.A.
(511) 01 05

(111) 1078178
(151) 05.01.2011.
(540)

(732) Unilever N.V.
(511) 03

(111) 1078179
(151) 05.01.2011.
(540)

**DOVE DEEPCARE COMPLEX**

(732) Unilever N.V.
(511) 03

(111) 1078183
(151) 18.02.2011.
(540)

(732) POLFA sp. z o.o.
(511) 05 10 35 39

(111) 1078185
(151) 28.02.2011.
(540)

**МОБИВЕН**

(732) HARTFORD MEDICALS s. r. o.
(511) 05 29 30

(111) 1078194
(151) 04.03.2011.
(540)

**Flower Dream**

(732) dm-drogerie markt GmbH + Co. KG
(511) 03 08 21

(111) 1078207
(151) 21.03.2011.
(540)

(732) ACI Adam BV
(511) 09 35 39

(111) 1078208
(151) 21.03.2011.
(540)

(732) ACI Adam BV
(511) 09 35 39

(111) 1078221
(151) 27.04.2011.
(540)

(732) SINOCHEM CORPORATION
(511) 01 02

(111) 1078228
(151) 14.03.2011.
(540)

(732) Win Bright (Asia), Ltd.
(511) 09 14 18 25

(111) 1078233
(151) 11.03.2011.
(540)

**CLASNA**

(732) Beijing Clasna Fashion Co., Ltd.
(511) 18 24 35

(111) 1060278
(151) 20.04.2010.
(540)

(732) ARLİGHT GENEL HİZMET TASARIM ELEKTROMEKANİK İMALAT TAAHHÜT SANAYİ VE TİCARET LİMİTED ŞİRKETİ
(511) 06 09 10 11 19 35

(111) 1064324
(151) 16.09.2010.
(540)

**PIC SOLUTION**

(732) ARTSANA S.P.A.
(511) 03 05 10 11

(111) 1078267
(151) 15.04.2011.
(540)

(732) HAVANA CLUB HOLDING S.A.
(511) 33

(111) 1078273
(151) 29.04.2011.
(540)

**I-SEE**

(732) Volvo Truck Corporation
(511) 09 12

(111) 1078277
(151) 01.04.2011.
(540)

**EHRLE**

(732) Ehrle Reinigungstechnik GmbH
(511) 03 07 09 11 37

(111) 1078303
(151) 04.01.2011.
(540)

**COQUUS**

(732) LUX S.R.L.
(511) 29 30

(111) 1078304
(151) 30.12.2010.
(540)

(732) LUX S.R.L.
(511) 29 30

(111) 1078314
(151) 10.05.2011.
(540)

(732) Georgia-Pacific S.à r.l.
(511) 16

(111) 1078321
(151) 29.09.2010.
(540)

**Шёкк**

(732) Schöck Bauteile GmbH
(511) 06 17 19 37

(111) 1078329
(151) 04.01.2011.
(540)

(732) Chengdu Kanghong Pharmaceuticals Group Co., Ltd.
(511) 05

(111) 1078331
(151) 15.12.2010.
(540)

**AeroMaster Cirrus**

(732) REMAK a.s.
(511) 09 11 35 37 42

(111) 1078338
(151) 09.01.2011.

(540)

(732) DKV EURO SERVICE GmbH & Co. KG
(511) 16 35 36 37 38 39 41 42 43 45

(111) 1078354
(151) 28.03.2011.
(540)

**ATYPIC**

(732) ESSILOR INTERNATIONAL (COMPAGNIE GENERALE D'OPTIQUE)
(511) 09

(111) 1078379
(151) 15.04.2011.
(540)

**IVHEBEX**

(732) LABORATOIRE FRANCAIS DU FRACTIONNEMENT ET DES BIOTECHNOLOGIES
(511) 05

(111) 1078390
(151) 13.04.2011.
(540)

**LIVE FOR GREATNESS**

(732) ROLEX S.A.
(511) 14

(111) 1078405
(151) 11.04.2011.
(540)

**ILUMINE**

(732) MIGUEL TORRES S.A.
(511) 33

(111) 1078412
(151) 07.01.2011.
(540)

**LITTLE RED DRESS**

(732) Avon Products, Inc.
(511) 03

(111) 1078422
(151) 18.04.2011.
(540)

**MOTAXIV**

(732) Ares Trading S.A.
(511) 05

(111) 1078439
(151) 09.02.2011.
(540)

(732) PANG JIANFENG
(511) 11 35 40

(111) 1078453
(151) 19.05.2011.
(540)

**MOTIVYST**

(732) Janssen Pharmaceutica NV
(511) 05

(111) 1078454
(151) 19.05.2011.
(540)

**PROMINAD**

(732) Janssen Pharmaceutica NV
(511) 05

(111) 1078455
(151) 05.05.2011.
(540)

(732) KSK-electro Limited
(511) 11

(111) 1078457
(151) 28.03.2011.
(540)

(732) SKT ELECTRIC MACHINE CO., LTD.
(511) 07 08

(111) 1078458
(151) 02.11.2010.
(540)

**Bemis**

(732) Bemis Company, Inc.
(511) 16 17

(111) 1078467
(151) 18.04.2011.
(540)

(732) 4QY Sp. z o.o.
(511) 03

(111) 1078505
(151) 03.05.2011.
(540)

**Your excellent smile**

(732) OBSCHESTVO S OGRANICHENNOY OTVETSTVENNOSTYU "SPLAT-SOSMETISA"
(511) 03 05 21

(111) 1078537
(151) 23.03.2011.
(540)

(732) STRONG CONSTRUCTION MACHINERY CO., LTD
(511) 07

(111) 1078552
(151) 28.12.2010.
(540)

(732) MULTiPLAN YALITIM SiSTEMLERi TiCARET ANONiM SiRKETi
(511) 01 17 19

(111) 1078594
(151) 02.12.2010.
(540)

**AUDIOSONIC**

(732) Tristar Europe B.V.
(511) 09 14

(111) 1078595
(151) 06.12.2010.
(540)

(732) INTER ON LINE TRADING GROUP INC.
(511) 29 30 35 39 40 43

(111) 1078599
(151) 11.01.2011.
(540)

(732) Reinhold Fleckenstein Jeanswear GmbH Fertigung und Vertrieb modischer Freizeitbekleidung
(511) 16 18 25 26

(111) 1078602
(151) 18.01.2011.
(540)

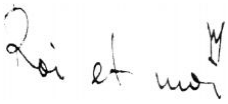

(732) OOO "Esper Group"
(511) 14 18 25 35

(111) 1078619
(151) 06.04.2011.
(540)

**MONTREUX**

(732) Hansgrohe AG
(511) 06 11 21

(111) 1078620
(151) 08.04.2011.
(540)

**ONETOUCH SELECTMINI**

(732) Janssen Pharmaceutica NV
(511) 05 10

(111) 1078646
(151) 30.03.2011.
(540)

*The Experience*

(732) GIOBATTA E PIERO GARBELLOTTO S.P.A.
(511) 06 19 20

(111) 1078647
(151) 12.04.2011.
(540)

MISTIGRIS

(732) MORANDO S.P.A.
(511) 31

(111) 1078676
(151) 26.04.2011.
(540)

MEVIUS

(732) JAPAN TOBACCO INC.
(511) 34

(111) 1078677
(151) 26.04.2011.
(540)

LEGATA

(732) JAPAN TOBACCO INC.
(511) 34

(111) 1078685
(151) 02.05.2011.
(540)

**Cammino D'Oro**

(732) GOLDSTEIG Käsereien Bayerwald GmbH
(511) 29 43

(111) 1078699
(151) 19.05.2011.
(540)

**NIVIQA**

(732) Janssen Pharmaceutica NV
(511) 05

(111) 1078700
(151) 11.05.2011.
(540)

(732) Distilleries Group Toorank B.V.
(511) 32 33

(111) 1078705
(151) 10.05.2011.
(540)

**SAFYRAL**

(732) Bayer Aktiengesellschaft
(511) 05

(111) 1078706
(151) 10.05.2011.
(540)

**BEYASMIN**

(732) Bayer Aktiengesellschaft
(511) 05

(111) 1078707
(151) 10.05.2011.
(540)

**BEYAZ**

(732) Bayer Aktiengesellschaft
(511) 05

(111) 1078708
(151) 10.05.2011.
(540)

**EVOINSERTER**

(732) Bayer Aktiengesellschaft
(511) 10

(111) 1078709
(151) 09.02.2011.
(540)

**ESWAB**

(732) COPAN ITALIA S.P.A.
(511) 09

(111) 1078719
(151) 13.04.2011.
(540)

**OMNITOUCH**

(732) ALCATEL LUCENT
(511) 09

(111) 1078720
(151) 14.04.2011.
(540)

**OMNIVISTA**

(732) ALCATEL LUCENT
(511) 09

(111) 1078724
(151) 21.04.2011.
(540)

(732) Obschestvo s ogranichennoi otvetstvennostiy "SPLAT-KOSMETIKA"
(511) 03

(111) 1078733
(151) 24.01.2011.
(540)

smart
PICTURA

(732) KHG GmbH & Co. KG
(511) 20

(111) 1078742
(151) 09.12.2010.
(540)

**NUPO**

(732) Flex Pack A/S
(511) 05 29

(111) 1078744
(151) 09.12.2010.
(540)

HotelsPro

(732) ÖZALTUN OTELCİLİK TURİZM VE TİCARET LİMİTED ŞİRKETİ
(511) 39 43

(111) 1078748
(151) 11.02.2011.
(540)

**eiCan**

(732) Würth Elektronik eiSos GmbH & Co. KG
(511) 09 35

(111) 1078757
(151) 25.02.2011.
(540)

paolo botti

(732) "DJORDANS" Ltd.
(511) 18 25 35

(111) 1078758
(151) 02.05.2011.
(540)

**COPPA COCKTAILS**

(732) Distilleries Group Toorank B.V.
(511) 32 33 35

(111) 1078778
(151) 14.02.2011.
(540)

HOGAN
REBEL

(732) TOD'S S.P.A.
(511) 09 18 25

(111) 1078783
(151) 10.05.2011.
(540)

**THEOREM CLINICAL RESEARCH**

(732) Omnicare Clinical Research, Inc.
(511) 42

(111) 1078792
(151) 31.03.2011.

(540)

(732) Pivovarna Laško, d.d.
(511) 32 33 35

(111) 1078794
(151) 18.04.2011.
(540)

**SIMPLY-T**

(732) Bayer Aktiengesellschaft
(511) 05 10

(111) 1078808
(151) 02.05.2011.
(540)

**FIDIZO**

(732) Helsinn Healthcare SA
(511) 05

(111) 1078809
(151) 02.05.2011.
(540)

**AKYNZEO**

(732) Helsinn Healthcare SA
(511) 05

(111) 1078810
(151) 02.05.2011.
(540)

**AROKARIS**

(732) Helsinn Healthcare SA
(511) 05

(111) 1078817
(151) 13.05.2011.
(540)

(732) MARTELL & Co
(511) 33

(111) 1078836
(151) 15.02.2011.
(540)

(732) Mitsubishi Tanabe Pharma Corporation
(511) 01 05

(111) 1078846
(151) 02.11.2010.
(540)

(732) GRUPA LOTOS SPÓŁKA AKCYJNA
(511) 04

(111) 1078847
(151) 02.11.2010.
(540)

(732) GRUPA LOTOS SPÓŁKA AKCYJNA
(511) 04

(111) 1078850
(151) 10.02.2011.
(540)

**SIZE?**

(732) JD Sports Fashion Plc
(511) 18 25 35

(111) 1078852
(151) 08.02.2011.

(540)

(732) Messe München GmbH
(511) 16 35 41

(111) 1078862
(151) 10.12.2010.
(540)

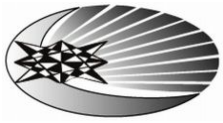

(732) AKTSIONERNO DROUJESTVO "OCTA LIGHT BULGARIA" AD
(511) 09 11 35 37 41 42

(111) 1078879
(151) 19.01.2011.
(540)

**ECO DRAW**

(732) FUCHS PETROLUB AG
(511) 01 02 04

(111) 1078890
(151) 16.03.2011.
(540)

**RAFIX-TAB**

(732) Häfele GmbH & Co KG
(511) 06 19 20

(111) 1078899
(151) 23.03.2011.
(540)

(732) MNC MOBILE NEWS CHANNEL SA
(511) 38

(111) 1078917
(151) 21.04.2011.
(540)

(732) Fabrique de montres Rotary S.A. (Rotary Watch Company Limited)
(511) 14

(111) 1078926
(151) 24.03.2011.
(540)

(732) SEBAT KİMYA SANAYİ İÇ VE DIŞ TİCARET A.Ş.
(511) 03

(111) 1078929
(151) 02.05.2011.
(540)

(732) TETRIBÉRICA - COMÉRCIO INTERNACIONAL, S.A.
(511) 18 25

(111) 1078933
(151) 13.04.2011.
(540)

(732) Japan Tobacco Inc.
(511) 41

(111) 1078935
(151) 26.04.2011.
(540)

(732) Barry Callebaut AG
(511) 29 30 41 42

(111) 1078957
(151) 12.05.2011.
(540)

(732) Marchon Eyewear, Inc.
(511) 09

(111) 1078965
(151) 19.05.2011.

(540)

**QUIVERA**

(732) Janssen Pharmaceutica NV
(511) 05

(111) 1078973
(151) 28.02.2011.
(540)

**CARPET GREEN LINE - Bringing the Tree into Your Living Room**

(732) PolymerLatex GmbH
(511) 01 17 27

(111) 1078974
(151) 24.01.2011.
(540)

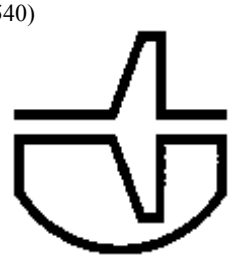

(732) Rízení letového provozu České republiky, státní podnik
(511) 09 16 35 36 37 39 40 41 42

(111) 1078975
(151) 07.04.2011.
(540)

**METO EAGLE**

(732) Checkpoint Systems International GmbH
(511) 16 24

(111) 1079004
(151) 24.03.2011.
(540)

**SCHUNK & ROSENFELD**

(732) Ewgenij Rosenfeld Olga Schunk
(511) 14 18 25

(111) 1079009
(151) 02.05.2011.
(540)

**KBA-NotaSys**

(732) KBA-NotaSys SA
(511) 07 09 37 41

(111) 1079041
(151) 29.04.2011.
(540)

(732) Merck KGaA
(511) 02 05

(111) 1079043
(151) 10.05.2011.
(540)

**REAURA**

(732) Koninklijke Philips Electronics N.V.
(511) 03 05 10 44

(111) 1079052
(151) 05.05.2011.
(540)

(732) BARILLA FRANCE S.A.S.
(511) 30

(111) 1079056
(151) 03.12.2010.
(540)

**SEEYA**

(732) OBSCHESTVO S OGRANICHENNOY OTVETSTVENNOSTYU "SPLAT-COSMETICA"
(511) 03

(111) 1079071
(151) 08.11.2010.
(540)

**avania**

(732) BayWa AG Muenchen
(511) 01 02 03 08 11 16 19 24 27 37

(111) 1079072
(151) 02.12.2010.

(540)

(732) Loading Systems International B.V.
(511) 06 07 19

(111) 1079076
(151) 20.12.2010.
(540)

(732) CRIS CONF. S.P.A.
(511) 09 18 25 35

(111) 1079081
(151) 21.12.2010.
(540)

(732) DPD Dynamic Parcel Distribution GmbH & Co. KG
(511) 35 38 39

(111) 1079083
(151) 18.02.2011.
(540)

**PAPERPOWER**

(732) GIFAS ELECTRIC GmbH
(511) 09 37 42

(111) 1079085
(151) 17.02.2011.
(540)

**perry**

(732) "Dukat" d.o.o. za trgovinu, Banja Luka
(511) 01 03 05

(111) 1079090
(151) 31.01.2011.

(540)

**XCEED**

(732) ERTE KOZMETİK SANAYİ VE TİCARET ANONİM ŞİRKETİ
(511) 03

(111) 1079104
(151) 02.05.2011.
(540)

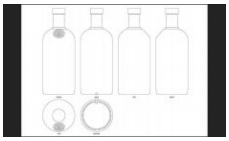

(732) V&S Vin & Sprit Aktiebolag
(511) 33

(111) 1079113
(151) 10.05.2011.
(540)

(732) FATO GROUP INTERNATIONAL LIMITED COMPANY
(511) 09

(111) 1079126
(151) 06.04.2011.
(540)

(732) NOMS DE CODE
(511) 03

(111) 1079137
(151) 07.03.2011.
(540)

**CATTIN FILTRATION**

(732) ASTEN
(511) 06 09 11 37 40 42

(111) 1079138
(151) 28.04.2011.
(540)

**1 : 1**

(732) LESAFFRE ET COMPAGNIE
(511) 01 30

(111) 1079159
(151) 17.05.2011.
(540)

**SARACEN**

(732) CHEMINOVA A/S
(511) 05

(111) 1079166
(151) 21.04.2011.
(540)

IRIDIUM

(732) Etos S.A.
(511) 09

(111) 1079190
(151) 05.05.2011.
(540)

ЛюмиДóр
LumiDór

(732) KSK-electro Limited
(511) 11

(111) 1079198
(151) 09.02.2011.
(540)

DIMOCO

(732) DIMOCO - Direct Mobile Communications GmbH
(511) 35 38 42

(111) 1079200
(151) 21.03.2011.
(540)

**MARESI**

(732) MARESI Trademark GmbH & Co KG
(511) 29 30

(111) 1079201
(151) 21.03.2011.
(540)

Vienna Ice Coffee

(732) MARESI Trademark GmbH & Co KG
(511) 30

(111) 1079204
(151) 11.08.2010.
(540)

baci LINGERIE

(732) André Geske
(511) 03 09 14 18 25 26 35 38

(111) 1079227
(151) 03.03.2011.
(540)

**CONTRASTVIEW**

(732) SAINT-GOBAIN GLASS SOLUTIONS FRANCE
(511) 19 21

(111) 1079230
(151) 04.03.2011.
(540)

**Lemon Love**

(732) dm-drogerie markt GmbH + Co. KG
(511) 03 08 21

(111) 1079234
(151) 13.04.2011.
(540)

WINONE

(732) Liang Yongbiao
(511) 07

(111) 1079236
(151) 06.04.2011.
(540)

(732) GEORGIA-PACIFIC S.A.R.L.
(511) 21

(111) 1079248
(151) 20.04.2011.
(540)

**PRIAXOR**

(732) BASF SE
(511) 01 05

(111) 1042602
(151) 14.05.2010.
(540)

CLASS

(732) Paglieri Sell System S.p.A.
(511) 03 04 07 21 26

(111) 1068098
(151) 26.11.2010.
(540)

**MOT**

(732) Kielikone Oy
(511) 09 42

(111) 1079271
(151) 26.04.2011.
(540)

**FREDDO**

(732) Ljubljanske mlekarne, d.d.
(511) 29 30 35

(111) 1079303
(151) 22.04.2011.
(540)

**CORDIVARI**

(732) CORDIVARI S.R.L.
(511) 06 11 37

(111) 1079307
(151) 10.02.2011.
(540)

**TRIPLE BLEND**

(732) Wella AG
(511) 01 03

(111) 1079319
(151) 24.11.2010.
(540)

MAVİ BEYAZ

(732) ÇİFTÇİLER BİRLİK KAĞITÇILIK HİJYENIK ÜRÜNLER VE YAĞ SANAYİ ANONİM ŞİRKETİ
(511) 05 16 21

(111) 1079324
(151) 14.01.2011.
(540)

**DUNATECH**

(732) ADARAD DÖKÜM ÜRÜNLERİ SANAYİ VE TİCARET ANONİM ŞİRKETİ
(511) 11

(111) 1079325
(151) 07.01.2011.
(540)

**REFAN**

(732) REFAN BULGARIA OOD
(511) 03 04 35

(111) 1079332
(151) 26.01.2011.
(540)

CHIP ONLINE de

(732) CHIP Xonio Online GmbH
(511) 09 16 35 38 41

(111) 1079344
(151) 24.03.2011.
(540)

**MONIN**

(732) GEORGES MONIN SAS
(511) 29 30 32

(111) 1079357
(151) 28.04.2011.
(540)

**METRODIN**

(732) Ares Trading S.A.
(511) 05

(111) 1079358
(151) 07.04.2011.
(540)

**TOVEL COMPACT**

(732) Checkpoint Systems International GmbH
(511) 16 24

(111) 1079360
(151) 26.04.2011.
(540)

FINA

(732) FRIESLAND Brands B.V.
(511) 29

(111) 1079366
(151) 12.04.2011.
(540)

(732) Pivovary Staropramen a.s.
(511) 32

(111) 1079380
(151) 03.05.2011.
(540)

(732) Lidl Stiftung & Co. KG
(511) 30

(111) 1079381
(151) 18.05.2011.
(540)

**SNAPQUIK**

(732) Colder Products Company
(511) 17

(111) 1079390
(151) 01.04.2011.
(540)

(732) ITM ENTREPRISES Société par actions simplifiée
(511) 03 05 08 10 16 21

(111) 1079401
(151) 01.04.2011.
(540)

(732) ITM ENTREPRISES Société par actions simplifiée
(511) 03 05 16 21

(111) 1079410
(151) 01.04.2011.
(540)

(732) ITM ENTREPRISES Société par actions simplifiée
(511) 03 05 08 10 16 21 26

(111) 1079411
(151) 01.04.2011.
(540)

(732) ITM ENTREPRISES Société par actions simplifiée
(511) 03 05 16

(111) 1079438
(151) 20.05.2011.
(540)

**FIRENZA**

(732) Janssen Pharmaceutica NV
(511) 05

(111) 1079439
(151) 20.05.2011.
(540)

**GLESSATA**

(732) Janssen Pharmaceutica NV
(511) 05

(111) 1079440
(151) 20.05.2011.
(540)

**NISTRA**

(732) Janssen Pharmaceutica NV
(511) 05

(111) 1079441
(151) 23.05.2011.
(540)

**DERMABOND**

(732) Janssen Pharmaceutica NV
(511) 10

(111) 1079443
(151) 22.02.2011.
(540)

**BTIBONE**

(732) BIOTECHNOLOGY INSTITUTE, S.L.
(511) 05

(111) 1079445
(151) 31.05.2011.
(540)

**TORIUS**

(732) Janssen Pharmaceutica NV
(511) 05

(111) 1079447
(151) 31.05.2011.
(540)

**DIRENZA**

(732) Janssen Pharmaceutica NV
(511) 05

(111) 1079448
(151) 31.05.2011.
(540)

**CIESSA**

(732) Janssen Pharmaceutica NV
(511) 05

(111) 1079449
(151) 31.05.2011.
(540)

**CLORIZA**

(732) Janssen Pharmaceutica NV
(511) 05

(111) 1079450
(151) 31.05.2011.
(540)

**SOTEZA**

(732) Janssen Pharmaceutica NV
(511) 05

(111) 1079452
(151) 26.02.2011.
(540)

(732) KASON GmbH & Co. KG
(511) 18 20 24

(111) 1079467
(151) 28.04.2011.
(540)

**REHAB THE BEAST!**

(732) Hansen Beverage Company
(511) 05 30 32

(111) 1079477
(151) 06.04.2011.
(540)

(732) GEORGIA-PACIFIC S.A.R.L.
(511) 21

(111) 1079485
(151) 04.05.2011.
(540)

(732) Philip Morris Products S.A.
(511) 34

(111) 1079512
(151) 12.05.2011.
(540)

**CIAO BELLO**

(732) BORGO SCOPETO E CAPARZO S.r.l. Società Agricola
(511) 33

(111) 1079523
(151) 17.05.2011.
(540)

**ABRACEDE**

(732) Merck Sharp & Dohme Corp., New Jersey Corporation
(511) 05

(111) 1079564
(151) 25.03.2011.
(540)

**PREFECT**

(732) TURCAN Oleg
(511) 34

(111) 1079571
(151) 02.05.2011.
(540)

**cameo color**

(732) Top Hair GmbH
(511) 03

(111) 1079577
(151) 03.05.2011.
(540)

(732) Ostik Imports Limited
(511) 31

(111) 1079579
(151) 10.05.2011.
(540)

**DEGSON**

(732) DEGSON ELECTRONICS CO., LTD.
(511) 09

(111) 1079580
(151) 21.04.2011.
(540)

(732) Schwarze-Robitec GmbH
(511) 06 07 40

(111) 1079595
(151) 17.05.2011.
(540)

(732) CHINA CERTIFICATION & INSPECTION (GROUP) CO., LTD.
(511) 36 42

(111) 1079602
(151) 23.05.2011.
(540)

(732) BBB Umwelttechnik GmbH
(511) 09 41 42

(111) 1079610
(151) 09.05.2011.
(540)

**Wörwag Pharma**

(732) WÖRWAG PHARMA GmbH & Co. KG
(511) 03 05 29 30 35

(111) 1079624
(151) 02.08.2010.
(540)

(732) CHAFFRINGEON Bernard
(511) 03 05 10

(111) 1079639
(151) 25.03.2011.
(540)

(732) LANTERNA ALIMENTARI GENOVA S.P.A.
(511) 30

(111) 1079645
(151) 09.05.2011.
(540)

**CLEANCURVE**

(732) Janssen Pharmaceutica NV
(511) 03 05 10

(111) 1079646
(151) 16.05.2011.
(540)

**SUNFLEX**

(732) Sunflex Aluminiumsysteme GmbH
(511) 06 19

(111) 1079650
(151) 08.04.2011.
(540)

(732) Janssen Pharmaceutica NV
(511) 03 05 16 21

(111) 1079656
(151) 10.05.2011.
(540)

(732) JINAN MEIDE MALLEABLE IRON CORPORATION LIMITED
(511) 06 11

(111) 1079662
(151) 24.01.2011.
(540)

(732) ÖMÜRPEN PVC METAL SANAYİ VE TİCARET LİMİTED ŞİRKETİ
(511) 06 17 19

(111) 1079680
(151) 11.05.2011.
(540)

(732) NOVARTIS AG
(511) 05

(111) 1079707
(151) 28.01.2011.
(540)

KIRCHNER

(732) KIRCHNER ITALIA S.P.A.
(511) 11 42

(111) 1079713
(151) 07.04.2011.
(540)

**MARBLE TULIP**

(732) Colotis Pty. Ltd
(511) 02

(111) 1079760
(151) 25.01.2011.
(540)

**LOHR**

(732) LOHR IMMOBILIER
(511) 06 07 09 12 16 35 36 37 38 39 41 42 45

(111) 1079776
(151) 18.05.2011.
(540)

**AQUATOUCH**

(732) Koninklijke Philips Electronics N.V.
(511) 08

(111) 1079779
(151) 05.05.2011.
(540)

(732) Red Bull GmbH
(511) 32

(111) 1079796
(151) 19.05.2011.
(540)

(732) Henkel AG & Co. KGaA
(511) 03 35 41

(111) 1079811
(151) 19.04.2011.
(540)

(732) Intersnack Group GmbH & Co. KG
(511) 29 30 31

(111) 1079813
(151) 03.05.2011.
(540)

**Occasions**

(732) Intersnack Group GmbH & Co. KG
(511) 29 30 31

(111) 1079814
(151) 05.05.2011.
(540)

**POWERTOUCH**

(732) Koninklijke Philips Electronics N.V.
(511) 08

(111) 1079824
(151) 11.02.2011.
(540)

**eiSos**

(732) Würth Elektronik eiSos GmbH & Co. KG
(511) 09 11 16 35 41

(111) 1079827
(151) 10.05.2011.
(540)

**M3D**

(732) Marchon Eyewear, Inc.
(511) 09

(111) 1079834
(151) 03.05.2011.
(540)

(732) Cav. Pasquale Vena & Figli - Amaro Lucano S.p.A.
(511) 33

(111) 1079840
(151) 17.01.2011.

(540)

(732) Union des Associations Européennes de Football (UEFA)
(511) 01 03 04 05 06 07 08 09 10 11 12 14 15 16 18 20 21 24 25 26 27 28 29 30 31 32 33 35 36 37 38 39 40 41 42 43 44 45

(111) 1079856
(151) 10.01.2011.
(540)

**ПРИРОДНА КОЛЕКЦІЯ**

(732) Tovarystvo z obmezhenoiu vidpovidalnistiu "Krymska vodochna companiia"
(511) 33

(111) 1079862
(151) 12.01.2011.
(540)

(732) New Look Limited
(511) 16 25 35

(111) 1079865
(151) 13.01.2011.
(540)

(732) DPD Dynamic Parcel Distribution GmbH & Co. KG
(511) 39

(111) 1079867
(151) 28.01.2011.

(540)

(732) AFOI TSATSOULI ABEE
(511) 29

(111) 1079868
(151) 14.01.2011.
(540)

(732) C.C.V. BEAUMANOIR
(511) 03 05 09 12 14 16 18 24 25 26 28 30 31 32 35 39 41 43 44 45

(111) 1079871
(151) 21.12.2010.
(540)

(732) DPD Dynamic Parcel Distribution GmbH & Co. KG
(511) 35 38 39

(111) 1079879
(151) 28.03.2011.
(540)

(732) Yiwu Meishi Cosmetic Co., Ltd.
(511) 03

(111) 1079892
(151) 06.04.2011.
(540)

**MaxiComfort**

(732) Protektorwerk Florenz Maisch GmbH & Co. KG
(511) 06 07 19

(111) 1079915
(151) 06.05.2011.

(540)

(732) Apple Inc.
(511) 09

(111) 1079923
(151) 12.05.2011.
(540)

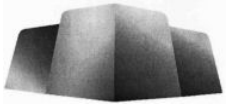

(732) Great Wall Motor Company Limited
(511) 12 37

(111) 1079924
(151) 12.05.2011.
(540)

(732) Great Wall Motor Company Limited
(511) 12 37

(111) 1079951
(151) 26.05.2011.
(540)

**VIRALSAN**

(732) Merck KGaA
(511) 05

(111) 1079959
(151) 27.05.2011.
(540)

**DeLock**

(732) Tragant Handels- und Beteiligungs GmbH
(511) 09 16 35

(111) 1079963
(151) 21.01.2011.
(540)

(732) LEADER S.P.A.
(511) 09 28 38 42

(111) 1079969
(151) 08.04.2011.
(540)

Život ispunjen opuštajućom klimom

(732) DELTRON d.o.o.
(511) 07 08 09 10 11 12 35 36 37 38 39 40 41 42

(111) 1079984
(151) 16.12.2010.
(540)

DRAŽICE

(732) DRUŽSTEVNÍ ZÁVODY DRAŽICE - STROJÍRNA s.r.o.
(511) 11

(111) 1080024
(151) 27.01.2011.
(540)

**Pi**

(732) Lodestar Anstalt (a Liechtenstein company)
(511) 33

(111) 1080025
(151) 27.01.2011.
(540)

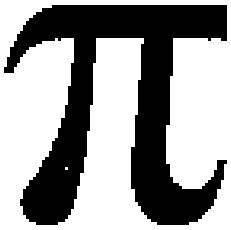

(732) Lodestar Anstalt (a Liechtenstein company)
(511) 33

(111) 1080026
(151) 27.01.2011.
(540)

**22 over 7**

(732) Lodestar Anstalt (a Liechtenstein company)
(511) 33

(111) 1080032
(151) 16.05.2011.
(540)

**IFIRMACOMBI**

(732) KRKA, tovarna zdravil, d.d., Novo mesto
(511) 05

(111) 1080033
(151) 16.05.2011.
(540)

**CO-OLIMESTRA**

(732) KRKA, tovarna zdravil, d.d., Novo mesto
(511) 05

(111) 1080036
(151) 16.05.2011.
(540)

**DASSELTA**

(732) KRKA, tovarna zdravil, d.d., Novo mesto
(511) 05

(111) 1080037
(151) 16.05.2011.
(540)

**ATORDIPINE**

(732) KRKA, tovarna zdravil, d.d., Novo mesto
(511) 05

(111) 1080038
(151) 07.04.2011.
(540)

**GEORGINI**

(732) Georgini Holdings Pty Ltd
(511) 09 14 18

(111) 1080042
(151) 22.12.2009
(540)

458 ITALIA

(732) FERRARI S.P.A.
(511) 09 12 16 18 25 28 35

(111) 1080060
(151) 16.05.2011.
(540)

ТОЛТАРОКС

(732) KRKA, tovarna zdravil, d.d., Novo mesto
(511) 05

(111) 1080080
(151) 05.11.2010.
(540)

**ADVISE**

(732) Harburg-Freudenberger Maschinenbau GmbH
(511) 06 07 09 11 19 42

(111) 1080090
(151) 24.01.2011.
(540)

**GARDENA**

(732) A. LOACKER S.p.A. - AG
(511) 30

(111) 1080091
(151) 01.02.2011.
(540)

DORCEL

(732) MARC DORCEL
(511) 09 10 16 38 41

(111) 1080094
(151) 31.12.2010.
(540)

ece

(732) HÜNKAR ECZA VE ITRIYAT SANAYI VE TICARET LIMITED SIRKETI
(511) 03 05

(111) 1080099
(151) 24.02.2011.
(540)

(732) COVIM S.P.A.
(511) 09 30 35

(111) 1080121
(151) 29.04.2011.
(540)

VINCE CAMUTO

(732) Camuto Consulting, Inc.
(511) 03

(111) 1080126
(151) 20.04.2011.
(540)

**EVIPLERA**

(732) GILEAD SCIENCES LIMITED
(511) 05

(111) 1080134
(151) 20.04.2011.
(540)

Maltesers

(732) Mars Chocolate UK Limited
(511) 29 30

(111) 1080135
(151) 15.03.2011.
(540)

KRİSTAL

(732) ZORLU TEKSTİL ÜRÜNLERİ PAZARLAMA ANONİM ŞİRKETİ
(511) 24

(111) 1080136
(151) 15.04.2011.
(540)

**BERENDSEN**

(732) SOPHUS BERENDSEN A/S
(511) 35

(111) 1080142
(151) 03.05.2011.
(540)

**NEOMAG**

(732) SICPA HOLDING SA
(511) 02 16 40 45

(111) 1080156
(151) 18.04.2011.
(540)

NERI

(732) NERI ADEMARO & C. S.n.c.
(511) 29

(111) 1014984
(151) 03.06.2009.
(540)

**O'NEILL**

(732) Sisco Textiles N.V.
(511) 03 09 14 16 18 22 25 28 35

(111) 1039841
(151) 28.12.2009.
(540)

**HCoute**

(732) Newpark Projects GmbH
(511) 34

(111) 1054565
(151) 20.04.2010.
(540)

**FRANCESCO MOLON**

(732) GIEMME STILE SPA
(511) 20 35 42

(111) 1055446
(151) 03.09.2010.
(540)

OSIM

(732) OSIM INTERNATIONAL LTD
(511) 10 20 35

(111) 1056619
(151) 05.08.2010.
(540)

FROM SUSTAINABLE FISHING

(732) Hipp & Co
(511) 05 29 30

(111) 1058117
(151) 26.08.2010.
(540)

**MEDWORKS**

(732) GlobeNet Számítástechnikai, Fejlesztő és Kereskedelmi Zrt.
(511) 35 41 42

(111) 1068233
(151) 10.05.2010.
(540)

enviva

(732) enviva GmbH
(511) 07 11 21 37

(111) 1080223
(151) 29.01.2011.
(540)

**obi**

(732) OBI GmbH & Co. Deutschland KG
(511) 35 38 42 45

(111) 1080236
(151) 11.04.2011.
(540)

**BE ICONIC**

(732) PARFUMS CHRISTIAN DIOR
(511) 03

(111) 1080251
(151) 18.02.2011.
(540)

**SIMABTRA**

(732) CELLTRION, INC.
(511) 05

(111) 1080270
(151) 29.04.2011.
(540)

HYPNOSE
DOLL EYES

(732) LANCOME PARFUMS ET BEAUTE & CIE
(511) 03

(111) 1080292
(151) 16.05.2011.
(540)

CleanEffect

(732) STUDIO MODERNA SA
(511) 01

(111) 1080295
(151) 28.03.2011.
(540)

Kingever

(732) Yiwu Jinjiu Battery Co., Ltd.
(511) 09

(111) 1080296
(151) 18.04.2011.
(540)

DR.PASHA

(732) SBA Communications d.o.o.
(511) 03 05 30

(111) 1080297
(151) 04.05.2011.
(540)

HIBIS

(732) Han Tide Biomedical Corp.
(511) 03 05 35

(111) 1080302
(151) 28.04.2011.
(540)

**EGITIM**

(732) EGIS GYÓGYSZERGYÁR Nyilvánosan Működő Részvénytársaság
(511) 05

(111) 1080311
(151) 22.02.2011.
(540)

CHATEAV
SMITH HAVT LAFITTE
GRAND CRU CLASSÉ DE GRAVES
2008
PESSAC LEOGNAN
DANIEL ET FLORENCE CATHIARD

(732) SAS D. CATHIARD
(511) 33

(111) 1080312
(151) 18.02.2011.
(540)

**HERTUZU**

(732) CELLTRION, INC.
(511) 05

(111) 1080313
(151) 18.02.2011.
(540)

**HERZUMA**

(732) CELLTRION, INC.
(511) 05

(111) 1080314
(151) 17.02.2011.
(540)

**SECOP**

(732) Secop GmbH
(511) 07 09

(111) 1080321
(151) 29.04.2011.
(540)

WGON

(732) MC MC TEKSTIL TURIZM INSAAT SANAYI VE TICARET LIMITED SIRKETI
(511) 43

(111) 1080323
(151) 17.05.2011.
(540)

**DIVA**

(732) EDNOLITCHNO DRUJESTVO S OGRANITCHENA OTGOVORNOST "FINANSKONSULT"
(511) 34

(111) 1080324
(151) 17.05.2011.
(540)

**GRACIA**

(732) EDNOLITCHNO DRUJESTVO S OGRANITCHENA OTGOVORNOST "FINANSKONSULT"
(511) 34

(111) 1080328
(151) 28.04.2011.
(540)

**TROMBATIL**

(732) EGIS GYÓGYSZERGYÁR Nyilvánosan Működő Részvénytársaság
(511) 05

(111) 1080329
(151) 28.04.2011.
(540)

**PIRIPILL**

(732) EGIS GYÓGYSZERGYÁR Nyilvánosan Működő Részvénytársaság
(511) 05

(111) 1080334
(151) 11.04.2011.
(540)

**SPIDER KING**

(732) SPIDER KING GROUP CO., LTD.
(511) 18

(111) 1080335
(151) 29.04.2011.
(540)

(732) Xiamen Five Continents Int'l Trading Co., Ltd.
(511) 21

(111) 1080340
(151) 27.04.2011.
(540)

**TRUFARELA**

(732) Dotchirne pidpriemstvo "Konditerska korporatzia "Roshen"
(511) 30

(111) 1080345
(151) 15.11.2010.
(540)

(732) MKM Marketing Institute GmbH
(511) 03 05 09 16 35 41 42

(111) 1080366
(151) 29.12.2010.
(540)

**CREDITO LOMBARDO-VENETO**

(732) BRIXIA MAXIME S.r.l.
(511) 09 16 35 36 38

(111) 1080391
(151) 08.04.2011.
(540)

(732) DELTRON d.o.o.
(511) 07 08 09 10 11 12 35 36 37 38 39 40 41 42

(111) 1080415
(151) 26.04.2011.
(540)

(732) BSH Bosch und Siemens Hausgeräte GmbH
(511) 07 09 11

(111) 1080428
(151) 05.05.2011.
(540)

(732) PHILIP WATCH S.p.A.
(511) 14

(111) 1080433
(151) 06.05.2011.
(540)

**Der Scharfe Maxx**

(732) Studer Käsemarketing AG
(511) 29

(111) 1080450
(151) 10.05.2011.
(540)

**Digitram**

(732) SIEMENS SAS Division Mobility
(511) 09 37 42

(111) 1080459
(151) 17.05.2011.
(540)

(732) Philip Morris Brands Sàrl
(511) 34

(111) 1080460
(151) 17.05.2011.
(540)

**MURATTI COBALTO**

(732) Philip Morris Products S.A.
(511) 34

(111) 1080461
(151) 19.05.2011.
(540)

**MURATTI ORO**

(732) Philip Morris Products S.A.
(511) 34

(111) 1080462
(151) 18.05.2011.
(540)

**MURATTI MARMO**

(732) Philip Morris Products S.A.
(511) 34

(111) 1080463
(151) 19.05.2011.
(540)

**MURATTI SCARLATTO**

(732) Philip Morris Products S.A.
(511) 34

(111) 1080464
(151) 18.05.2011.
(540)

**MURATTI CORALLO**

(732) Philip Morris Products S.A.
(511) 34

(111) 1080465
(151) 19.05.2011.
(540)

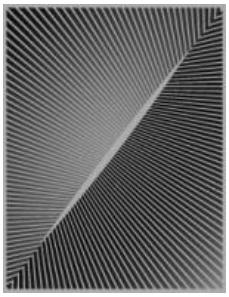

(732) Philip Morris Brands Sàrl
(511) 34

(111) 1080466
(151) 19.05.2011.
(540)

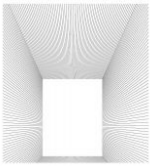

(732) Philip Morris Brands Sàrl
(511) 34

(111) 1080467
(151) 23.05.2011.
(540)

**BEYOND**

(732) Philip Morris Products S.A.
(511) 34

(111) 1080471
(151) 28.04.2011.
(540)

(732) OUTOX International, société anonyme
(511) 25 30 32

(111) 1080489
(151) 31.05.2011.
(540)

**GOLD ACCENT**

(732) Philip Morris Brands Sàrl
(511) 34

(111) 1080530
(151) 25.03.2010.

(540)

PÖPPELMANN

(732) Pöppelmann Holding GmbH & Co. KG
(511) 07 09 10 11 12 16 17 20 21 40 42

(111) 1080532
(151) 04.05.2011.
(540)

**VDX**

(732) BIOFARMA
(511) 05

(111) 1080536
(151) 24.03.2011.
(540)

(732) Great Wall Motor Company Limited
(511) 12 37

(111) 1080560
(151) 14.03.2011.
(540)

GIMDOG

(732) H. von Gimborn GmbH
(511) 03 05 16 18 22 28 31

(111) 1080583
(151) 13.05.2011.
(540)

**CARRIERDEV**

(732) ALCATEL LUCENT
(511) 09 42

(111) 1080586
(151) 01.04.2011.
(540)

ВОЛШЕБНЫЙ КРАЙ

(732) Otkrytoe aktsionernoe obshchestvo "Aston Produkty Pitania i Pishchevye Ingredienty"
(511) 35

(111) 1080590
(151) 21.02.2011.

(540)

(732) TOMIL s.r.o.
(511) 03 05

(111) 1080619
(151) 18.04.2011.
(540)

(732) Chocoladefabriken Lindt & Sprüngli AG
(511) 30

(111) 1080626
(151) 26.04.2011.
(540)

MANA

(732) METRO trgovska druzba d.d.
(511) 18 24 25 28

(111) 1080630
(151) 28.04.2011.
(540)

**TONDACH**

(732) TONDACH GLEINSTÄTTEN AG
(511) 02 06 19

(111) 1080636
(151) 26.05.2010.
(540)

**KAUFLAND**

(732) Kaufland Warenhandel GmbH & Co. KG
(511) 35 36 37 38 39 40 41 42 43 44

(111) 1080642
(151) 24.11.2010.

(540)

PavMax

(732) AP INVEST AD
(511) 01 19 37

(111) 1080650
(151) 05.05.2011.
(540)

**MAYFIELD**

(732) Nikolay Kolev
(511) 34

(111) 1080651
(151) 04.05.2011.
(540)

**MinuLakt**

(732) Omira Oberland-Milchverwertung Gesellschaft mit beschränkter Haftung
(511) 29 30 32

(111) 1080654
(151) 06.10.2010.
(540)

Servisair

(732) Servisair UK Limited
(511) 37 39 43

(111) 1080672
(151) 01.03.2011.
(540)

PARADISO

(732) RAGUSA d.o.o.
(511) 30 35 39

(111) 1080676
(151) 03.02.2011.
(540)

KOTÁNYI 1881

(732) Kotányi GmbH
(511) 29 30 35

(111) 1080692
(151) 31.03.2011.
(540)

**tecnolight**

(732) tecnolight Leuchten GmbH
(511) 11

(111) 1080695
(151) 15.04.2011.
(540)

BERENDSEN

(732) SOPHUS BERENDSEN A/S
(511) 35

(111) 1080697
(151) 15.04.2011.
(540)

**Call My Name**

(732) Spiral Solutions EOOD
(511) 35 38

(111) 1080770
(151) 13.05.2011.
(540)

**DIVA**

(732) FABRIKA DUHANA SARAJEVO DIONIČKO DRUŠTVO SARAJEVO
(511) 34

(111) 1080771
(151) 13.05.2011.
(540)

**GISELLE**

(732) FABRIKA DUHANA SARAJEVO DIONIČKO DRUŠTVO SARAJEVO
(511) 34

(111) 1080773
(151) 03.06.2011.
(540)

il Maestro

(732) Strauss Coffee B.V.
(511) 11 30 43

(111) 1080782
(151) 31.05.2011.
(540)

**SECURIEYE**

(732) Securiton AG
(511) 09 42

(111) 1080783
(151) 15.12.2009.

(540)

**CELESIO**

(732) Celesio AG
(511) 03 05 10 35 36 39 42 44

(111) 1080786
(151) 05.04.2011.
(540)

**Dominari**

(732) Dominari Holding SA
(511) 20 22 24 35 39

(111) 1080793
(151) 28.03.2011.
(540)

(732) OPEN BROADCAST NETWORK Dionicarsko drustvo Sarajevo
(511) 38 41

(111) 1080795
(151) 10.12.2010.
(540)

(732) ARISTO TRADING LIMITED
(511) 06

(111) 1080810
(151) 23.02.2011.
(540)

(732) OBI GmbH & Co. Deutschland KG
(511) 01 02 03 04 05 06 07 08 09 11 12 13 14 16 17 18 19 20 21 22 23 24 25 26 27 28 31 35 37 39 40 42 44 45

(111) 1080818
(151) 22.04.2011.
(540)

(732) Obschestvo s ogranichennoy otvetstvennostyu "STROIGAZMONTAZH"
(511) 06 07 08 09 12 14 16 18 25 28 35 37

(111) 1080854
(151) 08.06.2011.
(540)

**PERSONA**

(732) Tovarischestvo s ogranitchennoy otvetstvennostyu "ArLine"
(511) 34

(111) 1080863
(151) 24.03.2011.
(540)

**LEGATE**

(732) OPENMARK Ltd.
(511) 34 35

(111) 1080895
(151) 11.03.2011.
(540)

(732) PRYSMIAN CAVI E SISTEMI ENERGIA S.R.L.
(511) 09

(111) 1080909
(151) 23.04.2011.
(540)

(732) Internationale Möbelselektion IMS AG
(511) 18 20 24

(111) 1080926
(151) 21.04.2011.
(540)

**Schwarze-Robitec**

(732) Schwarze-Robitec GmbH
(511) 06 07 40

(111) 1080932
(151) 21.04.2011.
(540)

(732) S.C. CAROLI BRANDS S.R.L.
(511) 29 35

(111) 1080933
(151) 13.05.2011.
(540)

(732) SINOCHEM CORPORATION
(511) 02

(111) 1080935
(151) 05.05.2011.
(540)

(732) VALENTINO S.P.A.
(511) 03

(111) 1080953
(151) 19.05.2011.
(540)

**SUPER MILLION HAIR**

(732) RUAN CO., LTD
(511) 26

(111) 1080955
(151) 28.04.2011.
(540)

**ГАЙНОМАКС**

(732) EMBİL İLAÇ SANAYİ LİMİTED ŞİRKETİ
(511) 05

(111) 1080964
(151) 05.05.2011.
(540)

**ELASTOSPRAY**

(732) BASF Polyurethanes GmbH
(511) 01 17 19

(111) 1080967
(151) 16.05.2011.
(540)

**COAMVASTA**

(732) KRKA, tovarna zdravil, d.d., Novo mesto
(511) 05

(111) 1080980
(151) 04.04.2011.
(540)

**GUIDO A. ZÄCH**

(732) Consultenax AG
(511) 36 41 44

(111) 1080981
(151) 15.03.2011.
(540)

(732) "ITAL FOOD INDUSTRY" AD
(511) 30

(111) 1080984
(151) 05.05.2011.
(540)

**TEBODONT**

(732) Dr. Wild & Co. AG
(511) 03 05

(111) 1080986
(151) 12.04.2011.
(540)

**KÖNIGSOLAR**

(732) ALU KÖNIG STAHL GmbH
(511) 09 11 19

(111) 1081015
(151) 27.05.2011.
(540)

(732) Novartis AG
(511) 10

(111) 1081029
(151) 12.05.2011.
(540)

**MS MODE**

(732) MS Mode Holding B.V.
(511) 14 18 25 35

(111) 1081030
(151) 12.05.2011.

(540)

(732) MS Mode Holding B.V.
(511) 14 18 25 35

(111) 1081033
(151) 19.04.2011.
(540)

**BREWERS COMPASS**

(732) DSM IP Assets B.V.
(511) 01

(111) 1081036
(151) 13.06.2011.
(540)

**STEEL PRO**

(732) BESTWAY INFLATABLES & MATERIAL CORP.
(511) 06

(111) 1081045
(151) 10.11.2010.
(540)

ACRIFLEX

(732) DIASEN S.R.L.
(511) 01 02

(111) 1081046
(151) 16.12.2010.
(540)

**WIESEL**

(732) Fruit Security GmbH
(511) 06 19 37

(111) 1081055
(151) 25.05.2011.
(540)

**DORMEO**

(732) STUDIO MODERNA SA
(511) 35

(111) 1081066
(151) 19.04.2011.
(540)

**ZLATO ZA EVRE**

(732) LAURENZA NICOLA
(511) 14 35 36

(111) 1081074
(151) 22.03.2011.
(540)

(732) SC ORKLA FOODS ROMANIA SA
(511) 29

(111) 1081075
(151) 22.03.2011.
(540)

(732) SC ORKLA FOODS ROMANIA SA
(511) 29 30 35 39

(111) 1081088
(151) 06.01.2011.
(540)

(732) Bell Flavors & Fragrances Duft und Aroma GmbH
(511) 01 03 05 30 32 33

(111) 1081092
(151) 26.01.2011.
(540)

(732) ASFINAG Maut Service GmbH
(511) 36

(111) 1081095
(151) 01.02.2011.
(540)

(732) Beaussant, Philippe
(511) 41

(111) 1081096
(151) 02.02.2011.
(540)

**HAPPY START BY NUTELLA**

(732) FERRERO S.P.A.
(511) 30 35 41

(111) 1081102
(151) 04.02.2011.
(540)

**PICOTAO**

(732) PIC-CO AD
(511) 16 29 30

(111) 1081108
(151) 31.01.2011.
(540)

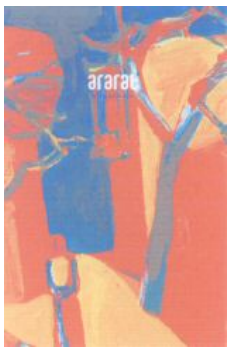


(732) "Ararat" Food Factory LLC
(511) 32

(111) 1081113
(151) 22.03.2011.
(540)

(732) SC Orkla Foods Romania SA
(511) 29 35 39

(111) 1081114
(151) 22.03.2011.
(540)

(732) SC Orkla Foods Romania SA
(511) 30 35

(111) 1081123
(151) 07.04.2011.
(540)

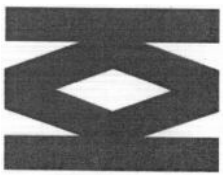

(732) MAHLE International GmbH
(511) 07 11 16 17

(111) 1081124
(151) 13.04.2011.
(540)

**Stickletti**

(732) Intersnack Group GmbH & Co. KG
(511) 29 30 31

(111) 1081125
(151) 13.04.2011.
(540)

**Stixi**

(732) Intersnack Group GmbH & Co. KG
(511) 29 30 31

(111) 1081129
(151) 22.03.2011.
(540)

DACHA

(732) Cannon Investments Limited
(511) 33

(111) 1081144
(151) 19.04.2011.
(540)

**WA**

(732) HLT Domestic IP LLC
(511) 43

(111) 1081146
(151) 22.04.2011.
(540)

ESOMEZOL

(732) Hanmi Holdings Co., Ltd.
(511) 05

(111) 1081149
(151) 03.05.2011.
(540)

**Redskin**

(732) Intersnack Group GmbH & Co. KG
(511) 29 30 31

(111) 1081166
(151) 27.05.2011.
(540)

**P90X2**

(732) Beachbody, LLC
(511) 09

(111) 1081185
(151) 17.05.2011.
(540)

(732) fashiontv.com GmbH
(511) 32 33

(111) 1081197
(151) 09.06.2011.
(540)

**VITAMIN SHAKE**

(732) Beiersdorf AG
(511) 03

(111) 1081206
(151) 05.05.2011.
(540)

**GRECO JLT**

(732) Greco International Holding AG
(511) 35 36 45

(111) 1081239
(151) 16.06.2011.
(540)

**V12**

(732) Henkel AG & Co. KGaA
(511) 03

(111) 1081254
(151) 24.05.2011.
(540)

(732) NOVARTIS AG
(511) 41 44

(111) 1081264
(151) 02.08.2010.
(540)

**BE EASY**

(732) CHAFFRINGEON Bernard
(511) 03 05 10

(111) 1081269
(151) 19.05.2011.
(540)

**COMFLOOR**

(732) Airex AG
(511) 11

(111) 1081281
(151) 10.06.2011.
(540)

(732) BSG AUTO GLASS CO., LTD
(511) 12 37

(111) 1081289
(151) 17.02.2011.
(540)

(732) AlzChem Trostberg GmbH
(511) 01 05 06 40

(111) 1081298
(151) 24.05.2011.
(540)

**& GO**

(732) NOVARTIS AG
(511) 41 44

(111) 1081299
(151) 24.05.2011.
(540)

**AND GO**

(732) NOVARTIS AG
(511) 41 44

(111) 1081317
(151) 21.04.2011.
(540)

**BLOX4**

(732) Bioglan AB
(511) 05

(111) 1081324
(151) 06.06.2011.
(540)

**ICLOUD**

(732) Apple Inc.
(511) 16 28

(111) 1081329
(151) 04.03.2009.
(540)

**Formatic**

(732) Kässbohrer Geländefahrzeug AG
(511) 07 12

(111) 1081331
(151) 14.12.2010.
(540)

**ROSTSELMASH**

(732) Obshchestvo s ogranichennoy otvetstvennost'yu "Kombajnovyj zavod "Rostselmash"
(511) 07 12 37

(111) 1081332
(151) 11.01.2011.
(540)

**BARÇA**

(732) FUTBOL CLUB BARCELONA
(511) 09 16 25 28 38 41

(111) 1081335
(151) 18.01.2011.
(540)

**HERMI**

(732) HERMI d.o.o.
(511) 06 09 35 37 42

(111) 1081347
(151) 09.02.2011.
(540)

(732) Lyoness Austria GmbH
(511) 09 35 36 38 41

(111) 1081349
(151) 25.02.2011.
(540)

(732) "DJORDANS" Ltd.
(511) 18 25 35

(111) 1081350
(151) 25.02.2011.
(540)

(732) "DJORDANS" Ltd.
(511) 18 25 35

(111) 1081351
(151) 25.02.2011.
(540)

(732) "DJORDANS" Ltd.
(511) 18 25 35

(111) 1081367
(151) 05.05.2011.
(540)

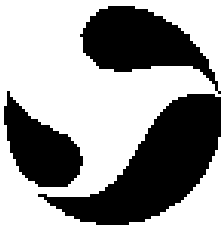

(732) SANOFI-AVENTIS
(511) 01 03 05 09 10 16 35 38 40 41 42 44

(111) 1081394
(151) 04.05.2011.
(540)

(732) FICOSOTA SYNTEZ OOD
(511) 03 05

(111) 1081399
(151) 19.04.2011.
(540)

(732) EMCO MAIER GESELLSCHAFT M.B.H.
(511) 07 08 09 10 35 41 42

(111) 1081403
(151) 19.05.2011.
(540)

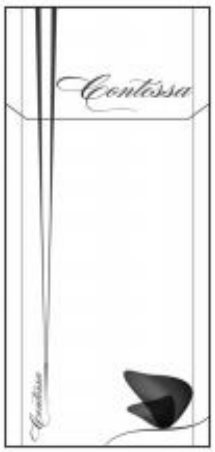


(732) FABRIKA DUHANA SARAJEVO DIONIČKO DRUŠTVO SARAJEVO
(511) 34

(111) 1081404
(151) 13.05.2011.
(540)

(732) FABRIKA DUHANA SARAJEVO DIONIČKO DRUŠTVO SARAJEVO
(511) 34

(111) 1081405
(151) 13.05.2011.
(540)

(732) FABRIKA DUHANA SARAJEVO DIONIČKO DRUŠTVO SARAJEVO
(511) 34

(111) 1081433
(151) 14.06.2011.
(540)

**Володя и медведи**

(732) LUKAS TRADING CORP.
(511) 33

(111) 1057673
(151) 02.06.2009.
(540)

**C. KREUL**

(732) C. Kreul GmbH & Co. KG
(511) 01 02 03 08 09 14 16 20

(111) 1060487
(151) 17.11.2010.
(540)

**NoCry**

(732) A. MENARINI INDUSTRIE FARMACEUTICHE RIUNITE S.r.l.
(511) 05

(111) 1060814
(151) 19.11.2010.
(540)

**MARLBORO FREEDOM TO ENJOY**

(732) Philip Morris Brands Sàrl
(511) 34

(111) 1062451
(151) 08.11.2010.
(540)

**TOOLREX**
Swiss Precision Fluids

(732) Bucher AG Langenthal
(511) 01 02 04

(111) 1070431
(151) 27.12.2010.
(540)

**SPEXER**

(732) CASSIDIAN SAS
(511) 09 12 38 42

(111) 1081455
(151) 15.03.2011.
(540)

(732) PICCOLLO spol. s r.o.
(511) 03 08 09 14 18 20 22 25 28 35

(111) 1081456
(151) 14.06.2011.
(540)

**KONGER**

(732) KONGER Bogdan Gosztyla.
(511) 28

(111) 1081466
(151) 06.06.2011.
(540)

**XTC**

(732) C & T MATRIX LIMITED
(511) 07 42

(111) 1081482
(151) 19.05.2011.
(540)

**CLASSICSPACE**

(732) Daimler AG
(511) 12

(111) 1081488
(151) 18.05.2011.
(540)

**NGM**

(732) NGM Italia s.r.l.
(511) 09 38

(111) 1081489
(151) 18.01.2011.
(540)

**ADVOC**

(732) Advoc Limited
(511) 45

(111) 1081494
(151) 21.10.2010.
(540)

**Molkemichel**

(732) dm-drogerie markt GmbH + Co. KG
(511) 03 05 08 10 16 18 20 21 24 25 28

(111) 1081529
(151) 16.03.2011.
(540)

(732) Intersnack Group GmbH & Co. KG
(511) 29 30 31

(111) 1081532
(151) 03.03.2011.
(540)

(732) MAREBLU S.R.L.
(511) 29

(111) 1081561
(151) 06.04.2011.

(540)

(732) TG OTELCILIK INSAAT VE TURIZM ISLETMECILIGI ANONIM SIRKETI
(511) 41

(111) 1081586
(151) 08.06.2011.
(540)

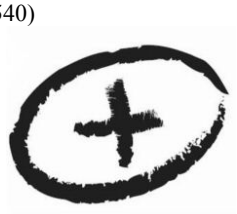

(732) ConvaTec Inc.
(511) 10

(111) 1081589
(151) 07.06.2011.
(540)

**ALCO VALVES**

(732) Xamol Limited
(511) 06

(111) 1081592
(151) 31.05.2011.
(540)

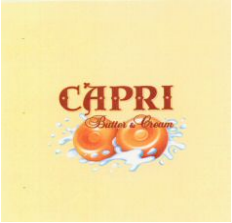


(732) Dotchirne pidpriemstvo "Konditerska korporatzia "Roshen"
(511) 30

(111) 1081624
(151) 06.05.2011.
(540)

(732) BÜCÜRÜK TEKSTİL SANAYİ VE TİCARET ANONİM ŞİRKETİ
(511) 25 35

(111) 1081629
(151) 23.05.2011.
(540)

(732) KB Edelmetall GmbH
(511) 14

(111) 1081639
(151) 19.01.2011.
(540)

(732) LOSTR GROUP a.s.
(511) 06 07 12 19 37 39

(111) 1081655
(151) 02.11.2010.
(540)

(732) GRUPA LOTOS SPÓŁKA AKCYJNA
(511) 04

(111) 1081679
(151) 10.03.2011.
(540)

(732) LAICA S.p.A.
(511) 07 09 10 21

(111) 1081713
(151) 04.05.2011.
(540)

(732) SIRMAGRUP İÇECEK SANAYİ VE TİCARET ANONİM ŞİRKETİ
(511) 32

(111) 1081721
(151) 05.06.2011.
(540)

**ICLOUD**

(732) Apple Inc.
(511) 09

(111) 1081741
(151) 18.05.2011.
(540)

**MELETT**

(732) Melett Ltd
(511) 07

(111) 1081747
(151) 06.06.2011.
(540)

(732) NEG sa
(511) 27

(111) 1081775
(151) 14.06.2011.
(540)

(732) SOREMARTEC SA
(511) 30

(111) 1081776
(151) 14.06.2011.
(540)

(732) SOREMARTEC SA
(511) 30

(111) 1081779
(151) 19.04.2011.
(540)

**SamiGrid**

(732) Huesker Synthetic GmbH
(511) 19

(111) 1081788
(151) 22.03.2011.

(540)

(732) One2play d.o.o.
(511) 14 16 20 28

(111) 1081789
(151) 21.03.2011.
(540)

(732) S.C. ROMPAK S.R.L.
(511) 29 30 35

(111) 1081802
(151) 17.01.2011.
(540)

(732) İRENA ELEKTRİK DIŞ TİCARET KOLLEKTİF ŞİRKETİ AHMET HANPOLAT VE ORTAĞI
(511) 09 11

(111) 1081803
(151) 01.02.2011.
(540)

(732) MARC DORCEL
(511) 09 10 16 38 41

(111) 1081810
(151) 16.03.2011.
(540)

**Ceretem**

(732) Akakiko Kft.
(511) 01 30 31

(111) 1081821
(151) 25.03.2011.
(540)

(732) SABBIONI, Luca IDEASLAB SNC DI MACERATA BENITO, MANDOZZI CRISTIANA E DIN MAHAMEDSAYED MUSLIM MIRZA
(511) 18 25

(111) 1081823
(151) 07.04.2011.
(540)

**PURI CLEAR**

(732) Carl Zeiss Meditec AG
(511) 05

(111) 1081844
(151) 18.05.2011.
(540)

**SECUFLEX**

(732) Hansgrohe AG
(511) 11 17

(111) 1081856
(151) 11.05.2011.
(540)

(732) KRAFT FOODS GLOBAL BRANDS LLC
(511) 30

(111) 1081860
(151) 18.05.2011.
(540)

(732) SkyWork Airlines AG
(511) 39 43

(111) 1081863
(151) 19.04.2011.
(540)

**EMCO**

(732) EMCO MAIER GESELLSCHAFT M.B.H.
(511) 07 08 09 10 35 41 42

(111) 1081864
(151) 19.05.2011.
(540)

**WENGER**

(732) Wenger SA
(511) 21

(111) 1081877
(151) 25.05.2011.
(540)

**MILKA CRISPY SNAX**

(732) Kraft Foods Schweiz Holding GmbH
(511) 30

(111) 1081878
(151) 25.05.2011.
(540)

**LILA STARS SNAX**

(732) Kraft Foods Schweiz Holding GmbH
(511) 30

(111) 1081909
(151) 04.05.2011.
(540)

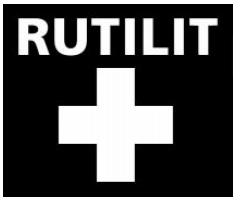


(732) Sachtleben Chemie GmbH
(511) 01 16 42

(111) 1081917
(151) 07.06.2011.
(540)

ТРИЛИПИКС

(732) FOURNIER INDUSTRIE ET SANTE
(511) 05

(111) 1081919
(151) 07.06.2011.
(540)

(732) Bakker & Leenheer Beheer B.V.
(511) 29 31 32

(111) 1081920
(151) 06.05.2011.
(540)

(732) Henkel AG & Co. KGaA
(511) 01 16 17 19

(111) 1081922
(151) 02.03.2011.
(540)

**CAMAIEU**

(732) CAMAIEU INTERNATIONAL
(511) 03 09 14 18 25 26 40

(111) 1081953
(151) 23.02.2011.
(540)

MASTERFOL

(732) MASTERPLAST GROUP ZRT.
(511) 17 19

(111) 1081955
(151) 17.05.2010.
(540)

(732) TRW Intellectual Property Corp.
(511) 09 12

(111) 1081959
(151) 10.05.2011.
(540)

**LIGHT OF FANCY**

(732) Procter & Gamble Manufacturing Cologne GmbH
(511) 03

(111) 1081999
(151) 26.04.2011.
(540)

**GÓRKAL**

(732) GÓRKA CEMENT SPÓŁKA Z OGRANICZONĄ ODPOWIEDZIALNOŚCIĄ
(511) 19

(111) 1082017
(151) 27.01.2011.
(540)

(732) FERRERO S.P.A.
(511) 30

(111) 1082018
(151) 13.01.2011.
(540)

(732) CEUMED KFT
(511) 03 05 10

(111) 1082021
(151) 30.12.2010.
(540)

(732) SHANDONG FUFENG FERMENTATION CO., LTD.
(511) 01 05 29 30

(111) 1082035
(151) 04.03.2011.
(540)

**UNIPEKTIN**

(732) Bucher Industries AG
(511) 06 07 11 37 41 42

(111) 1082036
(151) 22.05.2011.
(540)

**Nutricheckup**

(732) PrevActive Holding SA SCU, SwissCheckUP SA David Jeanneret
(511) 05 44

(111) 1082038
(151) 11.03.2011.
(540)

(732) Alexander v. Kammel
(511) 35 38 41

(111) 1082045
(151) 27.04.2011.
(540)

wangel

(732) Wenzhou Wangel Foreign Trade Co., Ltd.
(511) 11 21

(111) 1082047
(151) 14.03.2011.
(540)

**VIA CONSULT**

(732) via consult GmbH
(511) 05 10 35 41 42 44

(111) 1082054
(151) 04.05.2011.
(540)

**TELIO CS CEM IMPLANT**

(732) Ivoclar Vivadent AG
(511) 05 10

(111) 1082058
(151) 04.05.2011.
(540)

**COMPAKSTAR**

(732) SANOFI-AVENTIS
(511) 10

(111) 1082059
(151) 04.05.2011.
(540)

**INTROSTAR**

(732) SANOFI-AVENTIS
(511) 10

(111) 1082065
(151) 28.04.2011.
(540)

SMILEX

(732) OBSCHESTVO S OGRANICHENNOY OTVETSTVENNOSTYU "SPLAT-COSMETICA"
(511) 21

(111) 1082067
(151) 09.05.2011.
(540)

(732) V&S Vin & Sprit Aktiebolag
(511) 33

(111) 1082076
(151) 29.04.2011.
(540)

**IDO**

(732) MINICONF, S.r.l.
(511) 25

(111) 1082087
(151) 24.05.2011.
(540)

**Rock on**

(732) Intersnack Group GmbH & Co. KG
(511) 29 30 31

(111) 1082099
(151) 10.06.2011.
(540)

**OH YEAH**

(732) ISS Research, LLC
(511) 05

(111) 1082105
(151) 10.05.2011.
(540)

Belebach

(732) Wolfgang Fleischer
(511) 09

(111) 1082108
(151) 20.05.2011.
(540)

fluorten

(732) FLUORTEN S.R.L.
(511) 17

(111) 1082119
(151) 31.05.2011.
(540)

**CHICCO SNAPPY**

(732) ARTSANA S.p.A
(511) 12

(111) 1082122
(151) 08.06.2011.
(540)

**Legalbox**

(732) LEGAL-BOX
(511) 38 39 42

(111) 1082129
(151) 18.05.2011.
(540)

GIULIETTA
CAPULETI

(732) Mara De Guidi
(511) 03 25

(111) 1082133
(151) 28.03.2011.
(540)

(732) Mirjana Slavecki
(511) 35 41 42

(111) 1082144
(151) 11.06.2011.
(540)

**LAWNBOT**

(732) EUROBOTS GmbH
(511) 07

(111) 1082149
(151) 03.05.2011.
(540)

**Nightlife**

(732) Intersnack Group GmbH & Co. KG
(511) 29 30 31

(111) 1082164
(151) 12.05.2011.
(540)

**VMC**

(732) VMC PECHE
(511) 28

(111) 1082166
(151) 19.04.2011.
(540)

(732) LAURENZA NICOLA
(511) 14 35 36

(111) 1082169
(151) 29.06.2011.
(540)

TOPSTONE

(732) TOWER IPCO COMPANY LIMITED
(511) 11 19 20

(111) 1082177
(151) 13.05.2011.
(540)

NERAK

(732) Nerak GmbH Fördertechnik
(511) 07 11

(111) 1082189
(151) 16.03.2011.
(540)

(732) Intersnack Group GmbH & Co. KG
(511) 29 30 31

(111) 1082200
(151) 24.02.2011.
(540)

**DoceStar**

(732) SANOFI-AVENTIS
(511) 10

(111) 1082201
(151) 01.03.2011.
(540)

**LANCHECK**

(732) SANOFI-AVENTIS
(511) 05 09 10

(111) 1082202
(151) 01.03.2011.

(540)

**STARIQ**

(732) SANOFI-AVENTIS
(511) 05 09 10

(111) 1082203
(151) 01.03.2011.
(540)

**BOLUSTAR**

(732) SANOFI-AVENTIS
(511) 05 09 10

(111) 1082204
(151) 01.03.2011.
(540)

**BGSTAR MEAL**

(732) SANOFI-AVENTIS
(511) 05 09 10

(111) 1082206
(151) 25.03.2011.
(540)

**BGStarCompanion**

(732) SANOFI-AVENTIS
(511) 05 09 10

(111) 1082208
(151) 01.04.2011.
(540)

**GOVTERI**

(732) SANOFI-AVENTIS
(511) 05

(111) 1082217
(151) 29.04.2011.
(540)

**Jaffa Jupi**

(732) Koktel Trejd Dooel Tetovo
(511) 25 32 43

(111) 1082218
(151) 29.04.2011.
(540)

**Jaffa**

(732) Koktel Trejd Dooel Tetovo
(511) 25 32 43

(111) 1082232
(151) 23.05.2011.
(540)

**OPTIMIK**

(732) Rastislav Korytár
(511) 09 42

(111) 1054211
(151) 06.09.2010.
(540)

(732) Stannah Lifts Holdings Limited
(511) 07 37

(111) 1082253
(151) 26.05.2011.
(540)

JEORDIES

(732) HÜLAY TEKSTİL SANAYİ VE TİCARET LİMİTED ŞİRKETİ
(511) 25 35

(111) 1082258
(151) 17.05.2011.
(540)

(732) Perutnina Ptuj d.d.
(511) 29 35 41

(111) 1082260
(151) 12.05.2011.
(540)

GUITAR PRO

(732) AROBAS MUSIC
(511) 15 38 41 42

(111) 1082261
(151) 13.05.2011.
(540)

(732) FD Consulting AG
(511) 03 35 44 45

(111) 1082280
(151) 18.03.2011.
(540)

(732) E-MAK MAKINE INSAAT TICARET VE SANAYI LIMITED SIRKETI
(511) 07 11

(111) 1082284
(151) 14.06.2011.
(540)

**BREADY**

(732) SOREMARTEC SA
(511) 30

(111) 1082343
(151) 10.05.2011.
(540)

(732) Kompan A/S
(511) 28

(111) 1082375
(151) 12.05.2011.
(540)

**EFFET MIRACLE**

(732) LANCOME PARFUMS ET BEAUTE & CIE
(511) 03

(111) 1082376
(151) 07.06.2011.
(540)

(732) NOVARTIS AG
(511) 05 10

(111) 1082378
(151) 07.06.2011.
(540)

(732) NOVARTIS AG
(511) 05 10

(111) 1082383
(151) 20.05.2011.
(540)

**my baby**

(732) HERCULES PRODUCTS S.A. FRANCE
(511) 16

(111) 1082384
(151) 20.05.2011.
(540)

**my lady**

(732) HERCULES PRODUCTS S.A. FRANCE
(511) 05

(111) 1082391
(151) 10.05.2011.
(540)

(732) Soga S.p.A.
(511) 07

(111) 1082423
(151) 06.06.2011.
(540)

**CHANNEL**

(732) C & T MATRIX LIMITED
(511) 07 42

(111) 1082439
(151) 05.04.2011.
(540)

**LIOFILCHEM**

(732) LIOFILCHEM S.R.L.
(511) 01 05 09 35

(111) 1082474
(151) 10.06.2011.
(540)

(732) KANGNAI GROUP CO., LTD.
(511) 18

(111) 1082480
(151) 25.10.2010.
(540)

(732) Merck KGaA
(511) 05 29 30

(111) 1082485
(151) 19.02.2011.
(540)

**Rock Rebel by EMP**

(732) E.M.P. Merchandising Handelsgesellschaft mbH
(511) 09 16 25 35 38 41

(111) 1082491
(151) 21.03.2011.
(540)

(732) SOCIETE EUROPEENNE DE CARDIOLOGIE
(511) 35 38 41 42

(111) 1082518
(151) 20.12.2010.
(540)

**ONEGO**

(732) UAB "KRS"
(511) 35

(111) 1082545
(151) 28.03.2011.
(540)

(732) Tijs M. Verwest
(511) 09 16 25 41

(111) 1082553
(151) 20.04.2011.
(540)

**AllDrive**

(732) Škoda Auto a.s.
(511) 12

(111) 1082569
(151) 03.05.2011.
(540)

(732) PERNOD RICARD, société anonyme
(511) 16 41 45

(111) 1082571
(151) 03.05.2011.
(540)

(732) "UNITED FASHION BRANDS S.A. OF IMPORTS, EXPORTS, TRADING AND AGENCIES OF CLOTHING"
(511) 25

(111) 1082581
(151) 05.05.2011.
(540)

(732) PRYSMIAN CABLES ET SYSTEMES FRANCE
(511) 09 11 37 42

(111) 1082582
(151) 05.05.2011.
(540)

(732) L'OREAL
(511) 03

(111) 1082599
(151) 17.05.2011.
(540)

**TRICAST**

(732) SCHNEIDER ELECTRIC INDUSTRIES SAS
(511) 09

(111) 1082610
(151) 23.05.2011.
(540)

**SHARKLET**

(732) Airbus SAS
(511) 12 39 42

(111) 1082622
(151) 12.05.2011.
(540)

(732) ALMAS CHP S.A.
(511) 29 30 33 35 43

(111) 1082641
(151) 24.05.2011.
(540)

(732) Nupo A/S
(511) 05 29

(111) 1082653
(151) 12.05.2011.
(540)

**AVUS**

(732) Martin Neugebauer
(511) 09 35 38

(111) 1082656
(151) 14.06.2011.
(540)

**VOLODYA & the BEARS**

(732) LUKAS TRADING CORP.
(511) 33

(111) 1082673
(151) 30.05.2011.
(540)

(732) MHCS
(511) 32 33 43

(111) 1082681
(151) 10.06.2011.
(540)

**VISIONNAIRE**

(732) LANCOME PARFUMS ET BEAUTE & CIE
(511) 03

(111) 1082683
(151) 15.06.2011.
(540)

**CATERPAK**

(732) McCain Foods Holland B.V.
(511) 29

(111) 1082699
(151) 09.06.2011.
(540)

**WATERSHINE**

(732) L'OREAL
(511) 03

(111) 1082706
(151) 02.12.2010.
(540)

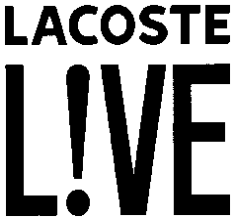


(732) LACOSTE
(511) 03 09 14 18 24 25

(111) 1082707
(151) 04.02.2011.
(540)

**SPEEDELIA**

(732) ALSTOM
(511) 09 12 37 39

(111) 1082711
(151) 31.01.2011.
(540)

(732) UNICOMPANY S.P.A.
(511) 03

(111) 1082712
(151) 21.04.2011.

(540)

**HOTLINE**

(732) The Gates Corporation
(511) 17

(111) 1082739
(151) 03.03.2011.
(540)

**PROEBIZ**

(732) NAR marketing s.r.o.
(511) 35 41 42

(111) 1082759
(151) 23.06.2011.
(540)

**NAILEXPERT BY WARTNER**

(732) Chefaro Ireland Ltd.
(511) 05

(111) 1082812
(151) 07.01.2011.
(540)

**MANCHESTER UNITED**

(732) MANCHESTER UNITED LIMITED
(511) 12 14 16 18 20 21 24 26 28

(111) 1082814
(151) 07.01.2011.
(540)

(732) MANCHESTER UNITED LIMITED
(511) 09 12 14 16 18 20 21 24 26 28 36

(111) 1082816
(151) 20.12.2010.
(540)

(732) WORLD MEDICINE İLAÇLARI LİMİTED ŞİRKETİ
(511) 05 10 35 44

(111) 1082831
(151) 15.02.2011.
(540)

(732) NORTON HEALTHCARE LIMITED
(511) 05 10

(111) 1082834
(151) 21.03.2011.
(540)

Тетра

(732) Tetra GmbH
(511) 01 05 07 09 11 21 31

(111) 1082850
(151) 23.03.2011.
(540)

**OZZION**

(732) Zentiva, k.s.
(511) 05

(111) 1082858
(151) 04.05.2011.
(540)

**ECLIPS**

(732) Häfele GmbH & Co KG
(511) 06 20

(111) 1082860
(151) 15.04.2011.
(540)

(732) FIRO GmbH
(511) 01 17

(111) 1082874
(151) 12.05.2011.
(540)

(732) AUTOSOL International GmbH
(511) 01 03

(111) 1082890
(151) 01.06.2011.
(540)

**HERITAGE DENIM WORKSHOP**

(732) COFRA Holding AG
(511) 18 25 35

(111) 1082904
(151) 13.05.2011.
(540)

(732) Auto-Teile-Ring GmbH
(511) 09 11 12 35 36 37 39 45

(111) 1082923
(151) 09.06.2011.
(540)

(732) DUKAT d.d.
(511) 29

(111) 1082927
(151) 27.05.2011.
(540)

**CHIPS'Y KING**

(732) DPTTGU "MDZ ROBIN" DOO eksport-import
(511) 29

(111) 1082983
(151) 06.06.2011.
(540)

(732) Volkswagen Aktiengesellschaft
(511) 12 35 37

(111) 1083012
(151) 23.05.2011.
(540)

**REGENT**

(732) BASF Agro Trademarks GmbH
(511) 01 05 31

(111) 1083019
(151) 11.04.2011.
(540)

(732) Vision International People Group Public Limited
(511) 05 30

(111) 1083024
(151) 07.12.2010.
(540)

**SuperSilencePlus**

(732) BSH Bosch und Siemens Hausgeräte GmbH
(511) 07 09 11

(111) 1083047
(151) 09.11.2010.
(540)

(732) DAIKIN INDUSTRIES, LTD.
(511) 11

(111) 1083058
(151) 22.12.2010.
(540)

**NIKEL**

(732) Mirjana Brle ? i ?
(511) 03

(111) 1083062
(151) 28.12.2010.
(540)

**SAGA ONE-UP**

(732) Metsä Tissue Oyj
(511) 06 16

(111) 1083072
(151) 03.02.2011.

(540)

(732) Kotányi GmbH
(511) 29 30 35

(111) 1083089
(151) 29.03.2011.
(540)

essence

(732) BORA CREATIONS S.L.
(511) 03 04 08 14 16 21 25 26 35

(111) 1083091
(151) 31.03.2011.
(540)

B.Well

(732) Zakrytoe aktsionernoe obshchestvo "Alfa-Medika"
(511) 10

(111) 1083093
(151) 07.04.2011.
(540)

DONNA GIOVANNA

(732) VENUS BRIDAL ITALY S.R.L.
(511) 25

(111) 1083104
(151) 13.05.2011.
(540)

ulica

(732) NINGBO ULICA SOLAR SCIENCE & TECHNOLOGY CO., LTD.
(511) 09

(111) 1083131
(151) 29.04.2011.
(540)

**MINIBANDA**

(732) MINICONF S.r.l.
(511) 25

(111) 1083132
(151) 29.04.2011.
(540)

**SARABANDA**

(732) MINICONF S.r.l.
(511) 25

(111) 1083133
(151) 20.05.2011.
(540)

D+H

(732) D+H Mechatronic AG
(511) 06 07 09 11 35 37 40 42

(111) 1083149
(151) 07.06.2011.
(540)

**TECHNO FEEL**

(732) RENAULT s.a.s.
(511) 12

(111) 1083153
(151) 12.05.2011.
(540)

AVUS

(732) Martin Neugebauer
(511) 09 35 38

(111) 1083173
(151) 14.06.2011.
(540)

**AQUA.ONE**

(732) BIOTHERM
(511) 03

(111) 1083178
(151) 21.06.2011.
(540)

(732) LANCOME PARFUMS ET BEAUTE & CIE
(511) 03

(111) 1083185
(151) 03.06.2011.
(540)

CEGİSA

(732) CELEBI INSAAT KONFEKSIYON GIDA MADDELERI SANAYI VE TICARET LIMITED SIRKETI
(511) 18 25 35

(111) 1083218
(151) 08.04.2011.
(540)

VIACONSULT

(732) via consult GmbH
(511) 05 10 35 41 42 44

(111) 1083226
(151) 23.03.2011.
(540)

(732) DU PAREIL AU MEME
(511) 18 24 25

(111) 1083228
(151) 18.05.2011.
(540)

**Charles Vögele**

(732) Cosmos Mode AG
(511) 18 25 35

(111) 1083230
(151) 30.03.2011.
(540)

flint

(732) SOLDEX LIMITED
(511) 29 30

(111) 1083235
(151) 21.10.2010.
(540)

**Heidi von Klee**

(732) dm-drogerie markt GmbH + Co. KG
(511) 03 05 08 10 16 18 20 21 24 25 28

(111) 1083244
(151) 10.06.2011.
(540)

PAN AM

(732) Pan American World Airways, Inc.
(511) 41

(111) 1083258
(151) 03.02.2011.
(540)

KOTÁNYI 1881

(732) Kotányi GmbH
(511) 29 30 35

(111) 1083275
(151) 11.05.2011.
(540)

(732) Oxford Nanopore Technologies Limited
(511) 09 10 42

(111) 1083276
(151) 04.04.2011.
(540)

FLEXPORT

(732) BEKBABERK TEKSTIL SANAYI VE DIS TICARET LIMITED SIRKETI
(511) 18 25 35

**2. Накнадна назначења за Републику Србију** (Subsequant designations for Republic of Serbia)

(111) 1016661
(540)

PrettyBallerinas

(732) GRUPO MASCARÓ, S.L.
(511) 03 14 25

(111) 1031863
(540)

**BERRAK**

(732) BERRAK TEKSTİL SANAYİ VE TİCARET LİMİTED ŞİRKETİ
(511) 25

(111) 1046388
(540)

**ESTIMA**

(732) EFFIK S.A.
(511) 05

(111) 1067437
(540)

(732) Driscoll Strawberry Associates, Inc.
(511) 31

(111) 435016B
(540)

**ROCGEL**

(732) DEBREGEAS ET ASSOCIES PHARMA
(511) 05

(111) 727479
(540)

**PROGEFFIK**

(732) EFFIK S.A.
(511) 05

(111) 741883
(540)

**SIROCCO**

(732) A. Kuster Sirocco AG
(511) 30 32

(111) 849264
(540)

POLYMERON

(732) KEMİTEKS KİMYA SANAYİ VE TİCARET ANONİM ŞİRKETİ
(511) 01 02

(111) 887782
(540)

(732) H & M Hennes & Mauritz AB
(511) 14 18 25

(111) 951862
(540)

**HOKOEX**

(732) Hokochemie GmbH
(511) 01 05 44

(111) 952832
(540)

**LIVAZO**

(732) KOWA COMPANY, LTD
(511) 05

(111) 952833
(540)

**ALIPZA**

(732) KOWA COMPANY, LTD
(511) 05

(111) 952835
(540)

**VEZEPRA**

(732) KOWA COMPANY, LTD
(511) 05

(111) 1056327
(540)

**AVITERA**

(732) Huntsman Advanced Materials (Switzerland) GmbH
(511) 01 02

(111) 1059485
(540)

**ZELBORAF**

(732) F. Hoffmann-La Roche AG
(511) 05

(111) 699329
(540)

**KITON**

(732) CIRO PAONE S.p.A.
(511) 09 14 16 19 25 34

(111) 793370
(540)

TARIQUET

(732) Société Civile d'Exploitation Agricole SCV CHATEAU DU TARIQUET
(511) 32 33 40

(111) 827704
(540)

**DANURIT**

(732) Richter Gedeon Nyrt.
(511) 05

(111) 839494
(540)

**CALIBRA**

(732) GOLDPET s.r.o.
(511) 03 18 31

(111) 846428
(540)

**PRAC-TIC**

(732) Novartis AG
(511) 05

(111) 922719
(540)

**FORIELLE**

(732) Ares Trading S.A.
(511) 05

(111) 945398
(540)

ZOOMLION

(732) Changsha Zoomlion Heavy Industry Science & Technology Development Co., Ltd
(511) 07

(111) 953565
(540)

**LACTOFILTRUM**

(732) Dikovskiy Vladimir Anatolievich
(511) 05

(111) 986321
(540)

(732) ISIC Association
(511) 16 35 41

(111) 1003685
(540)

**mazine**

(732) Henry Canton
(511) 03 09 18 25 41 45

(111) 723692
(540)

GAMO

(732) GAMO OUTDOOR, S.L.
(511) 09 13 25 28

(111) 830731
(540)

**CWT**

(732) CW Travel Holdings, N.V.
(511) 36 39 41 43

(111) 960519
(540)

GREENWHEEL

(732) SHENZHEN GREENWHEEL ELECTRIC VEHICLE CO., LTD.
(511) 12

(111) 1016680
(540)

(732) AGREGATY FOGO Sp. z o. o.
(511) 07 09 37 40

(111) 1041018
(540)

(732) Nechytailo-Ridjok Olga Volodymyrivna Tovarystvo z obmezhenoju vidpovidal'nistju "Nacional'na gorilchana kompanija"
(511) 33

(111) 1042760
(540)

ONLEAD

(732) ZHANG ZHONG WU
(511) 18 24 25

(111) 1047560
(540)

**WILLFACT**

(732) Laboratoire Français du Fractionnement et des Biotechnologies
(511) 05

(111) 1061425
(540)

**CLTN**

(732) Etos S.A.
(511) 03 09 18 20 25 35

(111) 962272
(540)

(732) POCLAIN HYDRAULICS
(511) 07 09 12 37 42

(111) 996478
(540)

**FRAMCOLOR**

(732) FRAMESI S.p.A.
(511) 03

(111) 1010310
(540)

PYLONES

(732) GUILLEMET Jacques Henri François HIRZEL Léna Irène
(511) 03 08 09 11 14 16 17 18 20 21 24 25 28 34 35 43

(111) 1067245
(540)

**ZUBALET**

(732) EISAI R&D MANAGEMENT CO., LTD.
(511) 05

(111) 1067820
(540)

Azympa

(732) Eisai R&D Management Co., Ltd.
(511) 05

(111) 1067822
(540)

Fycompa

(732) Eisai R&D Management Co., Ltd.
(511) 05

(111) 1067823
(540)

Epzardi

(732) Eisai R&D Management Co., Ltd.
(511) 05

(111) 418482
(540)

**Georges DUBOEUF**

(732) LES VINS GEORGES DUBOEUF, Société anonyme
(511) 32 33

(111) 748830
(540)

(732) SW Umwelttechnik Stoiser & Wolschner AG
(511) 11 37 42

(111) 830773
(540)

**ILIADA**

(732) AGROTIKI VIOMICHANIA MESSINIAS S.A. (AGROVIM S.A.)
(511) 29 31

(111) 833069
(540)

**ROLLY TOYS**

(732) Franz Schneider GmbH & Co KG
(511) 28

(111) 833507
(540)

**ROLLY**

(732) Franz Schneider GmbH & Co KG
(511) 28

(111) 870996
(540)

**ixConnect**

(732) Häfele GmbH & Co KG
(511) 06 19 20

(111) 876135
(540)

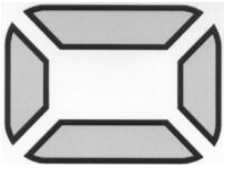

(732) Stanno Holding B.V.
(511) 18 25 28

(111) 891158
(540)

**FINLUX**

(732) Vestel Dis Ticaret A.S.
(511) 07 09 11

(111) 906534
(540)

**SPX**

(732) SILHOUETTE International Schmied AG
(511) 09 42

(111) 919844
(540)

**YARRAH**

(732) Roelevink Beheer III B.V.
(511) 31

(111) 957656
(540)

**ACO SHOWERDRAIN**

(732) ACO Severin Ahlmann GmbH & Co. KG
(511) 06 11 19

(111) 977321
(540)

ISTODAX

(732) Celgene Corporation
(511) 05

(111) 1008813
(540)

**urbanears**

(732) Zound Industries International AB
(511) 09 18 25

(111) 1010760
(540)

**Kokosal**

(732) PZ CUSSONS POLSKA S.A.
(511) 03 05

(111) 1013303
(540)

**coloud**

(732) Zound Industries International AB
(511) 09 18

(111) 1023680
(540)

(732) FEDERATION INTERNATIONALE DES INGENIEURS CONSEILS (FIDIC)
(511) 35 41

(111) 1031490
(540)

(732) PASİFİK BİLGİSAYAR ULUSLARARASI TİCARET LİMİTED ŞİRKETİ
(511) 09

(111) 1044025
(540)

(732) S.B.S. TEKSTİL SANAYİ VE TİCARET ANONİM ŞİRKETİ
(511) 25

(111) 1051147
(540)

celio*CLUB

(732) CELIO FRANCE
(511) 03 09 14 18 24 25

(111) 1054544
(540)

du pareil au même

(732) DU PAREIL AU MEME
(511) 18 24 25

(111) 1059483
(540)

**BRAFYTE**

(732) F. Hoffmann-La Roche AG
(511) 05

(111) 1061326
(540)

miss poem

(732) MİSS POEM TEKSTİL VE MAĞAZACILIK İTHALAT İHRACAT LİMİTED ŞİRKETİ
(511) 18 35

(111) 1067577
(540)

(732) "EQUATORIAL ENERGY INVESTMENTS" LTD
(511) 16 34 35

(111) 1067821
(540)

Fycampa

(732) Eisai R&D Management Co., Ltd.
(511) 05

(111) 1069305
(540)

**BIRNER**

(732) Birner GmbH
(511) 01 02 03 04 05 07 09 11 12 27 35 37

(111) 1070450
(540)

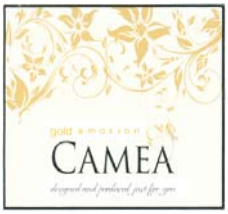


(732) "EQUATORIAL ENERGY INVESTMENTS" LTD
(511) 34

(111) 1070699
(540)

(732) Birner GmbH
(511) 01 02 03 04 05 07 09 11 12 27 35 37

(111) 717007
(540)

**Amikozit**

(732) ZENTIVA SAGLIK URUNLERI SANAYI VE TICARET ANONIM SIRKETI
(511) 05

(111) 739437
(540)

**HAUPA**

(732) HAUPA GmbH & Co. KG
(511) 06 07 08 09 17

(111) 803646
(540)

**IPNFA**

(732) IPNFA c/o Frits Westerholt
(511) 41 42

(111) 830871
(540)

**EPI-MEK**

(732) Syngenta Participations AG
(511) 05

(111) 855994
(540)

**VESTAS**

(732) Vestas Wind Systems A/S
(511) 07 09 37 42

(111) 881589
(540)

EARTH MAMA ANGEL BABY

(732) Earth Mama Angel Baby, LLC
(511) 03 30

(111) 891350
(540)

**SUN PEI**

(732) Lidl Stiftung & Co. KG
(511) 29 30 31 32 33

(111) 924378
(540)

**FIDIC**

(732) Fédération Internationale des Ingénieurs-Conseils (FIDIC)
(511) 35 41

(111) 935517
(540)

**TRAJENTA**

(732) Boehringer Ingelheim International GmbH
(511) 05

(111) 1023588
(540)

(732) Joint Stock Company "ZARUBEZHNEFT"
(511) 01 04 07 11 35 37 39 40 42 43 45

(111) 1023589
(540)

(732) Joint Stock Company "ZARUBEZHNEFT"
(511) 01 04 07 11 35 37 39 40 42 43 45

(111) 1029046
(540)

**YOGURT CARNIA**

(732) Consorzio Cooperativo Latterie Friulane società cooperativa agricola
(511) 29

(111) 666558
(540)

**SENSIBIO**

(732) LABORATOIRE BIODERMA
(511) 03 05

(111) 688492
(540)

**PRIMACAÏNE**

(732) PRODUITS DENTAIRES PIERRE ROLLAND (SAS)
(511) 05

(111) 715408
(540)

**XLR**

(732) Wacker Chemie AG
(511) 01 02 17

(111) 759659
(540)

(732) Sanpellegrino S.p.A.
(511) 32

(111) 895421
(540)

(732) TENUTA SANTOME' DI SPINAZZE' ALAN
(511) 33

(111) 905541
(540)

(732) Payer International Technologies GmbH
(511) 08 09 11

(111) 980230
(540)

(732) REPLY S.P.A.
(511) 09 38 42

(111) 1001296
(540)

**AZAKA**

(732) CHEMINOVA A/S
(511) 05

(111) 1039782
(540)

(732) Lidl Stiftung & Co. KG
(511) 07 08 09 11 12 13 14 18 20 21 22 24 25 27 28

(111) 1053493
(540)

(732) VIGOOLE ELECTRONICS (SHENZHEN) COMPANY LIMITED
(511) 09

(111) 1064969
(540)

**PARLIAMENT MIDNIGHT MAGIC**

(732) Philip Morris Products S.A.
(511) 34

(111) 1064970
(540)

**THE ROOM BY PARLIAMENT**

(732) Philip Morris Products S.A.
(511) 34

(111) 1065518
(540)

(732) BFT S.p.A.
(511) 07 09

(111) 1072161
(540)

**YOUNGBLOOD**

(732) Youngblood Skin Care Products, LLC
(511) 03 21

(111) 1075998
(540)

(732) Brands Environment Establishment
(511) 09 12 20 29 30 32 42

(111) 215225
(540)

**FETRILON**

(732) Compo GmbH & Co.KG
(511) 01

(111) 844754
(540)

(732) WENZHOUSHI PULAISI XIEYE YOUXIAN GONGSI
(511) 25

(111) 855565
(540)

**FENDOZIN**

(732) BASF SE
(511) 01 02 05

(111) 880443
(540)

**EFECTIS**

(732) Efectis Holding SAS
(511) 37 41 42

(111) 938365
(540)

**i.Profiler**

(732) Carl Zeiss Vision GmbH
(511) 09 10

(111) 947352
(540)

(732) Garcia B.V.
(511) 18 25 35

(111) 949274
(540)

**KINESIO**

(732) Kinesio IP LLC
(511) 41

(111) 959643
(540)

**CERTICOR**

(732) SYNGENTA PARTICIPATIONS AG
(511) 01 05

(111) 990621
(540)

**NUTRISEED**

(732) COMPO GmbH & Co. KG
(511) 01

(111) 1003762
(540)

**у.р**

(732) COFRA Holding AG
(511) 03 09 18 25

(111) 1016498
(540)

**Водка «БУХАНКА»**

(732) Obschestvo s ogranichennoy otvetstvennostyu "Rosalko"
(511) 33

(111) 1031897
(540)

**WALTON**

(732) RAY TOBACCO INC. LLC.
(511) 34

(111) 1046882
(540)

**1841**

(732) COFRA Holding AG
(511) 16 25 35

(111) 1053198
(540)

(732) DSR Baltic Logistik GmbH
(511) 39 41 43 44

(111) 234808
(540)

**Hakaphos**

(732) Compo GmbH & Co.KG
(511) 01

(111) 407978
(540)

**LOCAPRED**

(732) PIERRE FABRE DERMATOLOGIE
(511) 05

(111) 439249
(540)

**CHATEAU LEOVILLE BARTON**

(732) SOCIETE DES CHATEAUX LANGOA ET LEOVILLE BARTON
(511) 33

(111) 554178
(540)

**Angelo Litrico**

(732) COFRA Holding AG
(511) 09

(111) 559303
(540)

**LE PETIT CHEVAL**

(732) SOCIÉTÉ CIVILE DU CHEVAL BLANC, Société civile
(511) 33

(111) 567872
(540)

**VIN SIGNE**

(732) FLARONIS S.A.
(511) 33

(111) 609106
(540)

**HEMOLEVEN**

(732) LABORATOIRE FRANCAIS DU FRACTIONNEMENT ET DES BIOTECHNOLOGIES
(511) 05 16

(111) 724080A
(540)

**AMERICAN COLA**

(732) The Monarch Beverage Company, Inc.
(511) 32

(111) 750947
(540)

**MERI BY MURA**

(732) CALZIFICIO MURA S.P.A.
(511) 25

(111) 752152
(540)

(732) Dukat d.d.
(511) 29

(111) 760433
(540)

**SOLEO**

(732) KAUFLAND Česká republika v.o.s.
(511) 29 30 32

(111) 795673
(540)

**NATURAL HONEY**

(732) THE COLOMER GROUP SPAIN, S.L.
(511) 03

(111) 843442
(540)

**MULTI SOLA**

(732) PIVOVARNA UNION D.D.
(511) 32

(111) 846579
(540)

**OTTO KERN**

(732) Otto Kern GmbH
(511) 03 18 25

(111) 875471
(540)

(732) COFRA Holding AG
(511) 09 18 25

(111) 930352
(540)

**don pedro**

(732) ADRIAFRUIT ITALIA S.P.A.
(511) 31

(111) 933189
(540)

**i.Scription**

(732) Carl Zeiss Vision GmbH
(511) 09

(111) 937902
(540)

(732) COFRA Holding AG
(511) 18 24 25

(111) 937903
(540)

(732) COFRA Holding AG
(511) 18 24 25

(111) 937940
(540)

(732) COFRA Holding AG
(511) 14 18 25 28 35

(111) 942622
(540)

**PERFECT TOUCH**

(732) COFRA Holding AG
(511) 18 24 25

(111) 943069
(540)

**Хлібний Дар**

(732) Sviatoslav Igorovych NECHYTAILO
(511) 33

(111) 956645
(540)

**BAG TO NATURE**

(732) COFRA Holding AG
(511) 18 25 35

(111) 982630
(540)

**YESSICA PURE**

(732) COFRA Holding AG
(511) 09 18 25

# Дизајн / Designs

**Међународни кодови за идентификацију библиографских
података о дизајну према - WIPO ST. 80**

**Recommendation concerning bibliographic data
To industrial designs - WIPO ST. 80**

| | | |
|---|---|---|
| Регистарски број | **(11)** | Number of registration |
| Датум регистрације | **(15)** | Date of the registration |
| Број пријаве | **(21)** | Number of the application |
| Датум подношења пријаве | **(22)** | Date of filing of the application |
| Подаци о изложбеном праву првенства | **(23)** | Exhibition priority data |
| Број пријављеног дизајна | **(28)** | Number of industrial designs included in the application |
| Подаци о праву првенства на основу Париске конвенције | **(30)** | Data relating to priority under the Paris Convention |
| Класа и подкласа Локарнске класификације | **(51)** | Class and subclass of the Locarno Classification |
| Назив дизајна | **(54)** | Title of the industrial design |
| Име аутора дизајна | **(72)** | Name of the creator |
| Име и адреса носиоца права | **(73)** | Name and address of the owner |
| Име и адреса пуномоћника | **(74)** | Name and address of the repesentative |

ПРЕСТАНАК ВАЖНОСТИ РЕГИСТРОВАНОГ ДИЗАЈНА ОД 06. ДЕЦЕМБРА 2010. ДО 05. ФЕБРУАРА 2011. ГОДИНЕ

**Termination of validity of Registered Desion from December 6th, 2010 to Februaru 5th, 2011.**

## 1. Због неплаћања таксе за одржавање права:

Дизајн бр. **10315** чији је носилац Мајсторовић Војислав, Вукасовићева 55, 11000 Београд, RS, престао је да важи дана 20.12.2010. године.

Дизајн бр. **10320** чији је носилац Вулин Јован, Армина Лајнинега 11, 21240 Тител, RS, престао је да важи дана 30.12.2010. године.

Дизајн бр. **10375** чији је носилац PERTINI TOYS d.o.o. Синђелићева 2а, 11000 Београд, RS, престао је да важи дана 07.12.2010. године.

Дизајн бр. **10377** чији је носилац Миљковић Мијат, Хаџи Ђерина 23, 11000 Београд, RS, престао је да важи дана 10.12.2010. године.

# Подлистак
# Supplement

| САДРЖАЈ | CONTENTS |
|---|---|
| • **УЛОГА ИНТЕЛЕКТУАЛНЕ СВОЈИНЕ, ПОСЕБНО ЖИГОВА И ГЕОГРАФСКИХ ОЗНАКА, У КРЕИРАЊУ, РАЗВОЈУ И ЈАЧАЊУ НАЦИОНАЛНОГ БРЕНДА, Извештај, Истанбул, 26. и 27. мај 2011. године** | • **THE ROLE OF INTELLECTUAL PROPERTY, IN PARTICULAR TRADEMARKS AND GEOGRAPHICAL INDICATIONS IN THE CREATION, DEVELOPMENT AND STRENTHENING OF THE NATIONAL BREND, Report, Istanbule, May 26-27, 2011** |
| • **ИЗВЕШТАЈ СА 22-е СЕДНИЦЕ WIPO КОМИТЕТА ЗА АУТОРСКО И СРОДНА ПРАВА, Женева, Швајцарска, 15-24. јуни 2011. године** | • **REPORT FROM THE 22ND SESSION OF THE WIPO COMMITTEE FOR COPYRIGHT AND RELATED RIGHTS, Geneva, Switzerland, 15-24 June, 2011** |

# УЛОГА ИНТЕЛЕКТУАЛНЕ СВОЈИНЕ, ПОСЕБНО ЖИГОВА И ГЕОГРАФСКИХ ОЗНАКА, У КРЕИРАЊУ, РАЗВОЈУ И ЈАЧАЊУ НАЦИОНАЛНОГ БРЕНДА

**Истанбул, 26. и 27. мај 2011. године**

**И З В Е Ш Т А Ј**

***Мирјана Шарић,*** начелник Одељења за жигове

У оквиру Светске организације за интелектуалну својину установљена је Дивизија за одређене земље Европе и Азије (The Division for Certain Countries in Europe and Asia - DCEA) ради успостављања сарадње WIPO-а са земљама овог „региона“ који обухвата централноевропске и балтичке земље, централноазијске, источноевропске и кавкаске, као и неке медитеранске земље. У стратегије ове Дивизије, између осталог, спада и рад на „инструментима“ или „упутствима“ (tools and guidance), узимајући у обзир особености земаља у транзицији, одговарајући на њихове специфичне потребе и изазове, као и искуства стечена кроз активности везане за интелектуалну својину. Један од тих „инструмената“је и Брендирање нације у земљама у транзицији (Nation Branding in Countries in Transition). Радионица са темом Улога интелектуалне својине, посебно жигова и географских ознака, у креирању, развоју и јачању националног бренда, први пут је одржана у Прагу 2009. године, други пут у Јалти 2010. године. Трећа по реду, којој је присуствовала и Република Србија одржана је Истанбулу 26. и 27. маја 2011. године. Представник Завода за интелектуалну својину била ја Мирјана Шарић, начелник Одељења за жигове.

Радионица је организована у сарадњи Патентног завода Турске и Wipo-а. У уводној речи домаћина, наглашено је да је на светском тржишту, са огромном бројем производа из разних крајева света, потрошачима све теже да направе избор. Наступ земаља у развоју (у транзицији) утолико је комплекснији јер у већој мери морају да се боре за конкурентност својих производа и да створе имиџ земље порекла како би привукли потрошаче. Турска је напорно радила на стварању националног бренда, мада и даље нема систематског приступа, унификоване и интерсекторске комуникације.

Михаљ Свантнер, директор Дивизије за одређене земље Европе и Азије нагласио је да су државе које припадају овој Дивизији у много чему различите, у политичком систему, култури, религији; оно што их чини сличнима, то је будућа перспектива, то су земље у транзицији више у практичном него у политичком смислу те речи.

Брендирају се производи, људи и места. Професор маркетинга Dr. Özlem Sandikci са Билкент Универзитета у Анкари, која је била укључена у брендирање нације на државном нивоу, дала је пример турске компаније Karsan Company која је у Њујорку победила на тендеру за градски такси, након чега је у новинама објављен текст од стране угледног новинара о томе да је њујоршком таксију дошао крај. Било је потребно замислити се зашто је присутна таква бојазан и негативна предвиђања само на основу чињенице да ће их убудуће превозити возила турске компаније? Да ли само зато што то није поуздана компанија у САД? Бренд није само знак или име. Потрошачи теже да разликују производе, бренд има симболичко значење. У овоме фактор земље порекла игра битну улогу. Брендирање значи постизање значења иза симбола. У последње време даје се значај видљивом сегменту производа. Људи бирају на основу изгледа логоа; то није разуман избор, али потрошачи преферирају брендове.

На листи 100 најпознатијих брендова нема ни једног турског. Напори неких држава дају резултате. Мексико почиње успешно да се појављује на светском тржишту. Затим, Дубаи, спроводи дугорочну визију. За разлику од остатка Емирата, нема много нафте, али оно што га чини привлачним је понуда, коју чине обећања садржана у том бренду са разних аспеката – туристички (обични посетиоци, радници), финансијски (tax-free, привлачне могућности за стицање непокретне имовине, скупље некретнине), велика мобилност људи. Дубаи је постао моћан бренд.

Са друге стране, поставља се питање да ли је разумно брендирати државу (или націју). Брендирање нације је нова дисциплина у маркетингу, више економска и прагматична, него академска. Не постоји развијена техника брендирања, то је још увек хаотична област. Као резултат брендирања долази до већег инвестирања у земљу, али не доприносе сва развоју државе у једнакој мери. Најбољи пример је Турска. Она је на плану туризма направила велики успех (налази се у самом врху, у 10 најпожељнијих дестинација света), али бренд индекс земље као целине још увек је на веома ниском нивоу. „All inclusive“ туризам не омогућава туристима да открију много тога о Турској и виде знаменитости. Утисак који добију у оквиру туристичког аранжмана може бити и негативан. Рекламне кампање представљају искључиво оријенталну слику Турске. Идентитет и имиџ су различити појмови. У туризму се слогани мењају из године у годину, па то не представља дугорочан механизам стварања бренда.

Заједница турске дијаспоре није искоришћена правилно у циљу промоције Турске.

Брендирање Турске - Асоцијација Рекламних Агенција Турске, уз подршку малих и средњих предузећа која се баве извозом, двадесет невладиних организација (укупно 200 појединаца), као и осам Владиних сектора на највишем нивоу, направили су стратешки модел који је коришћен у циљу отварања Турске спољњем (међународном) тржишту. Стратешки приступ базирао се на промоцији гастрономије, моде, културе. У овом процесу евалуација је од огромног значаја. Тзв. „креативне индустрије“ играју велику улогу у брендирању нације. Неки сектори традиционално имају предност. Тако је филмска индустрија у последњих десет година много допринела бренду Турске у позитивном смислу, мада није увек било тако. Добар, али изузетно негативан пример је холивудски филм „Midnight Express“, који је 1978. године добио „Оскара“ за сценарио. Приказао је турску државу, али и целу турску націју у веома лошем светлу, приказујући свирепо поступање према затвореницима турских затвора. Креативност је оно што треба истаћи, јер без промоције креативности нема развоја ни брендинга. У томе много може да помогне јавни сектор и локалне администрације. Осим тога недостаје и адекватна законска регулатива адвертајзинга.

Хелен Лом, спољни сарадник WIPO-а и правни заступник за право интелектуалне својине, нагласила је да појам брендинга има пре свега маркетиншко значење. Стога се поставља питање зашто брендирати націју? Из разлога што треба стећи конкурентску предност на тржишту како би се побољшао извоз, привукле инвестиције, промовисао туризам, а бренд нације стекао економску предност. Пример Швајцарске – сама чињеница да је производ пореклом из Швајцарске додаје 25% вредности производа. Улога интелектуалне својине, пре свега жигова. На примеру Turkish Airlines – добра реклама која име покриће у искуству које се може осетити: пружа модерне услуге, духовита реклама, врло се везује за земљу порекла. Треба нагласити да успешан бренд постаје само онај који има потврду у искуству потрошача. Добри примери су и Excellent Hungarian Food Product, сертификациони жиг тела Владе Мађарске које испитује квалитет. Такође, Croatian Quality, Croatian Creation, које је регистровала Привредна Комора Хрватске, као и слоган Молдавије „First country, the wine”, где је земља порекла истакнута као кључни елемент у винској индустрији.

Бренд нације се гради тако што се држава најпре определи за квалитете које као нација поседује и у чију промоцију жели да уђе. То треба чинити искрено, определити шта представља ону особеност која чини одређену државу различитом у односу на друге, али не у негативном контексту, већ позитивном. Не може се градити бренд нације само на туризму. Заводи за интелектуалну својину углавном, не само у државама у транзицији, имају традиционалну улогу (регистрација права интелектуалне својине, услуге претраживања, испитивања новости…), без учешћа у економским стратегијама и планирањима. Географске ознаке се, изузев у винској индустрији, користе у ограниченом обиму. Недовољно се користе сертификациони и колективни жиг који производима и услугама на тржишту несумњиво додају вредност. Мадридски систем је још увек скуп, али са друге стране, не гледа се довољно дугорочно. Једном када се знак не региструје у иностранству и стога се изгуби, то може бити неповратно. Стварање модерног законског система, модерних Завода за интелектуалну својину, као и органа за спровођење закона, није једини циљ коме треба тежити – треба стећи конкурентску предност домаћих производа на међународном тржишту (културу интелектуалне својине, континуирано коришћење заштићених права). Лого није неопходан елемент за стварање бренда, али је згодан механизам за промоцију. Треба имати мултидисциплинаран приступ, на демократски начин и отворено чути разна мишљења. На пример, Мађарски Завод за интелектуалну својину је најпре стекао финансијску независност, а затим уз проширење надлежности био укључен у политику брендирања нације.

Рон Марчант, експерт у области интелектуалне својине и спољни сарадник WIPO-а, запитао се на крају да ли се може направити синергија између брендирања производа и услуга приватног сектора са брендом нације (имиџ који постоји или се жели направити)? Грузија и Јерменија су примери држава код којих дијаспора игра веома значајну улогу; иако живе у иностранству, значајно улажу у земљу порекла. Стварање имиџа је питање стварање слике коју желимо да други имају о нама, а не наша слика о нама самима. Нпр. Британци имају високо мишљење о себи, али их са друге стране, у Африци доживљавају као бивше колонијалисте. Такође, Британци имају добру слику о нпр. Турској захваљујући познатом ланцу турских ресторана. Такође, треба искористити међународне догађаје у земљи, као нпр. Првенство у фудбалу у Украјини – у очима јавности та земља биће у средишту светског интересовања. Улога интелектуалне својине: углавном, национални заводи за интелектуалну својину нису добродошли када је реч о крупним стратегијама, али заводи могу и треба да играју мање улоге, улогу експерта (нудити одговоре на питања, постављати се у улогу експерта), као и да буду битан фактор у спровођењу права. Треба донекле променити приступ и окренути се подносиоцима

пријава као према клијентима који заслужују брзу и квалитетну услугу (бити објективан али услужан). Оно што се региструје на међународном нивоу (намењено извозу) мора бити најбољег квалитета. Ништа брже не урушава углед као лоше искуство (нпр. Македонско вино се може наћи различитог квалитета, али када се тражи у иностранству, понуда мора бити од најбољег, мора бити врхунско, које би се везало за бренд те нације).

У другом делу Радионице, учесници су износили искуства сопствених земаља на пољу брендирања нације. Овде је наведен пример Мађарске која је учествовала у све три Радионице и била изузетно похваљена за своје активности на изградњи бренда нације.

Нова надлежност Завода за интелектуалну својину Мађарске од 01. јануара 2011. године: промовисање правилног коришћења инструмента за заштиту интелектуалне својине у циљу обликовања слике нације и креирања јединственог бренда као и унапређење препознатљивости типичних мађарских производа и заштите њихове репутације.

Дефиниција „Hungarica" јединствена је национална вредност, која се налази на листи Мађарског Националног Комитета. Који производ може носити знак Hungaricum: обухваћени су производи препознати и познати као типични за Мађарску како у самој Мађарској, тако и у иностранству. У састављању листе учествују локалне и регионалне администрације (листа локалних и регионалних вредности), поједина министарства, као и невладине организације. Савет за брендирање нације основан је одлуком Владе и он има пре свега саветодавну улогу: ту је да припрема предлоге за саветовање о националном бренду; учествује у креирању и одржавању националног бренда; даје иницијативе за научна истраживања која се односе на установљење јединственог бренда и логоа државе; да промовише Владине кампање које се односе на национални бренд и лого; да контактира и повезује се са сличним институцијама у другим земљама као и са домаћим научним установама.

Радионица је закључена договором да се презентације и реакције учесника шаљу WIPO-у наредне две недеље, а у року од шест недеља биће израђена коначна верзија овог Tool-а и објављена на сајту WIPO-а. У септембру ће бити прослеђен Упитник свим земљама које припадају овој дивизији да предоче планове за 2012. и 2013. годину на пољу брендирања нације.

У наставку је текст презентације којом је представник Србије, Мирјана Шарић представила рад државних органа и Завода за интелектуалну својину на пољу брендирања нације и доприносу подизања свести опште јавности о значају интелектуалне својине, као и креативности уопште.

**REPUBLIC OF SERBIA**

In the second half of the twentieth century, while Serbia was a part of the former Socialist Republic of Yugoslavia, it enjoyed very fine reputation all over the world. Yugoslav companies were very successful on the international market; tourism was very developed in the 60s and 70s of the twentieth century. After the war that happened on this territory, the prestige and good reputation has gone.

Today, as a nation, we have the difficult task, actually the most complicated task when speaking of the reputation of a country, to regain the international reputation of a peace loving and prosperous nation with tradition.

Talking about current situation, I will present the strategies and actions of the Republic of Serbia that have been passed with the ultimate aim of promoting the country. The primary one is the Government Strategy of Incitement and Development of Foreign Investment. This is an aspect of determination of the Government of Serbia to develop a plan for the promotion of investments, with the essential message that Serbia is undertaking steps to improve its investment potential, and to emphasize possibilities for business enterprises with foreign capital. For the sake of developing the marketing with the aim of establishing the favorable picture about Serbia, Government has founded the Serbia Investment and Export Promotion Agency (SIEPA). A campaign for the improvement of the image of Serbia aimed to reduce differences between the investors' image about Serbia and the image that the Government and the Agency tend to create for the investors in the future.

The most important initiative in this field is the project "Creating and Positioning a Nation Branding of Serbia" enforced by the ex Ministry of Trade and Services, now Ministry of Agriculture, Trade, Forestry and Water Management. In 2007, the Government has founded a Council for the Promotion of Serbia. It has been reactivated on several occasions with the same aim to propose measures, give expert opinions and proposals connected to the defining of strategic priorities for the promotion of Serbia. This mission succeeded

In the organization of Ministry of Trade and Services, the awards for the best goods and corporative brands **"The Best from Serbia"** have been awarded since 2004. The awards are given in 20 categories, and in the last two years, the award in the special category for the best personal brand in the function of the promotion of Serbia has been received by Novak Djokovic.

Also, for seven years in a row, Ministry of Trade and Services organizes "Brand Fair". The "Brand Fair" has strategically important position for the development

of branding in general. It became a generator of the knowledge on branding which is an important factor in the process of constructing the national brand of Serbia. The IP Office has been actively participating for the last four years by organizing seminars and approaching potential clients who may appear as applicants.

The initiative, so called "Brand Charter" started in 2007 by the Magazine BRAND, and signed by Chamber of Commerce of Serbia, Action Fund RS, Brand Fair and other relevant government institutions, business companies and well known Serbian artists. This initiative has the aim to create partnership between public and private sector in the field of the development of strategy of the national brand of Serbia. Its importance is reflected in the organized and opened media affirmation of all levels of society. This is a kind of general approach to the concept of the elaboration of the national brand.

As a contribution to this, I shall mention even an action of the Tourist Organization of Serbia for the sake of promoting Serbia as a place suitable for Congress Tourism. **Serbia Convention Bureau is** a mission to build an international convention industry that will benefit Serbia and the members of the Serbia Convention Bureau. The vision is for Serbia to become a highly successful, highly regarded convention destination in Europe. To bring the world business community to Serbia and to enhance Serbia's professional capacity by transfer of knowledge and technology.

For the sake of better using of the possibilities offered by the protection of geographical indications, which have not been greatly used by the parties in Serbia, we are in the course of realization of the Project of Technical Assistance of the Government of the Swiss Confederation to the Government of the Republic of Serbia in the field of the protection of the indications of geographical origin. The Project provides support in the certification of products protected by the indication of geographical origin. This is of essential importance for the marketing of home made products on the market of the EU. The intention of the state is to use the local government to assist in the realization of the legal protection of the indications of geographical origin for the products that are traditionally known and specific. In this campaign the IP Office has the active role, for the sake of motivation of the users of the registered geographical indications to protect their rights also at the international level. It also concerns the motivation of the local producers to accept certain obligations with regard to the maintenance of the quality of products, as well as for the financing of the realization of a suitable expert elaboration necessary for the acquiring of legal protection. As a result of this project, the geographical indication of origin Ajvar from Leskovac has been protected. We are in the course of the procedure for the grant for some other (Sjenički sudžuk – type of sausage from Sjenica, Sremski kulen - type of sausage from, and Zlatarski sir – cheese from Zlatar). One of the best known indications of geographical origin is The Honey from Homolje, protected by means of Lisbon Agreement. For the sake of promoting the product with the geographical indication, but also the regions themselves, the annual manifestations are regularly held that have cultural and tourist character and potential.

The promotion of the intellectual property, through the raising of public awareness and education is given as one of the targets of the Intellectual Property Development Strategy, which is about to be adopted by the Government. Strategy is a program document referring to the period from 2011 to 2015 and it consists from the vision of the national system of intellectual property until 2015 and a list of concrete measures which the Republic of Serbia should implement for the realization of that vision. Among others, the work on the raising of public awareness includes measures and actions directed to the general and expert public. Some of the activities include securing of the respect for intellectual property through the policy of public procurement on the part of the public sector (for example: prevent unauthorized use of copyright protected works and the use of the unlicensed software), more activities in order to secure more publicity to the World Day of Intellectual Property. The existence of the highly developed public awareness, as the form of prevention, is one of the most important factors in the struggle against the intellectual property infringement.

In the Intellectual Property Office, in the framework of the IPA project financed by the EC and managed by the EPO, the Education and Information Centre has been opened in January 2010, as the support to the raising of public awareness and education in the field of intellectual property. A Memorandum on Understanding has been signed with the National Agency for Regional Development, just like with almost all regional Chambers of Commerce and the Chamber of Commerce of Serbia. The activities of the Centre include the organization of seminars, the coordination of the network of the interested parties in the field of intellectual property, the providing of information, and in particular, the IP Diagnostic. At the request of the interested party, the experts of the Office analyze the existing and potential intellectual property, and afterwards they compose the written report with the estimation and recommendations with regard to the legal protection of those rights and possibilities of their economic utilization.

The promotion of the values and potential of the Serbian nation in this moment is a task involving a great number of government bodies, economic subjects and individuals. However, it seems that we miss a methodologically well equipped coordination of their

activities and the transformation into the synchronized action which could give the better result.

In the forthcoming period, as we are still waiting for The Council for promotion of Serbia to initiate action, we should direct all our strength in the informing the general public about the enormous importance of creativity. Serbia has made successes to be proud of. Young scientists from Serbia achieve important results at the prestigious world competitions (Serbia successfully participates the Laboratory of the famous, at the European Competition "Strawberry Team" who designed the first public solar charger for mobile phones and won the first place in the Week of Sustainable Development in Brussels, was awarded by The European, The Faculty of Organization Sciences was awarded the third price in New York at the world competition in making case studies, Group of young lawyers from Serbia won at the international competition from media law "Moot Court" At Oxford University). They all are the important part of the potential that should contribute to the creation of brand of modern Serbia.

# И З В Е Ш Т А Ј

## СА 22-е СЕДНИЦЕ WIPO КОМИТЕТА ЗА АУТОРСКО И СРОДНА ПРАВА
## Женева, Швајцарска, 15 - 24. јуни 2011. године

***Зорица Гулас,*** дипл.правник,
руководилац Групе за ауторско и сродна права

Главни задатак сталног Комитета за ауторско и сродна права (у даљем тексту: Комитет), је да развија међународни систем заштите ауторског и сродних права и хармонизује међународне норме и стандарде у овој области. Комитет је до сада одржао 21 редовну седницу. Тренутно, Комитет разматра следећа питања: заштита радиодифузних организација, заштита аудиовизуелних извођења и ограничења и изузеци ауторског и сродних права.

Двадесет другој седници Комитета, присуствовала је делегација наше земље коју су чинили: Мр Владимир Марић, помоћник директора за Сектор за ауторско и сродна права и међународну сарадњу у Заводу за интелектуалну својину и Зорица Гулас, руководилац Групе за ауторско и сродна права у Заводу за интелектуалну својину.

Пре почетка заседања, присутним делегатима земаља чланица кратко се обратио директор WIPO-а, Френсис Гари, нагласивши да је сада време да се конкретизује оно на чему је Комитет за ауторско и сродна права (у даљем тексту: Комитет), радио последњих десет година. Потом је позвао присутне делегате да се јаве за реч и изнесу своје предлоге за председавајућег Комитета као и његова два заменика. Представник Пакистана је за председавајућег предложио Manuel Guerra Zamarro, делегата из Мексика а за заменике делегата из Швајцарске, Александру Грациолу, и делегата из Кине. Како није било других предлога, а нико од присутних није имао ништа против, директор WIPO-а је позвао делагата из Мексика да преузме вођење седнице Комитета и захвалио се господину Јука Лиедесу из Финске на дугогогодишњем успешном вођењу Комитета.

Председавајући је позвао делегате земаља чланица да се изјасне да ли прихватају предложени дневни ред 22-е седнице Комитета. За реч се јавио представник делегације Индије и затражио да се у предложени дневни ред, као нова тачка 10 дневног реда уврсти и допринос Комитета имплементацији препорука из развојне агенде. Након делегата из Индије за реч се јавио представник Француске говорећи испред Групе Б, који је навео да Група Б предлаже мању измену предложене агенде тако да се у другој недељи заседања најпре расправља о тачки 9 предложеног дневног реда а затим о тачкама 8 па 7 предложеног дневног реда. Делегат Француске такође је изнео став Групе Б у коме потврђује спремност ове групе да прихвати предлог делагације Индије о увођењу нове тачке 10 у агенду Комитета. Седница Комитета је на кратко прекинута ради консулатација унутар регионалних група и неформалних консулатација координатора група након тога, како би се дошло до консензуса. Представници Завода су присуствовали заједничком састанку Групе Б и ЦЕБС групе, након чега су координатори ове две групе наставили консулатације са координаторима осталих група. Након дуже дебате и састанака регионалних група усвојен је измењени дневни ред двадесет и друге седнице Комитета, као и акредитације невладиних организација.

### Дневни ред заседања

1. отварање седнице;
2. избор председавајућег и два заменика председника;
3. усвајање дневног реда двадесет и друге седнице Комитета;
4. акредитације невладиних организација;
5. усвајање извештаја о раду двадесте и прве седнице Комитета;
6. ограничења и изузеци: особе које нису у могућности да читају штампане формате;
7. заштита аудиовизуелних извођача;
8. заштита радиодифузних организација;
9. ограничења и изузеци;
10. допринос Комитета имплементацији препорука из развојне агенде;
11. разно;
12. затварање седнице.

По усвајању дневног реда, представници регионалних група као и поједини делгати земаља чланица изнели су своје генералне изјаве а затим су на ред дошле и генералне изјаве невладиних организација. Занимљива је била изјава представника CSC (Civil Society Coalition), који је отворено и оштро критиковао поједине делегације земаља чланица због тога што, према његовим речима, намерно ометају доношење уговора о ограничењима ауторског права у корист слепих и слабовидих лица. Представник CSC је, завршавајући свој говор, именовао те земље набрајајући Француску, Швајцарску и Шпанију.

Другом дану заседања Комитета претходио је састанак на високом нивоу коме су присуствовали амбасодори земаља чланица. Том састанку присуствовао је и амбасадор Србије г. Угљеша

Зекић. Састанак је одржан ради неформалних консултација са земљама чланицама WIPO-а, о развојној политици WIPO спољних канцеларија. По завршеном састанку амбасадор Србије је замолио представнике Завода да директорки Завода доставе текст ноте која је дистрибуирана присутнима на састанку на високом нивоу, од стране WIPO-а. Након овог састанка Комитет је наставио рад и усвојио записник са претходне двадесет и прве седнице Комитета а затим је председавајући отворио расправу о шестој тачки дневног реда-ограничења и изузеци.

**Ограничења ауторског и сродних права и изузеци**

Пре почетка седнице на којој се расправљало о ограничењима и изузецима, свим делегатима је дистрибуиран документ који представља заједнички предлог Аргентине, Бразила, Еквадора, Европске Уније и њених чланица, Мексика, Парагваја и Америке, који је, како је објашњено од стране аутора тог текста, резултат неформалне дискусије између напред наведених земаља. Реч је о документу који представља консензус између напред наведених земаља које су на ранијим седницама Комитета доставили своје појединачне предлоге инструмента који би решили проблем ограничења ауторског права у случају приступа ауторским делима од стране слепих и слабовидих лица, као и других лица која нису у могућности да читају штампане формате. Како су наведене земаље, на претходним седницама Комитета доставили предлоге инструмента различите природе (делегација Бразила је, подсећања ради, доставила предлог обавезујућег инструмента, док је предлог Америке и предлог Европске уније био необавезујући документ у форми препоруке), то овај нови документ представља сагласност воља свих напред наведених земаља око саме суштине текста, док консензус није постигнут у вези са правном природом тог документа, односно нема сагласности око правне форме будућег инструмента.

Председавајући је позвао делегате земаља чланица да изнесу своје мишљењее поводом овог документа. За реч се најпре јавио представник делегације Јужне Африке испред групе афричких земаља, наводећи да није јасно шта треба да буде резултатат дискусије о овом документу, узимајући у обзир да се у достављеном документу у скоро свакој одредби појављују опционе речи као што су: може/мора или земље чланице/уговорне стране. Делегат из Јужне Африке напоменуо је да се афричке земље залажу за доношење обавезујућег инструмента, као и да афричке земље не желе да дискутују о документу који није радни документ, што није случај са документом који је дат на разматрање у оквиру ове тачке дневног реда. Затим се за реч јавио делгат Америке који је у име аутора текста, објаснио да је документ који је достављен свим делегатима резултат дискусије и заједничког рада Аргентине, Бразила, Еквадора, Европске Уније и њених чланица, Мексика, Парагваја и Америке које земље су на претходним седницама Комитета доставиле своје појединачне предлоге за решење проблема приступа ауторским делима од стране слепих и слабовидих лица. На овај начин, објаснио је делагат Америке, ове земље су желеле да убрзају рад Комитета по овом питању тако што би се у једном тексту нашле одредбе које решавају питање ограничења ауторског права у корист слепих и слабовидих лица а о којима постоји консензус између земаља које су аутори овог документа и то без обзира на то да ли ће на крају тај документ бити усвојен у форми обавезујућег или необавезујућег инструмента. Делегат Америке је објаснио и да је текст намерно сачињен уз употребу опционих израза као што су: може/мора или земље чланице/уговорне стране, како би сусштина дискусије о документу била сведена на конкретне примедбе на сам текст, не узимајућу у први мах, у обзир да ли ће сам документ на крају бити усвјен у форми препоруке или у форми међународног уговора. На тај начин, објаснио је делагат Америке, дошло би се до сагласности о суштини текста, па тек ако и када се око тога сложе сви делегати земаља чланица, онда на ред долази одлучивање о томе да ли ће тај текст бити обавезујући инструмент или заједничка препорука, односно необавезујући инструмент. Седница Комитета је затим прекинута ради консулатација унутар регионалних група и координатора свих регионалних група.

Након обављених консултација, у наставку рада Комитета о овој тачки дневног реда, председавајући је обавестио присутне делегате да је документ чији су аутори делегације Аргентине, Аустралије, Бразила, Еквадора, Европске Уније и њених чланица, Мексика, Парагваја и Америке, постао радни документ са ознаком 22/15 SCCR. За реч су се затим јавили делегати из Чилеа и Уругваја, Русије и Норвешке који су изјавили да подржавају предложени документ и да желе да буду коспонзори наведеног документа. Након тога прешло се на расправу о предложеном документу по члановима. Делегати су имали примедбе на чланове А, Б, Д и Г, а највећи број примедби и предлога за измене појединих ставова дошао је од стране делегације Јужне Африке. Јужна Африка је предложила и да се дода нови члан како би се нагласила обавезујућа природа тог документа. С обзиром на број примедби предложених од стране Јужне Африке као и одређених примедби које су изнеле делегације Швајцарске, Пакистана, Сенегала и Јапана, председавајући је предложио да се заседање Комитета по овој тачки дневног реда поново прекине и да се настави за два дана, колико времена је сасвим

довољно предлагачима документа да обаве неформалне консулатације са делегацијама оних земаља које су имале примедбе и питања у вези са предложеним документом.

У наставку седнице, по овом питању, предлагачи документа су образложили све измене које су начињене у самом документу, као резултат примедби и сугестија земаља чланица Комитета. Комитет је затим затражио од председавајућег да на основу вођене дискусије о овој тачки дневног реда, он припреми текст будућег међународног инструмента о ограничењима и изузецима ауторског права у корист слепих и слабовидих лица (документ број SCCR/22/16), који ће представљати основу за будући рад Комитета на наредној, двадесет и трећој седници Комитета.

Комитет се сложио да Генералној скупштини WIPO-а препоручи да чланови Комитета, на двадесет и трећој седници Комитета, наставе дискусију о документу председавајућег Комитета број SCCR/22/16 са циљем да се постигне споразум и да се финализује предлог међународног инструмента о ограничењима и изузецима ауторског права у корист слепих и слабовидих лица, као и других лица која нису у могућности да читају штампане формате.

**Међународна заштита аудиовизуелних извођења**

Пре почетка расправе о седмој тачки дневног реда представници Нигерије су поднели извештај о одржаним консултацијама у априлу 2011. године. Многобројне делегације су се захвалиле секретаријату на организацији отворених неформалних консултација у априлу 2011. године и изразиле жељу за убрзаним доношењем међународног уговора о заштити аудиовизелних извођача.

У расправи поводом ове тачке дневног реда председавајући је нагласио да су конкретне предлоге за поједине одредбе будућег међународног уговора о заштити аудиовизуелних извођења поднеле делегације Индије, Америке и Мексика. Велики број делегација сматрао је да 19 чланова око којих је постигнута сагласност на дипломатској конференцији 2000 године не треба поново отварати. Међутим, питање одредбе која би регулисала преноса права је питање које је од почетка било спорно између земаља чланица. Наиме, досадашњи предлог текста одредбе будућег Уговора која решава пренос права, показао се као проблематичан за неке од држава чланица и отворио је бројна политичка питања, као и питања међународног уговорног права.

У току расправе по овој тачки дневног реда, земље чланице Комитета су показале већу флексибилност и отвореност у циљу постизања међународног инструмента за заштиту аудиовизелних извођача. Тако да је на двадесет и другом заседању Комитета, управо због показане флексибилности и отворености делегата из земаља чланица и дошло до консензуса у вези са чланом 12. будућег међународног уговора о заштити права аудиовизуелних извођача који регулише пренос права са интерпретатора на филмског продуцента.

Комитет је усвојио комбиновани предлог члана 12 који решава пренос права за потребе предлога WIPO Уговора о заштити аудиовизуелних извођења који гласи:

Члан 12.

Пренос права

Страна уговорница може да предвиди у свом националном закону да када интерпретатор да свој пристанак да се његова интерпретација сними/забележи на носачу звука и слике (аудиовизелно снимање), ексклузивна права предвиђена у члановима 7-11. овог Уговора припадају или их остварује произвођач тог аудиовизуелног снимка или се преносе на проивођача тог аудиовизуелног снимка, осим ако уговором између интерпретатора и произвођача аудиовизуелног снимка није предвиђено другачије, у складу са националним законодавством.

Страна уговорница може да захтева у вези са аудиовизуелним снимком произведеним на основу националног закона, да такав пристанак или уговор буде у писаној форми и потписан од стране обе уговорне стране или њихових овлашћених заступника.

Независно од преноса искључивих права, као што је горе описано, национални закони или појединачни, колективни или други споразуми могу да обезбеде интерпретатору право на ауторски хонорар или правичну накнаду за било какво коришћење интерпретације, као што је прописано овим уговором, укључујући и чланове 10. и 11. овог Уговора.

У оквиру закључака по овој тачки дневног реда утврђено је да се Комитет сложио да би земље чланице Комитета требало да препоруче генералној Скупштини WIPO-а да генерална Скупштина обнови суспендовану Дипломатску конференцију из 2000, са разумевањем да текст Уговора треба да садржи а) 19 чланова уговора који су привремено усвојени укључујући и постојећу договорену изјаву; б) нови члан 12. Уговора око којег је постигнута сагласност на двадесет и другој седници Комитета; и ц) са три додатне договорене изјаве које тек треба да буду пропремљене у вези са чл. 1, 2. и 15. а које би требало да реше специфичне забринутости појединих држава чланица Комитета.

Три договорене, заједничке изјаве које тек треба да буду припремљене, имају за циљ да потврде посвећеност држава чланица, начелима, циљевима и политици конкуренције из ТРИПС споразума, затим да се разјасни однос између WIPO Уговора о заштити интерпретатора и произвођача фонограма и овог Уговора, да се боље опишу они интерпретатори који су заштићени Уговором и да се боље разјасни однос између чл. 13. и 15. Уговора.

Комитет се такође сложио да се у преамбулу Уговора унесе још једна клаузула у којој ће бити препознат значај развојне агенде. Земље чланице су се обавезале да у предстојећем периоду дискутују и да се консултују о предстојећем тексту договорених изјава и додатне клаузуле у преамбули Уговора. Такође је усаглашено да се текст договорених изјава и текст нове клаузуле у преамбули поднесу најраније шест месеци, односно најкасније месец дана пре поновог отварања Дипломатске конференције.

**Заштита радиодифузних организација**

У току расправе о овој тачки дневног реда, многобројне делегације су иразиле захвалност секретаријату на организацији отворених неформалних консултација у априлу 2011. године и изразиле жељу за убрзаним доношењем међународног уговора о заштити радиодифузних организација као и радни план за доношење овог међународног уговора. Пре почетка расправе о заштити радиодифузних организација, председавајући је нагласио да су до сада, предлоге Нацрта међународног уговора о заштити радиодифузних организација поднели Јапан, Канада, Јужна Африка, као и предлог председавајућег неформалних консулатација које су одржане у Женеви у априлу 2011 године, и ревизија Нацрта основног предлога међународног уговора са петнаесте седнице Комитета. Делегација јужне Африке је у току седнице образложила свој предлог радног плана у вези са заштитом радиодифузних организација и предложила да Комитет настави дискусију о Нацрту међународног уговора о заштити радиодифузних организација на бази сигнал приступа у традиционалном смислу речи, као и да се Комитет фокусира на решавање овог питања тако што ће се о овом важном питању дискутовати на неформалним отвореним консулатацијама које би требало да непосредно претходе наредној двадесет и трећој седници Комитета са циљем да се 2012 генералној Скупштини WIPO-а учини препорука о Нацрту уговора.

У оквиру закључака по овој тачки дневног реда Комитет је потврдио своју посвећеност наставку рада на тексту међународног уговора о заштити радиодифузних организација на бази сигнал приступа у традиционалном смислу речи и одобрио план рада предложен у документу председавајућег. Планом рада је предвиђено да се организују дводневне отворене консултације у Женеви с тим да ће конкретан датум одржавања консултација бити накнадно одређен од стране секретаријата WIPO-а. Сврха тих консултација је напредак у раду на тексту Нацрта међународног уговора, са циљем да се Скупштини WIPO-а у 2012. години учини препорука о могућем заказивању Дипломатске конференције.

**Допринос Комитета спровођењу препорука из развојне агенде**

У оквиру ове тачке дневног реда председавајући је изјавио да ће све изјаве у вези са доприносом Комитета спровођењу препорука из развојне агенде бити забележене у извештају са двадесет и друге седнице Комитета, као и да ће бити прослеђене Генералној Скупштини WIPO-а.

Сви документи који су разматрани на двадесет и другој седници Комитета као и закључци са двадесет и другог заседања Комитета доступни су on-line на званичном сајту WIPO-а.[1]

[1] http://www.wipo.int/meetings/en/details.jsp?meeting_id=22169

# Упутство за писање прилога за "Подлистак "

Ради једнообразности и лакше обраде, молимо да прилози за *Гласник интелектуалне својине* имају следећу форму:

- текстови морају бити куцани или штампани на белој банкпост хартији, са једне стране, са 27-30 редова на једној страни и маргинама које обезбеђују 60 словних места у једном реду;

- уз то, потребно је слати дигитални запис текста на дискети од 3 ½ инча, CD (compact discu) или ел. поштом на e-mail: iuzelac@zis.gov.rs уз коришћење True Type unicode фонтова пожељно Times New Roman, из разлога компатибилности са другим корисницима и што оперативни систем на коме се ради у Заводу има инсталирану подршку за такве карактере;

- сваки рад мора бити потписан (име, презиме, адреса и број телефона аутора, стручна и/или научна титула, функција на послу и место запослења);

- напомене (фусноте) се прилажу на крају рада (како на примеру, тако и на дигиталном запису), означене бројевима од 1 па надаље, кроз цео рад;

- приликом цитирања књига, неопходно је придржавати се следећег редоследа података: презиме и име аутора, назив књиге, место издавања, година издавања, редни број тома, број странице и евентуално број тачке или пасуса;

- приликом цитирања радова из часописа и других периодичних публикација, неопходно је придржавати се следећег редоследа података: презиме и име аутора, назив рада, назив часописа или публикације, број часописа или публикације, година излажења, број странице;

- приликом цитирања управних и судских одлука поред службених ознака и датума доношења навести и извор у којем је одлука објављена;

- уколико се једно дело истог аутора цитира у више напомена (фуснота) које нису непосредно једна иза друге после презимена и имена аутора, други и сваки наредни пут може се употребити скраћеница op.cit. Уколико се једно дело истог аутора цитира напоменама које следе непосредно једна за другом, после првог навођења потпуних података о аутору и делу може се употребити скраћеница ibid.

Радови који не одговарају овим стандардима неће моћи бити објављени без дораде, па је зато важно да се аутори већ при писању прилога за *Гласник интелектуалне својине* придржавају ових упутстава.

**ГЛАСНИК ИНТЕЛЕКТУАЛНЕ СВОЈИНЕ 2011/4**

Издавач:
ЗАВОД ЗА ИНТЕЛЕКТУАЛНУ СВОЈИНУ РЕПУБЛИКЕ СРБИЈЕ
Улица Кнегиње Љубице 5, 11102 Београд, Србија

Главни и одговорни уредник: Бранка Тотић

Уредник: Илија Узелац

Уредник подлистка: Данијела Стефанов

Уређивачки одбор: мр Бранка Билен – Катић,
Мирјана Јелић, мр Мирела Бошковић, мр Владимир Марић
Зорана Зрнић,Јасминка Рељин,Јелена Лопушина
Технички уредник и коректор: Гордана Ђорђевић

Уредништво:
Завод за интелектуалну својину, Кнегиње Љубице 5,
11102 Београд, Република Србија
Тел: 011/20-25-965 (уредник)
факс: 011/311-23-77
E-mail: iuzelac@zis.gov.rs

Гласник интелектуалне својине је двомесечник.

Штампа:
Завод за интелектуалну својину

Тираж: 200 примерака
ГЛАСНИК ИНТЕЛЕКТУАЛНЕ СВОЈИНЕ је
службено гласило Завода за интелектуалну
својину Републике Србије

*Ово издање на компакт диску уредио и урадио:*
*Светозар Јовићевић дипл. инг.ел.*
*Тел:+381(0)11 20 25 824*
*E-mail: sjovicevic@zis.gov.rs*

CIP – Каталогизација у публикацији
Народна библиотека Србије, Београд
347.78
**Гласник интелектуалне својине**
[ Електронски извор] = Intellectual property journal / главни и одговорни уредник Бранка Тотић ; уредник Светозар Јовићевић. - CD-ROM изд . - Електронски часопис. - Год. 84, бр. 4 (2005)- .- Београд (Кнегиње Љубице 5) : Завод за интелектуалну својину, 2005-. -CD-ROM ; 12цм
Двомесечно, - Има и штампано издање: Гласник интелектуалне својине = ISSN 0354-771X
ISSN 1452-2144 = Гласник интелектуалне својине (CD-ROM )
COBIS S.SR-ID 125436172

ISSN 1452-2144
9 771452 214000