РЕПУБЛИКА СРБИЈА
ЗАВОД ЗА ИНТЕЛЕКТУАЛНУ СВОЈИНУ

REPUBLIC OF SERBIA
INTELLECTUAL PROPERTY OFFICE

ГЛАСНИК ИНТЕЛЕКТУАЛНЕ СВОЈИНЕ
INTELLECTUAL PROPERTY GAZETTE

Београд / Belgrade 2011/3

ISSN 1452 - 2144

Завод за интелектуалну својину Републике Србије | The Intellectual Property Office of the Republic of Serbia

ГЛАСНИК ИНТЕЛЕКТУАЛНЕ СВОЈИНЕ

INTELLECTUAL PROPERTY GAZETTE

ГЛАСНИК ИНТЕЛЕКТУАЛНЕ СВОЈИНЕ Тираж: 200	**Година излажења XCI**	**2011**	**Број 3**	P 51504 - 51560 1193 - 1197 U Ж 62301 - 62500 Д 10680 - 10693	**Датум објављивања: 2011-06-30 Београд**

Издаје и штампа: **Завод за интелектуалну својину,** Београд, Кнегиње Љубице 5, Београд, Србија
Телефони:011 20 25 800 (централа); факс: 011 311 23 77

E-mail: zis@zis.gov.rs
www.zis.gov.rs

САДРЖАЈ

1. ПАТЕНТИ 1520
1.1. ОБЈАВА ПРИЈАВА ПАТЕНАТА 1521
1.1.1. Индексне табеле пријава патената 1541
1.2. ОБЈАВА ПАТЕНАТА..... 1555
1.2.1. Индексне табеле патената..... 1591
1.2.2.Престанак важности регистрованих патената. 1601
1.3. ОБЈАВА МАЛИХ ПАТЕНАТА 1603
1.3.1. Индексне табеле малих патената 1605
1.3.2 Престанак важности регистрованих малих патената..... 1607
1.4. ЗАХТЕВИ ЗА ПРОШИРЕЊЕ ЕВРОПСКИХ ПРИЈАВА ПАТЕНАТА..... 1609
1.4.1. Међународни кодови за идентификацију библиографских података патената према – **WIPO ST. 9**..... 1610
1.4.2. Објава захтева за проширење европских пријава патената. 1611
1.4.2.1. Индекси захтева за проширење европских пријава патената - бројеви, подносиоци и класификационе ознаке... 1778
1.4.3. Објава повучених захтева за проширење европских пријава патената..... 1976
1.4.3.1. Индекси повучених захтева за проширење европских пријава патената - бројеви, подносиоци и класификационе ознаке..... 2039
2. ЖИГОВИ..... 2107
2.1. ОБЈАВА ЖИГОВА..... 2108
2.1.1. Индексне табеле регистрованих жигова..... 2154
2.1.1.1. Објава уписаних промена регистрованих жигова од 2011-04-06 до 2011-06-05 године 2164
2.1.2. Објава инф. о међународно рег. жиговима за којеје затражено признање у Републици Србији..... 2187
3. ИНДУСТРИЈСКИ ДИЗАЈН..... 2225
3.1. Објава регистрованог индустријског дизајна 2226
3.1.1. Индексне табеле индустријског дизајна..... 2231
3.1.1.1 Објава уписаних промена регистрованог дизајна од 2011-04-06 до 2011-06-05 2234
4. ПОДЛИСТАК.....2235-2243

CONTENTS

1. PATENTS.....1520
1.1. Publication of Patent Applications 1521
1.1.1. Patent Applications Indexes.....1541
1.2. Publication of Patents 1555
1.2.1. Patents Indexes 1591
1.2.2. Termination of validity of Registred Patents.....1601
1.3. Publication of Petty Patents.....1603
1.3.1. Petty Patents Indexes 1605
1.3.2. Termination of validity of Registred Petty Patents.....1607
1.4. Request for the Extension of the effects of European Patent Applications.....1609
1.4.1. Recommendation concerning Bibliographic Data on and relating to Patents - WIPO ST. 9 1610
1.4.2. Publication of Request for Extension to European Patent Applications.....1611
1.4.2.1. Indexes of Request for the Extension of the effects of European Publication of withdrawn applications for the Ehtension of the effects of European Patent Applications 1778
1.4.3. Indexes of withdrawn applications for the Extension of the effects of European Patent Applications – Numbers and Applicants Patent Applications.....1976
1.4.3.1. Indexes of withdrawn applications for the Extension of the effects of European Patent Applications – Numbers, Applicants and Clasification Symbols.....2039
2. TRADEMARKS 2107
2.1. Publication of Trademarks 2108
2.1.1. Trademark Indexes 2154
2.1.1.1. Publications of Entered Changes of Registered Trademarks from April 6th, 2011 to June 5th, 2011 2164
2.1.2.Publication of Information on International Registrations of Marks for which Protection has been requestedin the Republic of Serbia.....2187
3. INDUSTRIAL DESIGNS 2225
3.1. Publication of Industrial Designs.....2226
3.1.1. Industrial Design Indexes 2231
3.1.1.1. Publications of Entered Changes of Registered Desion from April 6th, 2011 to June 5th, 2011 2234
4. SUPPLEMENT.....2235-2243

КОДОВИ ЗЕМАЉА (WIPO standard ST.3)

AD Андора
AE Уједињени Арапски емирати
AF Авганистан
AG Антигва и Барбуда
AI Ангила
AL Албанија
AM Јерменија
AN Холандски Антили
AO Ангола
AR Аргентина
AT Аустрија
AU Аустралија
AW Аруба
AZ Азербејџан
BA Босна и Херцеговина
BB Барбадос
BD Бангладеш
BE Белгија
BF Горња Волта
BG Бугарска
BH Бахреин
BI Бурунди
BJ Бенин
BM Бермуди
BN Брунеј Даресалам
BO Боливија
BR Бразил
BS Бахами
BT Бутан
BV Буве Острва
BW Боцвана
БУ Белорусија
BZ Белизе
CA Канада
CD ДР Конго
CF Централноафричка Република
CG Конго
CH Швајцарска
CI Обала Слоноваче
CK Кук Острва
CL Чиле
CM Камерун
CN Кина
CO Колумбија
CR Костарика
CU Куба
CV Зеленортска Острва
CY Кипар
CZ Чешка Република
DE Немачка
DJ Џибути
DK Данска
DM Доминика
DO Доминиканска Република
DZ Алжир
EC Еквадор
EE Естонија
EG Египат
EH Западна Сахара
ER Еритреја
ES Шпанија
ET Етиопија
FI Финска
FJ Фиџи
FK Фокландска Острва
FO Фарска Острва
FR Француска
GA Габон
GB Велика Британија
GD Гренада
GE Грузија
GH Гана
GI Гибралтар
GL Гренланд
GM Гамбија
GN Гвинеја
GQ Екваторијална Гвинеја
GR Грчка
GS Јужна Џорџија и Јужна Сендвичка Острва
GT Гватемала
GW Гвинеја-Бисау
GY Гвајана
HK Хонг Конг
HN Хондурас
HR Хрватска
HT Хаити
HU Мађарска
ID Индонезија
IE Ирска
IL Израел
IN Индија
IQ Ирак
IR Иран
IS Исланд
IT Италија
JM Јамајка
JO Јордан
JP Јапан
KE Кенија
KG Киргизија
KH Камбоџа
KI Кирибати
KM Коморска Острва
KN Сент Киц и Невис
KP ДНР Кореја
KR Република Кореја
KW Кувајт
KY Кајманска Острва
KZ Казахстан
LA Лаос
LB Либан
LC Сент Лусија
LI Лихтенштајн
LK Шри Ланка
LR Либерија
LS Лесото
LT Литванија
LU Луксембург
LV Летонија
LY Либија
MA Мароко
MC Монако
ME Црна Гора
MD Молдавија
MG Мадагаскар
MK Македонија
ML Мали
MM Мијанмар
MN Монголија
MO Макао
MP Северна Маријанска Острва
MR Мауританија
MS Монтсерат
MT Малта
MU Маурицијус
MV Малдиви
MW Малави
MX Мексико
MY Малезија
MZ Мозамбик
NA Намибија
NE Нигер
NG Нигерија
NI Никарагва
NL Холандија
NO Норвешка
NP Непал
NR Науру
NZ Нови Зеланд
OM Оман
PA Панама
PE Перу
PG Папуа Нова Гвинеја
PH Филипини
PK Пакистан
PL Пољска
PT Португалија
PW Палау Острва
PY Парагвај
QA Катар
RS Србија
RO Румунија
RU Руска Федерација
RW Руанда
SA Саудијска Арабија
SB Соломонска Острва
SC Сејшели
SD Судан
SE Шведска
SG Сингапур
SH Света Јелена
SI Словенија
SK Словачка
SL Сиера Леоне
SM Сан Марино
SN Сенегал
SO Сомалија
SR Суринам
ST Сао Томе и Принсипе
SV Салвадор
SY Сирија
SZ Свазиленд
TC Турска и Каикоска Острва
TD Чад
TG Того
TH Тајланд
TJ Тајикистан
TM Туркменистан
TN Тунис
TO Тонга
TP Источни Тимор
TR Турска
TT Тринидад и Тобаго
TV Тувалу
TW Тајван
TZ Танзанија
UA Украјина
UG Уганда
US САД
UY Уругвај
UZ Узбекистан
VA Ватикан
VC Сент Винсент и Гренадини
VE Венецуела
VG Британска Девичанска Острва
VN Вијетнам
VU Вануату
WS Самоа
YE Јемен
ZA Јужноафричка Република
ZM Замбија
ZW **Зимбабве**

Кодови међународних организација

WO Светска организација за интелектуалну својину (WIPO)
IB Међународни биро (у својству пријемног бироа за PCT)
EP Европски патентни биро (EPO)
BX Биро Бенелукса за жигове и моделе
EA Евроазијска патентна организација (EAPO)
OA Афричка организација за интелектуалну својину (OAPI)
AP Афричка регионална организација за индустријску својину (ARIPO)
GC Патентни завод Савета за сарадњу арапских земаља у Заливу (GCG)

Патенти / Patents

Међународни кодови за идентификацију библиографских података о патентима - WIPO - ST. 9

Recommendation concerning bibliographic data on and relating to patents - WIPO - ST. 9

Број документа	**(11)**	Number of document
Врста документа	**(13)**	Kind of document
Број пријаве	**(21)**	Number assigned to the application
Датум подношења пријаве	**(22)**	Filing date of the application
Други датуми, датум излагања на међународној изложби	**(23)**	Other dates, date of exhibiting at the intrnational exibition
Подаци о праву првенства	**(30)**	Priority data
Датум објављивања пријаве	**(43)**	Publication date of the unexamined application
Датум објављивања патента	**(45)**	Publication date of registered patent
Међународна класификација патената	**(51)**	International Patent Classification code
Назив проналаска	**(54)**	Title of invention
Апстракт или патентни захтев	**(57)**	Abstract or patent claim
Број основне пријаве (или патента) за који се подноси допунска пријава	**(61)**	Number of the earlier application (or patent) to which the present document is an addition
Број првобитне пријаве из које је пријава издвојена	**(62)**	Number of the earlier application from which the present document has been divided out
Име подносиоца пријаве	**(71)**	Name of the applicant
Име проналазача	**(72)**	Name of the inventor
Име носиоца патента	**(73)**	Name of the owner of patent
Име пуномоћника	**(74)**	Name of the representative
Број и датум подношења међународне пријаве	**(86)**	Number and filing date of the international application
Број и датум међународне објаве	**(87)**	Number and date of the publication of the interational application
Датум и број пријаве европског патента	**(96)**	Date and number of the European patent application
Датум и број објаве признатог европског патента	**(97)**	Date and number of publication of the granted European patent

ВРСТЕ ДОКУМЕНАТА
TYPES OF DOCUMENTS

Објава пријава патената	**A**	Publication of patent applications
Регистровани патенти	**B**	Registered patents
Мали патенти	**U**	Petty patents

ОБЈАВА ПРИЈАВА ПАТЕНАТА

PUBLICATION OF PATENT APPLICATIONS

(51) ***A 01 C 23/02*** (2006.01) **(11) 2010/0576**
A 01 G 29/00 (2006.01) **(13) A**
(21) P-2010/0576 (22) 30.12.2010.
(54) UREĐAJ U OBLIKU CEVI ISPUNJENE TEČNIM SREDSTVOM ZA ISHRANU I/ILI ZAŠTITU BILJA, POSTUPAK DOBIJANJA UREĐAJA I NJEGOVA UPOTREBA
(71) KOSTIĆ, Marko, Ljubinke Bobić 1/4, 11077 Novi Beograd, RS
(72) KOSTIĆ, Marko, Ljubinke Bobić 1/4, 11077 Novi Beograd, RS
(57) Pronalazak je vezan za uređaj, postupak proizvodnje uređaja i korišćenje uređaja u obliku cevi (1) ispunjene tečnim sredstvom (6) za ishranu i/ili zaštitu bilja koji se ubacuje u supstrat (8), najbolje blizu osnove biljke, gde dolazi do pražnjenja. Novost se ogleda u načinu formiranja i uklanjanja zatvarača koji se sada dobijaju zagrevanjem voska, smole, gume, plastike, hotmelt lepkova i jedinjenja njima sličnih karakteristika, nakon čega prelaze u tečnu masu u koju se urone otvori cevi, čime se nanosi film koji nakon očvršćavanja formira opnu (3a, 3b), a koja usled pritiska na bočne strane cevi (1) na mestu njenog nastanka puca, za razliku od klasičnih zatvarača koji komplikuju proizvodnju i upotrebu i ostavljaju otpad nakon upotrebe. Ukoliko su u pitanju sredstva koja će formirati elastičnu opnu, njeno uklanjanje se vrši pre svlačenjem, nego lomljenjem, ili probijanjem (direktnim pritiskom).

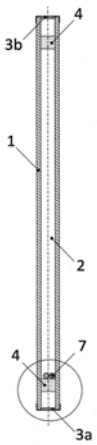

(54) DEVICE IN THE FORM OF TUBE FILLED WITH LIQUID AGENT FOR PLANT FEEDING AND/OR PROTECTION, PROCESS OF OBTAINING DEVICE AND ITS USE

(57) Invention herewith described refers to the manufacturing process and the use of the device in the form of a tube (1) filled with a liquid agent (6) for plant feeding and/or protection that are injected into the substrate (8), preferably near the plant base, where there is a discharge. The novelty is reflected in the way of the formation and removal of the shutters, which are nowadays obtained by heating wax, resin, rubber, plastics, hot melt adhesives and compounds with similar characteristics in order to convert them into a liquid mass in which are immersed the pipe openings, whereby there is applied the film that after the solidification forms the membrane (3a, 3b), which because of the pressure applied on the sides of the pipe (1) ruptures at the place of its creation, unlike the classical closures that make the production and use complicate, and leave waste after use. When it comes to agents that will form the elastic membrane, its removal is done prior by divestment, than by breaking or perforation (by direct pressure).

(51) ***A 01 N 41/10*** (2006.01) **(11) 2011/0061**
A 01 N 43/653 (2006.01) **(13) A**
A 01 N 43/90 (2006.01)
A 01 N 25/32 (2006.01)
A 01 P 13/02 (2006.01)
(21) P-2011/0061 (22) 25.11.2002.
(62) P-447/04
(30) DE 07.12.2001. 10160139.5
(54) SINERGISTIČKA HERBICIDNA SREDSTVA
(71) BAYER CROPSCIENCE AG, Alfred-Nobel-Str. 50, 49790 Monheim am Rhein, DE
(72) HACKER, Erwin, Margarethenstrasse 16, 65239 Hocheim, DE; BIERINGER, Hermann, Eichenweg 26, 65817 Eppstein, DE; KRÄHMER, Hansjörg, Kantstrasse 20, 65719 Hofheim, DE
(74) RASULIĆ, Bojana, Svetogorska 4, 11000 Beograd, RS
(57) Opisuju se hebicidna sredstva koja sadrže
A) 2-[2-hlor-3-(2,2,2- trifluoretoksimetil)-4-metilsulfonil-benzoil]cikslohеksan-1,3-dion i
B) najmanje jedno jedinjenje iz grupe flutiacet-metil i carfentrazon-etil protiv monokotilnih i/ili dikotilnih štetnih biljaka. Ova sredstva imaju bolje delovanje u odnosu na pojedinačno primenjene herbicice.

(54) SINERGISTIC HERBICIDAL AGENTS

(57) Invention herewith described refers to the herbicidal agent containing: A) 2-[2-chloro-3-(2,2,2 -trifluorotoxymethyl)-4-methyl-sulphonyl-benzoyl] cyclohexane-1,3-dione
B) and at least one compound from fluthiacet-methyl group and carfentrazone-ethyll effective against monocotyledonous and/or dycotyledonous pathogenic plants. These agents have a better effect than the individually applied herbicides.

(51) ***A 01 N 41/10*** (2006.01) **(11) 2011/0062**
A 01 N 43/56 (2006.01) **(13) A**
A 01 N 43/80 (2006.01)
A 01 N 25/32 (2006.01)
A 01 P 13/02 (2006.01)
(21) P-2011/0062 (22) 25.11.2002.
(62) P-447/04
(30) DE 07.12.2001. 10160139.5
(54) SINERGISTIČKA HERBICIDNA SREDSTVA
(71) BAYER CROPSCIENCE AG, Alfred-Nobel-Str. 50, 49790 Monheim am Rhein, DE
(72) HACKER, Erwin, Margarethenstrasse 16, 65239 Hocheim, DE; BIERINGER, Hermann, Eichenweg 26, 65817 Eppstein, DE; KRÄHMER, Hansjörg, Kantstrasse 20, 65719 Hofheim, DE
(74) RASULIĆ, Bojana, Svetogorska 4, 11000 Beograd, RS
(57) Opisuju se hebicidna sredstva koja sadrže
A) 2-[2-hlor-3-(2,2,2- trifluoretoksimetil)-4-metilsulfonil-benzoil]ciksloheksan-1,3-dion i
B) najmanje jedno jedinjenje iz grupe isoksaflutola, mesotriona, sulcotriona, 4-(4-Trifluormetil-2-metilsulfonilbenzoil)-5-hidroksi-l-metil-3-metilpirazola, protiv monokotilnih i/ili dikotilnih štetnih biljaka. Ova sredstva imaju bolje delovanje u odnosu na pojedinačno primenjene herbicice.

(54) SINERGISTIC HERBICIDAL AGENTS

(57) Invention herewith described refers to the herbicidal agent containing:
A)2-[2-chloro-3-(2,2,2 -trifluorotoxymethyl)-4-methyl-sulphonyl-benzoyl] cyclohexane-1,3-dione and
B)at least one compound from the group of isoxaflutole, mesotrione, sulcotrione, 4 - (4-trifluoromethyl-2-methyl-sulphonyl-benzoyl)-5-hydroxy-1-methyl-3-methylpyrazole, effective against monocotyledonous and/or dycotyledonous pathogenic plants. These agents have a better effect than the individually applied herbicides.

---

(51) ***A 01 N 41/10*** (2006.01) **(11) 2011/0063**
A 01 N 57/20 (2006.01) **(13) A**
A 01 N 25/32 (2006.01)
A 01 P 13/02 (2006.01)
(21) P-2011/0063 (22) 25.11.2002.
(62) P-447/04
(30) DE 07.12.2001. 10160139.5
(54) SINERGISTIČKA HERBICIDNA SREDSTVA
(71) BAYER CROPSCIENCE AG, Alfred-Nobel-Str. 50, 49790 Monheim am Rhein, DE
(72) HACKER, Erwin, Margarethenstrasse 16, 65239 Hocheim, DE; BIERINGER, Hermann, Eichenweg 26, 65817 Eppstein, DE; KRÄHMER, Hansjörg, Kantstrasse 20, 65719 Hofheim, DE
(74) RASULIĆ, Bojana, Svetogorska 4, 11000 Beograd, RS
(57) Opisuju se hebicidno sredstvo koja sadrži
A) 2-[-chlor-3(2,2,2- trifluoretoksimetil)-4-metilsulfonil-benzoil]ciksloheksan-1,3-dion i
B) glifosat protiv monokotilnih i/ili dikotilnih štetnih biljaka. Ova sredstva imaju bolje delovanje u odnosu na pojedinačno priraenjene herbicice.

(54) SINERGISTIC HERBICIDAL AGENTS

(57) Invention herewith described refers to the herbicidal agent containing:
A) 2 - [3-chloro-(2,2,2 -trifluorotoxymethyl)-4-methyl-sulphonyl-benzoyl] cyclohexane-1,3-dione and
B) glyphosate effective against monocotyledonous and/or dycotyledonous pathogenic plants. These agents have a better effect than the individually applied herbicides.

---

(51) ***A 01 N 41/10*** (2006.01) **(11) 2011/0064**
A 01 N 47/36 (2006.01) **(13) A**
A 01 N 25/32 (2006.01)
A 01 P 13/02 (2006.01)
(21) P-2011/0064 (22) 25.11.2002.
(62) P-447/04
(30) DE 07.12.2001. 10160139.5
(54) SINERGISTIČKA HERBICIDNA SREDSTVA
(71) BAYER CROPSCIENCE AG, Alfred-Nobel-Str. 50, 49790 Monheim am Rhein, DE
(72) HACKER, Erwin, Margarethenstrasse 16, 65239 Hocheim, DE; BIERINGER, Hermann, Eichenweg 26, 65817 Eppstein, DE; KRÄHMER, Hansjörg, Kantstrasse 20, 65719 Hofheim, DE
(74) RASULIĆ, Bojana, Svetogorska 4, 11000 Beograd, RS
(57) Opisuju se hebicidno sredstvo koja sadrži
A) 2-[-chlor-3(2,2,2- trifluoretoksimetil)-4-metilsulfonil-benzoil]ciksloheksan-1,3-dion i
B) rimsulfuron protiv monokotilnih i/ili dikotilnih štetnih biljaka. Ova sredstva imaju bolje delovanje u odnosu na pojedinačno prirnenjene herbicice.

(54) SINERGISTIC HERBICIDAL AGENTS

(57) Invention herewith described refers to the herbicidal agent containing:
A) 2 - [chlor-3-(2, 2, 2 - trifluorotoxymethyl)-4-methyl-sulphonyl-benzoyl] cyclohexane-1,3-dione and
B) rimsulfuron effective against monocotyledonous and/or dycotyledonous pathogenic plants. These agents have a better effect than the individually applied herbicides.

---

(51) ***A 01 N 41/10*** (2006.01) **(11) 2011/0065**
A 01 N 47/36 (2006.01) **(13) A**
A 01 N 25/32 (2006.01)
A 01 P 13/02 (2006.01)
(21) P-2011/0065 (22) 25.11.2002.
(62) P-447/04
(30) DE 07.12.2001. 10160139.5
(54) SINERGISTIČKA HERBICIDNA SREDSTVA

(71) BAYER CROPSCIENCE AG, Alfred-Nobel-Str. 50, 49790 Monheim am Rhein, DE
(72) HACKER, Erwin, Margarethenstrasse 16, 65239 Hocheim, DE; BIERINGER, Hermann, Eichenweg 26, 65817 Eppstein, DE; KRÄHMER, Hansjörg, Kantstrasse 20, 65719 Hofheim, DE
(74) RASULIĆ, Bojana, Svetogorska 4, 11000 Beograd, RS
(57) Opisuju se hebicidno sredstvo koja sadrži
A) 2-[-chlor-3(2,2,2- trifluoretoksimetil)-4-metilsulfonil-benzoil]cikslоheksan-1,3-dion i
B) foramsulfuron protiv monokotilnih i/ili dikotilnih štetnih biljaka. Ova sredstva imaju bolje delovanje u odnosu na pojedinačno primenjene herbicice.

(54) SINERGISTIC HERBICIDAL AGENTS

(57) Invention herewith described refers to the herbicidal agent containing:
A) 2 - [chlor-3-(2,2,2 - trifluorotoxymethyl)-4-methyl-sulphonyl-benzoyl] cyclohexane-1,3-dione and
B) foramsulfuron effective against monocotyledonous and/or dycotyledonous pathogenic plants. These agents have a better effect than the individually applied herbicides.

---

(51) ***A 01 N 41/10*** (2006.01) **(11) 2011/0066**
A 01 N 37/34 (2006.01) **(13) A**
A 01 N 25/32 (2006.01)
A 01 P 13/02 (2006.01)
(21) P-2011/0066 (22) 25.11.2002.
(62) P-447/04
(30) DE 07.12.2001. 10160139.5
(54) SINERGISTIČKA HERBICIDNA SREDSTVA
(71) BAYER CROPSCIENCE AG, Alfred-Nobel-Str. 50, 49790 Monheim am Rhein, DE
(72) HACKER, Erwin, Margarethenstrasse 16, 65239 Hocheim, DE; BIERINGER, Hermann, Eichenweg 26, 65817 Eppstein, DE; KRÄHMER, Hansjörg, Kantstrasse 20, 65719 Hofheim, DE
(74) RASULIĆ, Bojana, Svetogorska 4, 11000 Beograd, RS
(57) Opisuju se hebicidno sredstvo koja sadrži
A) 2-[-chlor-3(2,2,2- trifluoretoksimetil)-4-metilsulfonil-benzoil]cikslоheksan-1,3-dion i
B) bromoksinil protiv monokotilnih i/ili dikotilnih štetnih biljaka. Ova sredstva imaju bolje delovanje u odnosu na pojedinačno primenjene herbicice.

(54) SINERGISTIC HERBICIDAL AGENTS

(57) Invention herewith described refers to the herbicidal agent containing:
A) 2 - [chlor-3-(2,2,2 -trifluorotoxymethyl)-4-methyl-sulphonyl-benzoyl] cyclohexane-1,3-dione and
B) bromoxynil effective against monocotyledonous and/or dycotyledonous pathogenic plants. These agents have a better effect than the individually applied herbicides.

(51) ***A 01 N 41/10*** (2006.01) **(11) 2011/0067**
A 01 N 43/70 (2006.01) **(13) A**
A 01 N 25/32 (2006.01)
A 01 P 13/02 (2006.01)
(21) P-2011/0067 (22) 25.11.2002.
(62) P-447/04
(30) DE 07.12.2001. 10160139.5
(54) SINERGISTIČKA HERBICIDNA SREDSTVA
(71) BAYER CROPSCIENCE AG, Alfred-Nobel-Str. 50, 49790 Monheim am Rhein, DE
(72) HACKER, Erwin, Margarethenstrasse 16, 65239 Hocheim, DE; BIERINGER, Hermann, Eichenweg 26, 65817 Eppstein, DE; KRÄHMER, Hansjörg, Kantstrasse 20, 65719 Hofheim, DE
(74) RASULIĆ, Bojana, Svetogorska 4, 11000 Beograd, RS
(57) Opisuju se hebicidno sredstvo koja sadrži
A) 2-[-chlor-3(2,2,2- trifluoretoksimetil)-4-metilsulfonil-berizoi]]cikslоheksan-1,3-dion i
B) terbutilazin protiv monokotilnih i/ili dikotilnih štetnih biljaka. Ova sredstva imaju bolje delovanje u odnosu na pojedinačno primenjene herbicice.

(54) SINERGISTIC HERBICIDAL AGENTS

(57) Invention herewith described refers to the herbicidal agent containing:
A) 2 - [chlor-3-(2,2,2 -trifluorotoxymethyl)-4-c methyl-sulphonyl- benzoyl] cyclohexane-1,3-dione and
B) terbuthylazine effective against monocotyledonous and/or dycotyledonous pathogenic plants. These agents have a better effect than the individually applied herbicides.

---

(51) ***A 01 N 41/10*** (2006.01) **(11) 2011/0068**
A 01 N 37/40 (2006.01) **(13) A**
A 01 N 39/04 (2006.01)
A 01 N 43/40 (2006.01)
A 01 N 47/34 (2006.01)
A 01 N 25/32 (2006.01)
A 01 P 13/02 (2006.01)
(21) P-2011/0068 (22) 25.11.2002.
(62) P-447/04
(54) SINERGISTIČKA HERBICIDNA SREDSTVA
(71) BAYER CROPSCIENCE AG, Alfred-Nobel-Str. 50, 49790 Monheim am Rhein, DE
(72) HACKER, Erwin, Margarethenstrasse 16, 65239 Hocheim, DE; BIERINGER, Hermann, Eichenweg 26, 65817 Eppstein, DE; KRÄHMER, Hansjörg, Kantstrasse 20, 65719 Hofheim, DE
(74) RASULIĆ, Bojana, Svetogorska 4, 11000 Beograd, RS
(57) Opisuju se hebicidno sredstvo koja sadrži
A) 2-[-chlor-3(2,2,2- trifluoretoksimetil)-4-metilsulfonil-benzoil]ciksIoheksan-1,3-dion i
B) najmanje jedno jedinjenje iz grupe 2,4-D, clopiralid, dicamba, diflufenzopir i fluroksipir protiv monokotilnih i/ili dikotilnih štetnih biljaka. Ova sredstva imaju bolje delovanje u odnosu na pojedinačno primenjene herbicide.

(54) SINERGISTIC HERBICIDAL AGENTS

(57) Invention herewith described refers to the herbicidal agent containing: A) 2 - [chlor-3-(2,2,2 -trifluorotoxymethyl)-4-methyl-sulphonyl - benzoyl] cyclohexane -1,3-dione and B) at least one compound from the group 2,4-D, clopyralid, dicamba, diflufenzopyr and fluroxypyr effective against monocotyledonous and/or dycotyledonous pathogenic plants. These agents have a better effect than the individually applied herbicides.

(51) ***A 01 N 41/10*** (2006.01) **(11) 2011/0069**
A 01 N 37/22 (2006.01) **(13) A**
A 01 N 37/26 (2006.01)
A 01 N 43/10 (2006.01)
A 01 N 43/78 (2006.01)
A 01 N 43/82 (2006.01)
A 01 N 25/32 (2006.01)
A 01 P 13/02 (2006.01)
(21) P-2011/0069 (22) 25.11.2002.
(62) P-447/04
(30) DE 07.12.2001. 10160139.5
(54) SINERGISTIČKA HERBICIDNA SREDSTVA
(71) BAYER CROPSCIENCE AG, Alfred-Nobel-Str. 50, 49790 Monheim am Rhein, DE
(72) HACKER, Erwin, Margarethenstrasse 16, 65239 Hocheim, DE; BIERINGER, Hermann, Eichenweg 26, 65817 Eppstein, DE; KRÄHMER, Hansjörg, Kantstrasse 20, 65719 Hofheim, DE
(74) RASULIĆ, Bojana, Svetogorska 4, 11000 Beograd, RS
(57) Opisuju se hebicidno sredstvo koja sadrži
A) 2-[-chlor-3(2,2,2- trifluoretoksimetil)-4-metilsulfonil-benzoil]ciksloheksan-1,3-dion i
B) najmanje jedno jedinjenje iz grupe acetohlor, alahlor, dimetenamid, flufenacet, mefenacet, metohlor, S-metolahlor, tenilhlor protiv monokotilnih i/ili dikotilnih štetnih biljaka. Ova sredstva imaju bolje delovanje u odnosu na pojedinačno primenjene herbicide.

(54) SINERGISTIC HERBICIDAL AGENTS

(57) Invention herewith described refers to the herbicidal agent containing:
A) 2 - [chlor-3-(2,2,2 -trifluorotoxymethyl)-4-methyl-sulphonyl-benzoyl] cyclohexane -1,3-dione and
B) At least one compound from the group of acetochlor, alachlor, dimethenamid, flufenacet, mefenacet, metochlor, S-metolachlor, tenilchlor
effective against monocotyledonous and/or dycotyledonous pathogenic plants. These agents have a better effect than the individually applied herbicides.

(51) ***A 47 B 71/00*** (2006.01) **(11) 2009/0349**
(13) A
(21) P-2009/0349 (22) 28.07.2009.
(30) RO 16.12.2008. A/00992/2008
(54) ORMAR ZA ROBU
(71) APOGRAD, d.o.o., Železnička bb, 22320 Inđija, RS
(72) MIKLOS KOKOR, Ianos, Capusu Mare nr. 222, jud. Cluj, RO
(74) PETOŠEVIĆ, Dušan, Kozjačka 15, 11000 Beograd, RS
(57) Ormar za robu za skladištenje dobara, posebno za apoteke, koji sadrži:
- kućište koje ima zidove od pločastog materijala i najmanje jedna vrata koja se mogu zaključati takođe napravljena od pločastog materijala, od kojih makar jedna vrata i kućište imaju toplotnu izolaciju,
- uređaj u kućištu za regulaciju unutrašnje temperature ormara za robu,
- elektronsku kontrolnu jedinicu (30) koja je u vezi sa uređajem za regulaciju temperature (9, 24), elektronska kontrolna jedinica (30) koja sadrži- sredstva obrade (31), -memorijska sredstva (32) za skladištenje kompjuterskih programa koji se izvršavaju sredstvima obrade, i
- sredstva komunikacije (33) koja omogućavaju komunikaciju koja sadrži podatke vezane za stanje i/ili sadržaj ormara za robu.

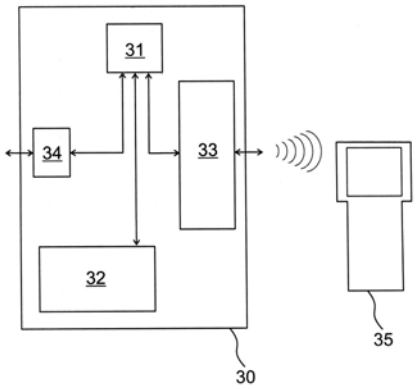

(54) CABINET FOR GOODS

(57) Invention herewith described refers to the cabinet for storage of goods, especially for drug stores, which includes: - The housing which has walls of plate materials and at least one door that can be locked also made of plate material, and at least one door and the housing have the thermal insulation. - Facilities in the housing for the regulation of the cabinet for goods internal temperature. - An electronic control unit (30) which is connected to the device for temperature control (9, 24), the electronic control unit (30) contains - processing mediums (31), - storage mediums (32) for storing computer programmes run by the processing mediums, and - communication mediums (33) providing a communication that contains data related to the condition and/or the content of the cabinet for goods.

(51) ***A 61 C 13/34*** (2006.01) **(11) 2010/0342**
A 61 C 13/38 (2006.01) **(13) A**
(21) P-2010/0342 (22) 27.07.2010.

(54) DODATAK ZUBNOM PARALELOMETRU ZA SEČENJE GIPSANIH MODELA I OBRADU ELEMENATA PARCIJALNE ILI FIKSNE PROTEZE PRI HORIZONTALNOM POLOŽAJU ALATA

(71) IGIĆ, Aleksandar, prof. dr., Cvijićeva 21/15, 18000 Niš, RS; IGIĆ, Marko, Cvijićeva 21/15, 18000 Niš, RS; IGIĆ, Stevan, Cvijićeva 21/15, 18000 Niš, RS
(72) IGIĆ, Aleksandar, prof. dr, Cvijićeva 21/15, 18000 Niš, RS; IGIĆ, Marko, Cvijićeva 21/15, 18000 Niš, RS; IGIĆ, Stevan, Cvijićeva 21/15, 18000 Niš, RS

(57) Dodatak zubnom paralelometru za sečenje gipsanih modela i obradu elemenata parcijalne ili fiksne proteze pri horizontalnom položaju alata je konstrukcija koja omogućuje promenu položaja alata potrebnog za analizu, merenje i obradu materijala za izradu zubnih proteza, iz vertikalnog u horizontalni položaj. Pored toga ovim pronalaskom omogućena je rotacija horizontalno postavljenog alata za 360° u odnosu na vertikalnu osu. Pronalazak je izradjen od aluminijumske legure. Jedan kraj pronalaska je u obliku cilindra (2), a drugi sa radijusom (9) i cilindričnim otvorom (6) čije su dimenzije promenljive zbog toga što je cilindrični otvor (6) u jednom delu (8) prosečen i služi za fiksaciju alata pomoću zavrtnja (VI) koji se uvrće u otvor sa navojem (7), dok je centralni deo (1) kvadratan. Cilindrični deo (2) služi za fiksaciju pronalaska u horizontalni deo dentalnog paralelometra u proizvoljnom tj. željenom položaju u odnosu na koordinate x i y. Rotacija pronalaska u odnosu na vertikalnu osu moguća je za 360°. Cilindrični deo (2) je sa udubljenjem (3)(4) cilindričnog oblika, da bi se smanjila težina pronalaska. Udubljenje (3) se završava približno na polovini pronalaska.

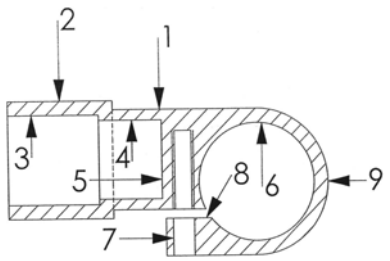

(54) ADDITION TO DENTAL PARALLELOMETER FOR CUTTING PLASTER MODELS AND PROCESSING ELEMENTS OF FIXED OR PARTIAL DENTURE WITH TOOL IN HORIZONTAL POSITION

(57) Invention herewith described refers to the addition to the dental parallelometer for cutting the plaster models and the processing elements of the fixed or the partial denture with the tool in the horizontal position. Its design allows the change of the tool position required for the analysis, measurement and processing of materials for making the dentures, from vertical to horizontal position. Besides, the invention allows the rotation of the horizontally mounted tool for 360 ° in regard to the vertical axis. The invention is made of aluminium alloy. One end of this invention is in the form of a cylinder (2), and the other with a radius (9) and a cylindrical hole (6) whose dimensions are variable because the cylindrical hole (6) is in one part (8) cut through and is used for fixation of the tool using the screw (VI), which is screwed into the threaded hole (7), while the central part (1) is quadratic. The cylindrical part (2) is used for fixation of the invention into the horizontal part of the dental parallelometer at an arbitrary i.e. desired position with respect to the coordinates x and y. Rotation of the invention in relation to the vertical axis is possible for 360°. The cylindrical part (2) has a cylindrically shaped recess (3), (4) for the reduction of the invention weight. The recess (3) ends approximately at the half of the invention.

(51) ***A 61 H 9/00*** (2006.01) **(11) 2009/0330**
A 61 B 5/02 (2006.01) **(13) A**
A 61 G 10/02 (2006.01)
(21) P-2009/0330 (22) 17.07.2009.

(54) DIJAGNOSTIČKO TERAPIJSKI APARAT ZA KUĆNI I AMBULANTNO STACIONIRANI TRETMAN DIJABETIČKOG I PUŠAČKOG STOPALA

(71) TRIČKOVIĆ, Kostadin S., dr, Kestenova 7a, Donja Vrežina, 18000 Niš, RS
(72) TRIČKOVIĆ, Kostadin S., dr, Kestenova 7a, Donja Vrežina, 18000 Niš, RS

(57) Prijava patenta se odnosi na pronalazak pod naslovom Dijagnostičko terapijski aparat za kućni i ambulantno-stacionirani tretman dijabetičkog i pušačkog stopala. Pronalazak spada u oblast medicinskih aparata i uredjaja za kućno lečenje i rehabilitaciju i za ambulantno stacioniranu dijagnostiku, lečenje i rehabilitaciju perifernih angiopatija stopala (A 61 H 9/00; A 61 B 5/02; A 61 G 10/02). Rešen je tehnički problem konstrukcije aparata za kućno lečenje i rehabilitaciju i ambulantno stacioniranu dijagnostiku i lečenje i rehabilitaciju perifernih krvnih sudova stopala opisanih kao dijabetičko i pušačko stopalo, koji osim terapije i rehabilitacije može da posluži i u dijagnostičke svrhe i praćenje efekata terapije i rehabilitacije. Dimenzije aparata su takve da se on može lako da prenosi. Suština pronalaska je u konstruisanju mini baro komore (1) prizmatičnog oblika na čijem ulaznom delu je izvedena pneumatska manžeta (3) sa središnjim kružnim otvorom (2) za provlačenje stopala ili šake. Manžeta (3) je spojena sa ručnom pumpicom ili kompresorom (4) i manometrom-displejom (5). Pritisak u komori (1) se ostvaruje od + 0, 20 kPa do - 0, 20 kPa preko ručne pumpice-kompresora (6), a kontrolisan je manometrom (7) i vakuum metrom (8). Na zadnjem delu komore (1) je kroz otvor (9) provučen u komoru (1) puls receptor ili manžetica za prst (10) na kabal crevu (11) čiji je drugi kraj, izvan komore (1), spojen sa EKG pisačem (12), u cilju izvodjenja digitalne pletizrnografije ili

morfooscilografije i ispisivanja pulsne krive (13). Unutar komore (1) postavljeno je termofor jastuče (14) na 12 V, radi ostvarivanja terapijski indikovane toplote i postavljanja stopala ili šake koji se tretira. Na bočnom delu komore (1) izveden je otvor (15) kroz koji je unutar komore (1) provučeno crevo (16) koje je spojeno sa čeličnom bocom O_2 (17) radi upuštanja O_2 u komoru (1) u cilju terapije pregangrenoznih i gangrenoznih stanja.

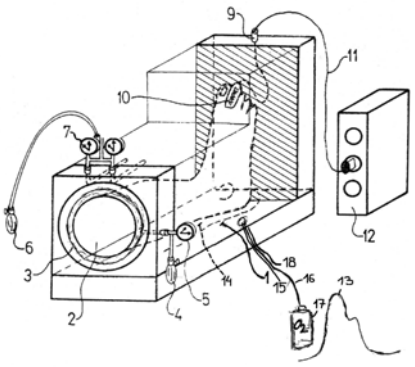

(54) DIAGNOSTIC - THERAPEUTIC DEVICE FOR HOME AND AMBULATORY OR STATIONARY TREATMENT OF DIABETIC AND SMOKER'S FOOT

(57) Invention herewith described refers to the diagnostic - therapeutic device for home and ambulatory or stationary treatment of diabetic and smoker's foot. The invention belongs to the field of the medical apparatus and devices for home treatment and rehabilitation and for ambulatory diagnosis and stationary treatment and rehabilitation of peripheral angiopathy of foot (A 61 H 9/00; A 61 B 5/02; A 61 G 10/02). The technical problem of the design of the device for home treatment and rehabilitation, and ambulatory diagnostic and stationary treatment and rehabilitation of the peripheral blood vessels of feet described as diabetic and smoker's foot, which besides the therapy and rehabilitation can be used in the diagnostic purposes and to monitor the therapy and rehabilitation effects, is solved. The dimensions of the device are such that it can be easily carried around. The essence of this invention is the design of the prismatic shaped mini-baro chamber (1) with a pneumatic cuff (3) at the front part having the central circular opening (2) for pulling the foot or hand through it. The cuff (3) is connected with the hand pump or the compressor (4) and manometer-display (5). Pressure in the chamber (1) is obtained from +0.20 kPa to -0.20 kPa through the hand pump - compressor (6), and controlled by the manometer (7) and a vacuum meter (8). At the rear of the chamber (1) there is an opening (9) pulled into the chamber (1), the pulse receptor or the cuff for a finger (10) on the cable pipe (11) whose other end, outside the chamber (1), is connected with the ECG printer (12) for the purpose of performing digital plethysmography or morpho oscillography and printing the pulse curve (13). Inside the chamber (1) there is set the 12 V heating pad (14) for obtaining the therapeutic indicated heat and placing feet or hands to be treated. On the side of the chamber (1) there is a hole (15) through which is inside the chamber (1) pulled the hose (16) and connected to the steel bottle of O_2 (17) for admitting O_2 into the chamber for the therapy of pregangrenous and gangrenous state.

(51) ***A 61 K 39/245*** (2006.01) **(11) 2010/0059**
C 12 N 7/04 (2006.01) **(13) A**
C 12 N 15/38 (2006.01)
C 12 N 15/85 (2006.01)
C 12 N 15/86 (2006.01)
A 61 K 39/205 (2006.01)
(21) P-2010/0059 (22) 26.08.2008.
(30) EP 28.08.2007. 07115093.2
EP 16.11.2007. 07120939.9
(86) WO 26.08.2008. PCT/EP08/061168
(87) WO 05.03.2009. WO 2009/027412

(54) REKOMBINANTNI KOI HERPESVIRUS (KHV) ILI HERPESVIRUS 3 CIPRINIDA(CyHV-3) I VAKCINA ZA PREVENCIJU BOLESTI UZROKOVANE SA KHV/CyHV-3 KOD CYPRINUS CARPIO CARPIO ILI CYPRINUS CARPIO KOI

(71) UNIVESITE DE LIEGE, Interface Entreprises-Unlversité, Liège Science Park, Avenue Pré-Aily, 4, B-4031 Angleur, BE
(72) COSTES, Berenice, Université deLiège, Faculty of Veterinary Medicine, Immunology-Vaccinology, B43b, Boulevard de Colonster, 20, B-4000 Liège, BE; LIEFFRIG, François, CERGroupe, Division Pisciculture, Rue du Carmel, 1, B-6900 Marloie, BE; VANDERPLASSCHEN, Alain, Université deLiège, Faculty of Veterinary Medicine, Immunology-Vaccinology, B43b, Boulevard de Colonster, 20, B-4000 Liège, BE
(74) POPOVIĆ, Srđa i ost., Takovska 19, 11000 Beograd, RS
(57) Predstavljeni pronalazak se odnosi na rekombinantni koi herpesvirus (KHV) ili herpesvirus 3 ciprinida (CyHV-3), koji je imunogen kod riba, poželjno kod šarana, poželjnije kod Cyprinus carpio, i na vakcinu za preventivan i/ili terapeutski tretman bolesti uzrokovane koi herpesvirusom (KHV) ili CyHV-3. Rekombinantni herpesvirus se koristi da obezbedi imunitet kod riba, poželjno šarana, poželjnije kod Cyprinus carpio, protiv bolesti uzrokovane koi herpesvirusom (KHV) ili herpesvirusom 3 ciprinida (CyHV-3).

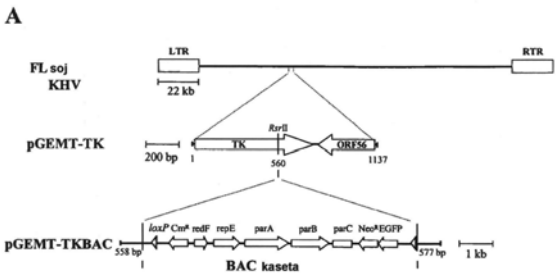

(54) RECOMBINANT KOI HERPES VIRUS (KHV) OR CIPRINID HERPESVIRUS 3 (CYHV-3) AND A VACCINE FOR THE PREVENTION OF A DISEASE CAUSED BY THE KHV/CYHV-3 IN CYPRINUS CARPIO CARPIO AND CYPRINUS CARPIO KOI

(57) Invention herewith described refers to the recombinant koi herpes virus (KHV) or Cyprinid herpes virus 3 (CyHV-3), which is immunogenic in fish, preferably in carps, more preferably in Cyprinus carpio, and to a vaccine for preventive and/or therapeutic treatment of a disease caused by koi herpes virus (SEC) or CyHV-3. The recombinant herpes virus is used to confer immunity on fish, preferably on carps, more preferably on Cyprinus carpio, against a disease caused by koi herpes virus (KHV) or Cyprinid herpes virus 3 (CyHV-3).

(51) ***A 61 N 2/00*** (2006.01) **(11) 2009/0361**
A 61 N 2/06 (2006.01) **(13) A**
A 61 K 9/06 (2006.01)
(21) P-2009/0361 (22) 12.08.2009.

(54) RAZMAZIVA MAGNETNA SUPSTANCA ZA APLIKACIJU NA KOŽU RADI MAGNETOTERAPIJE

(71) MIČIĆ, Vladislav, Jakova Galusa 13, 11000 Beograd, RS
(72) MIČIĆ, Vladislav, Jakova Galusa 13, 11000 Beograd, RS

(57) Prijava patenta se odnosi na kremu koja se primenjuje kod magneto terapije a konkretno se odnosi na razmaziva magnetna supstanca za aplikaciju na koži radi magnetoterapije. Ovim pronalaskom je rešeno dobijanje kreme koja se nanosi na kožu u cilju sprovođenja magnetoterapije čime je postignuto nesmetano kretanje pacijenta i precizno delovanje magnetnog polja na obolelo mesto. Ovo je ostvareno tako što se vrši mešanje tačno odmerene količine nosača koji može biti mast, krema gel ili slično sa takođe tačno odmerenom količinom mikro magnetnih čestica do dobijanja homogene smeše, pri čemu se radi pojačanja terapeutskih svojstava kroz nosač kroz određene tehnološke postupke mogu uneti sastojci od biljaka ili hemijske supstance sa pozitivnim sinergetskim osobinama.

(54) SPREADABLE MAGNETIC SUBSTANCE FOR APPLICATION TO THE SKIN FOR MAGNETOTHERAPY

(57) Invention herewith described refers to the cream that is applied for magnetic therapy and specifically relates to the spreadable magnetic substance for application to the skin for magneto therapy. With this invention is solved the obtaining of the cream that is applied to the skin for the purpose of magneto therapy allowing free movement of the patient and precise effects of magnetic fields on the affected area. This is achieved by mixing accurately measured amounts of the basic substance that can be ointment, cream gel, or the like with a precisely measured quantity of the micro-magnetic particles, to obtain a homogenous mixture, whereby for the amplification of the therapeutic properties into the basic substance with certain technological processes can be also included the ingredients of plants or chemicals with a positive synergetic properties.

(51) ***A 63 B 49/04*** (2006.01) **(11) 2009/0410**
(13) A
(21) P-2009/0410 (22) 23.09.2009.

(54) SPRAVA ZA URAVNOTEŽENJE TENISKOG REKETA

(71) MOMČILOVIĆ, Slobodan, Istarska 28, 11000 Beograd, RS
(72) MOMČILOVIĆ, Slobodan, Istarska 28, 11000 Beograd, RS

(57) Spravu za uravnoteženje teniskog reketa čine uložak (B) za podešavanje ravnotežne tačke teniskog reketa i kontra teg (D) koji ima funkciju neutralisanja težine uloška (B) kao preduslov za fino podešavanje ravnotežne tačke teniskog reketa pomeranjem kliznog tega (7) po spoljnoj cevastoj vodjici (5). Konstrukciju uloška (B) čine spoljna i unutrašnja cevasta vodjica (5 i 9) spojene na principu teleskopa i pričvršćene, preko nosača (1 i 10), u vratu rama (A) teniskog reketa. Nosači (1 i 10) se pomoću elastičnih krilaca (4) prilagodjavaju obliku kontaktne površine na ramu (A) teniskog reketa. Pomeranjem spoljne vodjice (5), u pravcu strelice (15), ostvaruje se spajanje ili razdvajanje unutrašnje vodjice (9) i nosača (1) radi sklapanja odnosno delimičnog rasklapanje uloška (B) u cilju zamene kliznog tega (7). Zatezanjem vijka (8) na kliznom tegu (7) ostvareno je, u isto vreme, fiksiranje kliznog tega (7) i spoljne vodjice (5). Takodje, vijak (8) zatezanjem prolazi kroz uzdužni kanal (6), na spoijnoj vodjici (5), i upire se u unutrašnju vodjicu (9) čime je ostvarena čvrsta veza sastavnih delova uloška (B).

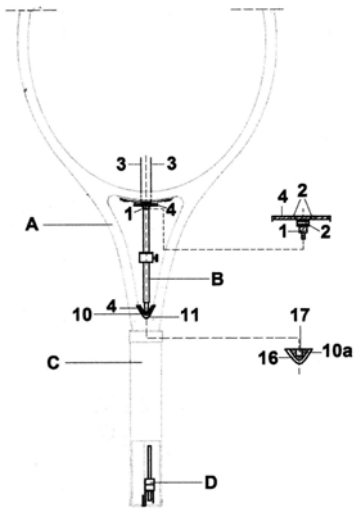

(54) TENNIS RACKET BALANCE DEVICE

(57) Invention herewith described refers to the tennis racket balance device containing the insert (B) for adjusting the balance point of the tennis racket and the counter weight (D) which has the function of neutralizing the insert weight (B) as a prerequisite for fine-adjustment of the equilibrium point of a tennis racket by moving the sliding weight (7) along the outer tubular guide (5). The design of the insert (B) consists of the external and internal tubular guides (5 and 9) connected by the principle of the telescope and attached through the brackets (1, 10), in the frame neck (A) of the tennis racket. The brackets (1 and 10) are by means of flexible wings (4) adapted to the shape of contact area on the frame (A) of the tennis racket. By moving the outer guide (5), in the direction of the arrow (15), there is accomplished a connection or disconnection of the internal guide (9) and the bracket (1) with the purpose of the assembling or partial dismantling of the insert (B) in order to replace the sliding weight (7). By tightening the screw (8) on the sliding weight (7), the sliding weight (7) and the external guide (5) fixing is accomplished at the same time. By tightening the screw (8) also goes through the longitudinal groove (6) in the outer guide (5), and leans against the inner guide (9) whereby the firm connection of the insert (B) components is achieved.

(51) ***B 01 F 3/04*** (2006.01) **(11) 2009/0447**
C 02 F 1/74 (2006.01) **(13) A**
C 02 F 7/00 (2006.01)
(21) P-2009/0447 (22) 15.10.2009.
(54) AERIZATOR ZA PIJAĆE I OTPADNE VODE
(71) PEŠOVIĆ, Predrag, Golubinačka 87, 22310 Šimanovci, RS; PEŠOVIĆ, Vojin, Danteova 50, 11000 Beograd, RS
(72) PEŠOVIĆ, Predrag, Golubinačka 87, 22310 Šimanovci, RS; PEŠOVIĆ, Vojin, Danteova 50, 11000 Beograd, RS
(57) Aerizator za pijaće i otpadne vode, sastoji se od T-razvodnika (4) u koji je uvrnut navojnim vratom (20) poklopac (3) na čijoj su cilindričnoj strani (17.) izbušeni radijalni otvori (7) i izveden žleb (14) preko koga je navučen gumeni prsten (6). U poklopac (3) uvrnuto je šuplje konusno telo (2) na čijem su omotaču izvedene kaskade (13) na kojima su radijalno izbušeni otvori (7) i žlebovi (14) na koje su navučeni prstenovi (6) od gume. Aerizatori (1) su međusobno spojeni cevima (5, 8), razvodnom kutijom (9) i vertikalnom dovodnom cevi (10).

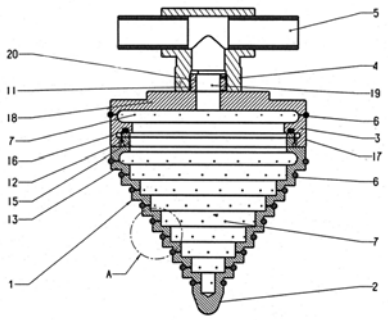

(54) AERATOR FOR DRINKING WATER AND WASTEWATER TREATMENT

(57) Invention herewith described refers to the aerator for drinking water and wastewater treatment consisting of a T-valve (4) where is screwed in with the threaded neck (20) the cover (3) on whose cylindrical side (17) are drilled radial holes (7) and executed the groove (14) over which is pulled a rubber ring (6). Into the cover (3) is screwed the hollow conical body (2) on whose sheath are made cascades (13) in which are the radially drilled holes (7) and grooves (14) over which are pulled rubber rings (6). The aerators (1) are interconnected with pipes (5.8), conduit box (9) and the vertical feed pipe (10).

(51) ***B 08 B 9/04*** (2006.01) **(11) 2010/0024**
B 08 B 5/02 (2006.01) **(13) A**
B 08 B 9/32 (2006.01)
(21) P-2010/0024 (22) 22.01.2010.
(54) SAMOHODNI UREDJAJ ZA ČIŠĆENJE I DEZINFEKCIJU VENTILACIONIH KANALA
(71) MILEKIĆ, Boriša, Višnjička 91a, 11000 Beograd, RS
(72) MILEKIĆ, Boriša, Višnjička 91a, 11000 Beograd, RS
(57) Pronalazak se odnosi na samohodni uredjaj za čišćenje, dezinfekciju i sušenje ventilacionih kanala, koji se sastoji iz postolja (3), sklopa prednjih mlaznica (9, 10), usisnog grla (5) i mlaznice (6) usisivača, sklopa zadnje mlaznice (14), dve grupe pogona (1, 18), korpe (12) sa usisnom kesom, kućišta (13) sa elektromagnetnim ventilima i dva kućišta (11) sa kamerama (20, 22) i osvetlenjem (21, 23). Na prednjem delu postolja (3), odnosno na platformi (7) koja je podesiva po visini, postavljene su mlaznice (9, 10), pri čemu je mlaznica (9) za skidanje naslaga prašine postavljena iznad, a mlaznica (10) za dezinfekciju ispod platforme (7). Ispod platforme (7), a u produžetku postolja (3), postavljeni su usisno grlo (5) usisivača i pored njega mlaznica (6) usisivača. Usisno grlo (5) povezano je crevom sa korpom (12) u kojoj je smeštena izmenljiva kesa za sakupljanje prašine. Na zadnjem delu postolja (3) postavljen je sklop zadnje obrtne mlaznice (14) za sušenje površina zidova. Postolje (3) postavljeno je na desnom pogonu (1) i levom pogonu (18). Na prednjem i zadnjem delu postolja (3) postavljene su video kamere (20, 22) i osvetlenja (21, 23).

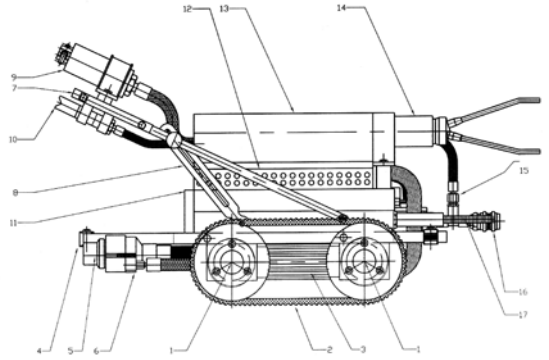

(54) SELF-PROPELLED DEVICE FOR CLEANING AND DISINFECTION OF VENTILATION DUCTS

(57) Invention herewith described refers to the self-propelled device for cleaning, disinfecting and drying of ventilation ducts consisting of the stand (3), the front nozzle assembly (9, 10), the suction narrowing (5) and the nozzle (6) of the dust collector, the rear nozzle assembly (14), two groups of drives (1, 18), the basket (12) with a suction bag, the housing (13) with electromagnetic valves and two housings (11) with cameras (20, 22) and lighting (21, 23). On the front of the stand (3), i.e. on the platform (7) which is adjustable in height, there are mounted the nozzles (9, 10), whereat the nozzle (9) for dust deposit removal is mounted above the platform (7) and the nozzle (10) for disinfection is mounted under the platform (7). Under the platform (7), in the extension of the stand (3), there are mounted the intake narrowing (5) of the dust collector and next to it the nozzle (6) of the dust collector. The intake narrowing (5) is connected through a hose with the basket (12) within which is placed a removable dust collection bag. At the back of the stand (3), there is mounted the rear rotating nozzle assembly (14) for wall surface drying. The stand (3) is mounted on the right drive (1) and on the left drive (18). On the front and the rear part of the stand (3) there are mounted video cameras (20, 22) and the lighting (21, 23).

---

(51) ***B 29 C 55/00*** (2006.01) **(11) 2010/0052**
B 29 C 55/04 (2006.01) **(13) A**
B 29 K 23/00 (2006.01)
(21) P-2010/0052 (22) 02.07.2008.
(30) EP 09.07.2007. 07013377.2
(86) 02.07.2008. PCT/EP2008/005385
(87) 15.01.2009. WO 2009/007045A1
(54) POLIETILENSKI FILM VELIKE JAČINE ISTEZANJA I SA VELIKOM GRANIČNOM ENERGIJOM CEPANJA PRI ISTEZANJU
(71) TEIJIN ARAMID B.V., Velperweg 76, NL-6824 BM Arnhem, NL
(72) DE WEIJER, Anton, Peter, Driehuizer Weg 338, NL-6525 PN Nijmegen, NL; VAN DE HEE, Hendrik, Laan der Verenigde Naties 129, NL-6716 JC Ede, NL; PETERS, Martinus, Wilhelmis, Maria, Gemma, Van Nispenstraat 103, NL-6521 KK Nijmegen, NL; RASTOGI, Sanjay, Loondermolen 9, NL-5612 MM Eindhoven, NL; WANG, Bing, Wevestraat 20, NL-6164 XC Geleen, NL
(74) POPOVIĆ, Srđa i ost., Takovska 19, 11000 Beograd, RS
(57) Predmetni pronalazak se odnosi na polietilenski film ultra visoke molekularne mase (UHMWPE) koji poseduje jačinu istezanja od najmanje 2.0 GPa, graničnu energiju cepanja pri istezanju od najmanje 30J/g, parametar Mw od najmanje 500.000 g/mol i Mw/Mn odnos od najviše 6. Polietilenski film se može proizvesti procesom koji obuhvata podvrgavanje polaznog UHMW polietilena čija je srednja masena molekularna masa najmanje 500.000 g/mol, čiji je modul elastičnog cepanja određen kao najviše 0,9MPa i to neposredno nakon topljenja materijala na temperaturi od 160°C, i čiji je Mw/Mn odnos najviše 6, koracima kompaktovanja i istezanja, pri čemu se ovi koraci sprovode pri takvim uslovima da se ni u jednom trenutku tokom obrade polimera njegova temperatura ne dovodi na nivo koji se nalazi iznad njegove tačke topljenja. Film se može upotrebljavati kao polazni materijal u bilo kojoj primeni koja zahteva veliku jačinu istezanja, kao i veliku graničnu energiju cepanja pri istezanju. Pogodne primene uključuju primenu u balistici, izradu užadi, kablova, mreža, tkanina kao i zaštitnu primenu.

(54) POLYETHYLENE FILM WITH HIGH TENSILE STRENGTH AND HIGH LIMITING TEAR ENERGY AT STRETCHING

(57) Invention herewith described refers to the polyethylene film of the ultra-high molecular weight (UHMWPE) which has a tensile strength of at least 2.0 GPa, and limiting tear energy at stretching of not less than 30 J/g, the parameter Mw of at least 500,000 g/mol and Mw/Mn ratio of up to six. Polyethylene film can be produced by a process that involves subjecting the starting UHMW polyethylene that has the mean mass molecular weight at least 500,000 g/mol, and whose elastic tearing modulus is determined as the highest 0.9 MPa and immediately after the melting of material at a temperature of 160°C, and whose Mw/Mn ratio is up to 6, to the compaction and elongation steps, where these steps are carried out in such conditions that at no time during the processing of polymers, its temperature is raised to a level above its melting point. The film can be used as a starting material in any application requiring a high tensile strength as well as high limiting tear energy at stretching. Suitable applications include the use in ballistics, for rope, cable, mesh and fabric manufacturing as well as protection.

---

(51) ***B 29 D 23/20*** (2006.01) **(11) 2010/0521**
(13) A
(21) P-2010/0521 (22) 04.06.2008.
(86) WO 04.06.2008. PCT/ES2008/000401
(87) WO 10.12.2009. WO 2009/147254
(54) POSTUPAK IZRADE TUBE POMOĆU FLEKSIBILNIH MATERIJALA
(71) CTL-TH PACKAGING, S.L.UNIPERSONAL, Hermanos Lumiere 1, E-01510 Miñano, Alava, ES
(72) FERNANDEZ DE MENDIOLA QUINTANA, Javier, c/Adrian Aldecoa, n°3, Piso 7-B, E-01008 Vitoria Alava, ES; VALPUESTA LANDA, Juan, Ignacio, C/Salvatierrabide no75, E-01007 Vitoria Alava, ES
(74) TOMIĆ, Jovana, Maršala Birjuzova 1, 11000 Beograd, RS

(57) Postupak izrade tube (1) od fleksibilnog materijala koji obuhvata omotač (3) i glavu (10), koji podrazumeva faze postavljanja ili izrade, putem ubrizgavanja (2) sklopa omotača (3) i produžetka (4), gde je produžetak (4) postavljen na jednom kraju omotača (3) i zatvara taj kraj u potpunosti ili delimično, i gde se na pomenutom produžetku (4) locira tačka ili tačke ubrizgavanja, odseca potpuno ili delimično produžetak (4) i odstranjuje odsečeni deo, i glava (10) se naliva na bilo koje mesto onog dela (2) sklopa (3) omotača i (4) produžetka koji preostaje kada se odstrani odsečeni deo. Produžetak (4) pruža izvesne prednosti, kao što je poboljšanje završne obrade glave (10) koja je nalivena, ili, u slučaju izrade sklopa (2), omogućavanje vađenja pomenutog sklopa (2) iz kalupa.

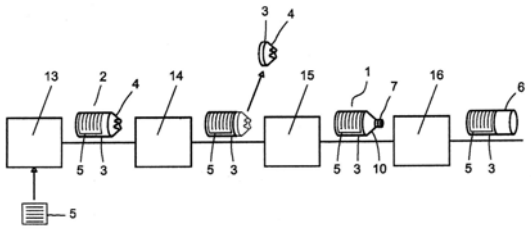

(54) PROCEDURE FOR MANUFACTURING A TUBE OF FLEXIBLE MATERIALS

(57) Invention herewith described refers to the procedure of making the tube (1) of flexible material comprising the sheath (3) and the head (10), including the mounting or production by injecting (2) the sheath assembly (3) and an extension (4), where the extension (4) is mounted on one end of the sheath (3) completely or partly closing that end, and where there are, on the aforementioned extension (4) located the point or the points of injection, and the extension (4) is completely or partly cut off and the cut off part is removed, and the head (10) is cast on any position on the part (2) of the sheath assembly (3) and the extension (4) remaining after the cut off part removal. The extension (4) offers certain advantages, such as improvement of the head (10) finishing that is cast on or, in the case of the assembly (2) production, allowing the removal of the mentioned assembly (2) from the mould.

(51) ***B 60 K 15/00*** (2006.01) **(11) 2009/0338**
(13) A
(21) P-2009/0338 (22) 22.07.2009.
(54) LASERSKA SVEĆICA
(71) NIKOLOV, Dušan, Španskih boraca 10, 11070 Novi Beograd, RS
(72) NIKOLOV, Dušan, Španskih boraca 10, 11070 Novi Beograd, RS

(57) Laserska svećica je pronalazak za auto industriju i to za paljenje goriva toplotnim laserom. Od izvora električne energije, koja se prenosi kablom koji je povezan za toplotni laser unutar keramičkog kućišta. Kada struje stigne do lasera, laser oslobadja toplotni zrak, koji vrši paljenje goriva. Ovo rešenje je mnogo efikasnije od starih svećica koje varnice i time izazivaju paljenje goriva, većom brzinom paljenja goriva, laserka svećica je mnogo efikasnija, zatim pali gorivo većom temperaturom što ima kao posledicu manju količinu goriva potrebnu za rad motora, ušteda goriva, veću snagu motora i duzi vek trajanja motornih delova.

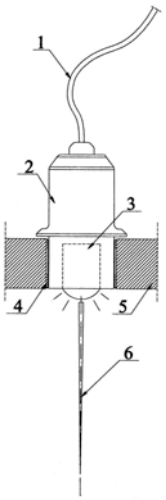

(54) LASER SPARK PLUG

(57) Invention herewith described refers to the laser spark plug which is the invention for the car industry i.e. for the fuel ignition with the thermal laser. From its source, the electricity is transferred through the cable connected to the thermal laser inside the ceramic housing. When the electricity reaches the laser, the laser releases a heat ray that ignites the fuel. This solution is much more efficient than the old spark plugs which spark and ignite the fuel, with faster ignition of the fuel and higher ignition temperature, the laser spark plug is more effective, which consequently reduces the amount of fuel required for the engine running, fuel economy, increases the engine power and prolongs the service life of the engine parts.

(51) ***B 60 L 11/00*** (2006.01) **(11) 2010/0454**
(13) A
(21) P-2010/0454 (22) 25.10.2010.
(54) TURBINE ZA DOPUNJAVANJE BATERIJA U VOZILU NA ELEKTRIČNI POGON
(71) NIKŠIĆ, Stevo, Milutina Miljkovića 54c, 11222 Jajinci, Beograd, RS
(72) NIKŠIĆ, Stevo, Milutina Miljkovića 54c, 11222 Jajinci, Beograd, RS

(57) Turbina (1) je sastavljena od osovine (9), lopatice turbine (10) i nosača turbine (2) sa lagerima (8). Turbina (1) je postavljena na najnižoj tački prednjeg i zadnjeg dela vozila da bi se omogućio što veći protok vazduha koji udara o lopatice (10) i tako preko reduktora snage i brzine (3) i preko generatora (4) proizvodi što veću količinu električne energije koja je potrebna da preko regulatora napona i struje (7) i preko preklopnika za naizmenično punjenje napuni bateriie (6) u toku vožnje automobila. U razvojnim centrima konstruktori će proračunati reduktor (3), generator (4) i regulator napona i struje kao i preklopnik za naizmenično punjenje (7) koji će zajedno sa turbinama omogućiti izvedbu automobila na električni pogon koji se neće zaustavljati da bi se napunile baterije (6).

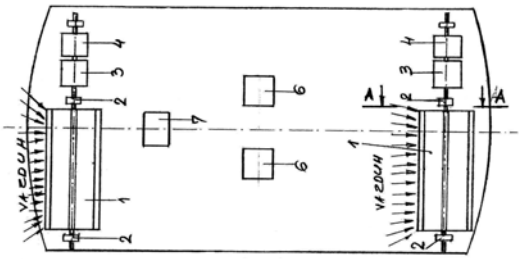

(54) TURBINES FOR REFILLING ELECTRIC VEHICLE BATTERIES

(57) Invention herewith described refers to the turbines for refilling the electric vehicle batteries. The turbine (1) consists of the shaft (9), the turbine blades (10) and the turbine bracket (2) with bearings (8). The turbine (1) is mounted on the lowest point of the front and the rear part of the vehicle to allow the largest possible air flow that strikes the blades (10) and so through the power reducer power and the speed reduction gear (3) and the generator (4) produces the highest rate of electricity which is required for the battery charge through the voltage and current regulator (7) as well as the change-over switch for alternate charging (6) while the car is moving. In the development centres, the designers will calculate the reducer (3), the generator (4) and the voltage and current regulator as well as (7) the change-over switch for alternate charging which will, together with the turbines, provide the design of an electric car that will not stop for battery (6) charge.

(51) ***B 61 K 9/12*** (2006.01) **(11) 2009/0355**
(13) A
(21) P-2009/0355 (22) 31.07.2009.
(54) UREĐAJ ZA NADZOR GEOMETRIJE I DETEKCIJE OŠTEĆENJA VENCA ŽELEZNIČKIH TOČKOVA U POKRETU
(71) ĆOSIĆ, Slavko, Ustanička 6, 31000 Užice, RS
(72) ĆOSIĆ, Slavko, Ustanička 6, 31000 Užice, RS

(57) Uređaj za nadzor geometrije i detekcije oštećenja venca železničkih točkova u pokretu, koji se sastoji od niza stalnih magneta (1) pogodno montiranih na obe šine (2) sa unutrašnje strane u čijim magnetnim poljima su fiksirani linearni hali senzori (3) zajedno obrazujući linearne segmentne senzore magnetnog polja (4) koji promenom jačine polja detektuju parametre ili nastala oštećenja venca točka(5) po ćelom obimu, kada venac točka (5) svoje kružno kretanje pretvara po šini (2) u pravolinijsko, pobuđujući svojom prisutnom masom, bez kontakta redom postavljene segmentne senzore (4) u tačci dodira sa šinom, obrazujući u njima električni signal srazmeran parametrima ili nastalim oštećenjima venca točka u svim vremenskim uslovima i ostvarenim železmčkim brzinama koji se zatim pojačava i konvertuje u elektronskom bloku (6). Putem informacionih tehnologija (7) signal se prenosi u komandni centar i primenom odgovarajućeg softvera vrši se uvid i stalna kontrola venaca točkova voznih sredstava na nov i za sada neprimenjen način u železničkim tehnologijama.

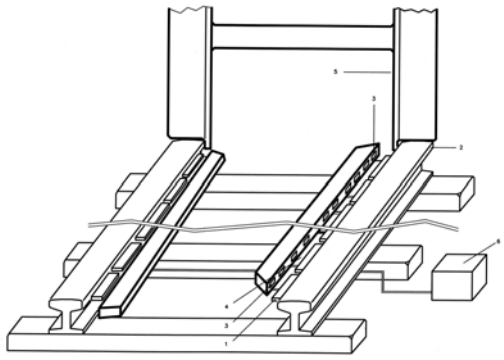

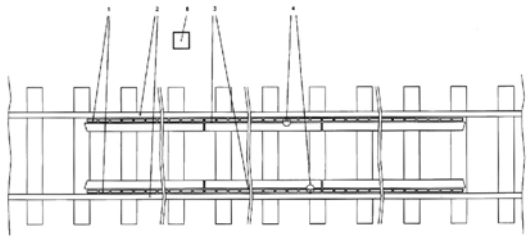

(54) DEVICE FOR GEOMETRY CONTROL AND RAILWAY WHEEL RIM DAMAGE DETECTION

(57) Invention herewith described refers to the device for geometry control and damage detection of the railway wheel rims in movement consisting of a series of permanent magnets (1) suitably mounted on the inner side of both rails (2) in whose magnetic fields are fixed linear hall sensors (3) forming together the linear segment sensors of the magnetic field (4) which by the change of the field strength detect the parameters or damages of the wheel rim (5) across the whole

perimeter, when the wheel rim (5) transforms its circular motion on the rail (2) into a linear motion, inducing by its present mass, without the contact with order set segment sensors (4) in the contact point of with the rail, forming in them an electrical signal proportional to the parameters or the wheel rim damage in all weather conditions and achieved railway speeds which is then amplified and converted in the electronic block (6). Through the information technologies (7), the signal is transmitted to the control centre and by use of the corresponding software the access and permanent control of the railway wheel rims are performed in a new and up to now unused method in the railway technologies.

---

(51) ***B 64 C 19/00*** (2006.01) **(11) 2009/0326**
(13) A
(21) P-2009/0326 (22) 16.07.2009.
(54) MULTI-FUNKCIJSKI AVIONSKI AKVIZICIONI SISTEM MFAS-AE1
(71) VOJNOTEHNIČKI INSTITUT, Ratka Resanovića br. 1, 11030 Beograd, RS
(72) MARKOVIĆ, Miodrag, Vojvode Dovezenskog 7, 11000 Beograd, RS; PAPIĆ, Dragana, Peđe Milosavljevića 50, 11070 Novi Beograd, RS; NIKOLIĆ, Momir, Radovana Simića-Cige 23, 11000 Beograd, RS
(57) Мулти-функцијски авионски аквизициони систем је намењен, током развојних летних испитивања ваздухоплова, за аквизицију сигнала потребних за анализу и одређи-вање општих и специјалних перформанси и карактеристика динамике и стабилности ваздухоплова. Мулти функцијски аквизициони систем се састоји од три засебна уређаја и то: управљачке (1), мониторинг (2) и аквизиционе (3) јединице. Управљачка и аквизициона јединица су модули који су уграђени у авион и непосредно обављају процес аквизиције, док је мониторинг јединица преносни PC рачунар који се користи током радњи поставке (баждарење и калибрација) и преноса података мерно-аквизиционог ланца после изведеног лета. Управљачка јединица (1) је уграђена на пилотском пулту и пилоту омогућава надгледање, управљање и контролу записа лета. Коришћењем матричног екрана и тастера Старт, Стоп и Топ управљачке јединице пилот врши надгледање и контролу аквизиционе јединице, тиме и целог процеса аквизиције. Аквизициона јединица (3) је уграђена у простор мерно-аквизиционе опреме, задужена за напајање авионских сензора (4а), процесирање и аквизицију задатих сигнала (46). Повезана са управљачком јединицом током летних испитивања извршава процес дигиталне конверзије сигнала са сензора, њихову обраду и уписивање на меморијске чипове за каснију анализу. Конектори П1 и П2 се користе за увођење аналогних сензорских сигнала у систем, конектори COM1, COM2, COM3 су коришћени за повезивање: навигационе или мониторинг јединице, GPS пријемника и управљачке јединице респективно. Мониторинг јединица је преносни PC рачунар који служи током процеса калибра-ције сензора, за визуелизацију и мониторинг аквизиције, за баждарење и калибрацију параметара аквизиционог система и за преузимање снимљених података аквизираног лета.

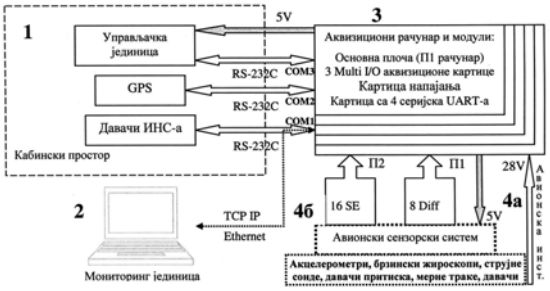

(54) MULTIFUNCTIONAL AVIATION ACQUISITION SYSTEM MFAS-AE1

(57) Invention herewith described refers to the multifunctional aviation acquisition system MFAS-AE1 intended, during the aircraft developing flight tests, for the acquisition of signals necessary for analysis and determination of general and special performances and characteristics of the aircraft dynamics and stability. The multifunctional acquisition system consists of three separate devices, as follows: the control (1), the monitoring (2) and the acquisition (3) units. The control and acquisition units are modules that are installed into the aircraft and immediately carry out the acquisition process, while the monitoring unit is a portable PC that is used during the setting (gauging and calibration) and for transmission of measurement and data acquisition chain after the flight. The control unit (1) is mounted on the pilot's console and allows monitoring, management and control of flight records. Using the matrix display and key buttons Start, Stop and TOP of the control unit, the pilot monitors and controls the acquisition unit, and thus the entire acquisition process. The acquisition unit (3) is installed into the space for measuring and data acquisition equipment, and is responsible for the supply of air sensors (4a), processing and acquisition of the given signals (46). It is connected with the control unit during the flight tests and performs the digital signal conversion from sensors, their processing and recording to memory chips for later analysis. The connectors W and P2 are used for the introduction of the analogue sensor signals into the system, the connectors COM1, COM2, COM3 are used to connect: navigation or monitoring unit, the GPS receiver and the control unit respectively. The monitoring unit is the portable PC computer that is used during the sensor calibration process, for visualization and monitoring of the acquisition, for gauging and calibration of the acquisition system parameters and for downloading the recorded data of the flight subjected to acquisition.

(51) ***B 65 D 5/43*** (2006.01) **(11) 2009/0376**
(13) A
(21) P-2009/0376 (22) 25.08.2009.
(54) KUTIJA ZA TRANSPORT I SKLADIŠTENJE NOVČANICA
(71) PEŠOVIĆ, Predrag, Golubinačka 87, 22310 Šimanovci, RS; PEŠOVIĆ, Vojin, Danteova 50, 11000 Beograd, RS
(72) PEŠOVIĆ, Predrag, Golubinačka 87, 22310 Šimanovci, RS; PEŠOVIĆ, Vojin, Danteova 50, 11000 Beograd, RS
(57) Kutija za transport i skladištenje novčica, sastoji se od koritastog postolja (1) u čijim su žlebovima (5) postavljene pregrade (4) a na čeonoj strani ruba (8) izvedeni su četvrtasti otvori (6) u koje zalaze kukasti ispusti (7), izvedeni na unutrašnjoj strani poklopca (2). Na čeonoj strani ruba (8) izveden je žleb (9) sa zaptivkom (3). Prema varijanti I, na čeonoj strani ruba (8) koritastog postolja (1), iz jedna sa rubom (8), izliven je po ćelom obimu greben (10).

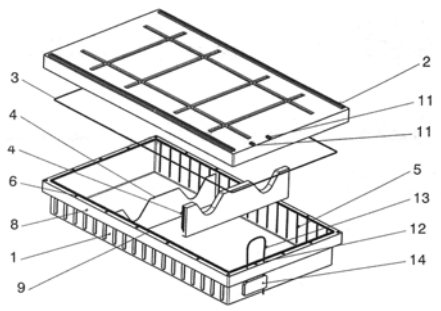

(54) CASE FOR TRANSPORT AND STORAGE OF BANKNOTES

(57) Invention herewith described refers to the case for the transport and storage of banknotes consisting of a barrel shaped stand (1) in whose grooves (5) are set the partitions (4), and on the front edge (8) are made the rectangular openings (6), into which protrude the hook projections (7), made on the inside of the cover (2). On the front edge (8) there is the groove (9) with the gasket (3). According to the variant I, on the front edge (8) of the barrel shaped base (1), together with the edge (8), is cast the ridge (10) along the entire volume.

(51) ***B 65 D 45/32*** (2006.01) **(11) 2010/0095**
B 65 D 51/16 (2006.01) **(13) A**
B 65 D 55/02 (2006.01)
B 65 D 55/06 (2006.01)
(21) P-2010/0095 (22) 29.08.2008.
(30) NL 29.08.2007. 2000838
(86) WO 29.08.2008. PCT/nl2008/050576
(87) WO 05.03.2009. WO 2009/028946
(54) ZATVARAČ ZA BOCU I SKLOP TAKVOG ZATVARAČA I BOCA
(71) 4SIGHT INNOVATION B.V., Fluorietweg 31d, NL-1812 RR Alkmaar, NL
(72) AKVELD, Wessel, Anton, Caspar, Marco Polostraat 279-hs, NL-1056 DN Amsterdam, NL
(74) PETOŠEVIĆ, Dušan, Kozjačka 15, 11000 Beograd, RS
(57) Pronalazak se odnosi na zatvarač za bocu. Pronalazak se takođe odnosi na sklop takvog 5 zatvarača i boce. Pronalazak se na dalje odnosi na metod sklapanja sklopa takvog zatvarača i boce.

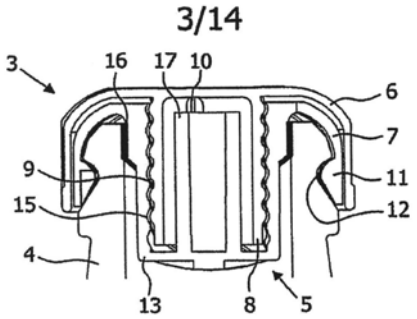

(54) CLOSURE FOR A BOTTLE, AND ASSEMBLY OF SUCH A CLOSURE AND A BOTTLE

(57) Invention herewith described refers to the bottle closure. The invention also refers to the assembly of such a closure and a bottle. The invention further refers to the method of assembling such a closure and a bottle.

(51) ***C 07 D 209/80*** (2006.01) **(11) 2010/0338**
A 61 K 31/403 (2006.01) **(13) A**
A 61 P 43/00 (2006.01)
C 07 D 209/88 (2006.01)
(21) P-2010/0338 (22) 22.01.2003.
(62) P-624/04
(30) US 24.01.2002. 60/351, 384
(54) FLUOROSUPSTITUISANI CIKLOALKANOINDOLI I NJIHOVA UPOTREBA KAO ANTAGONISTA PROSTAGLANDINSKIH D2 RECEPTORA
(71) MERCK FROSST CANADA LTD., 16711 Trans-Canada Highway, Kirkland, Québec H9H 3L1, CA
(72) BERTHELETTE, Carl, 16711 Trans-Canada Highway, Kirkland, Québec H9H 3L1, CA; LACHANCE, Nicolas, 16711 Trans-Canada Highway, Kirkland, Québec H9H 3L1, CA; LI, Lianhai, 16711 Trans-Canada Highway, Kirkland, Québec H9H 3L1, CA; STURINO, Claudio, 16711 Trans-Canada Highway, Kirkland, Québec H9H 3L1, CA; WANG, Zhaoyin, 16711 Trans-Canada Highway, Kirkland, Québec H9H 3L1, CA
(74) ŽIVKO MIJATOVIĆ & PARTNERS, Takovska 58, 11000 Beograd, RS

(57) Fluoro supstituisani cikloalkanoindol derivati formule (I) i njihove farmaceutski prihvatljive soli, gde je n = 0 ili 1; m = 1, 2 ili 3; R_1 = H, C_1-C_3 alkil, halogenizovani C_1-C_3 alkil ili ciklopropil; R_2 = 4-hlorofenil ili 2, 4, 6-trihlorofenil, su antagonisti prostaglandina, i kao takvi su korisni u lečenju prostaglandin posredovanih oboljenja.

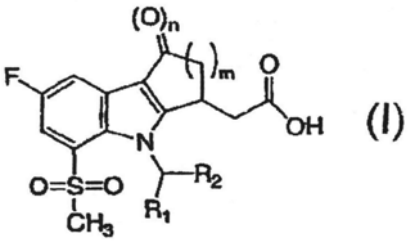

(I)

(54) FLUORO SUBSTITUTED CYCLOALKYL-INDOLES AND THEIR USE AS PROSTAGLANDIN D2 RECEPTOR ANTAGONISTS

(57) Invention herewith described refers to the fluoro substituted cycloalkyl-indole derivatives of the formula (I) and their pharmaceutically acceptable salts, where n = 0 or 1; m = 1, 2 or 3; R_1 = H, C_1-C_3 alkyl, halogenated C_1-C_3 alkyl or cyclopropyl; R_2 = 4-chlorophenyl or 2, 4, 6-trichlorophenyl are the prostaglandin antagonists, and as such are useful in treating prostaglandin mediated diseases.

---

(51) ***D 06 F 17/04*** (2006.01) **(11) 2010/0199**
D 06 F 18/00 (2006.01) **(13) A**
A 47 G 25/14 (2006.01)
D 06 F 58/10 (2006.01)
D 06 F 69/00 (2006.01)
D 06 F 73/00 (2006.01)
(21) P-2010/0199 (22) 07.10.2008.
(30) IT 31.10.2007. BS2007A000168
(86) WO 07.10.2008. PCT/IT2008/000637
(87) WO 07.05.2009. WO 2009/057177
(54) MAŠINA ZA ČIŠĆENJE, PRANJE, SUŠENJE I PEGLANJE VEŠA I ODEĆE
(71) ZAGLIO, Sergio, Via Belvedere, 28, I-46043 Castiglione Delle Stiviere, Mantova, IT
(72) ZAGLIO, Sergio, Via Belvedere, 28, I-46043 Castiglione Delle Stiviere, Mantova, IT
(74) GRAOVAC, Zoran, Mirijevski venac 4, 11000 Beograd, RS
(57) Mašina za čišćenje, pranje, sušenje i peglanje veša i odeće, se odnosi na multifunkcionalnu mašinu za čišćenje, pranje, sušenje i peglanje veša i odeće za perionice. Mašina sadrži kućište ili okvir (11) koji definiše komoru (12) za tretiranje koja je hermetički zatvorena i opremljena držačima (15) za kačenje veša (14), kao što su posteljina, tkanine i odeća, koji treba da se tretira, multifunkcionalna mašina koristi sredstva za uklanjanje fleka, pranje i ispiranje, sredstva za sušenje; i sredstva za peglanje veša za vreme dok je obešen i rastegnut u komori za tretiranje.

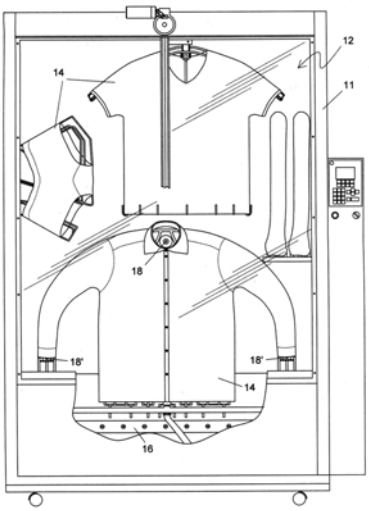

(54) MACHINE FOR CLEANING, WASHING, DRYING AND IRONING LAUNDRY AND CLOTHING

(57) Invention herewith described refers to the multifunctional machine for cleaning, washing, drying and ironing laundry and clothing for laundries. The machine contains the housing or frame (11) that defines the chamber (12) for the treatment which is hermetically sealed and equipped with holders (15) for hanging laundry (14), such as bedding, fabrics and clothing, which is to be treated, the agents for stain removal, cleaning and washing, mediums for laundry drying and ironing while it is hanged and stretched in the chamber for treatment.

---

(51) ***E 02 D 29/14*** (2006.01) **(11) 2010/0572**
E 03 F 5/02 (2006.01) **(13) A**
E 05 B 65/00 (2006.01)
(21) P-2010/0572 (22) 29.12.2010.
(54) SIGURNOSNI ZATVARAČ KOJI SE POSTAVLJA NA KANALIZACIONE REŠETKE SLIVNIKA, POKLOPCE KANALIZACIONIH I VODOVODNIH OKNA I POKLOPCE OSTALIH PODZEMNIH INSTALACIJA, ZA SPREČAVANJE KRAĐE
(71) SREDOJEVIĆ, Milan, Bul. Zorana Đinđića 166/6, 11174 Novi Beograd, RS
(72) SREDOJEVIĆ, Milan, Bul. Zorana Đinđića 166/6, 11174 Novi Beograd, RS
(57) Sigurnosni zatvarač koji se postavlja na kanalizacione rešetke slivnika, poklopce kanalizacionih i vodovodnih okna i poklopce ostalih podzemnih instalacija, za sprečavanje krađe, prema pronalasku,

predviđen je za više načina primene. Kod jednog načina primene sigurnosni zatvarač (1) sastoji se od kompaktnog sklopa sa čeličnim pločama (4, 5) i vertikalnim bočnim pločama (14, 15) i sa na gornjoj ploči (4) izvedenim otvorom (6) sa uzdužnim prorezom (6') za prolaz odgovarajućeg ključa (7) i sa u donjoj ploči (5) ugrađenom bravicom (13) sa kukom (12) koja ulazi u zid slivnika (3). Kod drugog načina primene zatvarač (1) se postavlja u koritasto kućište (K) pričvršćeno za donji deo paralelopipednog poklopca (20) odnosno okruglog poklopca (21) i delimično pregrađeno sa dve kose pregrade (29), sa ispustima (30), obrazujući otvor (31) u vidu lastinog repa i dva prostora različitih veličina, pri čemu je u većem prostoru u otvor smeštena bravica (13) sa obrtnom kukom (12) koja pri zaključavanju ključem (7) ulazi u zid rešetke (2) slivnika (3). Ključ (7) sa šupljom konusnom glavom (9) sa šestougaonom osnovom ima na dve konusne stranice glave (9) izvedena dva poprečna ureza (10) za prolaz ključa (7) kroz otvor (31) za postavljanje na bravicu (13) sa obrtnom kukom (12). U daljoj primeni zatvarača (1), kod zaključavanja rešetke (2) slivnika (3), čvrsto je spojen vertikalni krak zuba (23) zajedno rebro rešetke (2), a horizontalni krak ulazi ispod rama (24) rešetke (2), dok je u otvor na rebru rešetke (2) postavljena šestougaona bravica (13) sa kukom (12) za zaključavanje. Zaključavanje se vrši okretanjem ključa (7) na bravici (13) za 90° u jednu ili drugu stranu kada obrtna kuka (12) ulazi ispod rama (24) rešetke (2).

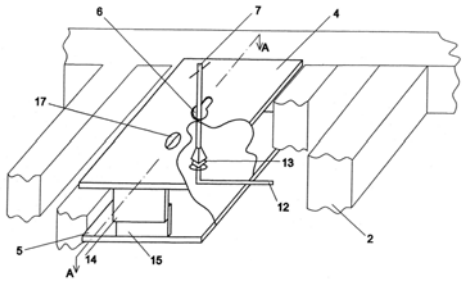

(54) THEFT PREVENTION SECURITY LOCK FOR THE SEWER DRAIN GRATES, COVERS OF SAWAGE AND WATER MANHOLES AND COVERS OF OTHER UNDERGROUND UTILITIES FOR

(57) Invention herewith described refers to the theft prevention security lock for the sewer drain grates, covers of sewage and water manholes and covers of other underground utilities designed for various applications. According to one method of application, the security lock (1) consists of a compact assembly with steel plates (4, 5) and vertical side plates (14, 15) and in the top plate (4) there is the opening (6) with a longitudinal slot (6') made for the right key (7) and with in the lower plate (5) built-in lock (13) with the hook (12) entering the wall of the drain (3). According to other method of application, the lock (1) is placed into the barrel shaped housing (K) attached to the lower part of the parallelepiped cover (20) or a round cover (21) and partially converted to two slanting partitions (29), with projections (30), forming an opening (31) in the form of swallow tail and two spaces of different sizes, within the larger space, in a hole, there is a lock (13) with a rotary hook (12) that, when locked by the key (7), enters the wall of the grate (2) of the drain (3). The key (7) with the hollow conical head (9) and the hexagonal base has on two conical sides of the head (9) two transverse cuts (10) for the key (7) passage through the hole (31) to set on the lock (13) with the rotating hook (12). The further implementation of the security lock (1), when locking the grate (2) of the drain (3), the vertical arm of the tooth (23) is firmly connected to a rib of the grate (2), and the horizontal arm enters underneath the frame (24) of the grate (2), and in the hole in the grate rib (2) there is placed the hexagonal lock (13) with a hook (12) to lock. The locking is performed by turning the key (7) in the lock (13) for 90 ° to one side or the other when the rotating hook (12) enters underneath the frame (24) of the grate (2).

(51) ***E 03 C 1/02*** (2006.01) **(11) 2010/0212**
(13) A
(21) P-2010/0212 (22) 13.05.2010.

(54) MONTAŽA MERAČA PROTOKA ZA MERENJE POTROŠNJE VODE

(71) PRAVDA, Ladislav, Dubrovačka 2, 21000 Novi Sad, RS
(72) PRAVDA, Ladislav, Dubrovačka 2, 21000 Novi Sad, RS

(57) Montaža merača protoka za merenje potrošnje vode koje koriste individualni potrošači, prestavlja rešenje da se na postojeću instalaciju montiraju merači a da se ne mora građevinski intervenisati. Senzor (1), ali i mehanički merač (11) se ugrađuju pomoću reducira (6.1, 6.2) odnosno holendera (14.1, 14.2) koji su standardni. Ovi merači obezbeđuju svakom potrošaču da u svako doba ima podatke o potrošnji. Kod digitalnog merača ekran se može montirati i za daljinsko očitavanje.

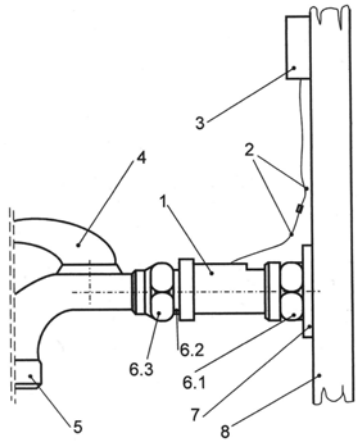

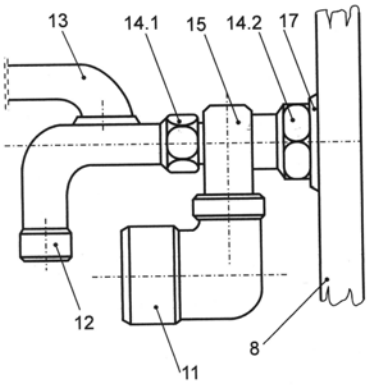

(54) MOUNTING OF WATER CONSUMPTION FLOW METER

(57) Invention herewith described refers to the mounting of the flow meter for measuring the water consumption used by individual consumers, and represents a solution how to mount the meters on an existing installation without any building works. The sensor (1), but also the mechanical flow meter (11) are mounted by using reducers (6.1, 6.2) or union flat joints (14.1, 14.2), which are standard. These meters provide data on consumption of water to every consumer at any time. With digital flow meters, the display can be mounted for a remote reading as well.

(51) ***E 04 D 13/18*** (2006.01) **(11) 2010/0076**
E 04 D 1/08 (2006.01) **(13) A**
F 24 J 2/04 (2008.04)
(21) P-2010/0076 (22) 22.02.2010.
(54) ŠUPLJI PLASTIČNI CREP
(71) FIKSMER, Marjan, V. Brigada 86b, 26340 Bela Crkva, RS; KRATOHVIL, Zlatko, Cara Lazara 8, 26340 Bela Crkva, RS
(72) FIKSMER, Marjan, V. Brigada 86b, 26340 Bela Crkva, RS; KRATOHVIL, Zlatko, Cara Lazara 8, 26340 Bela Crkva, RS
(57) Šuplji plastični crep izrađen je od plastike poseduje šupljinu (5) koja je namenjena za protok tečnosti koja prikuplja solarnu energiju. Na donjoj strani nalazi se priključak (3) namenjen za ulaz hladne tečnosti a na gornjoj strani nalazi se priključak (2) za izlaz tople tečnosti. Pomoću spojke (8) slika (5) obezbeđuje se spajanje sa priključkom (2) na donjem redu crepova sa priključkom (3) na gornjem redu crepova.

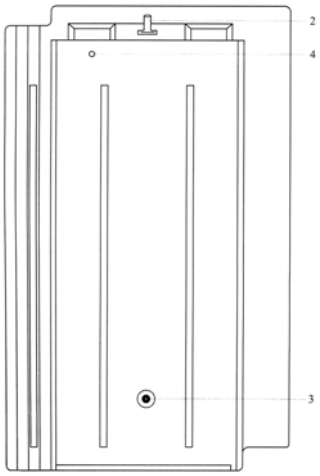

(54) HOLLOW PLASTIC TILES

(57) Invention herewith described refers to the hollow plastic tiles made of plastic with a hollow (5) inside of the plastic intended for the flow of fluid that collects solar energy. On the bottom side there is a connection (3) intended for the cold fluid entering, and on the upper side there is the connection (2) for the hot liquid output. The coupling (8) provides the connection to the connection (2) on the lower roe of tiles with the connection (3) on the top row of tiles.

(51) ***E 04 F 15/00*** (2006.01) **(11) 2009/0482**
(13) A
(21) P-2009/0482 (22) 05.11.2009.
(54) UREĐAJ ZA NIVELACIJU PODOVA NA GUMENIM APSORBERIMA ZA STAMBENE I POSLOVNE PROSTORE
(71) RADIVOJEVIĆ, Mirko, Dr. Mišovića 156, 32104 Čačak, RS
(72) RADIVOJEVIĆ, Mirko, Dr. Mišovića 156, 32104 Čačak, RS
(57) Uređaj za nivelaciju podova na gumenim apsorberima za stambene i poslovne prostore, se sastoji od aluminijumskog rama (1) (koji se rasklapa), četiri navojna vretena (2) koja se nalaze u uglovima rama (1), po dva lasera (3) na stranicama rama (1) i 32 vertikalno postavljene merne trake (4) sa metalnim nosačima. Uređaj se postavi na betonsku ploču (5) zaokretanjem navojnih vretena (2) postiže se horizontalnost poklapanjem snopa svetlosti iz lasera (3) sa zadatom i obeleženom na zidu, linijom (6). Vertikalni merači sa metalnim nosačima svojom masom se nezavisno oslanjaju na betonsku ploču (5) i čitanjem vrednosti mera sa meraih traka, dobijamo i vrednosti odstupanja koje treba kompenzovati gumenim podloškama na gumenom apsorberu.

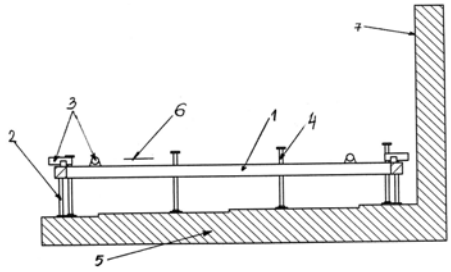

(54) FLOOR LEVELLING DEVICE ON RUBBER ABSORBERS FOR RESIDENTIAL AND BUSINESS PREMISES

(57) Invention herewith described refers to the floor levelling device on rubber absorbers for residential and business premises consisting of an aluminium frame (1) (which can be disassembled), four jack screws (2), located at the corners of the frame (1), two lasers (3) on each side of the frame (1) and 32 vertically mounted strain gauges (4) with metal girders. The device is placed on the concrete slab (5), by twisting the jack screws (2) the horizontal position is achieved by matching beam of light from the laser (3) with a set and marked on the wall, line (6). The vertical gauges with metal girders with their mass independently abut on the concrete slab (5) and by reading the values on the strain gauges we get the values of deviation that should be compensated by rubber washers on the rubber absorber.

(51) ***E 04 F 15/22*** (2006.01) **(11) 2009/0481**
(13) A
(21) P-2009/0481 (22) 05.11.2009.
(54) PODOVI SA KERAMIČKIM I MERMERNIM OBLOGAMA NA GUMENIM APSORBERIMA ZA STAMBENE PROSTORE
(71) RADIVOJEVIĆ, Mirko, Dr. Mišovića 156, 32104 Čačak, RS
(72) RADIVOJEVIĆ, Mirko, Dr. Mišovića 156, 32104 Čačak, RS
(57) Podovi sa keramičkim i mermernim oblogama na gumenim apsorberima za stambene i poslovne prostore se sastoji od sloja keramičke ili mermerne obloge(1) koja se pomoću filma lepila (2) čvrsto vezuje za šper-ploču (4) koja je postavljena na šper-ploču (5) međusobno pod uglom od 45º, dok se gumeni apsorberi (6) na određenom rastojanju čvrsto vezuju za ploču (5). Nivelaciju neravnina betonske ploče (9) vršimo pomoću odgovarajućeg uređaja podmetanjem gumenih podloški (7). Mermerne lajsne (8) oslanjaju se na zid (10) i oblogu (1). Ovakvom konstrukcijom dobijamo zvučnu i toplotnu izolaciju, eliminisanje ravnajućeg sloja betona, postavljanje kompletne infrastrukture u prostor (11), a na betonsku ploču (9). Vreme izgradnje objekata skraćuje se za najmanje 45 dana.

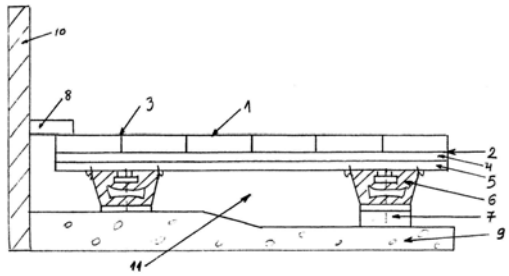

(54) CERAMIC AND MARBLE FLOOR COVERINGS ON RUBBER ABSORBERS FOR RESIDENTIAL AND BUSINESS PREMISES

(57) Invention herewith described refers to the ceramic and marble floor coverings on rubber absorbers for residential and business premises consisting of a layer of ceramic or marble covering (1) by an adhesive film (2) firmly attached to the plywood plate (4) which is placed on the plywood plate (5) making an angle of 45 degrees, while the rubber absorbers (6) are in the same way connected at a specific distance to the plate (5). The levelling of an uneven concrete slab (9) is performed with an appropriate device by mounting rubber washers (7). Marble baseboards (8) lean against the wall (10) and the covering (1). This construction gives sound and thermal insulation, eliminating levelling layer of concrete, installing a complete infrastructure in the area (11), and over the concrete slab (9). The construction time is shortened by at least 45 days.

(51) ***E 04 H 6/40*** (2006.01) **(11) 2009/0452**
(13) A
(21) P-2009/0452 (22) 20.10.2009.
(54) KONSTRUKCIJA GARAŽE ZA PUTNIČKE AUTOMOBILE NA POKRETNIM PLATFORMAMA
(71) IVANOVIĆ, Dragomir, Maršala Birjuzova 29, 11000 Beograd, RS; IVANOVIĆ, Nenad, Maršala Birjuzova 29, 11000 Beograd, RS
(72) IVANOVIĆ, Dragomir, Maršala Birjuzova 29, 11000 Beograd, RS; IVANOVIĆ, Nenad, Maršala Birjuzova 29, 11000 Beograd, RS
(57) Конструкција гараже за путничке аутомобиле на покретним платформама се састоји од платформе (6) у коју су уграђени делови ланца (2) и чине целину. Платформа (6) и ланци (2) су деловима (3) повезани у погонски ланац, који је монтиран на два ланчаника (1). Платформе (6) се тежином ослањају на ролне (4, 5). Ролне (4) су на правом делу путање погоњене синхроно са ланчаницима. Ролне (7) служе да воде платформе(6) на правом делу путање.

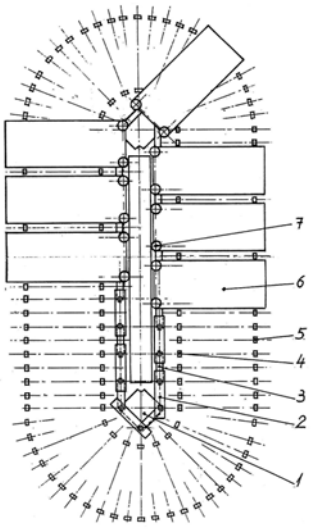

(54) GARAGE STRUCTURE FOR PASSENGER CARS ON MOVING PLATFORMS

(57) Invention herewith described refers to the garage structure for passenger cars on moving platforms consisting of a platform (6) on which are mounted parts of a chain (2) forming a unit. The platform (6) and the chains (2) are via the parts (3) connected into the drive chain mounted on two chain pulleys (1). The platforms (6) with their weight rest on the rolls (4, 5). The rolls are on the straight part of the path driven synchronously with the chain pulleys. The rolls (7) serve to guide the platforms (6) on the straight part of the path.

(51) ***E 06 B 3/263*** (2006.01) **(11) 2010/0055**
(13) A
(21) P-2010/0055 (22) 06.08.2008.
(30) EP 10.08.2007. 07015820.9
(86) WO 06.08.2008. PCT/EP2008/006464
(87) WO 19.02.2009. WO 2009/021662
(54) RAM KRILA ZA STAKLENI PROZOR ILI STAKLENA VRATA, OKVIR PROZORA I PROZORSKI SISTEM
(71) UNILUX AG, Nikolaus-Meeth-Strasse 1, 54528 Salmtal, DE
(72) KÖLZER, Stefan, Im Flürchen 1, 56865 Blankenrath, DE; MEETH, Alfred, Trevererstrasse 8, 54498 Piesport, DE
(74) JANKOVIĆ, D. Ivan i ost., Vlajkovićeva 28, 11000 Beograd, RS
(57) Ovaj pronalazak odnosi se na ram krila (1) za stakleni prozor ili staklena vrata, okvir prozora, i na jedan prozorski sistem koji sadrži ram krila i okvir prozora. Ram krila poseduje izolacioni sloj koji se nalazi između dva drvena profila (3, 4). Izolaciona konstrukcija se minimum sastoji od prvog izolacionog sloja (5), čija je glavna konstrukciona osobina čvrstoća, i još minimum drugog izolacionog sloja (6), čija je glavna konstrukciona osobina visoka toplotna izolacija. Između dva drvena profila (3, 4) je, pretežno vertikalno u odnosu na smer polaganja izolacionih slojeva izolacione konstrukcije, smešten jedan bočni izolacioni sloj koji ima visoku toplotnu izolaciju.

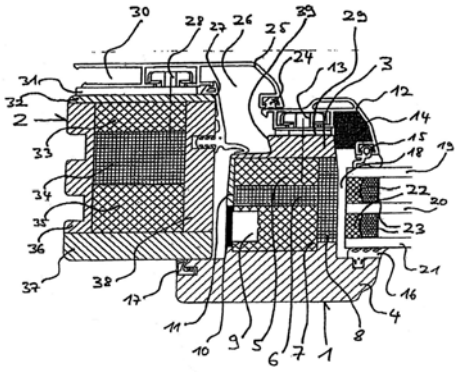

(54) SASH FRAME FOR GLASS WINDOW OR DOOR LEAF FRAME FOR GLASS DOOR, WINDOW FRAME AND WINDOW SYSTEM

(57) Invention herewith described refers to the sash frame (1) for glass windows or door leaf frame for glass doors, window frames, and a window system containing the sash frame and the window frame. The sash frame has an insulating layer applied between two wooden profiles (3, 4). The insulating structure is composed of at least the first insulation layer (5), whose main constructional feature is strength, and a minimum of another insulating layer (6), whose main constructional feature is the high thermal insulation. Between two wooden profiles (3, 4), there is, mostly perpendicular to the direction of laying of the insulating structure insulating layers, placed one side insulating layer that has a high thermal insulation.

(51) ***E 06 B 5/16*** (2006.01) **(11) 2010/0272**
E 05 F 15/20 (2006.01) **(13) A**
(21) P-2010/0272 (22) 12.11.2009.
(30) RS 12.11.2009. MP-2009/0087
(54) SPOLJNI PROTIVPOŽARNI PREGRAĐIVAČI ZA OBJEKTE VISOKE GRADNJE
(71) GLIGORIĆ, Gradimir, Bakal Milosava 27, 15300 Loznica, RS
(72) GLIGORIĆ, Gradimir, Bakal Milosava 27, 15300 Loznica, RS
(57) Спољни противпожарни преграђивачи за објекте високе градње припадају области заштите од пожара. Конкретно се односи на област уређаја са којима се зауставља ширење пожара. Овај поступак заштите од

пожара, остварује се посебним уређајем са којим се прекида зона пожара, продор пожара на слободан простор и улазак ваздуха у просторију која је захваћена пожаром. Ове функције рада остварују се преко уређаја са.којим се постављају противпожарне заштитне површине на спољне отворе просторије у којој је дошло до пожара. Овај уређај има своје делове који су фиксни и делове који се померају како би се обавила ова функција рада.

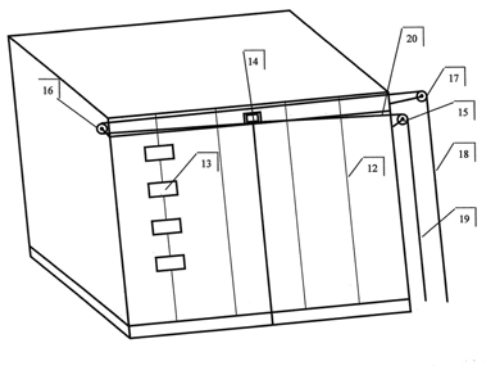

(54) EXTERNAL FIRE PREVENTION PARTITION WALLS FOR BUILDING CONSTRUCTION

(57) Invention herewith described refers to the external fire prevention partition walls for building construction, and belongs to the field of fire protection. It specifically refers to the field of devices for the fire spread prevention. This process of fire protection is accomplished with a special device that interrupts the fire zone, penetration of fire into an unprotected area and the entry of air into the room affected by the fire. These functions can be achieved through a device for setting fire protection surfaces on the external openings of the room where the fire occurred. This device has its fixed parts as well as movable parts for the purpose of performing this function.

(51) ***E 06 B 5/16*** (2006.01) **(11) 2010/0273**
E 05 F 15/20 (2006.01) **(13) A**
(21) P-2010/0273 (22) 12.11.2009.
(30) RS 12.11.2009. MP-2009/0088
(54) PROTIVPOŽARNI PREGRAĐIVAČI SA EKSPANDIRAJUĆIM ZAŠTITNIM POVRŠINAMA
(71) GLIGORIĆ, Gradimir, Bakal Milosava 27, 15300 Loznica, RS
(72) GLIGORIĆ, Gradimir, Bakal Milosava 27, 15300 Loznica, RS
(57) Противпожарни преграђивач са експандирајућим заштитним површинама припада области заштите од пожара. Конкретно се односи на област уређаја са којима се зауставља ширење пожара, овај поступак заштите од пожара остварује се посебним уређајем са којим се прекида зона пожара, продора пожара у незаштићен простор и улазак ваздуха у зону која се штити са овим уређајима. Основна функција рада овог уређаја заснива се на заштитним површинама које се састоје од носећих површина и икспандирајућих премаза са којима се штити објекат од ширења пожара. Ови уређаји у пожару се померају и затварају слободан простор и на тај начин остварују ову функцију рада.

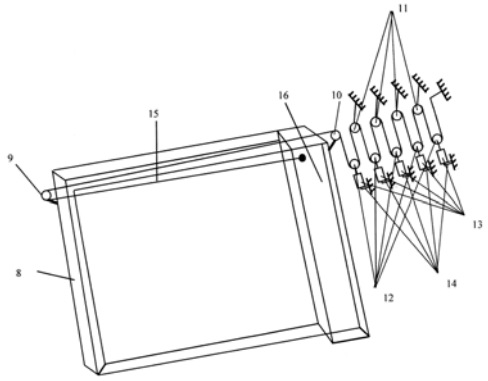

(54) FIRE PREVENTION PARTITION WALLS WITH EXPANDING PROTECTIVE SURFCES

(57) Invention herewith described refers to the fire prevention partition walls with the expanding protective surfces, belongs to the field of fire protection, and specifically refers to the field for the fire spread prevention. This process of fire protection is accomplished with a special device that interrupts the fire zone, penetration of fire products into an unprotected area and the entry of air into the zone protected with these devices. The main function of this device is based on the protective surfaces that consist of bearing surfaces and expanding coatings for protecting the building from the fire spreading. In a fire, these devices move, close a free area and thus perform their function.

(51) ***E 06 B 5/16*** (2006.01) **(11) 2010/0274**
E 05 F 15/20 (2006.01) **(13) A**
(21) P-2010/0274 (22) 12.11.2009.
(30) RS 12.11.2009. MP-2009/0089
(54) PROTIVPOŽARNI PROZORI SA EKSPANDIRAJUĆIM ZAŠTITNIM POVRŠINAMA
(71) GLIGORIĆ, Gradimir, Bakal Milosava 27, 15300 Loznica, RS
(72) GLIGORIĆ, Gradimir, Bakal Milosava 27, 15300 Loznica, RS
(57) Protivpožarni prozori sa ekspandirajućom zaštitnom površinom pripadaju oblasti zaštite od požara, konkretno se odnose na oblast uređaja sa kojima se zaustavlja širenje požara. Ovaj postupak zaštite od požara ostvaruje se posebnim uređajem sa kojim se prekida zona požara, prodora produkata požara u nezaštićen prostor i ulazak

vazduha u zonu koja se štiti sa ovim uređajem. Osnovna funkcija rada ovog uređaja zasniva se na zaštitnim površinama koje se sastoje od nosećih površina i ekspandirajućih premaza sa kojim se štiti objekat od širenja požara. Ovi prozori imaju urađene sisteme samozatvaranja što je od značaja za ovu funkciju rada.

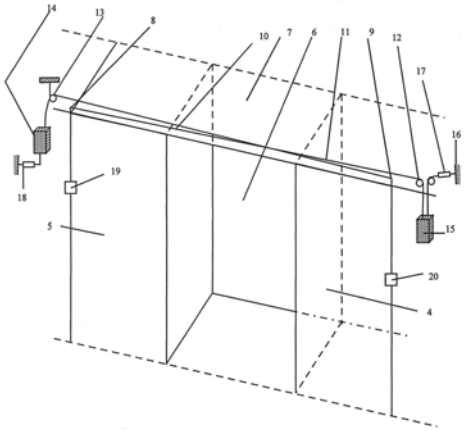

(54) FIRE PROTECTION WINDOWS WITH EXPANDING PROTECTIVE SURFACE

(57) Invention herewith described refers to the fire protection windows with the expanding protective surface, belongs to the field of fire protection, and specifically refers to the field for the fire spread prevention. This process of fire protection is accomplished with a special device that interrupts the fire zone, penetration of fire products into an unprotected area and the entry of air into the zone protected with this device. The main function of this device is based on the protective surfaces that consist of bearing surfaces and expanding coatings for protecting the building from the fire spreading. These doors have installed the self-closing system which is essential for this function.

(51) ***E 06 B 5/16*** (2006.01) **(11) 2010/0275**
E 05 F 15/20 (2006.01) **(13) A**
(21) P-2010/0275 (22) 12.11.2009.
(30) RS 12.11.2009. MP-2009/0090
(54) PROTIVPOŽARNA VRATA SA EKSPANDIRAJUĆIM ZAŠTITNIM POVRŠINAMA
(71) GLIGORIĆ, Gradimir, Bakal Milosava 27, 15300 Loznica, RS
(72) GLIGORIĆ, Gradimir, Bakal Milosava 27, 15300 Loznica, RS
(57) Protivpožama vrata sa ekspandirajućom zaštitnom površinom pripadaju oblasti zaštite od požara. Konkretno se odnose na oblast uređaja sa kojima se zaustavlja širenje požara. Ovaj postupak zaštite od požara ostvaruje se posebnim uređajem sa kojim se prekida zona požara, prodora produkata požara u nezaštićen prostor i ulazak vazduha u zonu koja se štiti sa ovim uređajem. Osnovna funkcija rada ovog uređaja zasniva se na zaštitnim površinama koje se sastoje od nosećih površina i ekspandirajućih premaza sa kojim se štiti objekat od širenja požara. Ova vrata imaju urađene sisteme samozatvaranja što je od značaja za ovu funkciju rada.

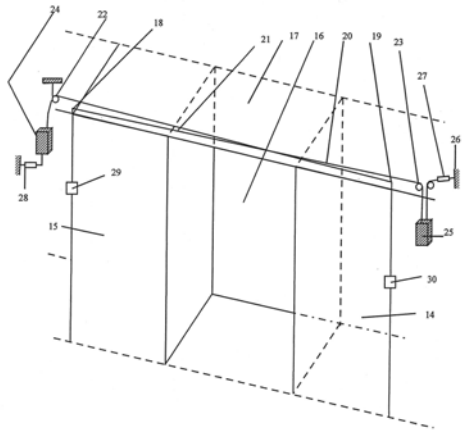

(54) FIRE PROTECTION DOORS WITH EXPANDING PROTECTIVE SURFACE

(57) Invention herewith described refers to the fire protection doors with the expanding protective surface and belongs to the field of fire protection. Specifically refers to the field of devices for fire spread prevention. This process of fire protection is accomplished with a special device that interrupts the fire zone, penetration of fire products into an unprotected area and the entry of air into the zone protected with this device. The main function of this device is based on the protective surfaces that consist of bearing surfaces and expanding coatings for protecting the building from the fire spreading. These doors have installed the self-closing system which is essential for this function.

(51) ***F 03 B 3/12*** (2006.01) **(11) 2009/0068**
(13) A
(21) P-2009/0068 (22) 12.02.2009.
(54) LOPATICA ZA ROTORE UOKVIRENIH HIDRO I AERO TURBINA
(71) PAUNOVIĆ, Nenad, Čačanska bb, Donja Vrežina, 18000 Niš, RS
(72) PAUNOVIĆ, Nenad, Čačanska bb, Donja Vrežina, 18000 Niš, RS
(57) Нов концепт лопатица (1) за уоквирене хидро и аеро турбине представља нов геометријски принцип облика лопатице за највећи степен искоришћења конверзије кинетичке енергије флуида код уоквирених турбина без обзира на брзину флуида. У односу на,

овоме, насличнији концепт комбиноване подизно-гурне лопатице гасне турбине својом смањеном површином горњег дела (3) лопатице омогућава бољи проток флуида кроз уоквирену турбину чиме се у односу на концепт лопатице гасних турбина примењених под истим условима (код уоквирених аеро и хидро турбине примењеним у отвореним системима - рекама, морима и океанима) постиже већа ефикасност конверзије енергије флуида преко лопатица турбина на ротор турбина нарочито код флуида са малим степеном стишљивости односно код течности.

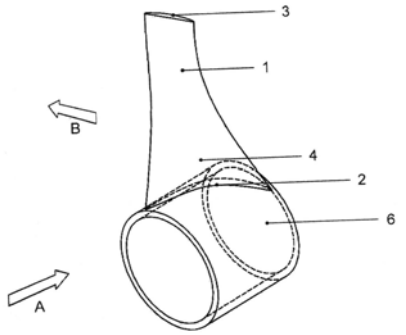

(54) ROTOR BLADE FOR FRAMED HYDRO AND AERO TURBINES

(57) Invention herewith described refers to the rotor blade for the framed hydro and aero turbines. The new concept of blades (1) for the framed hydro turbines and aero turbines represents a new geometric principle of the blade shape for the highest degree of utilization of the fluid kinetic energy conversion in the framed turbines regardless of the fluid speed. In relation to this, the most similar concept of combined lift-thrust gas turbine blades with their reduced surface area of the blade upper part (3) provides a better flow of the fluid through the framed turbine, whereby in relation to the concept of gas turbine blades applied under the same conditions (in framed aero and hydro turbines applied in open systems - rivers, seas and oceans) a greater efficiency of the fluid energy conversion is achieved through the turbine blades to the rotor of the turbines especially with fluids with a small degree of compressibility i.e. with liquids.

---

(51) ***F 03 D 9/00*** (2006.01) **(11) 2010/0428**
(13) A
(21) P-2010/0428 (22) 01.10.2010.
(54) AKUMULATOR KINETIČKE ENERGIJE VETRA
(71) MITROVIĆ, Miroslav, Vinogradski venac 19 st. 8, 11030 Beograd, RS
(72) MITROVIĆ, Miroslav, Vinogradski venac 19 st. 8, 11030 Beograd, RS

(57) Акумулација кинетичке енергије ветра почиње уласком било ког ветра из било ког правца, у усисник (29) пријемника (16), повећавајући својом енергијом притисак ваздуха у усиснику (29). Притисак ваздуха делује силом, кроз отвор (53) плоче (46), на плочу (54), одваја плочу (54) од заптивача (57) и кроз површину између плоче (54) и заптивача (57), улази у цев (41) кроз отвор (53) плоче (46), пролази отвор заптивача (15) и кроз отвор на зиду, који је исти као отвор (14) зида резервоара (13), улази у резервоар. Акумулација кинетичке енергије престаје када се сила притиска у резервоару и сила свих опруга (63), (67), (71), на површину плоче (54) која је једнака површини отвора (53) плоче (46), изједначи са силом коју ствара ветар на површини плоче (54) омеђеној отвором заптивача (57). Померање плоче (54) ограничено је осигурачима (62), (69), ради заштите опруга (63), (67), (71). Из резервоара акумулатора кинетичке енергије ветра одводи се кинетичка енергија ветра (трансформисана у потенцијалну енергију сабијеног ваздуха у резервоару) излазном цеви (4) и цевоводом до улазног отвора турбогенератора и резервоара постављених око акумулатора кинетичке енергије ваздуха.

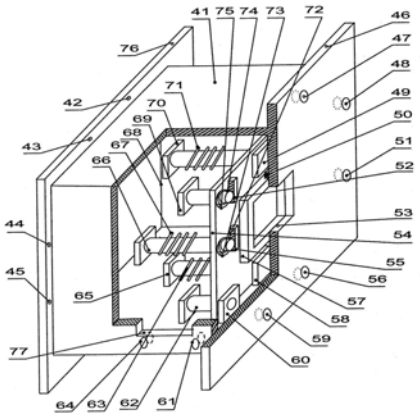

(54) KINETIC WIND ENERGY ACCUMULATOR

(57) Invention herewith described refers to the kinetic wind energy accumulator. The accumulation starts with the entrance of any wind from any direction into the intake (29) of the receiver (16), increasing with its energy air pressure in the intake (29). Air pressure exerts a force, through the hole (53) in the plate (46) on the plate (54), separates the plate (54) from the gasket (57) and through the surface between the plate (54) and the gasket (57), enters the pipe (41) through the hole (53) in the plate (46), goes through the opening of the gasket (15) and through the hole in the wall, which is the same as the opening (14) in the tank wall (13), enters the tank. The accumulation of kinetic energy stops when the force

of pressure in the tank and the force of all springs (63), (67), (71), on the surface (54) of the plate (54) equalize to the force generated by the wind on the surface of the plate (54) limited by the gasket hole (57). Shifting of the plate (54) is limited by the pins (62), (69) for the protection of springs (63), (67), (71). From the tank of the kinetic wind energy, the kinetic energy of wind (transformed into the potential energy of compressed air in the tank) is conveyed via outlet pipe (4) and the piping to the inlet opening of the turbo generator and the tank set around the kinetic air energy accumulator.

(51) ***F 24 H 1/20*** (2006.01) **(11) 2009/0337**
(13) A
(21) P-2009/0337 (22) 22.07.2009.
(54) BOJLER SA DVA GREJAČA
(71) SPASOVIĆ, Slobodan, Đoke Popovića 2, 32000 Čačak, RS
(72) SPASOVIĆ, Slobodan, Đoke Popovića 2, 32000 Čačak, RS
(74) DIMITRIJEVIĆ, Slobodan, Učitelja Miloša Jankovića 2a, 11000 Beograd, RS
(57) Проналазак се односи на бојлер са два грејача за загревање санитарне воде, код кога је у доњем делу казана (3) постављен грејач (7). У приближно горњој трећини казана (3) хотизонтално је постављен грејач (4) и паралелно са њим цев (5) за сонду термостата (Т). Између облоге (1) казана (3) постављена је цев (9) за електропроводнике који спајају грејаче (4, 7). Грејач (4), грејач (7) и сигнална лампа (С) паралелно су везани у коло са прекидачем (П), а са њима су редно везани термостат (Т) и термички осигурач (Т.Ос.).

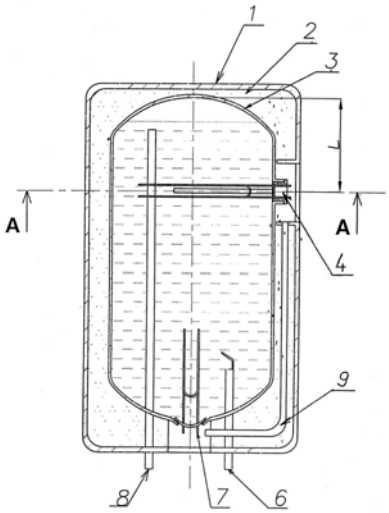

(54) WATER HEATER WITH TWO HEATING ELEMENTS

(57) Invention herewith described refers to the water heater with two heating elements for heating sanitary water containing, in the bottom part of the boiler (3), installed the heating element (7). At approximately the upper third of the boiler (3), the heating elements (4) are horizontally set and parallel to it the pipe (5) for the thermostat probe (T). Between the casing (1) of the boiler (3) there is mounted the tube (9) for electric conductors that connect the heating elements (4.7). The heating element (4) and the heating element (7) and the indicator light (S) are parallel connected into the circuit with the switch (P), and the thermostat (T) and the thermal fuse (T. Os) are connected to them in series.

(51) ***F 26 B 9/00*** (2006.01) **(11) 2009/0328**
A 23 N 12/08 (2006.01) **(13) A**
(21) P-2009/0328 (22) 16.07.2009.
(54) UNIVERZALNA SEKCIJSKA SUŠARA ZA DOMAĆINSTVO
(71) CEROVINA, Andrija, Katarine Bogdanović 19, 11030 Beograd, RS
(72) CEROVINA, Bojan, Katarine Bogdanović 19, 11030 Beograd, RS; CEROVINA, Andrija, Katarine Bogdanović 19, 11030 Beograd, RS
(57) Pronalazak, univerzalna sekcijska sušara za domaćinstvo je uređaj naročito primenjiv za poljoprivredno domaćinstvo, kao i biznis sušenim biljnim i prehrambenim proizvodima. Sekcijska izvedba i energetsko rešenje uz jednostavno posluživanje i prilagođavanje potrebama, su glavne prednosti i uz konkurentnu cenu na tržištu. U tehničkoj sekciji je smešten toplotni izvor na čvrsto gorivo i zajednički ventilator za cirkulaciju vazduha preko polica u jednoj ili više sekcija za sušenje proizvoda. Prema potrebi može se u sekcijama i policama vršiti i namensko podešavanje u skladu sa tehnološkim zahtevom sušenja, kao i montaža dupleks sušare sa vise sekcija.

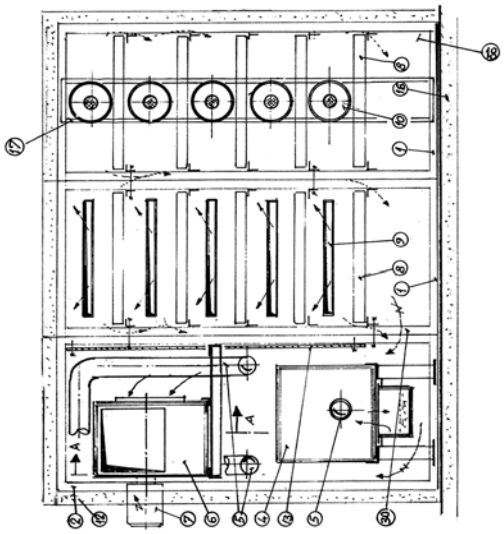

(54) UNIVERSAL SECTIONAL HOUSEHOLD DRYER

(57) Invention herewith described refers to the universal sectional household dryer particularly applicable for the farm household and in dried herb and dietary product

business. The sectional design and the energy solution with easy handling and adapting to the requirements are the main advantages as well as the competitive market price. In the technical section, there is mounted the heat source for solid fuel and the common fan to circulate air across the shelves in one or more sections for product drying. According to need, a predetermined adjustment can be performed in sections and shelves in accordance with the requirements of drying technology, as well as the assembling of the mounting duplex dryer with several sections.

---

(51) ***G 01 C 9/20*** (2006.01) **(11) 2009/0372**
G 01 C 9/24 (2006.01) **(13) A**
(21) P-2009/0372 (22) 21.08.2009.

(54) LIBELA SA ROTIRAJUĆIM CEVASTIM SUDOM ZA NIVELISANJE POVRŠINA POD SVIM NAGIBIMA

(71) GUTOVIĆ, Zoran, Orahova 13, 11221 Beograd, RS
(72) GUTOVIĆ, Zoran, Orahova 13, 11221 Beograd, RS

(57) Либела са ротирајућим цевастим судом за нивелацију површина под свим нагибима има покретни цевасти суд (1) конструкционо решен тако да може да ротира око једне непокретне тачке на својој подужној оси (9), а који је делимично испуњен течношћу (2) са малим мехуром (3) и фиксирану, угаоно-градуирану скалу (4) са које је могуће на основу положаја цевастог суда (1) када мали мехур (3) заузима његов средишњи положај, очитати угао нагиба нивелисане површине према референтној, најпрактичније водоравној равни, при чему је ротација цевастог суда (1) решива на разне начине: било непосредно, његовим стављањем у прстенасти жљеб (6) унутар кога може слободно да ротира, а који би могао бити са унутрашње стране угаоно-градуиране скале (4) било фиксирањем у прстенасти носач (5) са којим заједно може да ротира по жљебу (6а), или да има наставке (5ц) који му омогућавају лакшу ротацију по прстенастом жљебу (6) или да има носаче попут скзаљке на сату (5а) или попречно обухватне (5б) или другачије, тако да може да ротира око једне непокретне тачке захваљујући фиксираној осовини (11) или томе слично.

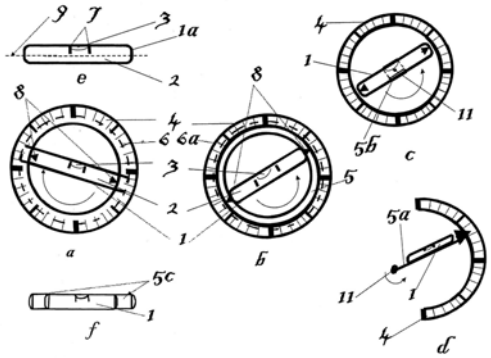

(54) SPIRIT LEVEL WITH ROTATING TUBULAR CONTAINER FOR SURFACE LEVELLING ON ALL INCLINES

(57) Invention herewith described refers to the spirit level with the rotating tubular container for surface levelling on all inclines includes the tubular container (1) designed so that it can rotate around a fixed point on its longitudinal axis (9), and is partially filled with liquid (2) with a small bubble (3) within the liquid and a fixed, angular-graduated scale (4) from which it is possible on the basis of the tubular container (1) position, when a small bubble (3) occupies its central position, to read the angle of the levelled surface incline toward the reference, the most practical horizontal plane, in which process the rotation of the tubular container (1) is solvable in many ways: either directly, by putting it into the ring groove (6) within which it is free to rotate, and which could be on the inside of the angle-graduated scale (4) or by its fixation into the support ring (5) and jointly rotation in the groove (6a), or to have extensions (5c) allowing easier rotation in the ring groove (6) or to have a carrier such as clock hands (5a) either transverse (5b) or different, so that it can rotate around a fixed point due to the fixed axle (11) or the like.

---

(51) ***G 01 R 35/00*** (2006.01) **(11) 2009/0066**
(13) A
(21) P-2009/0066 (22) 11.02.2009.

(54) METODA I SISTEM ZA AUTOMATSKO TESTIRANJE MULTIMEDIJALNIH UREĐAJA

(71) RT-RK, Fruškogorska 11a, 21000 Novi Sad, RS
(72) PEKOVIĆ, Vukota, Turgenjeva 9/263, 21000 Novi Sad, RS; ZLOH, Jan, Šturova 116, 26210 Kovačica, RS; TESLIĆ, Nikola, dr, Bulevar cara Lazara 29, 21000 Novi Sad, RS

(57) Proces verifikacije i testiranja uređaja ima važnu ulogu u procesu razvoja, proizvodnje i plasmana proizvoda na tržište. Metode testiranja koje se danas primenjuju u procesu verifikacije prevashodno se baziraju na ručnoj verifikaciji. Metodologija koja je predstavljena u ovom pronalasku omogućava automatizaciju procesa verifikacije i testiranja multimedijalnih uređaja i omogućava veću pouzdanost krajnjeg uređaja (isključivanjem ljudskog faktora iz procesa testiranja), smanjuje troškove u procesu proizvodnje (ubrzanjem procesa verifikacije i testiranja i kraćim vremenom plasmana proizvoda na tržište) i pruža mogućnost ponovnog korišćenja kreiranih verifikacionih procedura.

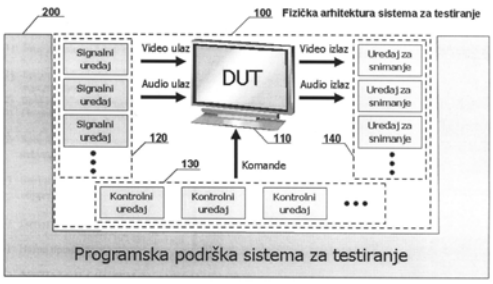

(54) METHOD AND SYSTEM FOR AUTOMATIC MULTIMEDIA DEVICE TESTING

(57) Invention herewith described refers to the device verification and test process that has an important part in the product development, production and marketing process. Test methods that are applied nowadays are mainlv based on manual verification. The methodologv presented in this invention facilitates the automation of verification and test processes of the multimedia devices as well as greater reliability of the final device (exclussion of the human factor from the testing process), reduces the production costs (by acceleration of the verification and test processes and the shorter time to market) and provides an opportunity to reuse the created verification procedures.

(51) ***G 06 Q 90/00*** (2006.01) **(11) 2009/0383**
G 08 B 29/00 (2006.01) **(13) A**
A 62 C 2/06 (2006.01)
G 05 B 19/406 (2006.01)
(21) P-2009/0383 (22) 27.08.2009.
(54) SISTEM ZA KONTROLU I UPRAVLJANJE PROTIVPOŽARNIM I DIMOODVODNIM KLAPNAMA I POSTUPAK ZA NJEGOVU PRIMENU
(71) TOMANOVIĆ, Uroš, Teodora Drajzera br. 4/9, 11000 Beograd, RS
(72) TOMANOVIĆ, Uroš, Teodora Drajzera br. 4/9, 11000 Beograd, RS
(74) VLAHOVIĆ, Slobodan, Radoja Dakića 35/32, 11070 Novi Beograd, RS
(57) Sistem za kontrolu i upravljanje protivpožarnim i dimoodvodnim klapnama i postupak za njegovu primenu pripada oblasti komunikacionih tehnologija primenjenih u protivpožaraoj zaštiti. Pronalaskom je rešena konstrukcija sistema za kontrolu i upravljanje protivpožarnim klapnama i klapnama za odimljavanje sa odgovarajućim protokolom koji omogućava efikasan i pouzdan rad projektovane hardverske strukture sistema.
Ovo je ostvareno tako što predmetni sistem čini kontrolna jedinica povezana sa optimalnim brojem perifernih jedinica koje omogućavaju kontrolu i upravljanje radom protivpožarnih klapni i klapni za odimljavanje. Sistem je baziran na primeni strukturne kružne magistrale tako da svaki kontroler aktuatora sa uređajem ispred i iza sebe komunicira po principu jedan na jedan, odnosno svaki transiver je povezan sa samo jednim transiverom na susednom uređaju. Rad ovog sistema omogućava protokol čije se funkcionisanje zasniva na propuštanju komande kroz periferne jedinice, a zatim menjanju stanja transivera diktirano poslednjim bajtom komande kako bi se omogućilo prosleđivanje odgovora adresirane periferne jedinice kontrolnoj.

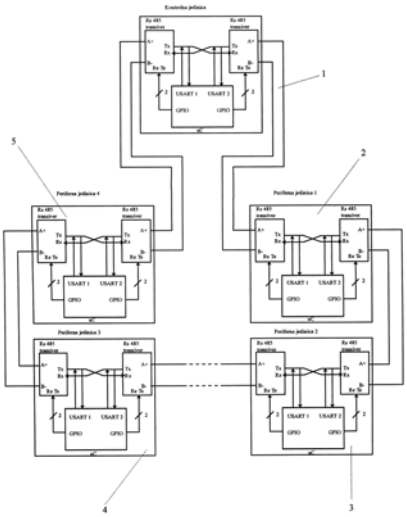

(54) CONTROL AND MANAGEMENT OF FIRE AND SMOKE FLAP SYSTEM AND THE SYSTEM APPLICATION PROCEDURE

(57) Invention herewith described refers to the control and management of fire and smoke flap system and the system application procedure and belongs to the field of communication technologies applied to fire protection. The invention determined the design of the system for the control and management of fire and smoke flaps with the corresponding protocol for efficient and reliable operation of the designed hardware system structure. This is achieved because the subject system contains the control unit connected with the optimal number of peripheral units that provide the control and management of fire and smoke flaps. The system is based on the application of the structural circular bus so that each actuator controller with the device, in front of and behind itself, communicates on a one to one principle i.e. each transceiver is connected to only one transceiver on a neighbouring device. The system operation allows the protocol whose functioning is based on the command by-passing through the peripheral units, and then changing conditions of the transceiver dictated by the last byte of the command in order to allow the forwarding of the addressed peripheral unit response to the control unit.

(51) ***H 01 R 11/03*** (2006.01) **(11) 2009/0382**
B 63 J 23/24 (2006.01) **(13) A**
(21) P-2009/0382 (22) 26.08.2009.
(54) DETEKTOR PRISUTNOSTI VOZAČA ZA VOLANOM GLISERA
(71) MILANOVIĆ, Milan, Petefijeva 39, 11000 Beograd, RS
(72) MILANOVIĆ, Milan, Petefijeva 39, 11000 Beograd, RS
(57) Uređaj se postavlja u radno stanje zajedno sa paljenjem motora glisera i u odnosu na postojeće proizvode minimalno opterećuje vozača. Koncepcija uređaja uslovljava vozača da dok je gliser u pokretu bude prisutan

za volanom čime se povećava bezbednost kako vozača tako i celokupna bezbednost u rečnom i morskom saobraćaju. Takođe u slučaju ispadanja vozača iz glisera prekida rad motora što dovodi do usporavanja elise motora glisera i njegovog zaustavljanja čime su povrede uzrokovane elisom motora znatno smanjene jer motor ugašen a elisa usporena. Time je omogućen i bezbedan povratak vozača u gliser. Varijantno rešenje predstavlja detektor prisutnosti vozača za volanom skutera koji se primenjuje na skuterima na vodi i ima istu ulogu kao i gore opisani detektor.

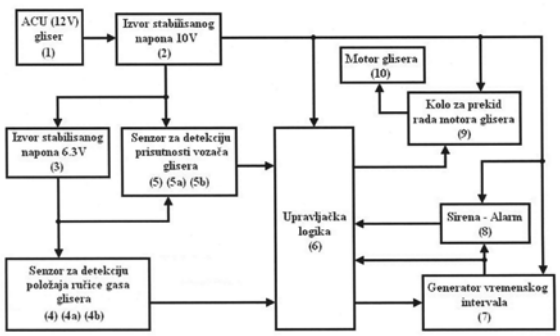

(54) DETECTOR OF THE DRIVER'S PRESENCE AT THE SPEEDBOAT STEERING WHEEL

(57) Invention herewith described refers to the detector of the driver's presence at the speedboat stering wheel. The device is activated at the ignition of the speedboat engine and in relation to the existing products; there is a minimum strain on the driver. The device concept engages the driver to be present at the wheel while the boat is in motion thereby increasing security of the driver as well as total river and sea transport security. If the speedboat driver falls out of the boat, the device turns off the engine thus slowing down and stopping the speedboat engine propeller which significantly reduces the number of injuries caused by an engine propeller because the engine is turned off and the propeller slowed down. This provides the safe driver's getting back into the boat. The variant solution is the detector of the driver's presence at jet ski steering wheel and has the same function as the above described detector.

---

(51) ***H 05 B 3/00*** (2006.01) **(11) 2010/0526**
(13) A
(21) P-2010/0526 (22) 03.12.2010.
(54) ELEKTRIČNI PLOČASTI I FOLIJSKI MIKROSLOJNI GREJAČ POVRŠINE BITNO POBOLJŠANIH PARAMETARA
(71) "SV LINE" D.O.O., Bulevar Mihaila Pupina 127/12, 11070 Novi Beograd, RS
(72) KRSTIĆ, Vlada, Bulevar Mihaila Pupina 127/12, 11070 Novi Beograd, RS; GAKOVIĆ, Stojan, Radovana Simića Cige 2, 11000 Beograd, RS
(57) Pronalazak se odnosi na električni pločasti i folijski mikroslojni grejač površine bitno poboljšanih elektrotermičkih i ekoloških parametara. Odabirom adekvatnih metalnih folija, odnosno njihovih strukturalnih fizičkih karakteristika, njihove geometrije, te odabirom tehnoloških postupaka obrade tih materijala, dobili smo da odnos aktivne površine grejača i pasivne površine koju treba zagrejati, bude praktično istovetan, odnosno da grejač transformiše električnu u toplotnu energiju sa maksimalno mogućim stepenom transformacije. Predmetnim pronalaskom rešen je problem eliminacije, po ljudsko zdravlje i ostale bioorganizme, štetnog i pogubnog elektromagnetnog polja, a dodavanjem još jedne folije, sa dvostrukim korisnim dejstvom, umanjili smo elektromagnetno polje, te dvostruko veći put struje grejača, odnosno nominalnu struju propuštenu kroz dvostruko veći presek elektroprovodne staze, te se produžava projektovam vek grejača.

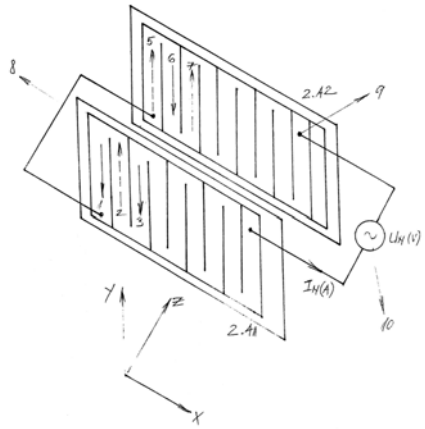

(54) ELECTRIC PLATE AND FOIL MICROLAYER SURFACE HEATER WITH SIGNIFICANTLY IMPROVED PARAMETERS

(57) Invention herewith described refers to the electric plate and foil micro layer surface heater with significantly improved electro thermal and environmental parameters. By selecting the appropriate metal foils i.e. their structural physical properties, their geometry, and choosing the technological methods of processing these materials, we obtained that the relation between the active heater surface and the passive heater surface that should be heated, is virtually identical, i.e. that the heater transforms electrical energy into the heat energy with the maximum possible degree of transformation. The subject invention solves the problem of elimination, to human health and other bio-organisms,

dangerous and harmful electromagnetic field, and by adding another foil, with a double beneficial effect, reduces the electromagnetic field, and doubles the heater current path, i.e. the nominal current passed through doubly cross-section of the current-conducting paths, and extends the projected life of the heater.

(51) ***H 05 B 3/00*** (2006.01) **(11) 2010/0542**
(13) A
(21) P-2010/0542 (22) 13.12.2010.

(54) ELEKTRIČNI MIKROSLOJNI GREJAČ TRANSPARENTNOG STAKLENOG RADIJATORA

(71) "SV LINE" D.O.O., Bulevar Mihaila Pupina 127/12, 11070 Novi Beograd, RS
(72) KRSTIĆ, Vlada, Bulevar Mihaila Pupina 127/12, 11070 Novi Beograd, RS; GAKOVIĆ, Stojan, Radovana Simića Cige 2, 11000 Beograd, RS

(57) Pronalazak se odnosi na električni mikroslojni grejač transparentnog staklenog radijatora. Predmetnim pronalaskom rešen je tehnički problem konstrukcije električnog mikroslojnog grejača, koji se odlikuje brzom, jednostavnom i ekonomičnom proizvodnjom, uz ostvarenu homogenizaciju temperaturnog polja po površini staklenog radijatora u cilju smanjenja termičkih opterećenja komponenti, te znatno povećanim faktorom pouzdanosti u radu. Ovo je ostavreno tako što se na cilindar (1), učvrsti termoplastična izolaciona podloga (3), montiraju se kratkospojnici (5) i (5.1), na rotirajući cilindar (1), vodilica mota elektrootpornu žicu (4), korakom (d), potom se strujnim impulsom preko tačaka (9) i (10) elektrootporna žica (4) zavari za termoplastičnu izolacionu podlogu (3).

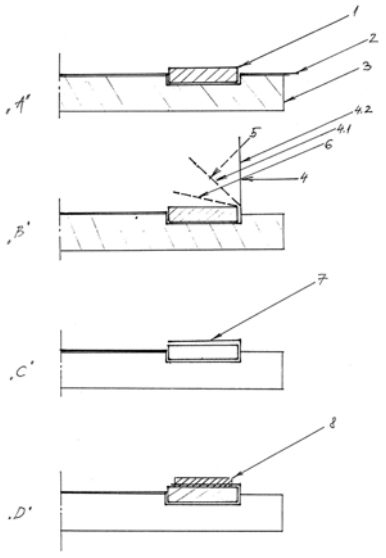

(54) ELECTRICAL MICRO LAYER HEATER OF TRANSPARENT GLASS RADIATOR

(57) Invention herewith described refers to the electrical micro layer heater of transparent glass radiator. The aforementioned invention solves the technical problem of the electrical micro layer heater design, which is characterized by a rapid, simple and cost-effective production, with an accomplished homogenization of the temperature field on the glass radiator surface with the aim of reducing the thermal loading of components, and significantly increasing the operational reliability factor.
This is accomplished as follows: to the cylinder (1) is fixed the thermoplastic insulation base (3), the jumpers (5) and (5.1) are mounted on the rotating cylinder (1) the winding guide winds the electric resistance wire (4) with the winding (d), then through the points (9) and (10) the electric resistance wire (4) is with the current impulse welded to the thermoplastic insulation base (3).

ИНДЕКСНЕ ТАБЕЛЕ ЗА ПРИЈАВЕ ПАТЕНАТА
INDEX TABLES FOR PATENT APPLICATIONS

- **ИНДЕКС ПОДНОСИЛАЦА ПРИЈАВА ПАТЕНАТА (стр. 1548)**
- APPLICANTS NAME INDEX (p. 1548)

- **ИНДЕКС БРОЈЕВА ПРИЈАВА ПАТЕНАТА (стр. 603)**
- APPLICATIONS NUMBER INDEX (p. 603)

- **ИНДЕКС ОБЈАВЉЕНИХ ПРИЈАВА ПАТЕНАТА ПРЕМА МКП (стр. 605)**
- INDEX OF PATENT APPLICATIONS ACCORDING TO IPC (p. 605)

ИНДЕКС ПОДНОСИЛАЦА ПРИЈАВА ПАТЕНАТА

APPLICANTS NAME INDEX

(71)	(51)	(21)
4SIGHT INNOVATION B.V.	***B 65 D 45/32*** (2006.01) ***B 65 D 51/16*** (2006.01) ***B 65 D 55/02*** (2006.01) ***B 65 D 55/06*** (2006.01)	P-2010/0095
APOGRAD, d.o.o.	***A 47 B 71/00*** (2006.01)	P-2009/0349
BAYER CROPSCIENCE AG	***A 01 N 41/10*** (2006.01) ***A 01 N 43/653*** (2006.01) ***A 01 N 43/90*** (2006.01) ***A 01 N 25/32*** (2006.01) ***A 01 P 13/02*** (2006.01)	P-2011/0061
BAYER CROPSCIENCE AG	***A 01 N 41/10*** (2006.01) ***A 01 N 43/56*** (2006.01.) ***A 01 N 43/80*** (2006.01) ***A 01 N 25/32*** (2006.01) ***A 01 P 13/02*** (2006.01)	P-2011/0062
BAYER CROPSCIENCE AG	***A 01 N 41/10*** (2006.01) ***A 01 N 57/20*** (2006.01) ***A 01 N 25/32*** (2006.01) ***A 01 P 13/02*** (2006.01)	P-2011/0063
BAYER CROPSCIENCE AG	***A 01 N 41/10*** (2006.01) ***A 01 N 47/36*** (2006.01) ***A 01 N 25/32*** (2006.01) ***A 01 P 13/02*** (2006.01)	P-2011/0064
BAYER CROPSCIENCE AG	***A 01 N 41/10*** (2006.01) ***A 01 N 47/36*** (2006.01) ***A 01 N 25/32*** (2006.01) ***A 01 P 13/02*** (2006.01)	P-2011/0065
BAYER CROPSCIENCE AG	***A 01 N 41/10*** (2006.01) ***A 01 N 37/34*** (2006.01) ***A 01 N 25/32*** (2006.01) ***A 01 P 13/02*** (2006.01)	P-2011/0066
BAYER CROPSCIENCE AG	***A 01 N 41/10*** (2006.01) ***A 01 N 43/70*** (2006.01) ***A 01 N 25/32*** (2006.01) ***A 01 P 13/02*** (2006.01)	P-2011/0067
BAYER CROPSCIENCE AG	***A 01 N 41/10*** (2006.01) ***A 01 N 37/40*** (2006.01) ***A 01 N 39/04*** (2006.01) ***A 01 N 43/40*** (2006.01) ***A 01 N 47/34*** (2006.01) ***A 01 N 25/32*** (2006.01) ***A 01 P 13/02*** (2006.01)	P-2011/0068

(71)	(51)	(21)
BAYER CROPSCIENCE AG	***A 01 N 41/10*** (2006.01) ***A 01 N 37/22*** (2006.01) ***A 01 N 37/26*** (2006.01) ***A 01 N 43/10*** (2006.01) ***A 01 N 43/78*** (2006.01) ***A 01 N 43/82*** (2006.01) ***A 01 N 25/32*** (2006.01) ***A 01 P 13/02*** (2006.01)	P-2011/0069
CEROVINA, Andrija	***F 26 B 9/00*** (2006.01) ***A 23 N 12/08*** (2006.01)	P-2009/0328
ĆOSIĆ, Slavko	***B 61 K 9/12*** (2006.01)	P-2009/0355
CTL-TH PACKAGING, S.L.UNIPERSONAL	***B 29 D 23/20*** (2006.01)	P-2010/0521
FIKSMER, Marjan and KRATOHVIL, Zlatko	***E 04 D 13/18*** (2006.01) ***E 04 D 1/08*** (2006.01) ***F 24 J 2/04*** (2008.04)	P-2010/0076
GLIGORIĆ, Gradimir	***E 06 B 5/16*** (2006.01) ***E 05 F 15/20*** (2006.01)	P-2010/0272
GLIGORIĆ, Gradimir	***E 06 B 5/16*** (2006.01) ***E 05 F 15/20*** (2006.01)	P-2010/0273
GLIGORIĆ, Gradimir	***E 06 B 5/16*** (2006.01) ***E 05 F 15/20*** (2006.01)	P-2010/0274
GLIGORIĆ, Gradimir	***E 06 B 5/16*** (2006.01) ***E 05 F 15/20*** (2006.01)	P-2010/0275
GUTOVIĆ, Zoran	***G 01 C 9/20*** (2006.01) ***G 01 C 9/24*** (2006.01)	P-2009/0372
IGIĆ, Aleksandar, prof. dr.; IGIĆ, Marko and IGIĆ, Stevan	***A 61 C 13/34*** (2006.01) ***A 61 C 13/38*** (2006.01)	P-2010/0342
IVANOVIĆ, Nenad and IVANOVIĆ, Dragomir	***E 04 H 6/40*** (2006.01)	P-2009/0452
KOSTIĆ, Marko	***A 01 C 23/02*** (2006.01) ***A 01 G 29/00*** (2006.01)	P-2010/0576
MERCK FROSST CANADA LTD.	***C 07 D 209/80*** (2006.01) ***A 61 K 31/403*** (2006.01) ***A 61 P 43/00*** (2006.01) ***C 07 D 209/88*** (2006.01)	P-2010/0338
MIČIĆ, Vladislav	***A 61 N 2/00*** (2006.01) ***A 61 N 2/06*** (2006.01) ***A 61 K 9/06*** (2006.01)	P-2009/0361
MILANOVIĆ, Milan	***H 01 R 11/03*** (2006.01) ***B 63 J 23/24*** (2006.01)	P-2009/0382
MILEKIĆ, Boriša	***B 08 B 9/04*** (2006.01) ***B 08 B 5/02*** (2006.01) ***B 08 B 9/32*** (2006.01)	P-2010/0024
MITROVIĆ, Miroslav	***F 03 D 9/00*** (2006.01)	P-2010/0428

(71)	(51)		(21)
MOMČILOVIĆ, Slobodan	***A 63 B 49/04***	(2006.01)	P-2009/0410
NIKOLOV, Dušan	***B 60 K 15/00***	(2006.01)	P-2009/0338
NIKŠIĆ, Stevo	***B 60 L 11/00***	(2006.01)	P-2010/0454
PAUNOVIĆ, Nenad	***F 03 B 3/12***	(2006.01)	P-2009/0068
PEŠOVIĆ, Vojin and PEŠOVIĆ, Predrag	***B 65 D 5/43***	(2006.01)	P-2009/0376
PEŠOVIĆ, Vojin and PEŠOVIĆ, Predrag	***B 01 F 3/04***	(2006.01)	P-2009/0447
	C 02 F 1/74	(2006.01)	
	C 02 F 7/00	(2006.01)	
PRAVDA, Ladislav	***E 03 C 1/02***	(2006.01)	P-2010/0212
RADIVOJEVIĆ, Mirko	***E 04 F 15/22***	(2006.01)	P-2009/0481
RADIVOJEVIĆ, Mirko	***E 04 F 15/00***	(2006.01)	P-2009/0482
RT-RK	***G 01 R 35/00***	(2006.01)	P-2009/0066
SPASOVIĆ, Slobodan	***F 24 H 1/20***	(2006.01)	P-2009/0337
SREDOJEVIĆ, Milan	***E 02 D 29/14***	(2006.01)	P-2010/0572
	E 03 F 5/02	(2006.01)	
	E 05 B 65/00	(2006.01)	
SV LINE D.O.O.	***H 05 B 3/00***	(2006.01)	P-2010/0526
SV LINE D.O.O.	***H 05 B 3/00***	(2006.01)	P-2010/0542
TEIJIN ARAMID B.V.	***B 29 C 55/00***	(2006.01)	P-2010/0052
	B 29 C 55/04	(2006.01)	
	B 29 K 23/00	(2006.01)	
TOMANOVIĆ, Uroš	***G 06 Q 90/00***	(2006.01)	P-2009/0383
	G 08 B 29/00	(2006.01)	
	A 62 C 2/06	(2006.01)	
	G 05 B 19/406	(2006.01)	
TRIČKOVIĆ, Kostadin S., prof. dr.	***A 61 H 9/00***	(2008.04)	P-2009/0330
	A 61 B 5/02	(2008.04)	
	A 61 G 10/02	(2008.04)	
UNILUX AG	***E 06 B 3/263***	(2006.01)	P-2010/0055
UNIVESITE DE LIEGE	***A 61 K 39/245***	(2006.01)	P-2010/0059
	C 12 N 7/04	(2006.01)	
	C 12 N 15/38	(2006.01)	
	C 12 N 15/85	(2006.01)	
	C 12 N 15/86	(2006.01)	
	A 61 K 39/205	(2006.01)	
VOJNOTEHNIČKI INSTITUT	***B 64 C 19/00***	(2008.04)	P-2009/0326
ZAGLIO, Sergio	***D 06 F 17/04***	(2006.01)	P-2010/0199
	D 06 F 18/00	(2006.01)	
	A 47 G 25/14	(2006.01)	
	D 06 F 58/10	(2006.01)	
	D 06 F 69/00	(2006.01)	
	D 06 F 73/00	(2006.01)	

ИНДЕКС БРОЈЕВА ПРИЈАВА ПАТЕНАТА

APPLICATIONS NUMBER INDEX

(21)	(51)	
P-2009/0066	***G 01 R 35/00***	(2006.01)
P-2009/0068	***F 03 B 3/12***	(2006.01)
P-2009/0326	***B 64 C 19/00***	(2008.04)
P-2009/0328	***F 26 B 9/00***	(2006.01)
	A 23 N 12/08	(2006.01)
P-2009/0330	***A 61 H 9/00***	(2008.04)
	A 61 B 5/02	(2008.04)
	A 61 G 10/02	(2008.04)
P-2009/0337	***F 24 H 1/20***	(2006.01)
P-2009/0338	***B 60 K 15/00***	(2006.01)
P-2009/0349	***A 47 B 71/00***	(2006.01)
P-2009/0355	***B 61 K 9/12***	(2006.01)
P-2009/0361	***A 61 N 2/00***	(2006.01)
	A 61 N 2/06	(2006.01)
	A 61 K 9/06	(2006.01)
P-2009/0372	***G 01 C 9/20***	(2006.01)
	G 01 C 9/24	(2006.01)
P-2009/0376	***B 65 D 5/43***	(2006.01)
P-2009/0382	***H 01 R 11/03***	(2006.01)
	B 63 J 23/24	(2006.01)
P-2009/0383	***G 06 Q 90/00***	(2006.01)
	G 08 B 29/00	(2006.01)
	A 62 C 2/06	(2006.01)
	G 05 B 19/406	(2006.01)
P-2009/0410	***A 63 B 49/04***	(2006.01)
P-2009/0447	***B 01 F 3/04***	(2006.01)
	C 02 F 1/74	(2006.01)
	C 02 F 7/00	(2006.01)
P-2009/0452	***E 04 H 6/40***	(2006.01)
P-2009/0481	***E 04 F 15/22***	(2006.01)
P-2009/0482	***E 04 F 15/00***	(2006.01)
P-2010/0024	***B 08 B 9/04***	(2006.01)
	B 08 B 5/02	(2006.01)
	B 08 B 9/32	(2006.01)

(21)	(51)	
P-2010/0052	***B 29 C 55/00***	(2006.01)
	B 29 C 55/04	(2006.01)
	B 29 K 23/00	(2006.01)
P-2010/0055	***E 06 B 3/263***	(2006.01)
P-2010/0059	***A 61 K 39/245***	(2006.01)
	C 12 N 7/04	(2006.01)
	C 12 N 15/38	(2006.01)
	C 12 N 15/85	(2006.01)
	C 12 N 15/86	(2006.01)
	A 61 K 39/205	(2006.01)
P-2010/0076	***E 04 D 13/18***	(2006.01)
	E 04 D 1/08	(2006.01)
	F 24 J 2/04	(2008.04)
P-2010/0095	***B 65 D 45/32***	(2006.01)
	B 65 D 51/16	(2006.01)
	B 65 D 55/02	(2006.01)
	B 65 D 55/06	(2006.01)
P-2010/0199	***D 06 F 17/04***	(2006.01)
	D 06 F 18/00	(2006.01)
	A 47 G 25/14	(2006.01)
	D 06 F 58/10	(2006.01)
	D 06 F 69/00	(2006.01)
	D 06 F 73/00	(2006.01)
P-2010/0212	***E 03 C 1/02***	(2006.01)
P-2010/0272	***E 06 B 5/16***	(2006.01)
	E 05 F 15/20	(2006.01)
P-2010/0273	***E 06 B 5/16***	(2006.01)
	E 05 F 15/20	(2006.01)
P-2010/0274	***E 06 B 5/16***	(2006.01)
	E 05 F 15/20	(2006.01)
P-2010/0275	***E 06 B 5/16***	(2006.01)
	E 05 F 15/20	(2006.01)
P-2010/0338	***C 07 D 209/80***	(2006.01)
	A 61 K 31/403	(2006.01)
	A 61 P 43/00	(2006.01)
	C 07 D 209/88	(2006.01)
P-2010/0342	***A 61 C 13/34***	(2006.01)
	A 61 C 13/38	(2006.01)
P-2010/0428	***F 03 D 9/00***	(2006.01)
P-2010/0454	***B 60 L 11/00***	(2006.01)

(21)	(51)
P-2010/0521	***B 29 D 23/20*** (2006.01)
P-2010/0526	***H 05 B 3/00*** (2006.01)
P-2010/0542	***H 05 B 3/00*** (2006.01)
P-2010/0572	***E 02 D 29/14*** (2006.01)
	E 03 F 5/02 (2006.01)
	E 05 B 65/00 (2006.01)
P-2010/0576	***A 01 C 23/02*** (2006.01)
	A 01 G 29/00 (2006.01)
P-2011/0061	***A 01 N 41/10*** (2006.01)
	A 01 N 43/653 (2006.01)
	A 01 N 43/90 (2006.01)
	A 01 N 25/32 (2006.01)
	A 01 P 13/02 (2006.01)
P-2011/0062	***A 01 N 41/10*** (2006.01)
	A 01 N 43/56 (2006.01)
	A 01 N 43/80 (2006.01)
	A 01 N 25/32 (2006.01)
	A 01 P 13/02 (2006.01)
P-2011/0063	***A 01 N 41/10*** (2006.01)
	A 01 N 57/20 (2006.01)
	A 01 N 25/32 (2006.01)
	A 01 P 13/02 (2006.01)
P-2011/0064	***A 01 N 41/10*** (2006.01)
	A 01 N 47/36 (2006.01)
	A 01 N 25/32 (2006.01)
	A 01 P 13/02 (2006.01)

(21)	(51)
P-2011/0065	***A 01 N 41/10*** (2006.01)
	A 01 N 47/36 (2006.01)
	A 01 N 25/32 (2006.01)
	A 01 P 13/02 (2006.01)
P-2011/0066	***A 01 N 41/10*** (2006.01)
	A 01 N 37/34 (2006.01)
	A 01 N 25/32 (2006.01)
	A 01 P 13/02 (2006.01)
P-2011/0067	***A 01 N 41/10*** (2006.01)
	A 01 N 43/70 (2006.01)
	A 01 N 25/32 (2006.01)
	A 01 P 13/02 (2006.01)
P-2011/0068	***A 01 N 41/10*** (2006.01)
	A 01 N 37/40 (2006.01)
	A 01 N 39/04 (2006.01)
	A 01 N 43/40 (2006.01)
	A 01 N 47/34 (2006.01)
	A 01 N 25/32 (2006.01)
	A 01 P 13/02 (2006.01)
P-2011/0069	***A 01 N 41/10*** (2006.01)
	A 01 N 37/22 (2006.01)
	A 01 N 37/26 (2006.01)
	A 01 N 43/10 (2006.01)
	A 01 N 43/78 (2006.01)
	A 01 N 43/82 (2006.01)
	A 01 N 25/32 (2006.01)
	A 01 P 13/02 (2006.01)

ИНДЕКС ОБЈАВЉЕНИХ ПРИЈАВА ПАТЕНАТА ПРЕМА МКП

INDEX OF PATENT APPLICATIONS ACCORDING TO IPC

(51)		(21)
A 01 G 29/00	(2006.01)	P-2010/576
A 01 N 25/32	(2006.01)	P-2011/61
A 01 N 25/32	(2006.01)	P-2011/62
A 01 N 25/32	(2006.01)	P-2011/63
A 01 N 25/32	(2006.01)	P-2011/64
A 01 N 25/32	(2006.01)	P-2011/65
A 01 N 25/32	(2006.01)	P-2011/66
A 01 N 25/32	(2006.01)	P-2011/67
A 01 N 25/32	(2006.01)	P-2011/68
A 01 N 25/32	(2006.01)	P-2011/69
A 01 N 37/22	(2006.01)	P-2011/69
A 01 N 37/26	(2006.01)	P-2011/69
A 01 N 37/34	(2006.01)	P-2011/66
A 01 N 37/40	(2006.01)	P-2011/68
A 01 N 39/04	(2006.01)	P-2011/68
A 01 N 41/10	(2006.01)	P-2011/61
A 01 N 41/10	(2006.01)	P-2011/62
A 01 N 41/10	(2006.01)	P-2011/63
A 01 N 41/10	(2006.01)	P-2011/64
A 01 N 41/10	(2006.01)	P-2011/65
A 01 N 41/10	(2006.01)	P-2011/66
A 01 N 41/10	(2006.01)	P-2011/67
A 01 N 41/10	(2006.01)	P-2011/68
A 01 N 41/10	(2006.01)	P-2011/69
A 01 N 43/10	(2006.01)	P-2011/69
A 01 N 43/40	(2006.01)	P-2011/68
A 01 N 43/56	(2006.01.)	P-2011/62
A 01 N 43/653	(2006.01)	P-2011/61
A 01 N 43/70	(2006.01)	P-2011/67

(51)		(21)
A 01 N 43/78	(2006.01)	P-2011/69
A 01 N 43/80	(2006.01)	P-2011/62
A 01 N 43/82	(2006.01)	P-2011/69
A 01 N 43/90	(2006.01)	P-2011/61
A 01 N 47/34	(2006.01)	P-2011/68
A 01 N 47/36	(2006.01)	P-2011/64
A 01 N 47/36	(2006.01)	P-2011/65
A 01 N 57/20	(2006.01)	P-2011/63
A 01 P 13/02	(2006.01)	P-2011/61
A 01 P 13/02	(2006.01)	P-2011/62
A 01 P 13/02	(2006.01)	P-2011/63
A 01 P 13/02	(2006.01)	P-2011/64
A 01 P 13/02	(2006.01)	P-2011/65
A 01 P 13/02	(2006.01)	P-2011/66
A 01 P 13/02	(2006.01)	P-2011/67
A 01 P 13/02	(2006.01)	P-2011/68
A 01 P 13/02	(2006.01)	P-2011/69
A 23 N 12/08	(2006.01)	P-2009/328
A 47 B 71/00	(2006.01)	P-2009/349
A 47 G 25/14	(2006.01)	P-2010/199
A 61 B 5/02	(2008.04)	P-2009/330
A 61 C 13/34	(2006.01)	P-2010/342
A 61 C 13/38	(2006.01)	P-2010/342
A 61 G 10/02	(2008.04)	P-2009/330
A 61 H 9/00	(2008.04)	P-2009/330
A 61 K 31/403	(2006.01)	P-2010/338
A 61 K 39/205	(2006.01)	P-2010/59
A 61 K 39/245	(2006.01)	P-2010/59
A 61 K 9/06	(2006.01)	P-2009/361

(51)		(21)
A 61 N 2/00	(2006.01)	P-2009/361
A 61 N 2/06	(2006.01)	P-2009/361
A 61 P 43/00	(2006.01)	P-2010/338
A 62 C 2/06	(2006.01)	P-2009/383
A 63 B 49/04	(2006.01)	P-2009/410
B 01 F 3/04	(2006.01)	P-2009/447
B 08 B 5/02	(2006.01)	P-2010/24
B 08 B 9/04	(2006.01)	P-2010/24
B 08 B 9/32	(2006.01)	P-2010/24
B 29 C 55/00	(2006.01)	P-2010/52
B 29 C 55/04	(2006.01)	P-2010/52
B 29 D 23/20	(2006.01)	P-2010/521
B 29 K 23/00	(2006.01)	P-2010/52
B 60 K 15/00	(2006.01)	P-2009/338
B 60 L 11/00	(2006.01)	P-2010/454
B 61 K 9/12	(2006.01)	P-2009/355
B 63 J 23/24	(2006.01)	P-2009/382
B 64 C 19/00	(2008.04)	P-2009/326
B 65 D 5/43	(2006.01)	P-2009/376
B 65 D 45/32	(2006.01)	P-2010/95
B 65 D 51/16	(2006.01)	P-2010/95
B 65 D 55/02	(2006.01)	P-2010/95
B 65 D 55/06	(2006.01)	P-2010/95
C 02 F 1/74	(2006.01)	P-2009/447
C 02 F 7/00	(2006.01)	P-2009/447
C 07 D 209/80	(2006.01)	P-2010/338
C 07 D 209/88	(2006.01)	P-2010/338
C 12 N 7/04	(2006.01)	P-2010/59
C 12 N 15/38	(2006.01)	P-2010/59
C 12 N 15/85	(2006.01)	P-2010/59
C 12 N 15/86	(2006.01)	P-2010/59
D 06 F 17/04	(2006.01)	P-2010/199
D 06 F 18/00	(2006.01)	P-2010/199
D 06 F 58/10	(2006.01)	P-2010/199

(51)		(21)
D 06 F 69/00	(2006.01)	P-2010/199
D 06 F 73/00	(2006.01)	P-2010/199
E 02 D 29/14	(2006.01)	P-2010/572
E 03 C 1/02	(2006.01)	P-2010/212
E 03 F 5/02	(2006.01)	P-2010/572
E 04 D 1/08	(2006.01)	P-2010/76
E 04 D 13/18	(2006.01)	P-2010/76
E 04 F 15/00	(2006.01)	P-2009/482
E 04 F 15/22	(2006.01)	P-2009/481
E 04 H 6/40	(2006.01)	P-2009/452
E 05 B 65/00	(2006.01)	P-2010/572
E 05 F 15/20	(2006.01)	P-2010/272
E 05 F 15/20	(2006.01)	P-2010/273
E 05 F 15/20	(2006.01)	P-2010/274
E 05 F 15/20	(2006.01)	P-2010/275
E 06 B 3/263	(2006.01)	P-2010/55
E 06 B 5/16	(2006.01)	P-2010/272
E 06 B 5/16	(2006.01)	P-2010/273
E 06 B 5/16	(2006.01)	P-2010/274
E 06 B 5/16	(2006.01)	P-2010/275
F 03 B 3/12	(2006.01)	P-2009/68
F 03 D 9/00	(2006.01)	P-2010/428
F 24 H 1/20	(2006.01)	P-2009/337
F 24 J 2/04	(2008.04)	P-2010/76
F 26 B 9/00	(2006.01)	P-2009/328
G 01 C 9/20	(2006.01)	P-2009/372
G 01 C 9/24	(2006.01)	P-2009/372
G 01 R 35/00	(2006.01)	P-2009/66
G 05 B 19/406	(2006.01)	P-2009/383
G 06 Q 90/00	(2006.01)	P-2009/383
G 08 B 29/00	(2006.01)	P-2009/383
H 01 R 11/03	(2006.01)	P-2009/382
H 05 B 3/00	(2006.01)	P-2010/526
H 05 B 3/00	(2006.01)	P-2010/542

РЕГИСТРОВАНИ ПАТЕНТИ

PATENTS GRANTED

(51) ***A 01 N 43/40*** (2006.01) **(11) 51504**
A 01 N 47/12 (2006.01) **(13) B**
(21) P-2003/0706 (22) 19.02.2002.
(43) 05.02.2007.
(30) FR 08.03.2001. 01/03141
(86) WO 19.02.2002. PCT/FR02/00621
(87) WO 12.09.2002. WO 02/069714 A1
(54) FUNGICIDNE KOMPOZICIJE NA BAZI DERIVATA PIRIDILMETILBENZAMIDA I PROPAMOKARBA
NOVEL FUNGICIDE COMPOSITIONS BASED ON PYRIDYLMETHYLBENZAMIDE AND PROPAMOCARB DERIVATIVE
(73) BAYER S.A.S., 16, rue Jean-Marie Leclair, 69009 Lyon, FR
(72) EMERY, Jane Catherine, Aventis CropScience UK Ltd. Intellectual Property Department, Fyfield Road, Ongar, Essex CM5 OHW, GB; RUSSEL, Philip Eric, Gog Magog House, 263A Hinton Way, Great Shelford, Cambridge CB2 5AN, GB; BARDSLEY, Richard Andrew, Aventis CropScience UK Ltd. Intellectual Property Department, Fyfield Road, Ongar, Essex CM5 OHW, GB; DANCER, Jane Elizabeth, 16 John Street, CB1 1DT Cambridge, GB; MERCER, Richard, 14, rue du Domaine, F-69130 Ecully, FR; HOLAH, David Stanley, 4 Greenend Farm Cottages, Sixmile Bottom Road, West Wratting, Cambridgeshire CB1 5NE, GB
(74) MIKIJELJ, Rade i ost., Vlajkovićeva 28, 11000 Beograd, RS
(57) Fungicidne kompozicije Fungicidne kompozicije, **naznačene time**, što obuhvataju:
a) najmanje jedan derivat piridilmetilbenzamida formule (I):u kojoj R^1 je izabran izmedju atoma vodonika, radikala alkila, eventualno supstituisanog i radikala acila eventualno supstituisanog: R^2 je izabran izmedju atoma vodonika i radikala alkila eventualno supstituisanog; R^3 i R^4 , identični ili različiti, su nezavisno izabrani izmedju atoma halogena, hidroksi radikala, cijano radikala, nitro radikala, SF_5 radikala, trialkilsilil radikala, amino radikala eventualno supstituisanog, radikala acila i grupe E, OE, ili SE gde je E izabrano izmedju radikala alkila, alkenila, alkinila, cikloalkila, cikloalkenila, arila i heterociklila, svaki od njih može da bude eventualno supstituisan; C predstavlja 0,1,2,3 ili 4; Q predstavlja 0,1,2,3 ili 4; kao i njihovi eventualni optički i/ili geometrijski izomeri, tautomeri i adicione soli kiseline ili baze, prihvatljive u oblasti poljoprivrede; I b) najmanje jedno jedinjenje (II) koje je propamokarb.
Prijava sadrži još 20 patentnih zahteva.

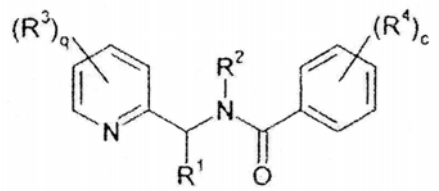

(I)

(51) ***A 43 B 7/08*** (2006.01) **(11) 51553**
A 43 B 7/12 (2006.01) **(13) B**
(21) P-2006/0034 (22) 15.07.2004.
(43) 07.08.2008.
(30) IT 22.07.2003. PD2003A000166
(86) WO 15.07.2004. PCT/EP2004/007894
(87) WO 10.02.2005. WO 2005/011417
(54) ĐON ZA CIPELE PROPUSTLJIV ZA VODENU PARU I NEPROPUSTLJIV ZA VODU, NAROČITO, ALI NE I ISKLJUČIVO ZA OTVORENE CIPELE KAO ŠTO SU SANDALE, NANULE I SLIČNO, I CIPELA IZRAĐENA SA TAKVIM ĐONOM
VAPOR-PERMEABLE AND WATERPROOF SOLE FOR SHOSE, PARTICULARLY BUT NOT EXCLUSIVELY FOR OPEN SHOESE SUCH AS SANDALS, SABOTS AND THE LIKE, AND SHOE PROVIDED WITH THE SOLE
(73) GEOX S.P.A., Via Feltrina Centro 16, I-31044 Montebelluna, Località Biadene (Treviso), IT
(72) POLEGATO MORETTI, Mario, Via Antonini, 7, I-31035 Crocetta del Montello, IT
(74) PAVLOVIĆ, Gordana i ost., Majke Jevrosime 53, 11000 Beograd, RS
(57) Đon za cipele, propustljiv za vodenu paru i nepropustljiv za vodu, naročito, ali ne i isključivo, za otvorene cipele kao što su sandale, nanule i slično, koji obuhvata sledeću kombinaciju elemenata:- donji element (11, 111, 211, 311), na kome se sa donje strane nalazi gazeći sloj (12, 112), pri čemu se navedeni donji element (11, 111, 211, 311) bira između jednog elementa koji je propustljiv za vodenu paru bar u jednom na gore usmerenom području i jednog perforiranog elementa, - jedan gornji, propustljiv za vodenu paru i/ili perforirani element (13, 113), - jedna membrana (16, 116, 216, 316), propustljiva za vodenu paru a nepropust- ljiva za vodu, umetnuta između navedenog donjeg elementa (11, 111, 211, 311) i pome-nutog gornjeg elementa (13, 113), pri čemu su navedena membrana i navedeni donji element (11, 111, 211, 311) i navedeni gornji element (13, 113) hermetički spojeni u ivičnim područjima međusobnog dodira, **naznačen time,** što navedeni gornji element (13, 113) obuhvata prvi sloj (13a) za dodir sa tabanom stopala, koji sloj odgovara tabanu, a načinjen je od za vodenu paru propustljivog i/ili perforiranog materijala, drugi sloj koji se sastoji od bar jednog komfornog sloja (14, 114) provodljivog za vodenu paru, postavljenog ispod navedenog prvog sloja (13a) i načinjenog od neke trodimenzionalne tkanine, tako da obrazuje procep (19, 119) za provetravanje, i treći sloj (20) koji je postavljen ispod navedenog komfornog sloja (14, 114) propustljivog za vodenu paru.
Prijava sadrži još 1 nezavisan i 18 zavisnih patentnih zahteva.

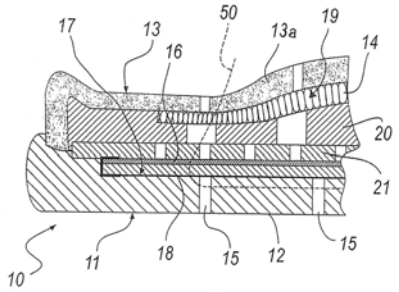

(51) ***A 43 B 7/12*** (2006.01) **(11) 51509**
A 43 B 13/16 (2006.01) **(13) B**
(21) P-2005/0232 (22) 18.09.2003.
(43) 15.12.2006.
(30) IT 24.09.2002. PD2002A000246
(86) WO 18.09.2003. PCT/EP03/010395
(87) WO 08.04.2004. WO 04/028284
(54) ĐON ZA CIPELE KOJI NE PROPUŠTA VODU A PROPUŠTA VODENU PARU I CIPELA IZRAĐENA SA TAKVIM ĐONOM
WATERPROOF AND BREATHABLE SOLE FOR SHOES AND SHOE MANUFACTURED WITH SUCH SOLE
(73) GEOX S.P.A., Via Feltrina Centro 16, I-31044 Montebeluna, Località Biadene (Treviso), IT
(72) POLEGATO MORETTI, Mario, Via Antonini, 7, I-31035 Crocetta del Montello, IT
(74) PAVLOVIĆ, Gordana i ost., Majke Jevrosime 53, 11000 Beograd, RS
(57) Đon za cipele, koji ne propušta vodu a propušta vodenu paru/'**naznačen time**, što ima strukturu koja obuhvata: - noseći sloj (10, 110) koji je, bar u unapred određenom makrodelu (11, 111) površine veličine reda bar jednog kvadratnog santimetra, načinjen od mreže, filca ili drugog difuzno perforiranog materijala, - membranu (13, 113) izrađenu od materijala koji je nepropustljiv za vodu a propustljiv za vodenu paru i koji je spojen iznad navedenog nosećeg sloja (10, 110) bar u navedenom bar jednom unapred određenom makrodelu (11, 111) načinjenom od mreže, filca ili drugog difuzno perforiranog materijala, koji pokriva, - gazeći sloj (15, 115) načinjen od plastičnog materijala sa bar jednom makroperforacijom (16, 116) položenom na navedenom bar jednom unapred određenom makrodelu (11, 111) načinjenom od mreže, filca ili drugog difuzno perforiranog materijala, pri čemu je na navedenoj bar jednoj makroperforaciji (16, 116) navedeni noseći sloj (10, 110) postavljen ka spoljnoj strani navedenog gazećeg sloja (15, 115) u navedenom bar jednom unapred određenom makrodelu (11, 111) površine veličine reda bar jednog kvadratnog santimetra, pri čemu je navedena bar jedna makroperforacija (16, 116) premošćena poprečnim elementima (16a); pri čemu je navedeni gazeći sloj (15, 115) hermetički spojen sa navedenom membranom (13, 113) i sa navedenim nosećim slojem (10, 110) bar po ivici navedenog bar jednog makrodela (11, 111) načinjenog od mreže, filca ili drugog difuzno perforiranog materijala.
Prijava sadrži još 1 nezavisan i 14 zavisnih patentnih zahteva.

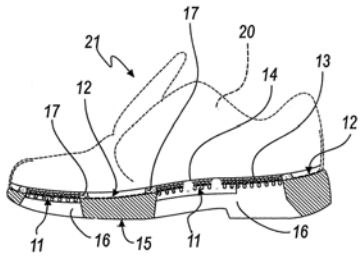

(51) ***A 43 B 7/12*** (2006.01) **(11) 51510**
(13) B
(21) P-2005/0282 (22) 13.10.2003.
(43) 05.02.2007.
(30) IT 15.10.2002. PD2002A000264
(86) WO 13.10.2003. PCT/EP03/011307
(87) WO 29.04.2004. WO 04/034830
(54) ĐON ZA CIPELE KOJI NE PROPUŠTA VODU A PROPUŠTA VODENU PARU I POSTUPAK ZA NJEGOVU PROIZVODNJU
WATERPROOFED AND BREATHABLE SOLE FOR SHOES AND MANUFACTURING METHOD THEREOF
(73) GEOX S.P.A., Via Feltrina Centro 16, I-31044 Montebeluna, Località Biadene (Treviso), IT
(72) POLEGATO MORETTI, Mario, Via Antonini, 7, I-31035 Crocetta del Montello, IT; FERRARESE, Antonio, Via Rimembranza 23, I-37063 Isola della Scala, IT
(74) PAVLOVIĆ, Gordana i ost., Majke Jevrosime 53, 11000 Beograd, RS
(57) Đon (10), nepropustljiv za vodu a propustljiv za vodenu paru/za cipele, koji obuhvata gazeći sloj (11) izrađen od kože ili sličnog materijala koji propušta vodenu paru i vodu, koji je sa gornje strane bar delimično pokriven membranom (12) izrađenom od materijala koji propušta vodenu paru a ne propušta vodu, pri čemu je navedena membrana (12) po ivici spojena sa gazećim slojem (11), **naznačen time**, što je navedena membrana (12) spojena sa gazećim slojem pomoću zaptivnog prstena (14) načinjenog od rastvora ili disperzije polimera koja ima suvi ostatak od najmanje 60 mas.% sa dodatkom sredstava za stvrdnjavanje.
Prijava sadrži još 1 nezavisan i 18 zavisnih patentnih zahteva.

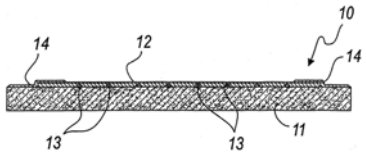

(51) ***A 61 K 9/00*** (2006.01) **(11) 51532**
A 61 K 31/4164 (2006.01) **(13) B**
A 61 K 31/19 (2006.01)
(21) P-2010/0474 (22) 07.11.2006.
(30) IT 10.11.2005. RM20050561
(96) 07.11.2006. 06123574.3
(97) 18.08.2010. EP1787644B 2010/33 EN
(54) OTOLOŠKI RASTVOR I POSTUPAK ZA NJEGOVU PRIPREMU
OTOLOGICAL SOLUTION AND METHOD FOR ITS PREPARATION
(73) D.M.G. ITALIA SRL, Via Laurentina Km 26, 700, 00040 Pomezia (RM), IT
(72) MERCURI, Luigi, D.M.G. ITALIA Srl Via Laurentiva, km 26.700, I-00040 Pomezia (RM), IT
(74) PETOŠEVIĆ DOO, Vele Nigrinove 16a, 11000 Beograd, RS
(57) Antimikotički i antispirogeni preparat u vidu jasnog i providnog rastvora, koji sadrži klimbazol i sirćetnu kiselinu, za upotrebu u lečenju brojnih oblika iritacije slušnog aparata izazvanih mikozama i/ili alergijskim razlozima.
Prijava sadrži još 9 zavisnih patentnih zahteva.

---

(51) ***A 61 K 9/20*** (2006.01) **(11) 51527**
A 61 K 31/428 (2006.01) **(13) B**
A 61 K 9/00 (2006.01)
A 61 K 31/4745 (2006.01)
(21) P-2010/0557 (22) 25.07.2005.
(30) EP 13.08.2004. 04019248
(86) WO 25.07.2005. PCT/EP2005/053602
(87) WO 16.02.2006. WO 2006/015942
(96) 25.07.2005. 05777774.0
(97) 03.11.2010. EP1781260B 2010/44 EN
(54) TABLETNA FORMULACIJA SA PRODUŽENIM OTPUŠTANJEM KOJA SADRŽI PRAMIPEKSOL ILI NJEGOVU FARMACEUTSKI PRIHVATLJIVU SO, POSTUPAK ZA PROIZVODNJU ISTE I NJENA PRIMENA
EXTENDED RELEASE TABLET FORMULATION CONTAINING PRAMIPEXOLE OR A PHARMA-CEUTICALLY ACCEPTABLE SALT THEREOF, METHOD FOR MANUFACTURING THE SAME AND USE THEREOF
(73) BOEHRINGER INGELHEIM INTERNATIONAL GMBH, Binger Strasse 173, 55216 Ingelheim am Rhein, DE
(72) FRIEDL, Thomas, Hans-Liebherr-Str. 48/4, 88416 Ochsenhausen, DE; EISENREICH, Wolfram, Kirchstrasse 16/1, 89081 Ulm, DE
(74) PLAVŠA, Drago i ost., Strumička 51, 11050 Beograd, RS
(57) Tabletna formulacija sa produženim otpuštanjem obuhvata pramipeksol ili njegovu farmaceutski prihvatljivu so u matriksu koji sadrži bar dva polimera koji bubre u vodi, osim preželatinizovanog škroba, i pri čemu bar jedan od dva polimera je anjonski polimer.
Prijava sadrži još 13 zavisnih patentna zahteva.

(51) ***A 61 K 9/22*** (2006.01) **(11) 51507**
A 61 K 31/722 (2006.01) **(13) B**
A 61 P 3/12 (2006.01)
A 61 P 7/00 (2006.01)
A 61 K 31/785 (2006.01)
A 61 K 33/08 (2006.01)
A 61 P 13/12 (2006.01)
(21) P-2010/0513 (22) 29.11.2005.
(30) IT 07.12.2004. ME20040015
(86) WO 29.11.2005. PCT/EP2005/056289
(87) WO 15.06.2006. WO 2006/061336
(96) 29.11.2005. 05810997.6
(97) 15.09.2010. EP1827386B 2010/37 EN
(54) ORALNE KOMPOZICIJE ZA APSORPCIJU FOSFORNIH JEDINJENJA
ORAL COMPOSITIONS FOR ABSORPTION OF PHOSPHORUS COMPOUNDS
(73) CM&D, Pharma Limited, Thames House Portsmouth Road Esher, Surrey KT10 9AD, GB
(72) SAVICA, Vincenzo, viale San Martino is 78, Messina, IT
(74) ŽIVKO MIJATOVIĆ & PARTNERS, Takovska 58, 11000 Beograd, RS
(57) Oralna kompozicija za kontinualno sporo oslobađanje koja sadrži agens za vezivanje fosfora i najmanje jedan farmaceutski prihvatljivi nosač i/ili ekscipijens, pri čemu je pomenuti agens za vezivanje fosfora izabran iz grupe koja se sastoji od polimera za vezivanje fosfata, farmaceutski prihvatljive soli lantana, farmaceutski prihvatljive soli magnezijuma, farmaceutski prihvatljive soli kalcijuma, farmaceutski prihvatljive anjonske jonoizmenjivačke smole i polisaharida za vezivanje fosfora, za primenu u lečenju hiperfosfatemije tokom perioda uzdržavanja od hrane, pri čemu se kompozicija drži u ustima sve dok se ne potroši agens za vezivanje fosfora.
Prijava sadrži još 14 zavisnih patentnih zahteva.

---

(51) ***A 61 K 31/00*** (2006.01) **(11) 51519**
A 61 K 31/519 (2006.01) **(13) B**
A 61 K 31/517 (2006.01)
A 61 P 9/10 (2006.01)
(21) P-2010/0523 (22) 04.08.2005.
(30) US 04.08.2004. 598432P
(96) 04.08.2005. 08153077.6
(97) 13.10.2010. EP1949893B 2010/41 EN
(54) DERIVATI HINAZOLINA KORISNI ZA TRETMAN PERIFERNE ARTERIJSKE BOLESTI I KAO INHIBITORI FOSFODIESTERAZE
QUINAZOLINE DERIVATIVES USEFUL FOR THE TREATMENT OF PERIPHERAL ARTERIAL DISEASE AND AS PHOSPHODIESTERASE INHIBITORS
(73) SHIRE BIOPHARMACEUTICALS HOLDINGS IRELAND LIMITED, 22 Grenville Street, St Helier JE4 8PX, Jersey, GB
(72) FRANKLIN, Richard, 3 Rosedene Gardens Fleet, Fleet, Hampshire GU51 4NQ, GB

(74) JANKOVIĆ, Ivan i ost., Vlajkovićeva 28, 11000 Beograd, RS

(57) Jedinjenje formule njegov uravnoteženi oblik, neka farmaceutski prihvatljiva so ovog jedinjenja ili njegovog uravnoteženog oblika, gde, R1 predstavlja H, C_{1-6} alkil, C_{2-6} alkenil, C_{2-8} alkinil, C_{1-6} alkoksi, ili C_{6-10} aril; R2 predstavlja R3 predstavlja OH, halogen, SH, O-C_{1-6} alkil ili NH_2; i X i Y svaki nezavisno, predstavlja H ili halogen, za uporebu kod povišenih sadržaja lipoproteina visoke gustine i apolipoproteina u plazmi, ili za upotrebu u tretmanu periferne arterijske bolesti, ateroskleroze, povremenog hramanja, kongestivne srčane smetnje, neke bolesti povezane povišenom agregacijom pločica, tromboze, moždanog udara ili seksualne disfunkcije.

Prijava sadrži još 15 zavisnih patentnih zahteva.

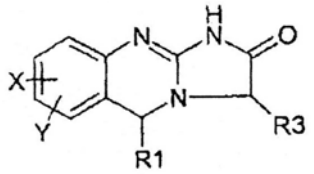

(I)

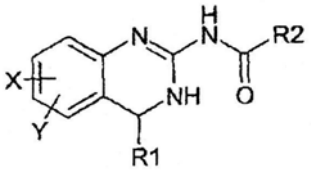

(II)

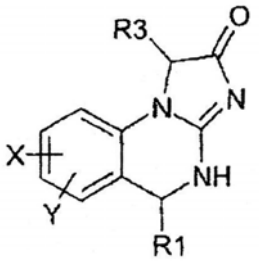

(III)

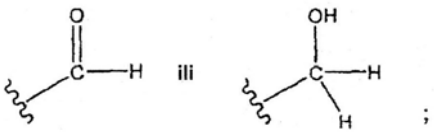

(51) ***A 61 K 31/095*** (2006.01) **(11) 51529**
A 61 K 31/01 (2006.01) **(13) B**
A 61 K 31/13 (2006.01)
A 61 P 31/18 (2006.01)

(21) P-2005/0823 (22) 02.11.2005.
(43) 10.04.2007.
(30) YU 02.11.2005. P-823/05

(54) PRIMENA METENAMINHIDRORODANIDA ZA PROIZVODNJU LEKOVA PROTIV RNK VIRUSA

USE OF METHENAMINHYDRORHODANIDE FOR PRODUCTION OF DRUGS AGAINST RNA VIRUSES

(73) SAVIĆ, Ivica, Norvežanska 22, 16000 Leskovac, RS

(72) ne želi da bude naveden

(74) MADŽARAC-SAVIĆ, Dragana, Norvežanska 22, 16000 Leskovac, RS

(57) Примена метенаминхидророданида за производњу лекова за лечење синдрома стечене имунодефицијенције.

---

(51) ***A 61 K 31/13*** (2006.01) **(11) 51540**
A 61 P 25/28 (2006.01) **(13) B**
A 61 K 45/06 (2006.01)

(21) P-2010/0561 (22) 05.01.2005.
(30) US 05.01.2004. 534553P
US 04.02.2004. 542176P
(86) WO 05.01.2006. PCT/US2005/000145
(87) WO 28.07.2005. WO 2005/067908
(96) 05.01.2005. 05711256.7
(97) 03.11.2010. EP1703902B 2010/44 EN

(54) MEMANTIN ZA LEČENJE BLAGE DO UMERENE ALZHAJMEROVE BOLESTI

MEMANTINE FOR THE TREATMENT OF MILD-TO-MODERATE ALZHEIMER'S DISEASE

(73) MERZ PHARMA GMBH & CO. KGAA, Eckenheimer Landstrasse 100, 60318 Frankfurt, DE

(72) MCDONALD, Scott, 84 Coleman Avenue, Chathem, NJ 07928, US; GERGEL, Ivan, 1450 Eaves Spring Road, Malvern, PA 19355, US; STÖFFLER, Albrecht, Sophienstrasse 58, D-60487 Frankfurt am Main, DE; MOEBIUS, Hans-Joerg, Im Trutz Frankfurt 13, 60322 Frankfurt am Main, DE; WIRTH, Yvonne, Unterer Eichweg 26, D-35041 Marburg, DE; POTKIN, Steven, 30 Urey, Irvine, CA 92617-4045, US

(74) JANKOVIĆ, Ivan i ost., Vlajkovićeva 28, 11000 Beograd, RS

(57) Upotreba memantina ili njegove farmaceutski prihvatljive soli u proizvodnji leka za monoterapijsko lečenje blage do umerene Alzhajmerove bolesti, pri čemu je lek proizveden za davanje memantina pri početnoj dozi od 5 mg /dnevno nedeljno povećavanoj po 5 mg/dnevno do krajnje doze od 20 mg/danu.

Prijava sadrži još 5 zavisnih patentnih zahteva.

(51) ***A 61 K 31/352*** (2006.01) **(11) 51521**
A 61 K 31/357 (2006.01) **(13) B**
A 61 P 3/10 (2006.01)
A 61 K 31/353 (2006.01)
A 61 P 3/06 (2006.01)
(21) P-2010/0530 (22) 19.12.2006.
(30) US 19.12.2005. 751677P
US 18.12.2006. 611961
(86) WO 19.12.2006. PCT/US2006/048477
(87) WO 16.08.2007. WO 2007/092086
(96) 19.12.2006. 06849983.9
(97) 03.11.2010. EP1973541B 2010/44 EN

(54) UPOTREBA DERIVATA BENZO-FUZIONISANOG HETEROCIKLIČNOG SULFAMIDA ZA SNIŽAVANJE LIPIDA I SADRŽAJA GLUKOZE U KRVI

USE OF BENZO-FUSED HETEROCYCLE SULFAMIDE DERIVATIVES FOR LOWERING LIPIDS AND LOWERING BLOOD GLUCOSE LEVELS

(73) JANSSEN PHARMACEUTICA N.V., Turnhoutseweg 30, 2340 Beerse, BE

(72) SMITH-SWINTOSKY, Virginia, L., 3163 Line Lexington Road, Hatfield, Pennsylvania 19440, US; REITZ, Allen, B., 109 Greenbriar Road, Lansdale, Pennsylvania 19446, US

(74) JANKOVIĆ, D. Ivan i ost., Vlajkovićeva 28, 11000 Beograd, RS

(57) Jedinjenje formule (I) ili njegova farmaceutski prihvatljiva so, za upotrebu u tretmanu nekog poremećaja koga karakterišu povećani sadržaji glukoze, gde se: R^1 i R^2 svaki nezavisno, biraju iz grupe koju čine vodonik i niži alkil; R^4 se bira iz grupe koju čine vodonik i niži alkil; a je ceo broj od 1 do 2; se bira iz grupe koju čine gde b predstavlja ceo broj od 0 do 4; i gde c predstavlja ceo broj od 0 do 2; a svaki R^5 se nezavisno bira iz grupe koju čine halogen, niži alkil i nitro; pod uslovom, da kada predstavlja da je tada a jednako 1, pri čemu se niži alkil odnosi na niz ugljeničnog lanca sa 1-4 atoma ugljenika.

Prijava sadrži još 12 zavisnih patentnih zahteva.

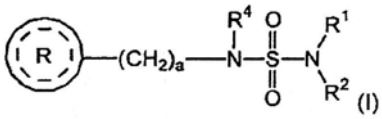

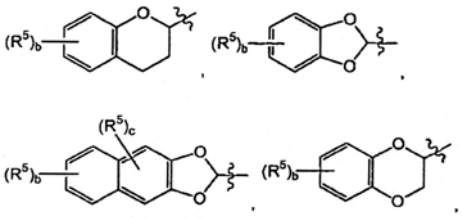

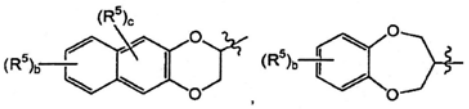

i

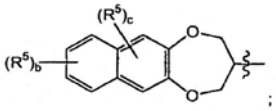

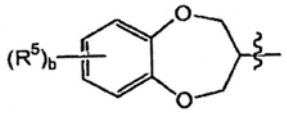

ili

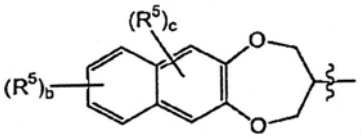

---

(51) ***A 61 K 31/495*** (2006.01) **(11) 51560**
A 61 P 25/04 (2006.01) **(13) B**
A 61 P 25/26 (2006.01)
A 61 P 25/22 (2006.01)
C 07 D 295/08 (2006.01)
A 61 P 25/24 (2006.01)
A 61 P 25/28 (2006.01)
(21) P-2011/0027 (22) 14.03.2008.
(30) DK 20.03.2007. 200700427
DK 15.06.2007. PCT/2007/50075
(86) WO 14.03.2008. PCT/DK2008/050063
(87) WO 25.09.2008. WO 2008/113359
(96) 14.03.2008. 08715617.0
(97) 19.01.2011. EP2142193B 2011/03 EN

(54) 1-[2-(2, 4-DIMETILFENILSULFANIL)FENIL] PIPERAZIN KAO JEDINJENJE SA KOMBINOVANOM AKTIVNOŠĆU VEZANOM ZA PONOVNO PREUZIMANJE SEROTONINA I 5-HT3 I 5HT1A AKTIVNOŠĆU, ZA LEČENJE BOLA ILI REZIDUALNIH SIMPTOMA U DEPRESIJI VEZANIH ZA SAN I KOGNICIJU

1-[2-(2, 4-DIMETHYLPHENYLSULFANYL)PHENYL] PIPERAZINE AS A COMPOUND WITH COMBINED SEROTONIN REUPTAKE, 5-HT3 AND 5-HT1A ACTIVITY FOR THE TREATMENT OF PAIN OR RESIDUAL SYMPTOMS IN DEPRESSION RELATING TO SLEEP AND COGNITION

(73) H. LUNDBECK A/S, 9 Ottiliavej, 2500 Valby, Copenhagen, DK
(72) MOORE, Nicholas, 441 George St Ridgewood, New Jersey 07450, US; STENSBØL, Tine, Bryan, Evavej 21, DK-3500 Værløse, DK
(74) ŽIVKO MIJATOVIĆ & PARTNERS, Takovska 58, 11000 Beograd, RS
(57) l-[2-(2, 4-dimetilfenilsulfanil)fenil]piperazin i njegove farmaceutski prihvatljive kisele adicione soli (jedinjenje I), **naznačeno time**, što se upotrebljavaju u metodu za lečenje bola.
Prijava sadrži još 4 zavisna patentna zahteva.

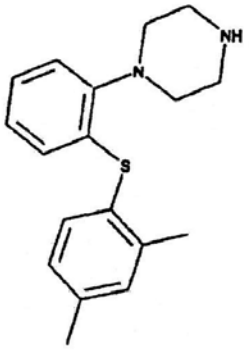

(51)	***A 61 K 31/515***	(2006.01)	**(11) 51542**
	C 07 D 239/54	(2006.01)	**(13) B**
	C 07 D 401/12	(2006.01)	
	C 07 D 401/14	(2006.01)	
	C 07 D 403/10	(2006.01)	
	C 07 D 401/06	(2006.01)	
	C 07 D 403/04	(2006.01)	
	C 07 D 401/04	(2006.01)	
	C 07 D 403/12	(2006.01)	
	C 07 D 417/04	(2006.01)	
	C 07 D 513/04	(2006.01)	
	C 07 D 413/12	(2006.01)	
	C 07 D 403/04	(2006.01)	
	C 07 D 413/14	(2006.01)	
	C 07 D 413/04	(2006.01)	

(21) P-2004/0356 (22) 21.10.2002.
(43) 17.08.2006.
(30) US 26.10.2001. 60/339, 568
US 06.03.2002. 60/362, 191
(86) WO 21.10.2002. PCT/GB02/04753
(87) WO 01.05.2003. WO 03/035077 A1

(54) N-SUPSTITUISANI HIDROKSIPIRIMIDINON KARBOKSAMIDNI INHIBITORI HIV INTEGRAZE
N−SUBSTITUTED HYDROXYPYRIMIDINONE CARBOXAMIDE INHIBITORS OF HIV INTEGRASE
(73) ISTITUTO DI RICERCHE DI BIOLOGIA MOLECOLARE P.ANGELETTI SPA, Via Pontina Km.30, 600, I-00040 Pomezia, IT
(72) CRESCENZI, Benedetta, IRBM, Via Pontina Km. 30, 600, I-00040 Pomezia, IT; GARDELLI, Cristina, IRBM, Via Pontina Km. 30, 600, I-00040 Pomezia, IT; MURAGLIA, Ester, IRBM, Via Pontina Km. 30, 600, I-00040 Pomezia, IT; NIZI, Emanuela, IRBM, Via Pontina Km. 30, 600, I-00040 Pomezia, IT; ORVIETO, Federica, IRBM, Via Pontina Km. 30, 600 , I-00040 Pomezia, IT; PACE, Paola, IRBM, Via Pontina Km. 30, 600, I-00040 Pomezia, IT; PESCATORE, Giovanna, IRBM, Via Pontina Km. 30, 600, I-00040 Pomezia, IT; PETROCCHI, Alessia, IRBM, Via Pontina Km. 30, 600, I-00040 Pomezia, IT; POMA, Marco, IRBM, Via Pontina Km. 30, 600, I-00040 Pomezia, IT; ROWLEY, Michael, Via Pontina Km. 30, 600, I-00040 Pomezia, IT; SCARPELLI, Rita, IRBM, Via Pontina Km. 30, 600, I-00040 Pomezia, IT; SUMMA, Vincenzo, IRBM, Via Pontina Km. 30, 600, I-00040 Pomezia, IT
(74) ŽIVKO MIJATOVIĆ & PARTNERS, Takovska 58, 11000 Beograd, RS
(57) Jedinjenje formule (I): gde R^1 je (1)-H, (2)-C_{1-6} alkil, koji je izborno supstituisan sa jednim ili više supstituenata, gde je svaki od njih nezavisno halogen, -OH, -CN, -O-C_{1-6} alkil, -O-C_{1-6} haloalkil, -C(=O)R^a, -CO_2R^a, -SR^a, -S(=O)R^a, -N(R^aR^b), -C(=O)-C_{0-6}alkil-N(R^aR^b), N(R^a)-C(=O)-C_{0-6}alkil-N(R^bR^c), -SO_2R^a, -N(R^a)SO_2R^b, -SO_2N(R^aR^b), -N(R^a)-C(=O)R^b, ili -N(R^a)C(=0)C(=0)N(R^aR^b), (3)-R^k,(4) –C_{1-6}alkil-R^k, gde:
(i) alkil je izborno supstituisan sa jednim ili više supstituenata gde je svaki od njih nezavisno halogen, -OH, -CN, -O-C_{1-6}alkil, -O-C_{1-6} haloalkil, -N(R^aR^b), -N(R^a)CO_2R^b, -N(R^a)C(=O)-C_{0-6} alkil-N(R^bR^c) ili -N(R^a)-C_{2-6} alkil-OH uz uslov da -OH nije vezan za alfa ugljenikov atom do N(R^a); i
(ii) alkil je izborno monosupstituisan sa -R^s, -C_{1-6} alkil-R^s, -N(Ra)-C(=O)-C_{0-6} alkil-R^s, -N(R^a)-C_{0-6} alkil-R^s, -O-C_{0-6} alkil-R^s ili -N(R^a)-C(=O)-C_{0-6} alkil-R^s; gde R^s je
(a) aril koji je izborno supstituisan sa jednim ili više supstituenata, gde je svaki od njih nezavisno halogen, -OH, -C_{1-6} alkil, -C_{1-6} alkil-OR^a, -C_{1-6} haloalkil, -O-C_{1-6} alkil, -O-C_{1-6} haloalkil, metilendioksi vezan za dva susedna ugljenikova atoma ili aril;
(b) 4- do 8-člani zasićeni heterociklični prsten koji sadrži od 1 do 4 heteroatoma nezavisno izabrana od N, O i S; gde je zasićeni heterociklični prsten izborno supstituisan sa jednim ili više supstituenata gde je svaki od njih nezavisno halogen, -C_{1-6} alkil, -C_{1-6} alkil-OR^a, -C_{1-6} haloalkil, -O-C_{1-6} alkil, -O-C_{1-6} haloalkil, -C(=O)R^a, -CO_2R^a, -C(=O)-C_{0-6} alkil-N(R^aR^b), -SO_2R^a, okso, aril ili -C_{1-6} alkil-aril; ili (c) 5- do 7-člani heteroartomatični prsten koji sadrži od 1 do 4 heteroatoma nezavisno izabrana od N, O i S; pri čemu je heteroaromatični prsten izborno supstituisan sa jednim ili više supstituenata gde je svaki od njih nezavisno halogen, -C_{1-6} alkil, -C_{1-6} alkil-OR^a, -C_{1-6} haloalkil, -O-C_{1-6} alkil, -O-C_{1-6} haloalkil, okso ili aril;
(5) -C_{0-6} alkil-O-C_{0-6} alkil-R^k,
(6) -C_{0-6} alkil-S(O)$_n$-C_{0-6} alkil-R^k,
(7) -O-C_{1-6} alkil-OR^k,
(8) -O-C_{1-6} alkil-O-C_{1-6} alkil-R^k,

(9) -O-C_{1-6} alkil-S(O)$_n$R^k,
(10)-C_{0-6}alkil-N(R^a)-R^k,
(11) -C_{0-6} alkil-N(R^a)-C_{1-6} alkil-R^k,
(12) -C_{0-6} alkil-N(R^a)-C_{1-6} alkil-OR^k,
(13)-C_{0-6} alkil-C(=O)-R^k,
(14) -C_{0-6} alkil-C(=O)N(R^a)-C_{0-6} alkil-R^k,
(15) -C_{0-6} alkil-N(R^a)C(=O)-C_{0-6} alkil-R^k,
(16) -C_{0-6} alkil-N(R^a)C(=O)-O-C_{0-6} alkil-R^k ili
(17) -C_{0-6} alkil-N(R^a)C(=O)C(=O)R^k;
R^2 je -C_{1-6} alkil koji je izborno supstituisan sa jednim ili više supstituenata. gde je svaki od nezavisno
(1) halogen.
(2) -OH,
(3) -CN,
(4) -O-C_{1-6} alkil,
(5)-O-C_{1-6} haloalkil,
(6) -C(=O)R^a,
(7) -CO$_2$R^a,
(8) -SR^a,
(9) -S(=O)R^a,
(10) -N(R^{a}R^b),
(11) -C(=O)N(R^{a}R^b),
(12) -N(R^a)-C(=O)-C_{1-6} alkil-N(R^{b}R^c),
(13) -SO$_2$R^a,
(14) -N(R^a)SO$_2$R^b,
(15) -SO$_2$N(R^{a}R^b),
(16) -N(R^a)-C(R^b)=O,
(17) -C_{3-8} cikloalkil,
(18) aril, pri čemu je aril izborno supstituisan sa jednim ili više supstituenata gde je svaki od njih nezavisno halogen, -C_{1-6} alkil, -C_{1-6} haloalkil, -O-C_{1-6} alkil, -O-C_{1-6} haloalkil, -C_{0-6} alkil-N(R^{a}R^b) ili -C_{1-6} alkil supstituisan sa 5- ili 6-članim zasićenim heterocikličnim prstenom koji sadrži 1 do 4 heteroatoma nezavisno izabrana od N, O i S; pri čemu je zasićeni heterociklični prsten izborno supstituisan sa od 1 do 3 supstituenata gde je svaki od njih nezavisno -C_{1-6} alkil, okso ili 5- ili 6-člani heteroartomatični prsten koji sadrži od 1 do 4 heteroatoma nezavisno izabrana od N, O i S; ili (19) 5- do 8-člani jednociklični heterociklični prsten koji je zasićen ili nezasićen i koji sadrži od 1 do 4 heteroatoma nezavisno izabrana od N, O i S; pri čemu je heterociklični prsten izborno supstituisan sa jednim ili više supstituenata gde je svaki od njih nezavisno -C_{1-6} alkil, -O-C_{1-6} alkil, okso, fenil ili naftil; uz uslov da nijedan od sledećih supstituenata nije vezan za ugljenikov atom u -C_{1-6} alkil grupi koji je vezan za azot iz prstena: halogen, -OH, -O-C_{1-6} alkil, -O-C_{1-6} haloalkil, -SR^a, -S(=O)R^a ili -N(R^a)-C(R^b)=O;
R^3 je -H ili -C_{1-6} alkil;
R^4 je (1)H, (2) C_{1-6} alkil koji je izborno supstituisan sa jednim ili više supstituenata, gde je svaki od njih nezavisno halogen, -OH, O-C_{1-6} alkil, -O-C_{1-6} haloalkil, -NO$_2$, -N(R^{a}R^b), -C(=O)R^a, -CO$_2$R^a, -SR^a, -S(=O)R^a, -SO$_2$R^a ili -N(R^a)CO$_2$R^b, (3) C_{1-6} alkil koji je izborno supstituisan sa jednim ili više supstituenata, gde je svaki od njih nezavisno halogen, -OH ili O-C_{1-4} alkil, i koji je supstituisan sa 1 ili 2 supstituenta pri čemu je svaki od njih nezavisno: (i) C_{3-8} cikloalkil, (ii) aril,(iii) fuzionisani dvociklični karbociklični prsten koji se sastoji od benzolovog prstena fuzionisanog za C_{5-7} cikloalkil, (iv) 5- ili 6-člani zasićeni heterociklični prsten koji sadrži od 1 do 4 heteroatoma nezavisno izabrana od N, O i S, (v) 5- ili 6-člani heteroartomatični prsten koji sadrži od 1 do 4 heteroatoma nezavisno izabrana od N, O i S, ili (vi) 9- ili 10-člani fuzionisani dvociklični heterociklični prsten koji sadrži od 1 do 4 heteroatoma nezavisno izabrana od N, O i S, pri čemu je najmanje jedan od prstenova aromatičan, (4) C_{2-5} alkinil izborno supstituisan sa aril, (5) C_{3-8} cikloalkil izborno supstituisan sa aril, (6) aril, (7) fuzionisani dvociklični karbociklični prsten koji se sastoji od benzolovog prstena fuzionisanog za C_{5-7} cikloalkil, (8) 5- ili 6-člani zasićeni heterociklični prsten koji sadrži od 1 do 4 heteroatoma nezavisno izabrana od N, O i S, (9) 5- ili 6-člani heteroartomatični prsten koji sadrži od 1 do 4 heteroatoma nezavisno izabrana od N, O i S, ili (10) 9- ili 10-člani fuzionisani dvociklični heterociklični prsten koji sadrži od 1 do 4 heteroatoma nezavisno izabrana od N, O i S, pri čemu je najmanje jedan od prstenova aromatičan; gde svaki aril u (3)(ii) ili aril u (4), (5) ili (6) ili svaki fuzionisani karbociklični prsten u (3)(iii) ili fuzionisani karbociklični prsten u (7) je izborno supstituisan sa jednim ili više supstituenata gde je svaki od njih nezavisno halogen, -OH, -C_{1-6} alkil, -C_{1-6} alkil-OR^a, -C_{1-6} haloalkil. -O-C_{1-6} alkil, -O-C_{1-6} haloalkil. -CN, -NO$_2$. -N(R^{a}R^h), -C_{1-6} alkil-N(R^{a}R^b), -C(=O)N(R^{a}R^b), -C(=O)R^a, -CO$_2$R^a, -C1-$_6$ alkil-CO$_2$R^a, -OCO$_2$R^a, -SR^a, -S(=O)R^a, -SO$_2$R^a, -N(R^a)SO$_2$R^b, -SO$_2$N(R^{a}R^b), -N(R^a)C(=O)R^b, -N(R^a)CO$_2$R^b, -C_{1-6} alkil-N(R^a)CO$_2$R^b, aril, -C_{1-6} alkil-aril, -O-aril ili –C_{0-6} alkil-het, pri čemu je het 5- ili 6-člani heteroartomatični prsten koji sadrži od 1 do 4 heteroatoma nezavisno izabrana od N, O i S, i het je izborno fuzionisan sa benzolovim prstenom, i izborno je supstituisan sa jednim ili više supstituenata gde je svaki od njih nezavisno -C_{1-6} alkil, -C_{1-6} haloalkil, -O-C_{1-6} alkil, -O-C_{1-6} haloalkil okso ili -CO$_2$R^a; svaki zasićeni heterociklični prsten u (3)(iv) ili zasićeni heterociklični prsten u (8) je izborno supstituisan sa jednim ili više supstituenata gde je svaki od njih nezavisno halogen, -C_{1-6} alkil, -C_{1-6} haloalkil, -O-C_{1-6} alkil, -O-C_{1-6} haloalkil, okso, aril ili 5- ili 6-člani heteroartomatični prsten koji sadrži od 1 do 4 heteroatoma nezavisno izabrana od N, O i S; I svaki hteroaromatični prsten u (3)(v) ili heteroaromatični prsten u (9) ili svaki fuzionisani dvociklični heterociklični prsten u (3) (vi) ili fuzionisani dvociklični heterociklični prsten u (10) je izborno supstituisan sa jednim ili više supstituenata gde je svaki od njih nezavisno halogen, -C_{1-6} alkil, -C_{1-6} haloalkil, -O-C_{1-6} alkil, -O-C_{1-6} haloalkil, okso, aril ili -C_{1-6} alkil-aril; ili alternativno, R^3 i R^4 zajedno sa N za koji su oba vezani formiraju C_{3-7} azacikloalkil koji je izborno supstituisan sa jednim ili više supstituenata, gde je svaki od njih nezavisno -C_{1-6} alkil ili okso; svako R^a, R^b, R^c i R^d nezavisno je -H ili –C_{1-6} alkil; R^k je karbociklični ili heterociklični prsten, pri čemu je karbociklični ili heterociklični prsten izborno supstituisan sa jednim ili više supstituenata gde je svaki od njih nezavisno
(1) halogen,
(2) -OH,
(3) -CN,

(4) -C_{1-6} alkil, koji je izborno supstituisan sa jednim ili više supstituenata, gde je svaki od njih nezavisno halogen, -OH, -CN, -O-C_{1-6} alkil, -O-C_{1-6} haloalkil, -C(=O)R^a, -CO_2R^a, -SR^a, -S(=O)R^a, -N(R^aR^b), -C(=O)-$(CH_2)_{0-2}$N(R^aR^b), N(R^a)-C(=O)-$(CH_2)_{0-2}$N(R^bR^c), -SO_2R^a, -N(R^a)SO_2R^b, -SO_2N(R^aR^b) ili -N(R^a)-C(R^b)=O,
(5) -O-C_{1-6} alkil, koji je izborno supstituisan sa jednim ili više supstituenata, gde je svaki od njih nezavisno halogen, -OH, -CN, -O-C_{1-6} alkil, -O-C_{1-6} haloalkil, -C(=O)R^a, -CO_2R^a, -SR^a, -S(=O)R^a, -N(R^aR^b), -C(=O)-$(CH_2)_{0-2}$N(R^aR^b), N(R^a)-C(=O)-$(CH_2)_{0-2}$N(R^bR^c), -SO_2R^a. -N(R^a)SO_2R^b. -SO_2N(R^aR^b) ili -N(R^a)-C(R^b)=O,
(6) -NO_2,
(7) okso.
(8) -C(=O)R^a,
(9) -CO_2R^a,
(10) -SR^a,
(11)-S(=O)R^a,
(12)-N(R^aR^b),
(13)-C(=O)N(R^aR^b),
(14) -C(=O)-C_{1-6} alkil-N(R^aR^b),
(15) -N(R^a)C(=O)R^b,
(16) -SO_2R^a,
(17) -SO_2N(R^aR^b),
(18)-N(R^a)SO_2R^b,
(19) -R^m,
(20) -C_{1-6} alkil-R^m, pri čemu je alkil izborno supstituisan sa jednim ili više supstituenata gde je svaki od njih nezavisno halogen, -OH, -CN, -C_{1-6} haloalkil, -O-C_{1-6}alkil, -O-C_{1-6} haloalkil, -C(=O)R^a, -CO_2R^a, -SR^a, -S(=O)R^a, -N(R^aR^b), -N(R^a)CO_2R^b, -SO_2R^a, -N(R^a)SO_2R^b, -SO_2N(R^aR^b) ili -N(R^a)-C(R^b)=O,
(21) -C_{0-6} alkil-N(R^a)-C_{0-6} alkil-R^m,
(22) -C_{0-6} alkil-O-C_{0-6} alkil-R^m,
(23) -C_{0-6} alkil-S-C_{0-6} alkil-R^m,
(24) -C_{0-6} alkil-C(=O)-C_{0-6} alkil-R^m,
(25) -C(=O)-O-C_{0-6} alkil-R^m,
(26) -C(=O)N(R^a)-C_{0-6} alkil-R^m,
(27) -N(R^a)C(=O)-R^m,
(28) -N(R^a)C(=O)-C_{1-6} alkil-R^m, pri čemu je alkil izborno supstituisan sa jednim ili više supstituenata gde je svaki od njih nezavisno halogen, -OH, -CN, -C_{1-6} haloalkil, -O-C_{1-6} alkil, -O-C_{1-6} haloalkil, -C(=O)R^a, -CO_2R^a, -SR^a, -S(=O)R^a, -N(R^aR^b), -N(R^a)CO_2R^b, -SO_2R^a, -N(R^a)SO_2R^b, -SO_2N(R^aR^b) ili -N(R^a)-C(R^b)=O,
(29) -N(R^a)-C(=O)-N(R^b)-C_{0-6} alkil-R^m,
(30) -N(Ra)-C(=O)-O-C_{0-6} alkil-R^m,
(31) -N(R^a)-C(=O)-N(R^b)-SO_2-C_{0-6} alkil-R^m,
(32) -C(=O)-C(=O)-N(R^aR^b),
(33) -C(=O)-C_{1-6} alkil-SO_2R^a ili
(34) -C(=O)-C(=O)R^m;
karbociklična grupa u R^k je (i) C_3 do C_8 jednociklični, zasićeni ili nezasićeni prsten, (ii) C_7 do C_{12} dvociklični sistem prstena ili (iii) C_{11} do C_{16} triciklični sistem prstena, pri čemu je svaki prsten u (ii) ili (iii) nezavisan od ili fuzionisan sa drugim prstenom ili prstenovima i svaki prstenje zasićen ili nezasićen; heterociklična grupa u R^k je (i) 4- do 8-člani, zasićeni ili nezasićeni jednociklični prsten, (ii) 7- do 12-člani dvociklični sistem prstena ili (iii) 11 do 16-člani triciklični sistem prstena; pri čemu je svaki prsten u (ii) ili (iii) nezavistan od ili fuzionisan za drugi prsten ili prstenove i svaki prsten je zasićen ili nezasićen; jednociklični prsten, dvociklični sistem prstena ili triciklični sistem prstena sadrži od 1 do 6 heteroatoma izabrana od N, O i S i ravnoteže ugljenikovih atoma; i gde su bilo koji ili više azotovih ili sumporovih heteroatoma izborno oksidovani, i gde su bilo koji ili više azotovih heteroatoma izborno kvaternizovani; svako R^m nezavisno je C_{3-8} cikloalkil; aril; 5- do 8-člani jednociklični heterociklični prsten koji je zasićen ili nezasićen i koji sadrži od 1 do 4 heteroatoma nezavisno izabrana od N, O i S; ili 9- do 10-člana dvociklična heterociklična grupa koja je zasićena ili nezasićena i sadrži od 1 do 4 heteroatoma nezavisno izabrana od N, O i S; gde su bilo koji ili više od heteroatoma azota i sumpora u heterocikličnoj grupi ili dvocikličnoj heterocikličnoj grupi izborno oksidovani i gde su bilo koji ili više od heteroatoma azota izborno kvaternizovani; i gde cikloalkil ili aril određen u R^m je izborno supstituisan sa jednim ili više supstituenata gde je svaki od njih nezavisno halogen, -C_{1-6} alkil izborno supstituisan sa -O-C_{1-4} alkil, -C_{1-6} haloalkil, -O-C_{1-6} alkil, -O -C_{1-6} haloalkil, -N(R^aR^b), aril ili -C_{1-6} alkil-aril; i jednociklična ili dvociklična heterociklična grupa u R^m je izborno supstituisana sa jednim ili više supstituenata gde je svaki od njih nezavisno halogen, -C_{1-6} alkil, -C1-$_6$ haloalkil, -O-C_{1-6} alkil, -O-C_{1-6} haloalkil, okso, aril, -C_{1-6} alkil-aril, -C(=O)-aril, -CO_2-aril, -CO_2-C_{1-6} alkil-aril, 5- ili 6-člani zasićeni heterociklični prsten koji sadrži od 1 do 4 heteroatoma nezavisno izabrana od N, O i S, ili 5- ili 6-člani heteroartomatični prsten koji sadrži od 1 do 4 heteroatoma nezavisno izabrana od N, O i S; i svako n nezavisno je ceo broj jedna nula, 1 ili 2; ili njegova farmaceutski prihvatljiva so.
Prijava sadrži još 38 patentnih zahteva.

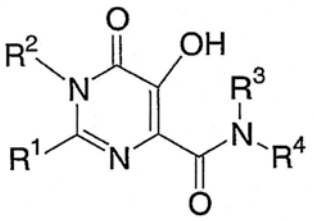
(I);

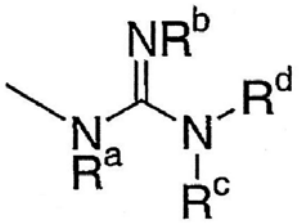
,

(51) ***A 61 K 31/546*** (2006.01) **(11) 51506**
A 61 K 9/00 (2006.01) **(13) B**
A 61 K 31/46 (2006.01)
A 61 P 31/04 (2006.01)
(21) P-2010/0465 (22) 28.11.2005.
(30) IN 02.12.2004. DE24112004
(86) WO 28.11.2005. PCT/IN2005/000382
(87) WO 08.06.2006. WO 2006/059344
(96) 28.11.2005. 05817957.3
(97) 11.08.2010. EP1841432B 2010/32 EN
(54) SMEŠE ZA SUZBIJANJE BETA-LAKTAMAZOM POSREDOVANE REZISTENCIJE NA ANTIBIOTIKE UPOTREBOM INHIBITORA BETA-LAKTAMAZE KORISNE ZA INJEKCIJE
COMPOSITIONS FOR COMBATING BETA-LACTAMASE-MEDIATED ANTIBIOTIC RESISTANCE USING BETA-LACTAMASE INHIBITORS USEFUL FOR INJECTION
(73) VENUS REMEDIES LIMITED, H. O&R&D, 51-52 Industrial Area Phase 1, Panchkula 134113 HR, IN
(72) CHAUDHARY, Manu, 51-52, Industrial Area, Phase-1, Panchkula 134 113, Haryana, IN
(74) ŽIVKO MIJATOVIĆ & PARTNERS, Takovska 58, 11000 Beograd, RS
(57) Farmaceutska smeša za suzbijanje beta-laktamazom posredovane rezistencije na antibiotike, koja upotrebljava inhibitor beta-laktamaze, **naznačena time**, što sadrži:
a) beta-laktamski antibiotik ceftriakson ili njegovu farmaceutski prihvatljivu so,
b) inhibitor beta-laktamaze sulbaktam ili njegovu farmaceutski prihvatljivu so gde su jedinjenja dela (a) i dela (b) pomešana u težinskom odnosu od 1:4 do 4:1, poželjno od 1:3 do 3:1, poželjnije 2:1 do 1:2,
(c) inhibitor formiranja čestica koji je aminokarbonsko-kiselinsko helirajuće sredstvo, koje je EDTA ili njegova farmaceutski prihvatljiva so, u opsegu od 0.002 mg/ml do 10 mg/ml, posle rekonstitucije, i gde je pomenuta smeša fiksna dozna kombinacija koja se primenjuje parenteralno posle rekonstituisanja sa zapreminom vodenog rastvarača odabranog između sterilne vode za injekcije, bakteriostatske vode za injekcije i izotoničnog sterilnog rastvora natrijum-hlorida, gde pomenuta smeša dalje sadrži farmaceutski prihvatljivo sredstvo za podešavanje toničnosti koje smeši daje fiziološku izotoničnost, odabrano iz grupe koja sadrži natrijum-hlorid i dekstrozu, pomenuto sredstvo za toničnost je prethodno pomešano sa smešom, ili upotrebljeno tokom pomenute rekonstitucije, ili alternativno u vreme infuzije.
Prijava sadrži još 10 zavisnih patentnih zahteva.

---

(51) ***A 61 K 31/55*** (2006.01) **(11) 51534**
A 61 P 9/10 (2006.01) **(13) B**
A 61 K 31/4422 (2006.01)
(21) P-2010/0554 (22) 20.12.2006.
(30) FR 21.12.2005. 0513008
(96) 20.12.2006. 06291991.5
(97) 17.11.2010. EP1800683B 2010/46 FR
(54) NOVI SPOJ INIHBITORA SINUSOIDNE IF STRUJE I KALCIJUMSKOG INHIBITORA I FARMACEUTSKE SMEŠE KOJE GA SADRŽE
NEW ASSOCIATION OF AN If SINUSOIDAL CURRENT INHIBITOR AND A CALCIUM CHANNEL-BLOCKING AGENT, AND PHARMACEUTICAL INGREDIENTS CONTAINING SAID ASSOCIATION
(73) LES LABORATOIRES SERVIER, 12, Place de La Défense, 92415 Courbevoie Cedex, FR
(72) BENATAR, Vidal, 111, rue des Tennerolles, 92210 Saint-Cloud, FR; LEREBOURS-PIGEONNIERE, Guy, 28, avenue de l'Europe, 92300 Levallois-Perret, FR
(74) PETOŠEVIĆ DOO, Vele Nigrinove 16a, 11000 Beograd, RS
(57) Farmaceutska smeša koja sadrži selektivni i specifični inhibitor sinusne struje i inhibitor kalcijuma.
Prijava sadrži još 10 zavisnih patentnih zahteva.

---

(51) ***A 61 K 31/56*** (2006.01) **(11) 51537**
A 61 K 31/565 (2006.01) **(13) B**
A 61 K 31/568 (2006.01)
A 61 K 47/14 (2006.01)
A 61 P 15/08 (2006.01)
A 61 P 5/26 (2006.01)
(21) P-2005/0702 (22) 15.03.2004.
(43) 04.06.2007.
(30) DK 14.03.2003. PA200300399
(86) WO 15.03.2004. PCT/IB2004/000716
(87) WO 23.09.2004. WO 2004/080383 A3
(54) POSTUPCI I FARMACEUTSKI SASTAVI ZA POUZDANO POSTIZANJE PRIHVATLJIVIH NIVOA SERUMA TESTOSTERONA
METHODS AND PHARMACEUTICAL COMPOSITIONS FOR RELIABLE ACHIEVEMENT OF ACCEPTABLE SERUM TESTOSTERONE LEVELS
(73) BAYER SCHERING PHARMA AKTIENGESELLSCHAFT, Müllerstrasse 178, 13342 Berlin, DE
(72) HÜBLER, Doris, Ortsstrasse 12, 07407 Schmieden, DE; FRICKE, Sabine, An der Riese 1b, 07749 Jena, DE; INGWERSEN, Jan-Peter, Im Amsteltal 10, 13465 Berlin, DE; KUHNZ, Wilhelm, Tegeler Weg 13, 13589 Berlin, DE
(74) MIHAILOVIĆ, Vojislav, Vuka Karadžića 7a/IV, 11000 Beograd, RS
(57) Sastav, **naznačen time**, što je formulisan za intramuskularno ubrizgavanje koji sadrži testosteron estar odabran od grupe koja sadrži u normalnom nizu ili račvaste nonkanoate, dekanoate, undekanoate, dodekanoate, tridekanoate, tetradekanoate i pentadekanoate; i nosač koji sadrži ricinusovo ulje u koncentraciji od 25-45 zapr.% i ko-rastvarač.
Prijava sadrži još 16 patentnih zahteva.

(51) ***A 61 K 36/28*** (2006.01) **(11) 51508**
A 61 K 135/00 (2006.01) **(13) B**
A 61 K 9/22 (2006.01)
A 61 K 36/53 (2006.01)
A 61 K 9/02 (2006.01)
A 61 K 133/00 (2006.01)
A 61 P 15/02 (2006.01)
(21) P-2006/0394 (22) 22.06.2006.
(43) 05.06.2008.
(30) YU 22.06.2006. P-2006/0394
(54) POSTUPAK ZA DOBIJANJE BILJNIH VAGINALETA
PROCESS FOR PREPARATION OF HERBAL VAGINAL SUPOSITORIES
(73) PETROVIĆ, Slobodan, Bulevar Oslobođenja 401i, 11000 Beograd, RS
(72) PETROVIĆ, Slobodan, Bulevar Oslobođenja 401i, 11000 Beograd, RS
(57) Postupak za dobijanje biljnih vaginaleta, **naznačen time** što obuhvata formulisanje u odnosu 50:50% V/V nosača i bioaktivnih fenolnih i azulenskih jedinjenja čistoće > 90%, u sudu pod sniženim pritiskom na 51°C tokom 4 časa, unošenje dobijene formulacije na istoj temperaturi u pripremljene supaforme, hlađenje ispunjenih supa-formi do temperature od 8°C i njihovo brzo zatvaranje.
Prijava sadrži još 5 zavisnih patentnih zahteva.

---

(51) ***A 61 K 38/24*** (2008.04) **(11) 51505**
A 61 P 15/08 (2008.04) **(13) B**
(21) P-2004/0212 (22) 12.09.2002.
(43) 17.08.2006.
(30) EP 12.09.2001. 01307755.7
(86) WO 12.09.2002. PCT/GB02/04147
(87) WO 20.03.2003. WO 03/022301
(54) KORIŠĆENJE LH U KONTROLISANOJ HIPERSTIMULACIJI OVARIJUMA
USE OF LH IN CONTROLLED OVARIAN HYPERSTIMULATION
(73) LABORATOIRES SERONO SA, Centre Industriel, 1267 Coinsins, Vaud, CH
(72) HILLIER, Stephen, The University of Edinburgh Centre for Reproductive Biology 37 Chalmers Street, Edinburgh EH3 9ET, GB; HOWLES, Colin Michael, Serono International S.A.15 Chemin des Mines, CH-1202 Geneva, CH
(74) NAUMOVIĆ, Zoran, Krunska 77, 11000 Beograd, RS
(57) Upotreba luteinizirajućeg hormona (LH) ili njegovog analoga, za proizvodnju medikamenta za indukciju multiple folikulofgeneze kod humanih pacijentkinja **naznačeno time** da se taj medikament daje tokom perioda prajminga koji počinje 1. dana stimulatorne faze kod kontrolisane ovarijalne hiperstimulacije (COH), i ne nastavlja se posle 4. dana stimulatorne faze COH, naznačeno time da se medikament LH daje u odsustvu davanja egzogenog hormona za stimulaciju folikula (FSH) tokom perioda prajminga i **naznačeno time** da se davanje FSH inicira tek kada se davanje LH obustavi.
Prijava sadrži još 7 patentnih zahteva.

---

(51) ***A 61 K 39/02*** (2006.01) **(11) 51536**
A 61 K 39/116 (2006.01) **(13) B**
(21) P-2003/0493 (22) 11.12.2001.
(43) 17.08.2006.
(30) US 19.12.2000. 60/256, 637
(86) WO 11.12.2001. PCT/US01/47865
(87) WO 27.06.2002. WO 02/49666
(54) POBOLJŠANA BAKTERIJSKA VAKCINA MYCOPLASMA HYOPNEUMONIAE
IMPROVED MYCOPLASMA HYOPNEUMONIAE BACTERIN VACCINE
(73) WYETH, Five Giralda Farms, Madison, NJ 07940, US
(72) CHU, Hsien-Jue (Steve), 1506 13th Avenue North, Fort Dodge, IA 50501, US; LI, Wumin, 1519 Knollcrest Drive, Fort Dodge, IA 68506, US; XU, Zhichang, 2920 18th Avenue North, Fort Dodge, IA 50501, US
(74) MIKIJELJ, Rade i ost., Vlajkovićeva 28, 11000 Beograd, RS
(57) Kompozicija vakcine za imunizaciju životinja protiv infekcije Mycoplasma hyopneumoniae, **naznačena time**, što uključuje imunizirajuću količinu bakterina Mycoplasma hyopneumoniae;smešu pomoćnih sredstava koju čine polimer akrilne kiseline i smeša metaboličnog ulja i polioksietilen-polioksipropilen blok kopolimera; i farmaceutski prihvatljiv nosač, gde kompozicija vakcine posle jednog davanja izaziva zaštitni imunitet od Mycoplasma hyopneumoniae.
Prijava sadrži još 17 patentnih zahteva.

---

(51) ***B 21 D 13/04*** (2006.01) **(11) 51520**
E 04 C 2/00 (2006.01) **(13) B**
B 21 D 13/10 (2006.01)
(21) P-2010/0514 (22) 03.05.2007.
(30) DE 08.05.2006. 102006021556
(86) WO 03.05.2007. PCT/EP2007/003902
(87) WO 15.11.2007. WO 2007/128490
(96) 03.05.2007. 07724828.4
(97) 25.08.2010. EP2015879B 2010/34 DE
(54) PRIČVRSNI ELEMENT ZA KOMPONENTE ZA SUVU GRADNJU I POSTUPAK ZA IZRADU TAKVIH PRIČVRSNIH ELEMENATA
FASTENING ELEMENT FOR DRY CONSTRUCTION ELEMENTS, AND METHOD FOR THE PRODUCTION OF SUCH A FASTENING ELEMENT
(73) RICHTER-SYSTEM GmbH & Co. KG, Flughafenstrasse 10, 64347 Griesheim, DE
(72) KNAUF, Alfons, Jean, Flughafenstr. 10, 64347 Griesheim, DE
(74) RISTIĆ, Dragoslav i ost., Cara Lazara 7, 11000 Beograd, RS
(57) Pričvrsni element (1, 1', 1") za komponente za suvu gradnju koje imaju lim (15) sa najmanje jednim spojnim segmentom (5), kod koga je lim (15) u području

najmanje jednog spojnog segmenta (5) predviđen sa velikim brojem udubljenja (6), gde se udubljenja (6) formiraju putem profilisanih površina lima (15), tako da udubljenja (6) na jednoj strani lima formiraju uzvišenja (7) na suprotnoj strani lima (15), **naznačen time** što su udubljenja (6) uvek okružena kliznim površinama (9) koje su nagnute relativno u odnosu na zamišljenu srednju liniju (M) lima (15) za postavljanje spojnog sredstva u, odnosno kroz spojni segment (5), predviđena da okruže spojno sredstvo, jer lim (15) u najmanje jednom spojnom segmentu (5), izuzev udubljenja (6) i/ili uzvišenja (7), nema nijednu paralelnu površinu u odnosu na zamišljenu srednju liniju (M) lima (15).
Prijava sadrži još 14 zavisnih patentnih zahteva.

---

(51) ***C 07 C 275/24*** (2006.01) **(11) 51555**
A 61 P 29/00 (2006.01) **(13) B**
A 61 K 31/17 (2006.01)
(21) P-2010/0441 (22) 06.12.2007.
(30) EP 21.12.2006. 06026533
(86) WO 06.12.2007. PCT/IB2007/003784
(87) WO 26.06.2008. WO 2008/075150
(96) 06.12.2007. 07848984.6
(97) 01.09.2010. EP2094653B 2010/35 EN
(54) O-SUPSTITUISANI-DIBENZIL UREA-DERIVATI KAO ANTAGONISTI TRPV1 RECEPTORA
O-SUBSTITUTED-DIBENZYL UREA-DERIVATIVES AS TRPV1 RECEPTOR ANTAGONISTS
(73) PHARMESTE S.R.L., Via Saragat 1, I-44100 Ferrara, IT
(72) BARALDI, Pier Giovanni, Via Saragat, 1, 44100 Ferrara, IT; BOREA, Pier Andrea, Via Saragat, 1, 44100 Ferrara, IT; GEPPETTI, Pierangelo, Via Saragat, 1, 44100 Ferrara, IT; FRUTTAROLO, Francesca, Via Fossato di Mortara 17/19 c/o Dipartimento di Scienze Farmaceutiche, 44100 Ferrara, IT; PAVANI, Maria Giovanna, Via Saragat, 1, 44100 Ferrara, IT; TREVISANI, Marcello, Via Saragat, 1, 44100 Ferrara, IT
(74) ĆOSOVIĆ, Dragoljub, Vojvode Dragomira 27, 11000 Beograd, RS
(57) Jedinjenja formule (I) u kojem: R je izabrano između: halogena, alkila, alkoksi, arila i heteroarila; R_1 je izabrano između: 2-hidroksietil, 2,3-dihidroksipropil, 3-hidroksipropil, 2,2-dihidroksietil, 3,3-dihidroksipropil, 1,3-dioksolan-etil, 1,3-dioksan-metil, 1,3-dioksolan-metil, 1,3-dioksan-etil, 3-fluoro-2-hidroksipropil, 3-karboksi-2-hidroksi-propil, 3-hloro-2-hidroksipropil, 2-hidroksipropil, 2-hidroksi-propen-2-il, morfolinoetil, piperazinoetil, hidroksimetil, benzil, 4-(hidroksimetil)benzil, 4-hlorobenzil, 4-fluorobenzil, i 4-hidroksibenzil; R_2 je terc-butil trifluorometil; R_3 je nezavisno izabrano između: vodonika, karboksi, cijana, alkila, ili hidroksialkila, uključujući svenjihove optičke izomere i diastereoizomere, gde: „halogen" označava halogeni atom izabran između fluora, hlora, broma i joda; "alkil" je normalna ili razgranata (C_1-C_4) alkil grupa; "alkoksi" je normalna ili razgranata (C_1-C_4) alkoksi grupa; "aril" je fenil, koji može biti supstituisan sa jednim ili više halogena, alkil, alkoksi grupa kako je dato ranije u tekstu, cijano ili amino grupe, koje mogu biti iste ili različite jedna od druge; I "heteroaril" je 5- ili 6-to člani heterociklični prsten koji sadrži jedan ili više, atoma kiseonika ili sumpora, koji mogu biti isti ili različiti jedan od drugog.
Prijava sadrži još 9 zavisnih patentnih zahteva.

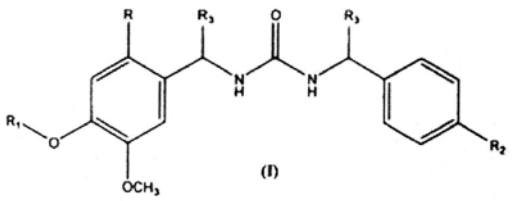

(I)

---

(51) ***C 07 D 213/61*** (2006.01) **(11) 51541**
A 61 K 31/444 (2006.01) **(13) B**
A 61 P 29/00 (2006.01)
(21) P-2002/0894 (22) 22.05.2001.
(43) 28.11.2005.
(30) US 26.05.2000. 60/208, 017
(86) WO 22.05.2001. PCT/US01/16566
(87) WO 06.12.2001. WO 01/92230 A1
(54) 5-HLORO-3-(4-METANSULFONILFENIL)-6'-METIL-/2, 3'/BIPIRIDINIL U ČISTOM KRISTALNOM OBLIKU I POSTUPAK SINTEZE
5-CHLORO-3-(4-METHANESULFONYLPHENYL)-6'-METHYL-/2, 3'/ BIPYRIDIYL IN PURE CRYSTALLINE FORM AND PROCESS FOR SYNTHESIS
(73) MERCK SHARP & DOHME CORP., 126 East Lincoln Avenue, Rahway, NJ 07065-0907, US
(72) CROCKER, Louis S., 126 East Lincoln Avenue, Rahway, NJ 07065-0907, US; DAVIES, Ian W., 126 East Lincoln Avenue, Rahway, NJ 07065-0907, US; OSIFCHIN, Richard G., 126 East Lincoln Avenue, Rahway, NJ 07065-0907, US; KOTLIAR, Andrew, 126 East Lincoln Avenue, Rahway, NJ 07065-0907, US
(74) ŽIVKO MIJATOVIĆ & PARTNERS, Takovska 58, 11000 Beograd, RS
(57) Polimorfni oblik jedinjenja formule A: koji je označen kao oblik V, **naznačen time** što ima položaj pika obrasca rendgenske difrakcije praha, Cu K alfa, na 13.7 angstrema.
Prijava sadrži još 16 patentnih zahteva.

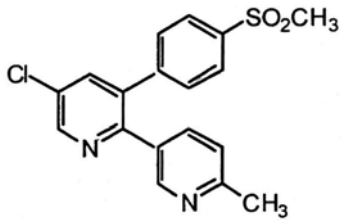

A

(51) ***C 07 D 213/82*** (2006.01) **(11) 51549**
C 07 D 251/18 (2006.01) **(13) B**
C 07 D 403/08 (2006.01)
C 07 D 498/04 (2006.01)
A 61 P 35/00 (2006.01)
C 07 D 239/48 (2006.01)
C 07 D 403/04 (2006.01)
C 07 D 473/32 (2006.01)
A 61 K 31/505 (2006.01)
(21) P-2011/0014 (22) 06.08.2007.
(30) US 08.08.2006. 836158P
(86) WO 06.08.2007. PCT/US2007/017463
(87) WO 14.02.2008. WO 2008/19124
(96) 06.08.2007. 07811106.9
(97) 20.10.2010. EP2049491B 2010/42 EN

(54) JEDINJENJA HETEROARILA KORISNA KAO INHIBITORI E1 AKTIVIRAJUĆIH ENZIMA

HETEROARYL COMPOUNDS USEFUL AS INHIBITORS OF E1 ACTIVATING ENZYMES

(73) MILLENNIUM PHARMACEUTICALS, INC., 40 Landsdowne Street, Cambridge, MA 02139, US

(72) CLAIBORNE, Christopher, F., 23 Sparks Street, Cambridge, MA 02138, US; CRITCHLEY, Stephen, 20 Carter Road, Braintree, MA 02184, US; LANGSTON, Steven, P., 164 Mill Road, N. Andover, MA 01845, US; OLHAVA, Edward, J., 19 Jay Street, Cambridge, MA 02139, US; PELUSO, Stephane, 97 Josephine Avenue 2, Somerville, MA 02144, US; WEATHERHEAD, Gabriel, S., 57a Ocean Avenue, Salem, MA 01970, US; VYSKOCIL, Stepan, 24 Hovey Street, Watertown, MA 02472, US; VISIERS, Irache, 57B Park Street, Arlington, MA 02474, US; MIZUTANI, Hirotake, 31 Rice Street 2, Cambridge, MA 01240, US; CULLIS, Courtney, 122 Springs Road, Bedford, MA 01730, US

(74) ŽIVKO MIJATOVIĆ AND PARTNERS, Takovska 58, 11000 Beograd, RS

(57) Jedinjenje formule (1): ili njegova farmaceutski prihvatljiva so, u kome: Prsten A je 6-člani heteroaril prsten koji sadrži azot, izborno fuzionisan za 5- ili 6-člani aril, heteroaril, cikloalifatičan ili heterocikličan prsten, u kome su jedan od prstenova ili oba prstena izborno supstituisani i jedan atom azota iz prstena je izborno oksidovan; W je $-CH_2-$, -CHF-, $-CF_2-$, $-CH(R^1)-$, $-CF(R^1)-$, -NH-, $-N(R^1)-$, -O-, -S- ili - NHC(O)-; R^1 je C_{1-4} alifatik ili C_{1-4} fluoroalifatik; ili R^1 je C_{2-4} alkilen lanac koji je vezan za položaj prstena na prstenu A da bi se formirao 5-, 6- ili 7-člani fuzionisani prsten, pri čemu je alkilen lanac izborno supstituisan sa C_{1-4} alifatikom, C_{1-4} fluoroalifatikom, =O, -CN ili $-C(O)N(R^4)_2$; X je $-CH_2-$, -CHF-, $-CF_2-$, -NH- ili -O-; Y je-O-,-S-ili-$C(R^m)(R^n)$-;R^a je izabran iz grupe koju čine vodonik, fluoro, -CN, $-N_3$, $-OR^5$, $-N(R^4)_2$, $-NR^4CO_2R^6$, $-NR^4C(O)R^5$, $-C(O)N(R^4)_2$, $-C(O)R^5$, $-OC(O)N(R^4)_2$, $-OC(O)R^5$, $-OCO_2R^6$ ili C_{1-4} alifatičan ili C_{1-4} fluoroalifatičan izborno supstituisan sa jednim ili dva supstituenta nezavisno izabrana iz grupe koju čine $-OR^{3x}$, $-N(R^{4x})(R^{4y})$, $-CO_2R^{5x}$ ili $-C(O)N(R^{4x})(R^{4y})$; ili R^a i R^c zajedno formiraju vezu; R^b je izabran iz grupe koju čine vodonik, fluoro, C_{1-4} alifatik i C_{1-4} fluoroalifatik; R^c je izabran iz grupe koju čine vodonik, fluoro, -CN, -Ny -OR^5, $-N(R^4)_2$, - $NR^4CO_2R^6$, $-NR^4C(O)R^5$, $-C(O)N(R^4)_2$, $-C(O)R^5$, $-OC(O)N(R^4)_2$, $-OC(O)R^5$, $-OCO_2R^6$ ili C_{1-4} alifatik ili C_{1-4} fluoroalifatik izborno supstituisan sa jednim ili dva supstituenta nezavisno izabrana iz grape koju čine $-OR^{5x}$, $-N(R^{4x})(R^{4y})$, $-CO_2R^{5x}$ ili $-C(O)N(R^{4x})(R^{4y})$; ili R^a i R^c zajedno formiraju vezu; R^d je izabran iz grupe koju čine vodonik, fluoro, C_{1-4} alifatik i C_{1-4} fluoroalifotik; R^e je vodonik, ili C_{1-4} alifatik; ili R^e, uzet zajedno sa jednim R^f i ugljenikovim atomima koji se nalaze između, formira 3- do 6-člani spirocikličan prsten; ili R^e; uzet zajedno sa R^m i ugljenikovim atomima koji se nalaze između, formira fuzionisani ciklopropan prsten, koji je izborno supstituisan sa jednim ili dva supstituenta nezavisno izabrana od fluoro ili C_{1-4} alifatik; R^e je vodonik ili C_{1-4} alifatik; ili R^e, uzet zajedno sa R^m i ugljenikovim atomima koji se nalaze između, formira fuzionisani ciklopropan prsten, koji je izborno supstituisan sa jednim ili dva supstituenta nezavisno izabrana od fluoro ili C_{1-4} alifatika; svako R^f nezavisno je vodonik, fluoro, C_{1-4} alifatik ili C_{1-4} fluoroalifatik; ili dva R^f uzeta zajedno formiraju =O; ili dva R^f, uzeta zajedno sa atomom ugljenika za koji su vezani, formiraju 3- do 6-člani karbocikličan prsten; ili jedan R^f, uzet zajedno sa R^e i ugljenikovim atomima koji se nalaze između, formira 3- do 6-člani spirocikličan prsten; R^m je vodonik, fluoro, $-N(R^4)_2$, ili izborno supstituisana C_{1-4} alifatična grupa; ili R^m i R^n zajedno formiraju =O ili $=C(R^5)_2$; ili R^m i R^e, uzeti zajedno sa ugljenikovim atomima koji se nalaze između, formiraju fuzionisani ciklopropan prsten, koji je izborno supstituisan sa jednim ili dva supstituenta nezavisno izabrana od fluoro ili C_{1-4} alifatika; ili R^m i R^e, uzeti zajedno sa ugljenikovim atomima koji se nalaze između, formiraju fuzionisani ciklopropan prsten, koji je izborno supstituisan sa jednim ili dva supstituenta koji su nezavisno izabrani od fluoro ili C_{1-4} alifatika; R^n je vodonik, fluoro, ili izborno supstituisana C_{1-4} alifatična grupa; ili R^m i R^n zajedno formiraju =O ili $=C(R^5)_{51549}$; svako R^4 nezavisno je vodonik ili izborno supstituisana alifatična, aril, heteroaril ili heterociklil grupa; ili dva R^4 na istom atomu azota, uzeti zajedno sa atomom azota, formiraju izborno supstituisani 4- do 8-člani heterociklil prsten koji ima, pored atoma azota, 0-2 heteroatoma u prstenu nezavisno izabrana od N, O i S; R^{4x} je vodonik, C_{1-4} alkil, C_{1-4} fluoroalkil ili C_{6-10} ar(C_{1-4})alkil, čiji aril deo može biti izborno supstituisan; R^{4y} je vodonik, C_{1-4} alkil, C_{1-4} fluoroalkil, C_{6-10} ar(C_{1-4})alkil, čiji aril deo može biti izborno supstituisan, ili izborno supstituisani 5- ili 6-člani aril, heteroaril ili heterociklil prsten; ili R^{4x} i R^{4y}, uzeti zajedno sa atomom azota za koji su vezani, formiraju izborno supstituisani 4- do 8-člani heterociklil prsten koji ima, pored atoma azota, 0-2 heteroatoma u prstenu nezavisno izabrana od N, O i S; i svako R^5 nezavisno je vodonik ili izborno supstituisana alifatična, aril, heteroaril ili heterociklil grupa; svako R^{5x} nezavisno je vodonik, C_{1-4} alkil, C_{1-4} fluoroalkil, ili izborno

supstituisani C_{6-10}aril ili C_{6-10} ar(C_{1-4})alkil; svako R^6 nezavisno je izborno supstituisana alifatična, aril ili heteroaril grupa; i m je 1,2 ili 3.
Prijava sadrži još 29 zavisnih patentnih zahteva.

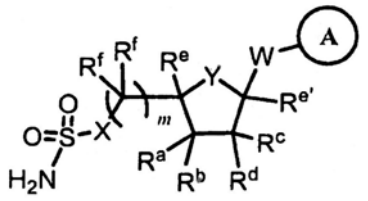

(I)

(51) ***C 07 D 215/18*** (2006.01) **(11) 51528**
(13) B
(21) P-2010/0440 (22) 25.04.2008.
(30) EP 25.04.2007. 07008412
(86) WO 25.04.2008. PCT/EP2008/003374
(87) WO 06.11.2008. WO 2008/131932
(96) 25.04.2008. 08749150.2
(97) 14.07.2010. EP2150533B 2010/28 EN
(54) POSTUPAK ZA PROIZVODNJU OPTIČKI AKTIVNIH ETENILFENILNIH ALKOHOLA
PROCESS FOR THE PREPARATION OF OPTICALLY ACTIVE ETHENYLPHENYL ALCOHOLS
(73) LONZA AG, Münchensteinerstrasse 38, 4052 Basel, CH
(72) MCGARRITY, John, Bäjiweg 45, 3902 Brig-Glis, CH; BAPPERT, Erhard, Vogesenstrasse 72, 4056 Basel, CH; BELSER, Thomas, Termerweg 36, 3900 Brig, CH
(74) PETOŠEVIĆ DOO, Vele Nigrinove 16A, 11000 Beograd, RS
(57) Postupak za proizvodnju optički aktivnog alkohola formule ili njegove slike u ogledalu, u kojima je R^1 nesupstituisani ili supstituisani heteroaril i R^2 je fenil ili supstituisani aril, asimetričnom hidrogenacijom ketona formule: gde su R^1 i R^2, kao što su prethodno definisani, **naznačen time** što se asimetrična hidrogenacija izvodi sa vodoničnim gasom u prisustvu katalizatorskog kompleksa metala platine koji sadrži hiralni fosfinski ligand, pri čemu metal platine se bira iz grupe, koja se sastoji od rutenijuma, rodijuma i iridijuma; i hiralni fosfinski ligand ima formulu: ili njegov lik u ogledalu, gde svaki R^{11} je fenil, 4-metilfenil, 3,5-dimetilfenil, furanil ili cikloheksil; svaki R^{12} je vodonik, C_{1-4}alkil ili C_{1-4}alkoksi; i gde (a) svaki Q je azot, i svaki R^{13} je C_{1-4}alkil ili C_{1-4}alkoksi; ili (b) svaki Q je =CR^{14}-, R^{14} je odabran iz grupe koja se sastoji od : vodonika, fluora, hlora, broma, joda i C_{1-4}alkoksi, i svaki R^{13} je C_{1-4}alkil ili C_{1-4}alkoksi; ili (c) svaki Q je =CH-, i obe R^{13} grupe zajedno obrazuju deo koji ima formulu -O-$(CH_2)_n$-O-, pri čemu je n ceo broj od 1 do 6; ili (d) svaki Q je =CR^{15}-, i svaki R^{15} zajedno sa R^{13} koji je vezan za isti benzenski prsten i zajedno sa pomenutim benzenskim prstenom obrazuje prstenasti sistem odabran iz grupe koja se sastoji od: naftalena, tetralina, 2,3-dihidro-benzo[1,4] dioksina, nesupstituisanog ili supstituisanog benzo[1,3]dioksola i N-metil-2,3-dihidro-benzo[1,4]oksazina.
Prijava sadrži još 15 zavisnih patentna zahteva.

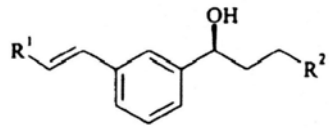

(I)

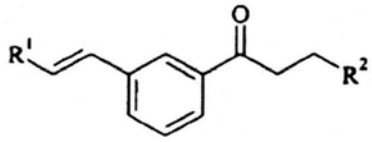

(II)

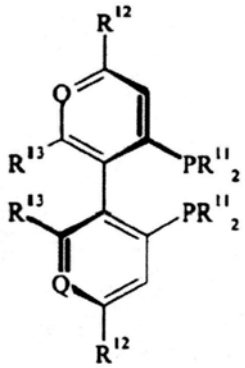

(III)

(51) ***C 07 D 223/16*** (2006.01) **(11) 51554**
(13) B
(21) P-2011/0002 (22) 27.08.2009.
(30) FR 29.08.2008. 0804755
(96) 27.08.2009. 09290646.0
(97) 06.10.2010. EP2166004B 2010/40 FR
(54) NOVI POSTUPAK RAZDVAJANJA ENANTIOMERA (3, 4-DIMETOKSI-BICIKLO [4.2.0]OKTA-1, 3, 5-TRIEN-7-IL)NITRILA I NJIHOVA PRIMENA NA SINTEZU IVABRADINA
NEW METHOD FOR RESOLUTION OF ENANTIOMERS OF (3, 4-DIMETHOXY-BICYCLO [4.2.0] OCTA-1, 3, 5-TRIEN-7-YL)NITRILE AND THEIR APPLICATION TO THE SYNTHESIS OF IVABRADINE
(73) LES LABORATOIRES SERVIER, 35, rue de Verdun, 92284 Suresnes Cedex, FR
(72) LERESTIF, Jean-Michel, 27 bis, rue de la Briqueterie, 76190 Yvetot, FR; LECOUVE, Jean-Pierre, 93, rue du Dr Vigné, 76600 Le Havre, FR; DRON, Daniel, 2036, route de la mer, 76119 sainte Marguerite sur Mer, FR; GOJON, Eric, 370, chemin de la Ferme Fleury, 76110 Gonfreville-Caillot, FR; PHAN, Maryse, 108, boulevard François 1er, 76600 Le Havre, FR

(74) PETOŠEVIĆ DOO, Vele Nigrinove 16a, 11000 Beograd, RS
(57) Postupak optičkog razdvajanja (3, 4-dimetoksi-biciklo[4.2.0]okta-l, 3, 5 trien-7-il)nitrila sa formulom (I) u kome se racemska modifikacija ili enantiomerički obogaćen (3, 4-dimetoksi-biciklo[4.2.0]okta-l, 3, 5-trien-7-il)nitril razdvaja na svoja dva enantiomera (S)-(3, 4-dimetoksi-biciklo[4.2.0]okta-1, 3, 5-trien-7-il)nitril sa formulom (Ia) i (R)-(3, 4-dimetoksi-biciklo[4.2.0]okta-1, 3, 5-trien-7-il)nitril sa formulom (Ib) putem hiralne hromatografije.
Prijava sadrži još 20 patentnih zahteva.

---

(51) ***C 07 D 231/12*** (2006.01) **(11) 51546**
C 07 D 401/10 (2006.01) **(13) B**
A 61 P 37/02 (2006.01)
C 07 D 413/10 (2006.01)
A 61 K 31/415 (2006.01)
(21) P-2010/0532 (22) 23.12.2004.
(30) GB 23.12.2003. 0329617
US 23.12.2003. 532199P
US 08.06.2004. 577843P
(86) WO 23.12.2004. PCT/GB2004/005464
(87) WO 07.07.2005. WO 2005/061463
(96) 23.12.2004. 04806258.2
(97) 06.10.2010. EP1706385B 2010/40 EN
(54) DERIVATI PIRAZOLA KAO MODULATORI PROTEIN KINAZE
PYRAZOLE DERIVATIVES AS PROTEIN KINASE MODULATORS
(73) ASTEX THERAPEUTICS LIMITED, 436 Cambridge Science Park, Milton Road, Cambridge CB4 0QA, GB; CANCER RESEARCH TECHNOLOGY LIMITED, Sardinia House, Sardinia Street, London WC2A 3NL, GB; THE INSTITUTE OF CANCER RESEARCH:ROYAL CANCER HOSPITAL, 123 Old Brompton Road, London SW7 3RP, GB
(72) BERDINI, Valerio, 436 Cambridge Science Park, Milton Road, Cambridge CB4 0QA, GB; SAXTY, Gordon, 436 Cambridge Science Park, Milton Road, Cambridge CB4 0QA, GB; VERDONK, Marinus, Leendert, 436 Cambridge Science Park, Milton Road, Cambridge CB4 0QA, GB; WOODHEAD, Steven, John, 436 Cambridge Science Park, Milton Road, Cambridge CB4 0QA, GB; WYATT, Paul, Graham, Div. of Biological Chemistry & Molecular Biology, Uni. of Dundee, Dow Street, Dundee DD1 5EH, GB; BOYLE, Robert, George, 30 Catharine Street, Cambridge CB1 3AW, GB; SORE, Hannah, Fiona, 436 Cambridge Science Park, Milton Road, Cambridge CB4 0QA, GB; WALKER, David, Winter, 436 Cambridge Science Park, Milton Road, Cambridge CB4 0QA, GB; COLLINS, Ian, Cancer Research UK, 15 Cotswold Road, Sutton SM2 5NG, GB; DOWNHAM, Robert, 436 Cambridge Science Park, Milton Road, Cambridge CB4 0QA, GB; CARR, Robin, Arthur, Ellis, 436 Cambridge Science Park, Milton Road, Cambridge CB4 0QA, GB
(74) POPOVIĆ, Srđa i ost., Takovska 19, 11000 Beograd, RS
(57) Jedinjenje formule (I): ili njegova so, solvat, tautomer ili N-oksid; u kome, A je zasićena ugljovodonična linker grupa koja sadrži od 1 do 7 atoma ugljenika, pri čemu linker grupa ima maksimalnu dužinu lanca od 5 atoma koji se pruža između R^1 i NR^2R^3 i maksimalnu dužinu lanca od 4 atoma koji se pruža između E i NR^2R^3, pri čemu jedan od atoma ugljenika u linker grupi mogu biti izborno zamenjeni atomom kiseonika ili azota; i pri čemu atomi ugljenika linker grupe A mogu izborno da nose jedan ili više supstituenata koji su izabrani od okso, fluora i hidroksida, uz uslov da se hidroksi grupa kada je prisutna ne nalazi na atomu ugljenika α u odnosu na NR^2R^3 grupu i uz uslov da se okso grupa kada je prisutna nalazi na atomu ugljenika α u odnosu na NR^2R^3 grupu; E je monociklična, biciklična karbociklična ili heterociklična grupa u kojoj, E je nesupstituisan ili ima do 4 supstituenta R^8 izabrana iz grupe koju čine hidroksi, okso (kada je E nearomatičan), hlor, brom, trifluorometil, cijano, C_{1-4} hidrokarbiloksi i C_{1-4} hidrokarbil izborno supstituisan sa C_{1-2} alkoksi ili hidroksil; R^1 je aril ili heteroaril grupa koja je nesupstituisana ili nosi jedan ili više supstituenata koji su izabrani iz grupe koju čine hidroksi; C_{1-4} aciloksi; fluor; hlor; brom; trifluorometil; cijano; $CONH_2$; nitro; C_{1-4} hidrokarbiloksi i C_{1-4} hidrokarbil, pri čemu je svaki od njih izborno supstituisan sa C_{1-2} alkoksi, karboksi ili hidroksi; C_{1-4} acilamino; benzoilamino; pirolidinokarbonil; piperidinokarbonil; morfolinokarbonil; piperazinokarbonil; pet i šesto-člane heteroaril i heteroariloksi grupe koje sadrže jedan ili dva heteroatoma izabrana od N, O i S; fenil; fenil-C_{1-4}alkil; fenil- C_{1-4} alkoksi; heteroaril- C_{1-4} alkil; heteroaril- C_{1-4} alkoksi i fenoksi, pri čemu su svaka od heteroaril, heteroariloksi, fenil, fenil- C_{1-4} alkil, fenil- C_{1-4} alkoksi, heteroaril-C_{1-4} alkil, heteroaril-C_{1-4} alkoksi i fenoksi grupa izborno supstituisana sa 1, 2 ili 3 supstituenata koji su izabrani iz grupe koju čine C_{1-2} aciloksi, fluor, hlor, brom, trifluorometil, cijano, $CONH_2$, C_{1-2} hidrokarbiloksi i C_{1-2} hidrokarbil, gde je svaki od njih izborno supstituisan sa metoksi ili hidroksil; R^2 i R^3 nezabvisno su izabrani iz grupe koju čine vodonik, C_{1-4} hidrokarbil i C_{1-4} acil, pri čemu su hidrokarbil i acil grupe izborno supstituisane sa jednim ili više supstituenata koji su izabrani iz grupe koju čine fluor, hidroksi, amino, metilamino, dimetilamino i metoksi; ili R^2 i R^3 zajedno sa atomom azota za koji su vezani formiraju cikličnu grupu koja je izabrana od imidazol grupe i zasićene monociklične heterociklične grupe koja ima 4-7 članova u prstenu i izborno sadrži drugi heteroatom kao član prstena izabran od O i N; ili jedan od R^2 i R^3 zajedno sa atomom azota za koji su vezani i jednim ili više atoma iz linker grupe A formiraju zasićenu monocikličnu heterocikličnu grupu koja ima 4-7 članova u prstenu i izborno sadrži drugi heteroatom kao član prstena izabran od O i N; ili NR^2 R^3 i atom ugljenika linker grupe A za koji je vezan zajedno formiraju cijano grupu; R^4 je izabran iz grupe koju čine vodonik, halogen, C_{1-5} zasićeni hidrokarbil, C_{1-5} zasićeni hidrokarbiloksi, cijano i CF_3; I R^5 je izabran iz grupe koju čine vodonik, halogen, C_{1-5} zasićeni hidrokarbil, C_{1-5} zasićeni hidrokarbiloksi, cijano, $CONH_2$, $CONHR^9$, CF_3, NH_2, $NHCOR^9$ ili $NHCONHR^9$; R^9 je grupa R^{9a} ili $(CH_2)R^{9a}$, u

kojoj, R^{9a} je monociklična ili biciklična grupa koja može biti karbociklična ili heterociklična; karbociklična grupa ili heterociklična grupa R^{9a} izborno je supstituisana sa jednim ili više supstituenata koji su izabrani iz grupe koju čine halogen, hidroksi, trifluorometil, cijano, nitro, karboksi, amino, mono- ili di-C_{1-4} hidrokarbilamino; grupa R^a-R^b u kojoj, R^a je veza, O, CO, $X^1C(X^2)$, $C(X^2)X^1$ $X^1C(X^2)X^1$, S, SO, SO_2, NR^c, SO_2NR^c ili NR^cSO_2; i R^b je izabran iz grupe koju čine vodonik, heterociklične grupe koje imaju od 3 do 12 članova u prstenu, i C_{1-8} hidrokarbil grupa izborno supstituisana sa jednim ili više supstituenata koji su izabrani iz grupe koju čine hidroksi, okso, halogen, cijano, nitro, karboksi, amino, mono- ili di-C_{1-4} hidrokarbilamino, karbociklične i heterociklične grupe koje imaju od 3 do 12 članova u prstenu i pri čemu jedan ili više atoma ugljenika C_{1-8} hidrokarbil grupe mogu izborno biti zamenjeni sa O, S, SO, SO_2, NR^C, $X^1C(X^2)$, $C(X^2)X^1$ ili $X^1C(X^2)X^1$; R^C je izabran od vodonika i C_{1-4} hidrokarbila; i X^1 je O, S ili NR^C i X^2 je =O, =S ili $=NR^C$.
Prijava sadrži još 54 zavisna patentna zahteva.

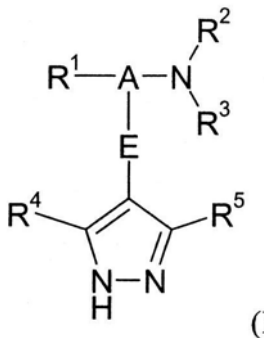

(I)

(51) ***C 07 D 249/18*** (2006.01) **(11) 51543**
C 07 D 401/06 (2006.01) **(13) B**
C 07 D 403/06 (2006.01)
A 61 K 31/4192 (2006.01)
A 61 P 3/10 (2006.01)
(21) P-2005/0207 (22) 27.09.2003.
(43) 03.08.2007.
(30) DE 12.10.2002. 102 47 680.2
(86) WO 27.09.2003. PCT/EP2003/010765
(87) WO 29.04.2004. WO 2004/03555 A1
(54) NOVI BICIKLIČNI INHIBITORI HORMON SENZITIVNE LIPAZE
NOVEL BICYCLIC INHIBITORS OF HORMONE SENSITIVE LIPASE
(73) SANOFI-AVENTIS DEUTSCHLAND GmbH, Brüningstrasse 50, 65929 Frankfurt, DE
(72) PETRY, Stefan, Johannesallee 12, 65929 Frankfurt, DE; BARINGHAUS, Karl-Heinz, Weingartenstrasse 31, 61200 Wölfersheim, DE; TENNAGELS, Norbert, Albert-Blank-Str. 38, 65931 Frankfurt, DE; MUELLER, Guenter, Im Haindell 1b, 65843 Sulzbach, DE; HEUER, Hubert, Am Sportfeld 74, 55270 Schwabenheim, DE
(74) POPOVIĆ, Srđa i ost., Takovska 19, 11000 Beograd, RS
(57) Benzotriazoli opšte formule I, **naznačeni time**, što u njima označavaju: Rl do R8 H, pri tome jedan od ovih ostataka R2 ili R3 može da stoji na mestu za: Br, Cl, CH_3, CN, NH_2, NO_2, CF_3, OCH_3, fenoksi. benzoil, CH(OH)-fenil, S-cikloheksil, CO-OCH_3; ili dva supstituenta iz ovog niza su: Rl =C1 i R3 = CF_3 ili R2 = F i R3 = Cl; n jedan ceo broj 0, 1 ili 2; i jedan od supstituenata R6 ili R7 može da stoji na mestu za: R6 CH_3; R7 CH_3, C_2H_5; $CH(CH_3)_2$, $C(CH_3)_3$. CF_3. Br, Cl, benzoil ili CO-OC_2H_5; ili R6 i R7 oba ostatka su CH_3; ili prsten umesto R6 i R7 može da sadrži jednu duplu vezu ili R5 i R6 ili R6 i R7 zajedno sa C-atomima na kojima se oni nalaze stoji na mestu za jedan prsten pripojen na benzen ili ukoliko je n = 0, može da stoji na mestu za cikloheksandiil, pri tome u slučaju zatvaranja prstena R6/R7 ovaj supstituent može u datom slučaju da bude supstituisan jednom sa NH_2 ili NO_2 ili jednom do dva puta sa OCH_3; i R7 i R8 zajedno ciklopentil, diazirin ili $=CH_2$; pri tome su izuzeta jedinjenja sa Rl do R5 i R8 = H, n = 1 i R6/R7 = spojen na benzen i R1,R3 -R8 = H, R2 = CH_3 i n = 1.
Prijava sadrži još 11 patentnih zahteva.

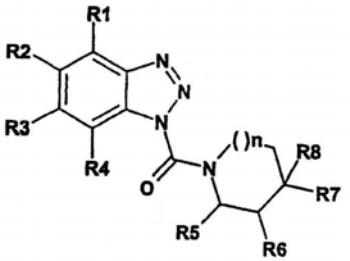

I

(51) ***C 07 D 261/12*** (2006.01) **(11) 51517**
A 61 P 19/02 (2006.01) **(13) B**
A 61 K 31/42 (2006.01)
(21) P-2010/0522 (22) 25.05.2007.
(30) JP 26.05.2006. 2006146220
(86) WO 25.05.2007. PCT/JP2007/060670
(87) WO 06.12.2007. WO 2007/138996
(96) 25.05.2007. 07744104.6
(97) 01.09.2010. EP2022788B 2010/35 EN
(54) NOVI KRISTAL 3-[5-[4-(CIKLOPENTILOKSI]-2-HIDROKSIBENZOIL]-2-[(3-HIDROKSI-1, 2-BENZISOKSAZOL-6-IL)METOKSI]FENIL] PROPIONSKE KISELINE
NOVEL CRYSTAL OF 3-[5-[4-(CYCLOPENTYLOXY]-2-HYDROXYBENZOYL]-2-[(3-HYDROXY-1, 2-BENZISOXAZOL-6-YL)METHOXY]PHENYL] PROPIONIC ACID
(73) TOYAMA CHEMICAL CO., LTD., 2-5, 3-chome, Nishishinjuku, Shinjuku-ku, Tokyo 160-0023, JP

(72) YONEZAWA, Kenji, c/o TOYAMA CHEMICAL CO., LTD., Toyama Works 4-1, Shimookui 2-chome, Toyama-shi, Toyama 9308508, JP; KOTSUBO, Hironori, c/o TOYAMA CHEMICAL CO., LTD., Toyama Works 4-1, Shimookui 2-chome, Toyama-shi, Toyama 9308508, JP; BABA, Yasutaka, c/o TOYAMA CHEMICAL CO., LTD., Toyama Works 4-1, Shimookui 2-chome, Toyama-shi, Toyama 9308508, JP; TADA, Yukie, c/o TOYAMA CHEMICAL CO., LTD., Toyama Works 4-1, Shimookui 2-chome, Toyama-shi, Toyama 9308508, JP
(74) PETOŠEVIĆ DOO, Vele Nigrinove 16a, 11000 Beograd, RS
(57) Kristal 3-{5-[4-(ciklopentiloksi)-2-hidroksibenzoil]-2-[(3-hidroksi-l,2-benzisoksazol-6-il)metoksi]fenil} propionske kiseline sa vršnim vrednostima na pozicijama 14.0, 16.0, 23.3, 23.7 i 26.3º pri uglu 2Ø difrakcije na slici rentgenske difrakcije praha.
Prijava sadrži još 1 zavisni patentni zahtev.

---

(51) ***C 07 D 263/32*** (2006.01) **(11) 51547**
A 61 K 31/421 (2006.01) **(13) B**
C 07 D 277/30 (2006.01)
A 61 K 31/426 (2006.01)
(21) P-2010/0563 (22) 08.08.2006.
(30) GB 08.08.2005. 0516313
(86) WO 08.08.2006. PCT/GB2006/002956
(87) WO 15.02.2007. WO 2007/017669
(96) 08.08.2006. 06765253.7
(97) 20.10.2010. EP1924570B 2010/42 EN

(54) DERIVATI AZOLA I TIAZOLA I NJIHOVO KORIŠĆENJE

AZOLE AND THIAZOLE DERIVATIVES AND THEIR USE

(73) PULMAGEN THERAPEUTICS (SYNERGY) LIMITED, 8/9 Spire Green Centre Flex Meadow Harlow, Essex CM19 5TR, GB
(72) RAY, Nicholas, Charles, Argenta Discovery Ltd., 8/9 Spire Green Centre Flex Meadow Harlow, Essex CM19 5TR, GB; BULL, Richard, James, Argenta Discovery Ltd., 8/9 Spire Green Centre Flex Meadow Harlow, Essex CM19 5TR, GB; FINCH, Harry, Argenta Discovery Ltd., 8/9 Spire Green Centre Flex Meadow Harlow, Essex CM19 5TR, GB; VAN DEN HEUVEL, Marco, Argenta Discovery Ltd., 8/9 Spire Green Centre Flex Meadow Harlow, Essex CM19 5TR, GB; BRAVO, Jose, Antonio, Argenta Discovery Ltd., 8/9 Spire Green Centre Flex Meadow Harlow, Essex CM19 5TR, GB
(74) RISTIĆ, Dragoslav i ost., Cara Lazara 7, 11000 Beograd, RS
(57) Jedinjenje formule (I): **naznačeno time** da (i) R^1 je C_1-C_6-alkil ili vodonik; i R^2 je vodonik ili grupa -R^7, -Z-Y-R^7, -Z-NR^9R^{10}; -Z-CO-NR^9R^{10}, -Z-NR^9-C(O)O-R^7, ili -Z-C(O)-R^7; i R^3 je nespareni par, ili C_1-C_6-alkil; ili (ii) R^1 i R^3 zajedno sa azotom na kojeg su vezani formiraju heterocikloalkil prsten, i R^2 je nespareni par ili grupa -R^7, -Z-Y-R^7, -Z-NR^9A^{10}, -Z-CO-NR^9R^{10}, -Z-NR^9-C(O)O-R^7; ili -Z-C(O)-R^7; ili (iii) R^1 i R^2 zajedno sa azotom na kojeg su vezani formiraju heterocikloalkil prsten, pomenuti prstenje po izboru supstituisan sa grupom -Y-R^7, -Z-Y-R^7, -Z-NR^9R^{10}; -Z-CO-NR^9R^{10}; -Z-NR^9-C(O)O-R^7; ili -Z-C(O)-R^7; i R^3 je nespareni par, ili C_1-C_5-alkil; kombinacije R4 i R5 su one u čemu (i) svaki od R4 i R5 je monociklični heteroaril sa 5 ili 6 atoma u prstenu; (ii) svaki od R4 i R5 je fenil; (iii) jedan od R4 i R5 je fenil i drugi je cikloalkil; i (iv) jedan od R4 i R5 je monociklični heteroaril sa 5 ili 6 atoma u prstenu i drugi je cikloalkil; R^6 je -OH, C_1-C_6-alkil, C_1-C_6-alkoksi, hidroksi-C_1-C_6-alkil, nitril, grupa $CONR^8{}_2$ ili atom vodonika; A je kiseonik ili atom sumpora; X je alkilen, alkenilen ili alkinilen grupa; R^7 je C_1-C_6-alkil, aril, aril-fuzionisani na-cikloalkil, aril-fuzionisani na-heterocikloalkil, heteroaril, aril(C_1-C_6-alkil)-, heteroaril(C_1-C_6-alkil)-, cikloalkil ili heterocikloalkil grupa; R^8 je C_1-C_6-alkil ili atom vodonika; Z je C_1-C_{16}-alkilen, C_2-C_{16}-alkenilen ili C_2-C_{16}-alkinilen grupa; Y je veza ili atom kiseonika; R^9 i R^{10} su nezavisno atom vodonika, C_1-C_6-alkil, aril, aril-fuzionisani na-heterocikloalkil, aril-fuzionisani na-cikloalkil, heteroaril, aril(C_1-C_6-alkil)- ili heteroaril(C_1-C_6-alkil)- grupa; ili R^9 i R^{10} zajedno sa atomom azota na kojeg su vezani formiraju heterociklični prsten sa 4-8 atoma, koji po izboru sadrži još jedan atom azota ili kiseonika; u čemu bilo koja aril, heteroaril, cikloalkil, aril-fuzionisani na-cikloalkil, heterocikloalkil, i aril-fuzionisani na-heterocikloalkil grupa može da bude supstituisana sa jednom ili više supstituentskih grupa odabranih između acil, alkoksi, alkoksikarbonil, alkilamino, alkilsulfmil, alkilsulfonil, alkiltio, -NH_2, aminoacil, aminoalkil, alkilaminoalkil, arilalkil, cijano, dialkilamino, halo, haloalkoksi, haloalkil, alkil, -OH, - CHO, -COOH, -NO_2, aril (po izboru supstituisan sa alkoksi, haloalkoksi, halogen, alkil ili haloalkil), heteroaril (po izboru supstituisan sa alkoksi, haloalkoksi, halogen, alkil ili hatoalkil), heterocikloalkil, aminoacil, aminosulfonil, acilamino, sulfonilamino, heteroarilalkil, ciklični amin, ariloksi, heteroariloksi, arilalkiloksi i heteroarilalkiloksi; ili farmaceutski prihvatljiva so, solvat ili N-oksid od toga.
Prijava sadrži još 39 zavisnih patentnih zahteva.

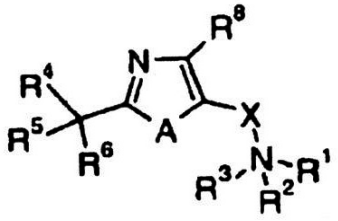

(I)

---

(51) ***C 07 D 285/08*** (2006.01) **(11) 51530**
C 07 D 417/12 (2006.01) **(13) B**
A 61 K 31/433 (2006.01)
A 61 P 3/00 (2006.01)
A 61 P 17/00 (2006.01)
A 61 P 25/00 (2006.01)
(21) P-2004/0397 (22) 04.11.2002.
(43) 27.10.2006.
(30) US 08.11.2001. 60/337, 927
(86) WO 04.11.2002. PCT/US02/35340
(87) WO 15.05.2003. WO 03/040117 A1

(54) NOVI 1, 2, 4-TIADIAZOLIJUM DERIVATI KAO MODULATORI MELANOKORTINSKOG RECEPTORA
NOVEL 1, 2, 4-THIADIAZOLE DERIVATIVES AS MELANOCORTIN RECEPTOR MODULATORS

(73) ORTHO-MCNEIL PHARMACEUTICAL INC., US Route 202, Raritan, NJ 08869, US
(72) EISINGER, Magdalena, 30 Pine Terrace, Demarest, NJ 07627, US; FITZPATRICK, Louis, J., 205 Heatherfield Drive, Souderton, PA 18964, US; LEE, Daniel, H., 361 Dutton Road, Sudbury, MA 01776, US; PAN, Kevin, 409 Greene Lane, Phoenixville, PA 19460, US; PLATA-SALAMAN, Carlos, 1313 Squire Drive, Ambler, PA 19002, US; REITZ, Allen, B., 109 Greenbriar Road, Lansdale, PA 19466, US; SMITH-SWINTOSKY, Virginia, L., 3163 Line Lexington Road, Hatfiled, PA 19440, US; ZHAO, Boyu, 105 Weymouth Circle, 105 Weymouth Circle, US
(74) MIKIJELJ, Rade i ost., Vlajkovićeva 28, 11000 Beograd, RS

(57) Jedinjenje formule (II) za upotrebu u lečenju poremećaja posredovanog receptorom melanokortina, a naročito melanokortin-3 receptora, melanokortin-4 receptora ili melanokortin-5 receptora, kao što je metabolički poremećaj, CNS poremećaj ili dermatološki poremećaj, na primer gojaznost, neusaglašena oralna tolerancija prema glukozi, povišeni sadržaji glukoze u krvi, dijabetes tipa II, sindrom X, dijabetska retinopatija, akutni neurodegenerativni poremećaji, hronični neurodegenerativni poremećaji, pleksopatija, erektivna disfunkcija kod muškaraca, suve oči, akne, suva koža, ostarela koža, seboreični dermatitis, crvenilo, višak cerumena, poremećaji Meibomiusove žlezde, pseudofolikulitis, infekcije kvascima, perut, hidradenitis suppurativa, crvenilo očiju ili poremećaj žlezde sa spoljašnjim lučenjem, a naročito gojaznost, neusaglašena oralna tolerancija prema glukozi, povišeni sadržaji glukoze u krvi, dijabetes tipa II, sindrom X, akne, suva koža ili seboreični dermatitis gde R^1 je heteroaril, heteroaril-alkil, heterocikloalkil, heterocikloalkil-alkil, cikloalkil, cikloalkil-alkil, supstituisani aril ili supstituisani aralkil, gde su heteroaril, heteroaril-alkil, heterocikloalkil, heterociklolakil-alkil, cikloalkil ili cikloalkil-alkil grupe opciono nezavisno supstituisane sa jednim ili više supstituenta halogen, hidroksi, alkil, alkoksi, halogenovani alkil, halogenovani alkoksi, amino, alkilamino ili di(alkil)amino, gde je aril ili aralkil grupa nezavisno supstituisana sa jednim ili više supstituenata halogen, hidroksi, alkil, alkoksi, halogenovani alkil, halogenovani alkoksi, amino, alkilamino ili di(alkil)amino; i ili R^2 je heteroaril, heteroaril-alkil, heterocikloalkil, heterocikloalkil-alkil, cikloalkil, cikloalkil-alkil, supstituisani aril ili supstituisani aralkil, gde su heteroaril, heteroaril-alkil, heterocikloalkil, heterociklolakil-alkil, cikloalkil ili cikloalkil-alkil grupe opciono nezavisno supstituisane sa jednim ili više supstituenata halogen, hidroksi, alkil, alkoksi, halogenovani alkil, halogenovani alkoksi, amino, alkilamino ili di(alkil)amino; gde je aril ili aralkil grupa nezavisno supstituisana sa jednim ili više halogen, hidroksi, alkil, alkoksi, halogenovani alkil, halogenovani alkoksi, amino, alkilamino ili di(alkil)amino; i R^4 je aril, aralkil, heteroaril, heterocikloalkil ili cikloalkil-alkil; gde su aril, aralkil, heteroaril, heterocikloalkil ili cikloalkil-alkil grupe opciono nezavisno supstituisane sa jednim ili više supstituenata halogen, hidroksi, alkil, alkoksi, halogenovani alkil, halogenovani alkoksi, amino, alkilamino ili di(alkil)amino; ili R^2 je aril, aralkil, heteroaril, heteroaril-alkil, heterocikloalkil, heterocikloalkil-alkil, cikloalkil ili cikloalkil-alkil, gde aril, aralkil, heteroaril, heteroaril-alkil, heterocikloalkil, heterocikloalkil-alkil, cikloalkil ili cikloalkil-alkil grupe su opciono nezavisno supstituisane sa jednim ili više supstituenata halogen, hidroksi, alkil, alkoksi, halogenovani alkil, halogenovani alkoksi, amino, alkilamino ili di(alkil)amino, i R^4 je heteroaril, heterocikloalkil, cikloalkil-alkil, supstituisani aril ili supstituisani aralkil, gde heteroaril, heterocikloalkil, ili cikloalkil-alkil grupe su opciono nezavisno supstituisane sa jednim ili više supstituenata halogen, hidroksi, alkil, alkoksi, halogenovani alkil, halogenovani alkoksi, amino, alkilamino ili di(alkil)amino, i gde je aril ili aralkil grupa nezavisno supstiutisana sa jednim ili više supstituenata halogen, hidroksi, alkil, alkoksi, halogenovani alkil, halogenovani alkoksi, amino, alkilamino ili di(alkil)amino, i njegove farmaceutski prihvatljive soli ili solvati, gde alkil je C_{1-8}alkil; cikloalkil je C_{3-8}alkil; aralkil je arilC_{1-4}alkil heteroaril je: (i) petočlana ili šestočlana monociklična aromatična prstenasta struktura koja sadrži bar jedan heteroatom izabran iz grupe koju čine O, N i S, koji opciono sadrži jedan do tri dodatna heteroatoma nezavisno izabrana iz grupe koju čine O, N, i S vezana za bilo koji ugljenikov atom prstena tako da daju stabilnu strukturu; ili (ii) devetočlana ili desetočlana biciklična aromatična struktura prstenova koja sadrži bar jedan heteroatom izabran iz grupe koju čine O, N i S, koja opciono sadrži jedan do četiri dodatna heteroatoma nezavisno izabrana iz grupe koju čine O, N ili S vezana za bilo koji ugljenikov atom prstena tako da daju stabilnu strukturu; i heterocikloalkil je: (i) petočlana do sedmočalna monociklična, zasićena, delimično nezasićena ili delimično aromatična prstenasta struktura koja sadrži bar jedan heteroatom izabran iz grupe koju čine O, N i S, koja opciono sadrži jedan do tri dodatna heteroatoma nezavisno izabrana iz grupe koju čine O, N i S vezana za bilo koji ugljenikov atom prstena tako da daju stabilnu strukturu; ili (ii) devetočlani ili desetočlani zasićeni, delimično nezasićeni ili delimično aromatični biciklični sistem prstenova koji sadrži bar jedan heteroatom izabran iz grupe koju čine O, N i S, koji opciono sadrži bar jedan do četiri dodatna heteroatoma izabrana iz grupe koju čine O, N il S vezana za bilo koji ugljenikov atom tako da daju stabilnu strukturu.
Prijava sadrži još 7 patentnih zahteva.

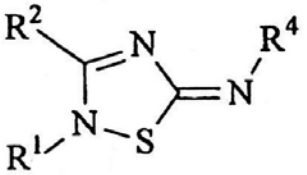

(II)

(51) ***C 07 D 285/28*** (2006.01) **(11) 51518**
A 61 P 25/00 (2006.01) **(13) B**
A 61 K 31/549 (2006.01)
(21) P-2010/0540 (22) 08.07.2009.
(30) FR 09.07.2008. 20080003898
(96) 08.07.2009. 09290547.0
(97) 15.09.2010. EP2147915B 2010/37 FR
(54) NOVI CIKLOALKILOVANI DERIVATI BENZOTIADIAZINA, POSTUPAK NJIHOVE PROIZVODNJE I FARMACEUTSKE SMEŠE KOJE IH SADRŽE
NEW CYCLOALKYLATED BENZOTHIADIAZINE DERIVATIVES, METHOD OF PREPARING SAME AND PHARMACEUTICAL COMPOSITIONS CONTAINING THEM
(73) LES LABORATOIRES SERVIER, 35, rue de Verdun, 92284 Suresnes Cedex, FR
(72) FRANCOTTE, Pierre, 320, rue de l'Yser, 4430 Ans, BE; DE TULLIO, Pascal, Voie du Herdier, 4020 Liege, BE; PIROTTE, Bernard, 5, rue Tollet, 4680 Oupeye, BE; DANOBER, Laurence, 82, rue Henri Richaume, 78360 Montesson, FR; LESTAGE, Pierre, 9, allée de la Grande Terre, 78170 La Celle Saint Cloud, FR; CAIGNARD, Daniel-Henri, 17, avenue des Coteaux, 95000 Boisemont, FR
(74) PETOŠEVIĆ DOO, Vele Nigrinove 16a, 11000 Beograd, RS
(57) Jedinjenja formule (I): u kojoj: R_{Cy} predstavlja:
- cikloalkil(C_3-C_8) grupu koja je ne-supstituisana ili supstituisana sa jednom ili više istih ili različitih grupa, koje su odabrane od: linearnog ili razgranatog (C_1-C_6)alkila koji je ne-supstituisan ili je supstituisan sa jednim ili više atoma halogena; linearnog ili razgranatog (C_1-C_6)alkoksi; hidroksi; i amino koji je ne-supstituisan ili je supstituisan sa jednom ili dve linearne ili razgranate (C_1-C_6) alkil grupe; linearnu ili razgranatu (C_3-C_8)cikloalkil(C_1-$_6$)alkil grupu koja je ne-supstituisana ili supstituisana na cikličnom delu sa jednom ili više istih ili različitih grupa, koje su odabrane od: linearnog ili razgranatog (C_1-C_6)alkila koji je ne-supstituisan ili je supstituisan sa jednim ili više atoma halogena; linearnog ili razgranatog (C_1-C_6)alkoksi; hidroksi; i amino koji je ne-supstituisan ili je supstituisan sa jednom ili dve linearne ili razgranate (C_1-C_6)alkil grupe;
- R_1, R_2, R_3 i R_4, isti ili različiti, svaki predstavlja atom vodonika ili halogena ili jednu grupu: nitro; cijano; hidroksi; tio; linearni ili razgranati (C_1-C_6)alkil koji je ne-supstituisan ili je supstituisan sa jednim ili više atoma halogena; linearni ili razgranati (C_1-C_6) cijanoalkil; linearni ili razgranati (C_1-C_6)hidroksialkil; linearni ili razgranati (C_1-C_6)alkoksi koji je ne-supstituisan ili je supstituisan sa jednim ili više atoma halogena; linearni ili razgranati (C_1-C_6)alkiltio; karboksi; linearni ili razgranati (C_1-C_6)alkoksikarbonil; ariloksikarbonil; linearni ili razgranati (C_1-C_6)acil; amino koji je ne-supstituisan ili je supstituisan sa jednom ili dve linearne ili razgranate (C_1-C_6)alkil grupe ili sa linearnom ili razgranatom (C_1-C_6)acil grupom; aminokarbonil koji je ne-supstituisan ili je supstiuisan sa jednom ili dve linearne ili razgranate (C_1-C_6)alkil grupe; arilaminokarbonil; ili linearni ili razgranati (C_1-C_6)alkilsulfonilamino; njihovi enantiomeri i njihovi dijastereomeri ukoliko postoje, kao i njihove adcione soli sa farmaceutski prihvatljivom kiselinom ili bazom, pod "arilom" se podrazumeva fenil grupa koja nije supstituisana ili je supstituisana sa jednom ili više istih ili različitih grupa, odabranih od: linearnog ili razgranatog (C_1-C_6) alkila koji nije supstituisan ili je supstituisan sa jednim ili više atoma halogena; linearnog ili razgranatog (C_1-C_6)alkoksi; hidroksi; i amino koji nije supstituisan ili je supstituisan sa jednom ili dve linearne ili razgranate (C_1-C_6)alkil grupe.
Prijava sadrži još 19 zavisnih patentnih zahteva.

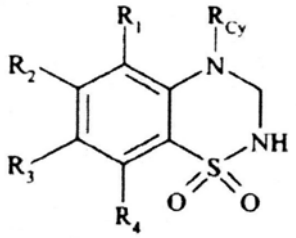

(I)

---

(51) ***C 07 D 333/38*** (2006.01) **(11) 51551**
(13) B
(21) P-2005/0241 (22) 22.09.2003.
(43) 04.06.2007.
(30) FR 24.09.2002. 02/11765
(86) WO 22.09.2003. PCT/FR2003/002775
(87) WO 08.04.2004. WO 2004/029034 A1
(54) SINTEZA ESTARA TIOFENKARBOKSILNE KISELINE ZA PROIZVODNJU SOLI RANELINSKE KISELINE
SYNTHESIS OF THIOPHENECARBOXYLIC ACID ESTERS FOR THE PRODUCTION OF RANELIC ACID SALTS
(73) LES LABORATOIRES SERVIER, 12, Place de La Défense, F-92415 Courbevoie Cedex, FR
(72) VAYSSE-LUDOT, Lucile, 150, route de Rançon, F-76490 Saint Wandrille Rançon, FR; LECOUVE, Jean-Pierre, 93, rue du Docteur Vigné, F-76600 Le Havre, FR; LANGLOIS, Pascal, 3, allée du Bassin, F-76210 Saint Jean de la Neuville, FR
(74) PETOŠEVIĆ DOO, Vele Nigrinove 16a, 11000 Beograd, RS
(57) Postupak industrijske sinteze jedinjenja prestavljenih formulom (I): u kojoj R i R', bilo da su isti ili različiti, svaki za sebe prestavljaju linearnu ili račvastu (C_1-C_6) alkil grupu **naznačen time**, što jedinjenje prestavljeno formulom (III): u kojoj je R defmisan ranije u tekstu, reaguje sajedinjenjem prestavljenim formulom (IV): u kojoj je R defmisan ranije u tekstu, u prisustvu katalitičke količine C_8-C_{10} tipa kvaternernog amonijumskog

jedinjenja. u prisustvu kalijum karbonata, uz refluktovanje sa organskim rastvaračem ; reakciona smeša se nakon toga filtrira a onda koncentruje destilacijom zatim je dodat ko-rastvarač i reakciona smeša se hladi i filtrira da bi se nakon sušenja tako dobijenog praha dobilo jedinjenje prestavljeno formulom (I), gde je jasno da je C_8-C_{10} tip kvaternernernog amonijumskog jedinjenja, predstavlja jedinjenje formule (A) ili mešavinu jedinjenja prestavljenih formulom (A): R_1R_2 R_3R_4-N^+X u kojoj R_1 prestavlja (C_1-C_6) alkil grupu, R_2 R_3 i R_4, bilo da su isti ili različiti, svaki za sebe prestavljaju (C_8-C_{10}) alikil grupu a X prestavlja atom halogena.
Prijava sadrži još 13 patentnih zahteva.

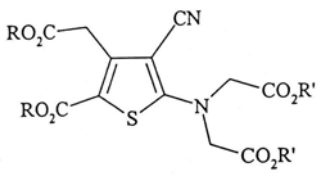

(I)

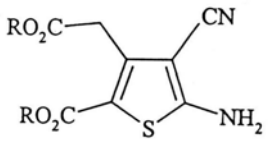

(III)

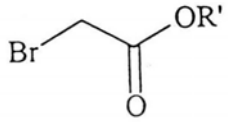

(IV)

---

(51) ***C 07 D 401/04*** (2006.01) **(11) 51548**
C 07 D 405/12 (2006.01) **(13) B**
C 07 D 417/12 (2006.01)
A 61 P 35/00 (2006.01)
C 07 D 401/14 (2006.01)
C 07 D 405/14 (2006.01)
A 61 K 31/506 (2006.01)
(21) P-2010/0439 (22) 22.01.2007.
(30) US 20.01.2006. 760789P
(86) WO 22.01.2007. PCT/US2007/001708
(87) WO 26.07.2007. WO 2007/084786
(96) 22.01.2007. 07716906.8
(97) 18.08.2010. EP1984350B 2010/33 EN
(54) DERIVATI PIRIMIDINA KOJI SE KORISTE KAO INHIBITORI PI-3 KINAZA
PYRIMIDINE DERIVATIVES USED AS PI-3 KINASE INHIBITORS
(73) NOVARTIS AG, Lichtstrasse 35, 4056 Basel, CH
(72) BURGER, Matthew, c/o Novartis Vaccines and Diagnostics INC. P.O. Box 8097, Emeryville, CA 94662-8097, US; NI, Zhi-jie, c/o Novartis Vaccines and Diagnostics INC. P.O. Box 8097, Emeryville, CA 94662-8097, US; PECCHI, Sabina, c/o Novartis Vaccines and Diagnostics INC. P.O. Box 8097, Emeryville, CA 94662-8097, US; ATALLAH, Gordana, c/o Novartis Vaccines and Diagnostics INC. P.O. Box 8097, Emeryville, CA 94662-8097, US; BARTULIS, Sarah, c/o Novartis Vaccines and Diagnostics INC. P.O. Box 8097, Emeryville, CA 94662-8097, US; FRAZIER, Kelly, c/o Novartis Vaccines and Diagnostics INC. P.O. Box 8097, Emeryville, CA 94662-8097, US; SMITH, Aaron, c/o Novartis Vaccines and Diagnostics INC. P.O. Box 8097, Emeryville, CA 94662-8097, US; VERHAGEN, Joelle, c/o Novartis Vaccines and Diagnostics INC. P.O. Box 8097, Emeryville, CA 94662-8097, US; ZHANG, Yanchen, c/o Novartis Vaccines and Diagnostics INC. P.O. Box 8097, Emeryville, CA 94662-8097, US; WAGMAN, Allan, c/o Novartis Vaccines and Diagnostics INC. P.O. Box 8097, Emeryville, CA 94662-8097, US; NG, Simon, c/o Novartis Vaccines and Diagnostics INC. P.O. Box 8097, Emeryville, CA 94662-8097, US; PFISTER, Keith, c/o Novartis Vaccines and Diagnostics INC. P.O. Box 8097, Emeryville, CA 94662-8097, US; POON, Daniel, c/o Novartis Vaccines and Diagnostics INC. P.O. Box 8097, Emeryville, CA 94662-8097, US; LOUIE, Alicia, c/o Novartis Vaccines and Diagnostics INC. P.O. Box 8097, Emeryville, CA 94662-8097, US; PICK, Teresa, c/o Novartis Vaccines and Diagnostics INC. P.O. Box 8097, Emeryville, CA 94662-8097, US; BARSANTI, Paul, c/o Novartis Vaccines and Diagnostics INC. P.O. Box 8097, Emeryville, CA 94662-8097, US; IWANOWICZ, Edwin, c/o Novartis Vaccines and Diagnostics INC. P.O. Box 8097, Emeryville, CA 94662-8097, US; FANTL, Wendy, c/o Novartis Vaccines and Diagnostics INC. P.O. Box 8097, Emeryville, CA 94662-8097, US; HENDRICKSON, Thomas, c/o Novartis Vaccines and Diagnostics INC. P.O. Box 8097, Emeryville, CA 94662-8097, US; KNAPP, Mark, c/o Novartis Vaccines and Diagnostics INC. P.O. Box 8097, Emeryville, CA 94662-8097, US; MERITI, Hanne, c/o Novartis Vaccines and Diagnostics INC. P.O. Box 8097, Emeryville, CA 94662-8097, US; VOLIVA, Charles, c/o Novartis Vaccines and Diagnostics INC. P.O. Box 8097, Emeryville, CA 94662-8097, US; WIESMANN, Marion, c/o Novartis Vaccines and Diagnostics INC. P.O. Box 8097, Emeryville, CA 94662-8097, US; XIN, Xiahua, c/o Novartis Vaccines and Diagnostics INC. P.O. Box 8097, Emeryville, CA 94662-8097, US
(74) PETOŠEVIĆ, Dušan, Kozjačka 15, 11000 Beograd, RS
(57) Jedinjenje formule I: ili njen stereoizomer, tautomer, ili farmaceutski prihvatljiva so, **naznačen time**, što W predstavlja CR_W ili N, gde je R_w odabran iz grupe koju čine:
(1) vodonik
(2) cijano,
(3) halogen,
(4) metil,
(5) trifluorometil,
(6) sulfonamido; a gde je R_1 odabran iz grupe koju čine:
(1) vodonik
(2) cijano,

(3) nitro,
(4)halogen,
(5) supstituisani i nesupstituisani alkil,
(6) supstituisani i nesupstituisani alkenil,
(7) supstituisani i nesupstituisani alkinil,
(8) supstituisani i nesupstituisani aril,
(9) supstituisani i nesupstituisani heteroaril,
(10) supstituisani i nesupstituisani heterociklil,
(11) supstituisani i nesupstituisani cikloalkil,
(12) $-COR_{1a}$,
(13) $-CO_2R_{1a}$,
(14) $-CONR_{1a}R_{1b}$,
(15) $-NR_{1a}R_{1b}$,
(16) $-NR_{1a}COR_{1b}$,
(17) $-NR_{1a}SO_2R_{lb}$,
(18) $-OCOR_{1a}$,
(19) $-OR_{la}$,
(20) $-SR_{1a}$,
(21) $-SOR_{la}$,
(22) $-SO_2R_{la}$, i
(23) $-SO_2NR_{la}R_{lb}$, gde su R_{1a} i R_{1b} svaki za sebe odabrani iz grupe koju čine:
(a) vodonik
(b) supstituisani ili nesupstituisani alkil,
(c) supstituisani i nesupstituisani aril,
(d) supstituisani i nesupstituisani heteroaril,
(e) supstituisani i nesupstituisani heterociklil, i
(f) supstituisani i nesupstituisani cikloalkil; gde je R_2 odabran iz grupe koju čine:
(1) vodonik,
(2) cijano,
(3) nitro,
(4) halogen,
(5) hidroksi,
(6) amino,
(7) supstituisani i nesupstituisani alkil,
(8) $-CO_2R_{2a}$, i
(9) $-NR_{2a}COR_{2b}$, u kojoj su R_{2a} i R_2b svaka za sebe odabrani iz grupe koju čine
(a) vodonik, i
(b) supstituisani ili nesupstituisani alkil; gde je R_3 odabran iz grupe koju sačinjavaju
(1) vodonik,
(2) cijano,
(3) nitro,
(4) halogen,
(5) supstituisani i nesupstituisani alkil,
(6) supstituisani i nesupstituisani alkenil,
(7) supstituisani i nesupstituisani alkinil,
(8) supstituisani i nesupstituisani aril,
(9) supstituisani i nesupstituisani heteroaril,
(10) supstituisani i nesupstituisani heterociklil,
(11)supstituisani i nesupstituisani cikloalkil,
(12) $-COR_{3a}$,
(13) $-NR_{3a}R_{3b}$,
(14)$-NR_{3a}COR_{3b}$,
(15)$-NR_{3a}SO_2R_{3b}$,
(16) $-OR_{3a}$,
(17) $-SR_{3a}$,
(18) $-SOR_{3a}$,
(19)$-SO_2R_{3a}$, i
(20) $-SO_2NR_{3a}R_{3b}$, gde su R_{3a} i R_{3b} svaki za sebe odabrani iz grupe koju čine:
(a) vodonik,
(b) supstituisani ili nesupstituisani alkil,
(c) supstituisani i nesupstituisani aril,
(d) supstituisani i nesupstituisani heteroaril,
(e) supstituisani i nesupstituisani heterociklil, i
(f) supstituisani i nesupstituisani cikloalkil; i gde je R_4 odabran iz grupe koju čine,
(1) vodonik, i
(2) halogen.
Prijava sadrži još 52 zavisna patentnih zahteva.

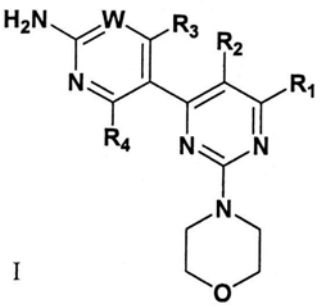

I

(51) ***C 07 D 401/12*** (2006.01) **(11) 51515**
C 07 D 211/16 (2006.01) **(13) B**
C 07 D 239/94 (2006.01)
(21) P-2010/0520 (22) 27.09.2006.
(30) GB 30.09.2005. 0519879
(96) 27.09.2006. 09152654.1
(97) 15.09.2010. EP2053048B 2010/37 EN
(54) HEMIJSKI IN SITU POSTUPAK SULFONIRANJA
CHEMICAL IN SITU SULPHONATING PROCESS
(73) ASTRAZENECA AB, 151 85 Södertälje, SE
(72) BLIXT, Jörgen, AstraZeneca R&D Södertälje, SE-151 85, Södertälje, SE; GOLDEN, Michael, David, AstraZeneca Charter Way, Macclesfield, Cheshire SK10 2NA, GB; HOGAN, Philip, John, AstraZeneca Charter Way, Macclesfield, Cheshire SK10 2NA, GB; MARTIN, David, Michael, Glanville, AstraZeneca Charter Way, Macclesfield, Cheshire SK10 2NA, GB; MONTGOMERY, Francis, Joseph, AstraZeneca Charter Way, Macclesfield, Cheshire SK10 2NA, GB; PATEL, Zakariya, AstraZeneca R&D Charnwood Bakewell Road, Loughborough, Leicestershire LE11 5RH, GB; PITTMAN, John, David, AstraZeneca Charter Way, Macclesfield, Cheshire SK10 2NA, GB; SEPENDA, George, Joseph, AstraZeneca Charter Way, Macclesfield, Cheshire SK10 2NA, GB; SQUIRE, Christopher, John, AstraZeneca Charter Way, Macclesfield, Cheshire SK10 2NA, GB; WRIGHT, Nicholas, Cartwright, Alexander, AstraZeneca Charter Way, Macclesfield, Cheshire SK10 2NA, GB

(74) RISTIĆ, Dragoslav i ost., Cara Lazara 7, 11000 Beograd, RS

(57) Postupak za dobivanje jedinjenja formule IIa: **naznačen time** što je R pogodni sulfonatni ester; iz (C_1-C_6)alkil-4-piperidinkarboksilatnog jedinjenja prema formuli III: Pri čemu postupak uključuje sledeće korake:
(a) reakciju (C_1-C_6)alkil-4-piperidinkarboksilatnog jedinjenja prema formuli III s di-terc-butil dikarbonatom uz prisutnost toluena ili ksilena koji daju prvu smešu koja sadrži toluen ili ksilen, terc-butanol i jedinjenje prema formuli IV:
(b) uklanjanje viška terc-butanola iz prve smeše;
(c) reakciju jedinjenj a prema formuli IV s pogodnim agensom za redukciju in situ uz prisutnost toluena ili ksilena koji daju drugu smešu koja sadrži toluen, redukcijske nuzproizvode uključujući alkoholne nuzproizvode i jedinjenje prema formuli V:
(d) uklanjanje viška alkoholnih nuzproizvoda iz druge smeše; i
(e) reakciju jedinjenja prema formuli V s pogodnim agensom za sulfoniranje in situ što daje sulfonatni ester uz prisutnost pogodne baze i toluena koji daju jedinjenje prema formuli IIa.
Prijava sadrži još 7 zavisnih patentnih zahteva.

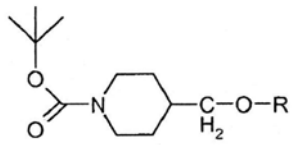

IIa

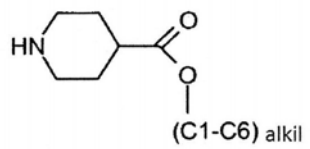

III;

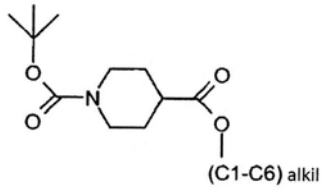

IV;

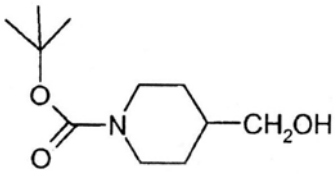

V;

(51) ***C 07 D 403/04*** (2006.01) **(11) 51557**
C 07 D 453/02 (2006.01) **(13) B**
C 07 D 409/04 (2006.01)
C 07 D 253/06 (2006.01)
C 07 D 405/04 (2006.01)
(21) P-2010/0487 (22) 21.04.2006.
(30) FR 22.04.2005. 0504042
(86) WO 21.04.2006. PCT/FR2006/000887
(87) WO 26.10.2006. WO 2006/111662
(96) 21.04.2006. 06755440.2
(97) 18.08.2010. EP1874761B 2010/33 FR

(54) DERIVATI 4H-1, 2, 4-TRIAZIN-5-ONA, NJIHOVO DOBIJANJE I NJIHOVA UPOTREBA KAO ALFA 7 NIKOTINSKIH ACETILHOLINSKIH RECEPTORA

4H-1, 2, 4-TRIAZIN-5-ONE DERIVATIVES, THEIR PREPARATION AND THEIR USE AS ALPHA 7 NICOTINIC ACETYLCHOLINE RECEPTORS

(73) AVENTIS PHARMA S.A., 20, avenue Raymond Aron, 92160 Antony, FR

(72) BENEDETTI, Yannick, 2, allée de la 2ème DB, F-93110 Rosny-sous-Bois, FR; BOHME, Andrees, 32, rue Vitruve, F-75020 Paris, FR; GENEVOIS-BORELLA, Arielle, 28, avenue Hoche, F-94320 Thiais, FR; TOUYER, Gaetan, 7 rue du Vieux Moulin, F-77500 Chelles, FR; ZHANG, Jidong, 10 rue des Frigos, F-75013 Paris, FR

(74) POPOVIĆ, Srđa i ost., Takovska 19, 11000 Beograd, RS

(57) Jedinjenje odgovarajuće formule (I) u kojoj R_1 predstavlja heteroaril ili aril grupu, date heteroaril ili aril grupe su po izboru supstituisane jednom ili više grupa koje su odabrane od atoma halogena i (C_1-C_4)alkil, (C_1-C_4)alkoksi, (C_3-C_7)cikloalkil, aril, hidroksi, cijano, -NH_2, -NO_2 grupa; R_2 predstavlja atom vodonika ili (C_1-C_4)alkil grupu; R_3 predstavlja- -(CH_2)n-NR_4R_5 grupu u kojoj n j e jednako 2, 3 ili 4 I R_4 i R_5 predstavljaju, nezavisno jedan od drugog, (C_1-C_4) alkil, ili (C_3-C_7)cikloalkil grupu, ili alternativno R_4 i R_5 obrazuju zajedno sa atomom azota za koji su vezani, (C_3-C_9)heterocikloalkil grupu; ili - -(CH_2)mR_6 grupu u kojoj m je jednako 0, 1, 2, 3 ili 4 i R_6 predstavlja (C_3-C_9)heterocikloalkil grupu koja sadrži najmanje jedan atom azota i vezana he za triazinski pristen preko atoma ugljenika, (C_3-C_9)heterocikloalkil grupa je po izboru supstituisana jednom ili više (C_1-C_4)alkil grupa; ili alternativno R_2 i R_3 obrazuju zajedno sa atomom azota za koji su vezani, (C_5-C_9)heterocikloalkil koji sadrži 2 atoma azota; pod uslovom da kada R_1 predstavlja fenil, R_4 i R_5 ne predstavljaju istovremeno metil; u obliku base ili soli sa adicionom kiselinom, kao i u obliku hidrata ili solvata.
Prijava sadrži još 14 zavisnih patentnih zahteva.

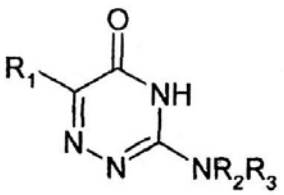

(I)

(51) *C 07 D 409/14* (2006.01) **(11) 51526**
A 61 K 31/4178 (2006.01) **(13) B**
A 61 K 31/4439 (2006.01)
A 61 K 31/496 (2006.01)
A 61 K 31/381 (2006.01)
A 61 K 31/4436 (2006.01)
A 61 K 31/444 (2006.01)
A 61 P 35/00 (2006.01)
(21) P-2010/0547 (22) 11.12.2007.
(30) US 21.12.2006. 871322P
(86) WO 11.12.2007. PCT/US2007/087046
(87) WO 26.06.2008. WO 2008/076705
(96) 11.12.2007. 07855060.5
(97) 20.10.2010. EP2125794B 2010/42 EN

(54) JEDINJENJA IMIDAZOLIDINONIL AMINOPIRIMIDINA ZA LEČENJE KANCERA

IMIDAZOLIDINONYL AMINOPYRIMIDINE COMPOUNDS FOR THE TREATMENT OF CANCER

(73) ELI LILLY & COMPANY, Lilly Corporate Center, Indianapolis, IN 46285, US

(72) LI, Hong-Yu, 1268 Sullivans Ridge, Zionsville, Indiana 46077, US; BROOKS, Harold, Burns, 515 Sapphire Drive, Carmel, Indiana 46032, US; CRICH, Joyce, Z., 8657 Meridian Square Drive, Indianapolis, Indiana 46240, US; HENRY, James, Robert, 7307 Elm Ridge Drive, Indianapolis, Indiana 46236, US; SAWYER, Jason, Scott, 5718 North Winthrop Avenue, Indianapolis, Indiana 46220, US; WANG, Yan, 11456 Senie Lane, Carmel, Indiana 46032, US

(74) POPOVIĆ, Srđa i ost., Takovska 19, 11000 Beograd, RS

(57) Jedinjenje formule: u kojoj: R^1 je aminometil, (C_1-C_3 alkil)aminometil, di(C_1-C_2 alkil aminometil, N-etil-N-metil-aminometil, 1-aminoetil, 1-((C_1-C_2 alkil)amino)-etil, 3,3,3-trifluorpropilaminometil, etinil, 2-hidroksi-etoksi, 2-hidroksietilaminometil, 2-cijanoetilaminometil, morfolin-4-ilmetil, metoksimetoksimetil, ciklopropil, 1-azetidinilmetil, 1-pirolidinilmetil, ili 1,3-dioksolan-2-il;
R^2 je vodonik ili halo;
R^3 je vodonik ili halo; pod uslovom da je jedan od -R^2 i R^3 je vodonik;
R^4 je vodonik, metil, ili halo; i ---- je jednostruka veza koja je ili prisutna ili je izostavljena, ili njegova farmaceutski prihvatljiva so.
Prijava sadrži još 9 zavisnih patentnih zahteva.

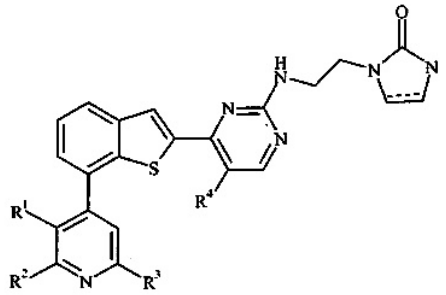

(51) *C 07 D 413/12* (2006.01) **(11) 51516**
C 07 D 487/04 (2006.01) **(13) B**
A 61 P 25/28 (2006.01)
C 07 D 413/14 (2006.01)
A 61 K 31/519 (2006.01)
C 07 D 413/06 (2006.01)
(21) P-2010/0525 (22) 15.02.2005.
(30) US 18.02.2004. 608960P
(86) WO 15.02.2005. PCT/US2005/004774
(87) WO 09.02.2006. WO 2006/014185
(96) 15.02.2005. 05802855.6
(97) 06.10.2010. EP1723144B 2010/40 EN

(54) DODATNA HETEROCIKLIČNA JEDINJENJA I NJIHOVO KORIŠĆENJE KAO ANTAGONISTA METABOTROPNIH RECEPTORA GLUTAMATA

ADDITIONAL HETEROPOLYCYCLIC COMPOUNDS AND THEIR USE AS METABOTROPIC GLUTAMATE RECEPTOR ANTAGONISTS

(73) ASTRAZENECA AB, 151 85 Södertälje, SE

(72) EDWARDS, Louise, NPS Allelix Corp., 6850 Goreway Drive, Mississauga, Ontario L4V 1V7, CA; ISAAC, Methvin, NPS Allelix Corp., 6850 Goreway Drive, Mississauga, Ontario L4V 1V7, CA; JOHANSSON, Martin, AstraZeneca R&D Headquarters, Global Int. Property, 151 85 Södertälje, SE; KERS, Annika, AstraZeneca R&D Headquarters, Global Int. Property, 151 85 Södertälje, SE; MALMBERG, Johan, AstraZeneca R&D Headquarters, Global Int. Property, 151 85 Södertälje, SE; MCLEOD, Donald, NPS Pharmaceuticals, Inc., 383 Colorow Drive, Salt Lake City, UT 84108, US; MINIDIS, Alexander, Astrazeneca R&D Headquarters, Global Int. Property, 151 85 Södertälje, SE; STAAF, Karin, Astrazeneca R&D Headquarters, Global Int. Property, 151 85 Södertälje, SE; SLASSI, Abdelmalik, NPS Allelix Corp., 6850 Goreway Drive, Mississauga, Ontario L4V 1V7, CA; STEFANAC, Tomislav, NPS Allelix Corp., 6850 Goreway Drive, Mississauga, Ontario L4V 1V7, CA; STORMANN, Thomas, NPS Pharmaceuticals, Inc., 383 Colorow Drive, Salt Lake City, UT 84108, US; WENSBO, David, AstraZeneca R&D Headquarters, Global Int. Property, 151 85 Södertälje, SE; XIN, Tao, NPS Allelix Corp. 101 College St., 8th FI, Toronto, Ontario M5G 1L8, CA; ARORA, Jalaj, NPS Allelix Corp. 101 College St., 8th FI, Toronto, Ontario M5G 1L8, CA

(74) RISTIĆ, Dragoslav i ost., Cara Lazara 7, 11000 Beograd, RS

(57) Jedinjenje ili farmaceutski prihvatljiva so od toga, **naznačeni time** da su odabrani iz grupe koja se sastoji od jedinjenja predstavljenih u sledećoj tabeli:
Prijava sadrži još 16 zavisnih patentnih zahteva.

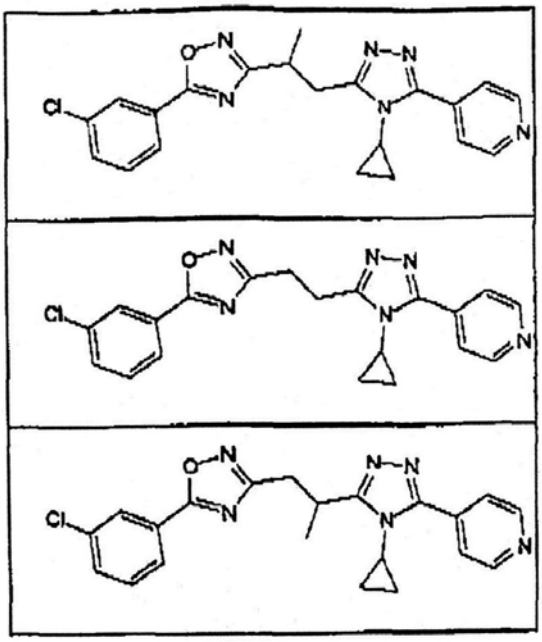

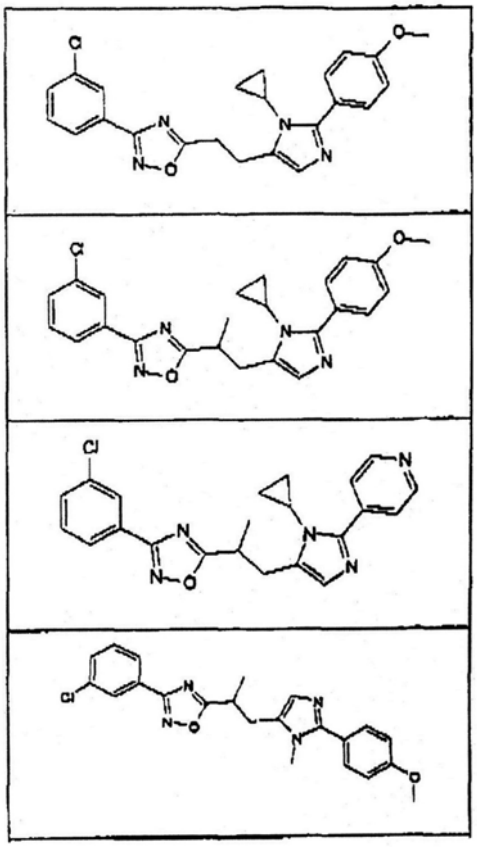

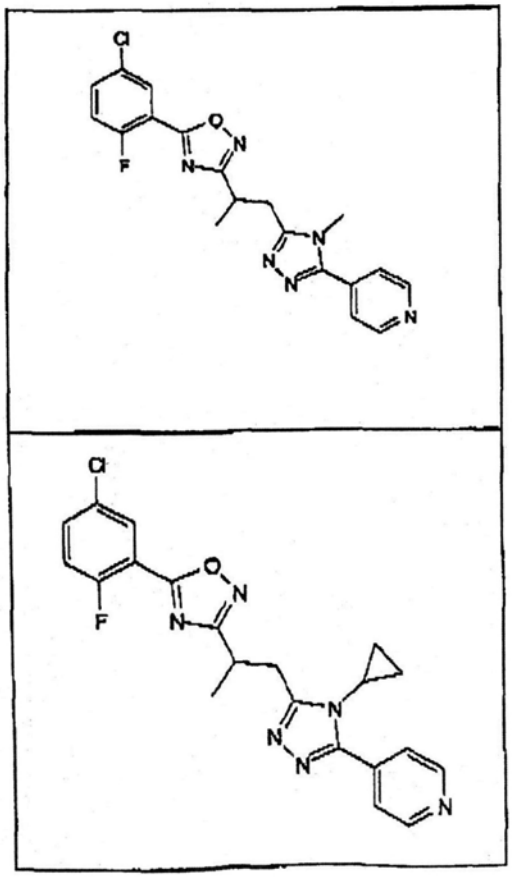

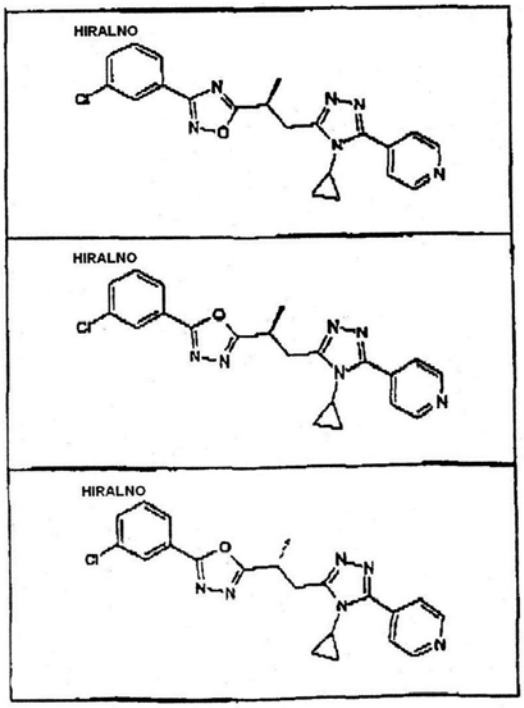
HIRALNO
HIRALNO
HIRALNO

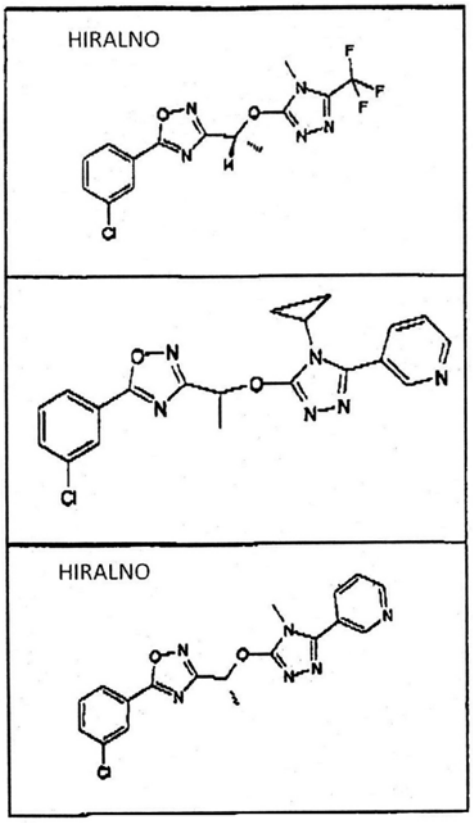
HIRALNO
HIRALNO

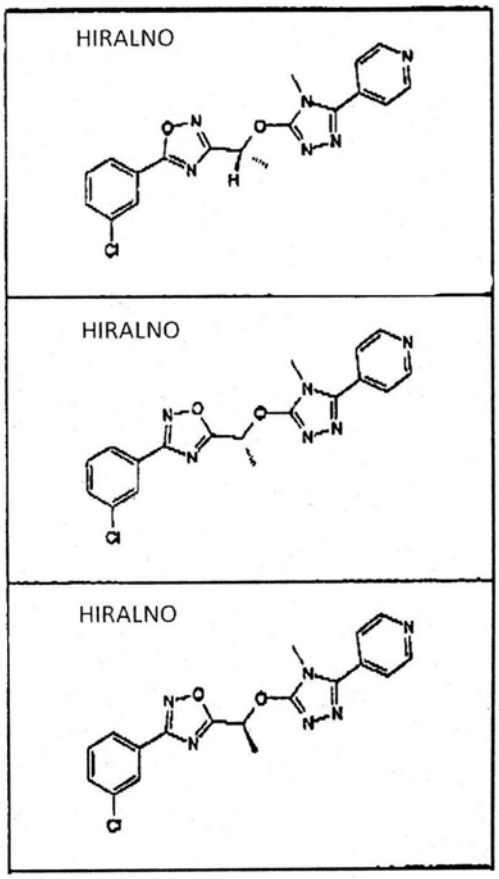
HIRALNO
HIRALNO
HIRALNO

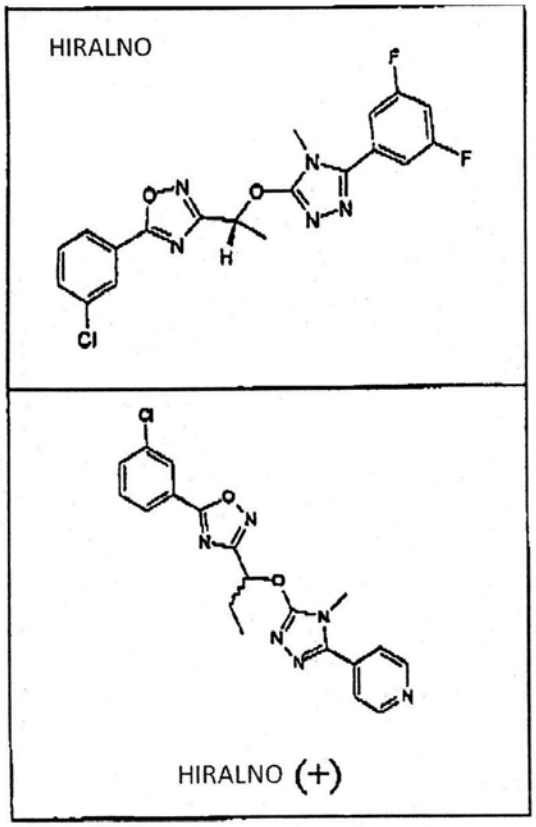
HIRALNO
HIRALNO (+)

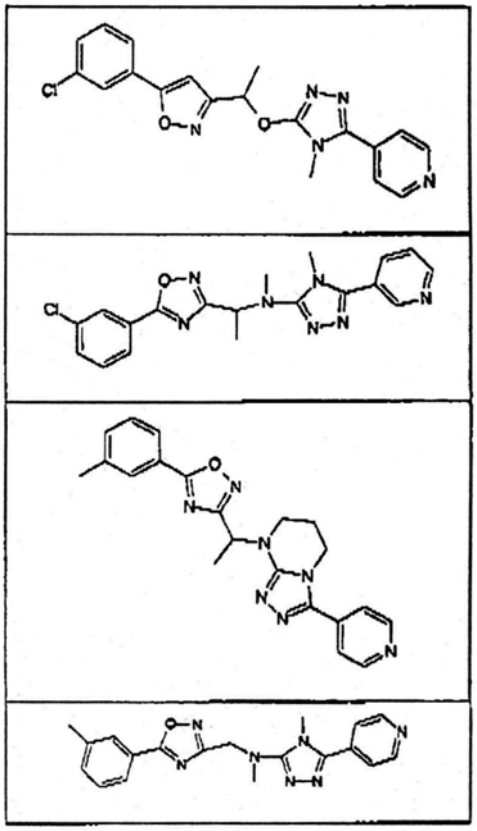

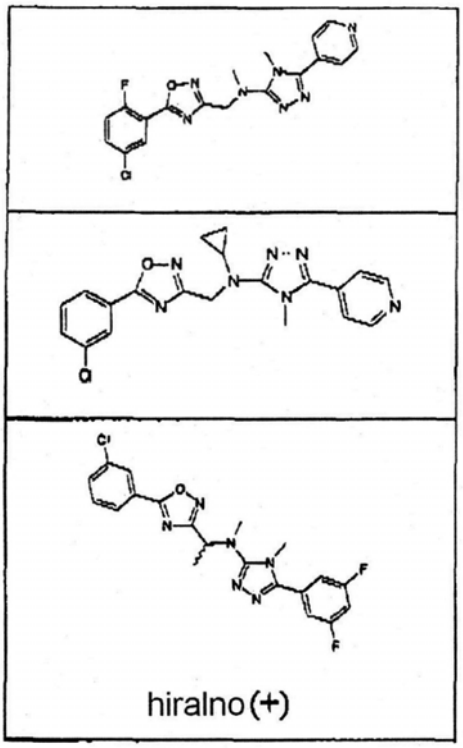
hiralno (+)

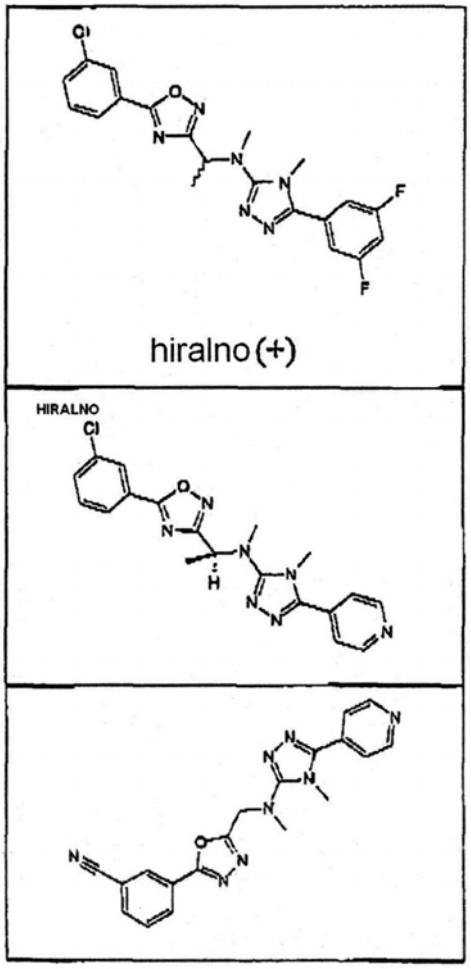
hiralno (+)
HIRALNO

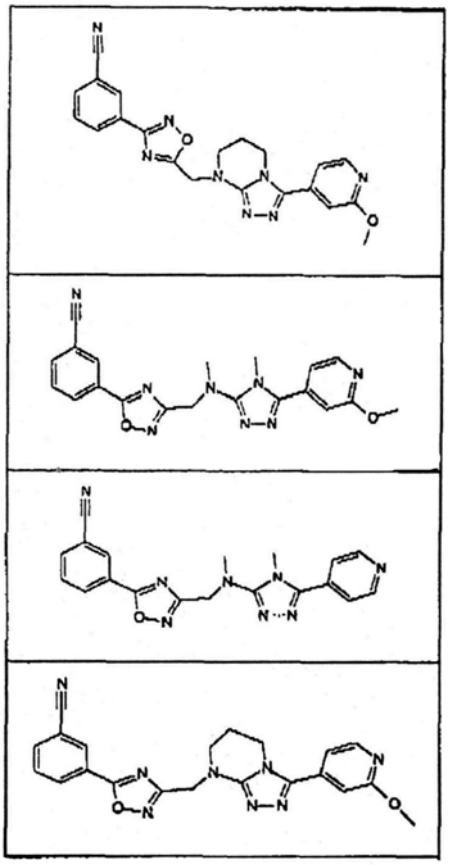

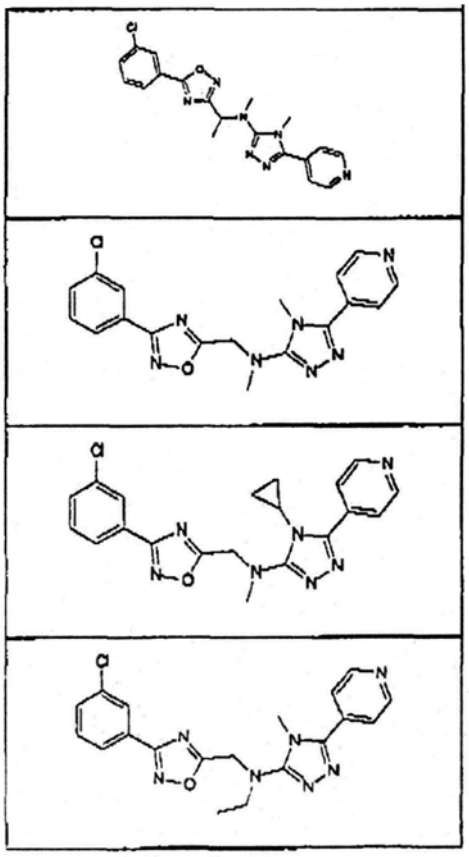

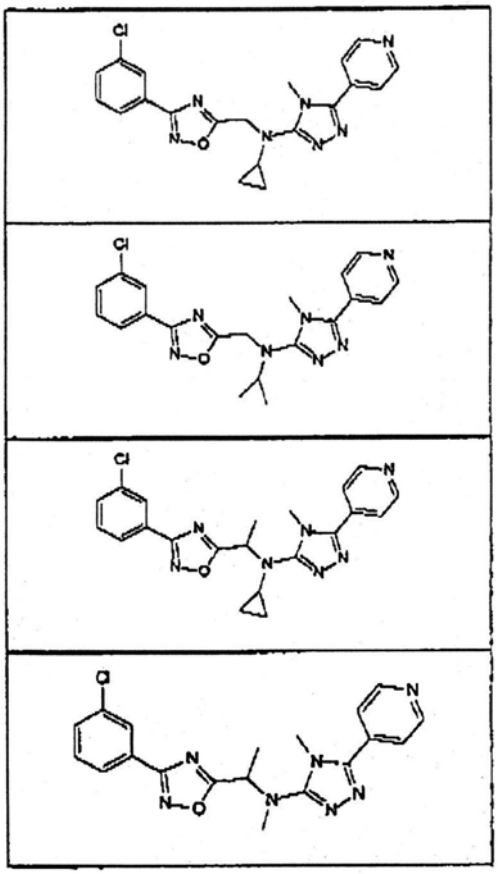

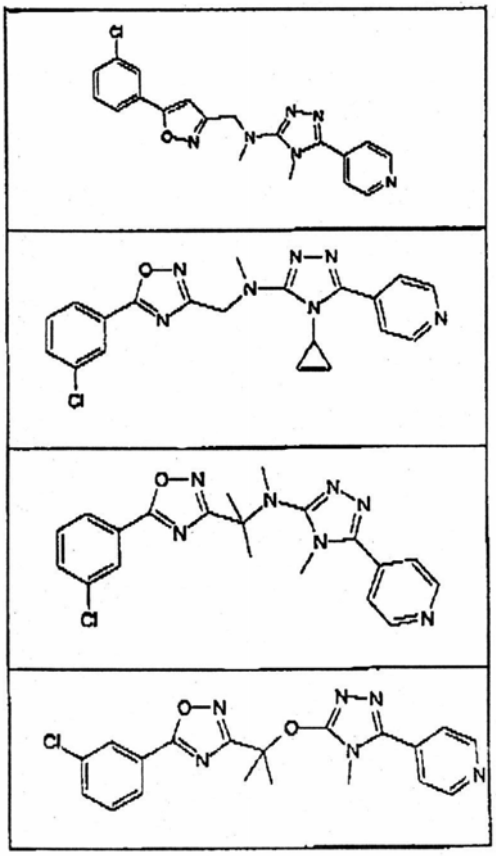

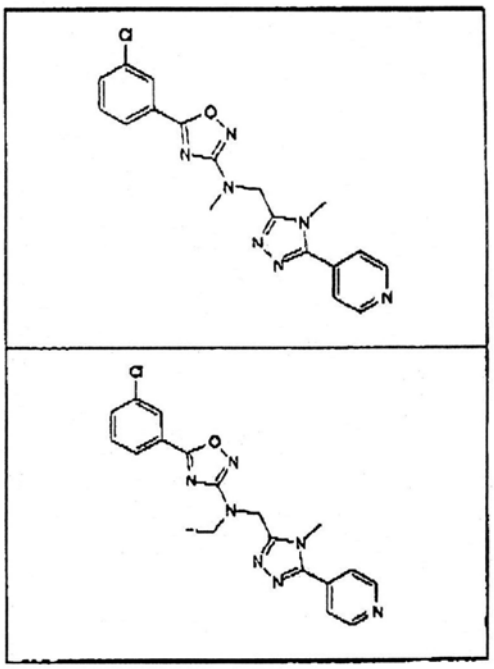

(51) ***C 07 D 451/04*** (2006.01) **(11) 51550**
A 61 K 31/46 (2006.01) **(13) B**
A 61 P 29/00 (2006.01)
(21) P-2004/0888 (22) 31.03.2003.
(43) 15.12.2006.
(30) GB 08.04.2002. 0208071.1
GB 23.01.2003. 0301575.7
(86) WO 31.03.2003. PCT/IB03/01220
(87) WO 16.10.2003. WO 03/084954 A1

(54) DERIVATI TROPANA KAO MODULATORI CCR5

TROPANE DERIVATIVES AS CCR5 MODULATORS

(73) PFIZER INC., 235 East 42nd Street, New York, NY 10017, US

(72) BASFORD, Patricia Ann, Pfizer Global Research and Development, Ramsgate Road, Sandwich, Kent CT13 9NJ, GB; STEPHENSON, Peter Thomas, Pfizer Global Research and Development, Ramsgate Road, Sandwich, Kent CT13 9NJ, GB; TAYLOR, Stefan Colin John, Pfizer Global Research and Development, Ramsgate Road, Sandwich, Kent CT13 9NJ, GB; WOOD, Anthony, Pfizer Global Researchand Development, Ramsgate Road, Sandwich, Kent CT13 9NJ, GB

(74) POPOVIĆ, Srđa i ost., Takovska 19, 11000 Beograd, RS

(57) Jedinjenje formule (I) ili njegove farmaceutski prihvatljive soli, solvati i njihovi derivati, gde je: X i Y odabrano između CH_2 i NR^4, tako da kada je jedan od X i Y, CH_2, drugi je NR^4; R^1 i R^4 su nezavisno R^5; COR^5, CO_2R^5; $CONR^6R^7$; SO_2R^5 ili (C_{1-6}alkilen)fenil, pri čemu je fenil supstituisan sa 0 do 3 atoma ili grupe izabrane od C_{1-6}alkila, C_{1-6}alkilkarbonila, C_{1-6}alkoksi, C_{1-6} alkoksikarbonila, halogena, CF_3, OH, CN, NR^6R^7, COR^7, $C0_2R^7$ ili $CONR^6R^7$;

R^2 je fenil supstituisan sa 0 do 3 atoma ili grupe odabrane između C_{1-6}alkila, C_{1-6}alkilkarbonila, C_{1-6}alkoksi, C_{1-6}alkoksikarbonila, halogena, CF_3, OH, CN, NR^6R^7, COR^7, CO_2R^7 ili $CONR^6R^7$;
R^3 je C_{1-4}alkil supstituisan sa 0 do 3 atoma fluora;
R^5 je C_{1-6}alkil; C_{2-6}alkenil, C_2-6alkinil, C_{3-7} cikloalkil;, 5- ili 6-člani aromatični heterocikl; ili 4 do 7-člani zasićen heterocikl; gde su alkil, alkenil, alkinil i cikloalkil supstituisani sa 0 do 3 atoma ili grupe odabrane od okso, halogena, CF_3, OR^7, CN, NR^6R^7, COR^7, CO_2R^7 ili $CONR^6R^7$; pri čemu dati heterocikl sadrži jedan do tri heteroatoma odabrana od N, O ili S; i gde su dati heterocikli supsituisani sa 0 do 3 atoma ili grupe odabrane od C_{1-6}alkila, C_{1-6}alkilkarbonila, C_{1-6}alkoksi, C_{1-6}alkoksikarbonila, halogena, CF_3, OH, CN, NR^6R^7, COR^7, CO_2R^7 ili $CONR^6R^7$;
R^6 je H; C_{1-6} alkil; C_{2-6} alkenil; C_{2-6} alkinil; C_{3-7} cikloalkil; 5 ili 6-člani aromatični heterocikl; ili 4 do 7-člani zasićen heterocikl; gde su dati alkil, alkenil, alkinil i cikloalkil supstituisani sa 0 do 3 atoma ili grupe odabrane od okso, halogen, CF_3, OR^7, CN, COR^7 ili CO_2R^7; pri čemu dati heterocikli sadrže jedan do tri heteroatoma odabrana od N, O ili S; i gde su dati heterocikli supstituisani sa 0 do 3 atoma ili grupe odabrane od C_{1-6} alkil, C_{1-6} alkilkarbonil, C_{1-6} alkoksi, C_{1-6} alkoksikarbonil, halogen, CF_3, OH, CN, COR^7 ili CO_2R^7;
R^7 je H ili C_{1-6} alkil; ili, kada su R^6 i R^7 vezani za isti N atom, onda NR^6R^7 takođe može da predstavlja 5 do 7 člani, zasićen, delimično nezasićen ili aromatičan, heterocikl sa 0 do 2 dodatna heteroatoma odabrana od O, N ili S.
Prijava sadrži još 31 patentni zahtev.

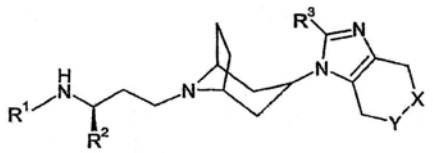

(I)

---

(51) ***C 07 D 487/04*** (2006.01) **(11) 51545**
A 61 P 29/00 (2006.01) **(13) B**
A 61 P 25/24 (2006.01)
A 61 K 31/505 (2006.01)
A 61 P 25/22 (2006.01)
A 61 P 25/30 (2006.01)
(21) P-2010/0517 (22) 17.09.2007.
(30) US 20.09.2006. 826264
(86) WO 17.09.2007. PCT/US2007/078605
(87) WO 27.03.2008. WO 2008/036579
(96) 17.09.2007. 07842582.4
(97) 15.09.2010. EP2094709B 2010/37 EN
(54) TIAZOL PIRAZOLOPIRAMIDINI KAO ANTAGONISTI CRF1 RECEPTORA
THIAZOLE PYRAZOLOPYRIMIDINES AS CRF1 RECEPTOR ANTAGONISTS

(73) ELI LILLY AND COMPANY, Lilly Corporate Center, Indianapolis, IN 46285, US
(72) CHEN, Zhaogen, 10532 Titan Run, Carmel, Indiana 46032, US; HAMDOUCHI, Chafiq, Hamdouchi, 14469 Twin Oaks Drive, Carmel, Indiana 46032, US; HEMBRE, Erik, James, 1332 North New Jersey Street, Indianapolis, Indiana 46202, US; HIPSKIND, Philip, Arthur, 4255 Cabin Court, New Palestine, Indiana 46163, US; MYERS, Jason, Kenneth, 8021 Springwater Circle, Indianapolis, Indiana 46256, US; TAKAKUWA, Takako, 7653 Germander Lane, Indianapolis, Indiana 46237, US; TOTH, James, Lee, 4642 South 625 West, Kinghtstown, Indiana 46148, US
(74) POPOVIĆ, Srđa i ost., Takovska 19, 11000 Beograd, RS
(57) Jedinjenje formule I gde:
R^1 i R^2 su nezavisno etil ili n-propil;
R^3 je vodonik, Cl, Br, metil, trifluorometil ili metoksi;
R^4 je vodonik, Br, R^aR^bN-, metoksimetil, n-butil, acetamido, piridin-4-il, morfolin-4-il, R^a i R^b su nezavisno vodonik, C_1-C_3alkil, $H_2NCH_2CH_2$-, $(CH_3)_3COC(O)MHCH_2CH_2$-, ili $CH_3CH_2CH_2NHCH_2CH_2$-; ili njegova farmaceutski prihvatljiva so.
Prijava sadrži još 12 zavisnih patentnih zahteva.

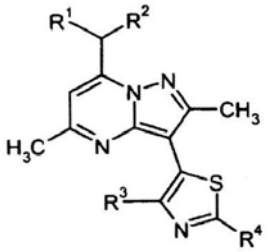

I

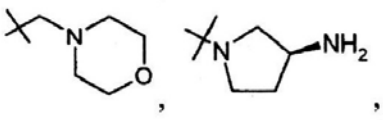

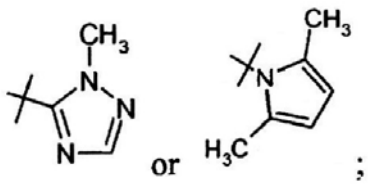

(51) ***C 07 D 487/04*** (2006.01) **(11) 51556**
A 61 P 9/08 (2006.01) **(13) B**
A 61 K 31/505 (2006.01)
(21) P-2010/0534 (22) 12.11.2004.
(30) GB 24.11.2003. 0327319
(86) WO 12.11.2004. PCT/IB2004/003747
(87) WO 02.06.2005. WO 2005/049616
(96) 12.11.2004. 04798876.1
(97) 20.10.2010. EP1689751B 2010/42 EN

(54) 5, 7-DIAMINOPIRAZOLO(4, 3-D)PIRIMIDIN SA INHIBITORNIM DEJSTVOM NA PDE-5

5, 7-DIAMINOPYRAZOLO(4, 3-D)PYRIMIDINES WITH PDE-5 INHIBITING ACTIVITY

(73) PFIZER, INC., 235 East 42nd Street, New York, NY 10017, US
(72) BELL, Andrew, Simon, Pfizer Global R&D, Ramsgate Road, Sandwich, Kent CT13 9NJ, GB; BROWN, David, Graham, Pfizer Global R&D, Ramsgate Road, Sandwich, Kent CT13 9NJ, GB; DACK, Kevin, Neil, Pfizer Global R&D, Ramsgate Road, Sandwich, Kent CT13 9NJ, GB; FOX, David, Nathan, A., Pfizer Global R&D, Ramsgate Road, Sandwich, Kent CT13 9NJ, GB; MARSH, Ian, Roger, Pfizer Global R&D, Ramsgate Road, Sandwich, Kent CT13 9NJ, GB; MORRELL, Andrew, Ian, Pfizer Global R&D, Ramsgate Road, Sandwich, Kent CT13 9NJ, GB; PALMER, Michael, John, Pfizer Global R&D, Ramsgate Road, Sandwich, Kent CT13 9NJ, GB; WINSLOW, Carel, Ann, Pfizer Global R&D, Ramsgate Road, Sandwich, Kent CT13 9NJ, GB
(74) POPOVIĆ, Srđa i ost., Takovska 19, 11000 Beograd, RS

(57) Jedinjenje formule (I) u kome su

R^1 predstavlja neka ciklična grupa koja se bira između R^A, R^B, R^c i R^D, od kojih je svaka opciono supstituisana sa jednom ili više R^7 grupa;

R^2 predstavlja vodonik ili C_1-C_2 alkil;

R^3 i R^4 svaki nezavisno, predstavlja *C_1-C_8* alkil, C_2-C_8 alkenil, C_2-C_8 alkinil ili C_3-C_{10} cikloalkil, od kojih je svaki opciono supstituisan sa jednom ili više R^8 grupa, ili R^E, opciono supstituisan sa jednom ili više R^9 grupa, ili vodonik; ili $-NR^3R^4$ formiraju R^F, koji je opciono supstituisan sa jednom ili više R^{10} grupa;

R^5 se bira između $-Y-CO_2R^{15}$ i $-Y-R^{16}$;

R^6 koji može biti spojen sa N^1 ili N^2, predstavlja C_1-C_6 alkil, C_1-C_6 haloalkil, C_2-C_6 alkenil ili C_2-C_6 alkinil, od kojih je svaki opciono supstituisan sa *C_1-C_6* alkoksi, C_1-C_6 haloalkoksi ili neka ciklična grupa koja se bira između R^J, R^K, R^L i R^M, ili R^6 predstavlja R^N, C_3-C_7 cikloalkil ili **C_3**-C_7 halocikloalkil, od kojih je svaki opciono supstituisan sa C_1-C_6 alkoksi ili C_1-C_6 haloalkoksi, ili R^6 predstavlja vodonik;

R7 predstavlja halo, *C_1-C_6* alkil, C_1-C_6 haloalkil, C_2-C_6 alkenil, C_2-C_6 alkinil, C_3-C_{10} cikloalkil, C_3-C_{10} halocikloalkil, fenil, OR^{12}, $OC(O)R^{12}$, NO_2, $NR^{12}R^{13}$, $NR^{12}C(O)R^{13}$, $NR^{12}CO_2R^{14}$, $C(O)R^{12}$, CO_2R^{12}, $CONR^{12}R^{13}$ ili CN;

R8 predstavlja halo, fenil, C_1-C_6 alkoksifenil, OR^{12}, $OC(O)R^{12}$, NO_2, $NR^{12}R^{13}$, $NR^{12}C(O)R^{13}$, $NR^{12}CO_2R^{14}$, $C(O)R^{12}$, CO_2R^{12}, $CONR^{12}R^{13}$, CN, C_3-C_6 cikloalkil, R^G ili R^H, od kojih su dva poslednja opciono supstituisana sa jednom ili više R^9 grupa;

R^9 predstavlja C_1-C_6 alkil, C_1-C_6 haloalkil ili CO_2R^{12};

R^{10} predstavlja halo, C_3-C_{10} cikloalkil, C_3-C_{10} halocikloalkil, fenil, OR^{12}, $OC(O)R^{12}$, NO_2, $NR^{12}R^{13}$, $NR^{12}C(O)R^{13}$, $NR^{12}CO_2R^{14}$, $C(O)R^{12}$, CO_2R^{13}, $CONR^{12}R^{13}$, CN, okso, C_1-C_6 alkil ili C_1-C_6 haloalkil, gde su ova dva poslednja opciono supstituisana sa R^{11};

R^{11} predstavlja fenil, $NR^{12}R^{13}$ ili $NR^{12}CO_2R^{14}$;

R^{12} i R^{13} svaki nezavisno, predstavlja vodonik, C_1-C_6 alkil ili C_1-C_6 haloalkil;

R^{14} predstavlja C_1.C_6 alkil ili *C_1-C_6* haloalkil;

R^{15} predstavlja vodonik ili C_1-C_6 alkil opciono supstituisan sa jednom ili više grupa koje se biraju između halo, OH, C_1-C_6alkiloksi, NH_2, $NH(C_1$-C_6 alkil) i $N(C_1$.C_6 alkil$)_2$;

R^{16} predstavlja neki izoster karboksilne kiseline koji se bira između tetrazol-5-il, 5-trifluorometil-1,2,4-triazol-3-il, 5-(metilsulfonil)-1,2,4-triazol-3-il, 2,5-dihidro-5-okso-1,2,4-oksadiazol-3-il, $-SO_2NHR^{17}$ i $-CONHR^{18}$;

R^{17} se bira između C_1-C_6 alkil, fenil, -CO-(C_1-C_6 alkil) i - CO-fenil;

R^{18} se bira između $-SO_2$-(C_1-C_6 alkil) i $-SO_2$-fenil;

R^A i R^J svaki nezavisno, predstavlja neka C_3-C_{10} cikloalkil ili C_3-C_{10} cikloalkenil grupa, od kojih svaka može biti monociklična, ili kada ima odgovarajući broj atoma u prstenu, policiklična, i koja može biti fuzionisana ili sa (a) nekim monocikličnim aromatičnim prstenom, koji se bira između prstena benzena i nekog 5- ili 6-članog heteroaromatičnog prstena koji sadrži do tri heteroatoma, koji se biraju između azota, kiseonika i sumpora, ili (b) nekim 5-, 6- ili 7-članim heteroalicikličnim prstenom koji sadrži do tri heteroatoma, koji se biraju između azota, kiseonika i sumpora;

R^B i R^K svaki nezavisno, predstavlja neka fenil ili naftil grupa, od kojih svaka može biti fuzionisana sa (a) nekim C_5-C_7 cikloalkil ili C_5-C_7 cikloalkenil prstenom, (b) nekim 5-, 6- ili 7-članim heteroalicikličnim prstenom koji sadrži do tri heteroatoma, koji se biraju između azota, kiseonika i sumpora, ili (c) nekim 5- ili 6-članim heteroaromatičnim prstenom koji sadrži do tri heteroatoma, koji se biraju između azota, kiseonika i sumpora;

R^C, R^L i R^N svaki nezavisno, predstavlja neki monociklični, ili kada ima odgovarajući broj atoma u prstenu, policiklični zasićen ili delimično zasićen prstenasti sistem, koji sadrži između 3 i 10 atoma u prstenu, od kojih je najmanje jedan heteroatom, koji se bira između azota, kiseonika i sumpora, prsten koji može biti fuzionisan sa nekom C_5-C_7 cikloalkil ili C_5-C_7 cikloalkenil grupom, ili neki monociklični aromatični prsten koji se bira između prestena benzena i nekog 5- ili 6-članog heteroaromatičnog prstena, koji sadrži do tri heteroatoma, koji se biraju između azota, kiseonika i sumpora;

R^D i R^M svaki nezavisno, predstavlja neki 5- ili 6-član heteroaromatični prsten, koji sadrži do tri nezavisna heteroatoma, koji se biraju između azota, kiseonika i sumpora, prsten, koji može još biti fuzionisan sa (a)

nekim drugim 5- ili 6-članim heteroaromatičnim prstenom koji sadrži do tri heteroatoma, koji se biraju između azota, kiseonika i sumpora;
(b) C_5-C_7 cikloalkil ili C_5-C_7cikloalkenil prstenom;
(c) nekim 5-, 6- ili 7-članim heteroalicikličnim prstenom, koji sadrži do tri heteroatoma, koji se biraju između azota, kiseonika i sumpora; ili (d) nekim prstenom benzena;
R^E, R^F i R^G svaki nezavisno, predstavlja neki monociklični, ili kada ima odgovarajući broj atoma u prstenu, policiklični zasićen prstenasti sistem koji sadrži između 3 i 10 atoma u prstenu, od kojih je najmanje jedan heteroatom, koji se bira između azota, kiseonika i sumpora; R^H predstavlja neki 5- ili 6-člani heteroaromatični prsten, koji sadrži do tri heteroatoma koji se nezavisno biraju između azota, kiseonika i sumpora; I Y predstavlja neka kovalentna veza, -CH_2-O-CH_2-, C_1-C_6 alkilenil ili C_3-C_7 cikloalkilenil; neki njegov tautomer ili neka farmaceutski prihvatljiva so ili solvat pomenutog jedinjenja ili tautomera.
Prijava sadrži još 73 zavisna patentna zahteva.

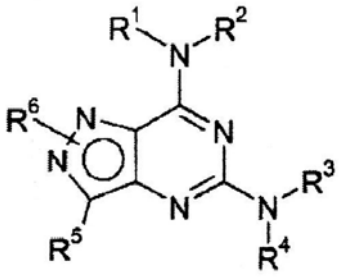

(I)

---

(51) ***C 07 K 1/18*** (2006.01) **(11) 51512**
C 07 K 14/555 (2006.01) **(13) B**
C 07 K 14/76 (2006.01)
C 07 K 14/56 (2006.01)
(21) P-2002/0505 (22) 26.06.2002.
(43) 19.09.2005.
(30) IT 06.07.2001. BO2001A000426
(54) POSTUPAK ZA PREČIŠĆAVANJE INTER-FERONSKIH PROTEINA POMOĆU KATJONSKE IZMENJIVAČKE HROMATOGRAFIJE
PROCESS FOR THE PURIFICATION OF INTERFERON PROTEINS THROUGH CATIONIC EXCHANGE CHROMATOGRAPHY
(73) ALFA WASSERMANN S.P.A., Contrada Sant'Emidio s.n.c., 65020 Alanno Scalo (Pescara), IT
(72) SCAPOL, Lucia, Via XXV Aprile, 40037 Sasso Marconi (Bologna), IT; VISCOMI, Giuseppe Claudio, Via XXV Aprile, 40037 Sasso Marconi (Bologna), IT
(74) MIKIJELJ, Rade i ost., Vlajkovićeva 28, 11000 Beograd, RS
(57) Postupak prečišćavanja interferon proteina, **naznačen time**, što se sastoji od izvođenja katjonske izmenjivačke hromatografije na čvrstom nosaču na baznijem pH od pH koji odgovara izoelektričnoj tačci, pI, proteina koji se prečišćavaju, pH na kome su pomenuti proteini i dalje absorbovani i eluiranja pomenutih proteina povećavanjem jonske jačine i/ili pH vodenog rastvora pufera.
Prijava sadrži još 7 patentnih zahteva.

---

(51) ***C 07 K 19/00*** (2006.01) **(11) 51544**
C 07 K 14/705 (2006.01) **(13) B**
(21) P-2010/0506 (22) 30.06.2006.
(96) 30.06.2006. 06013668.6
(97) 08.09.2010. EP1873166B 2010/36 EN
(54) POBOLJŠANI SGP 130FC DIMERI
IMPROVED SGP 130FC DIMERS
(73) CONARIS RESEARCH INSTITUTE AG, Schauenburgerstrasse 116, 24118 Kiel, DE
(72) WÄTZIG, Georg, Heider Strasse 19, 24106 Kiel, DE; SEEGERT, Dirk, Freesenberg 148, 24161 Altenholz, DE
(74) ŽIVKO MIJATOVIĆ & PARTNERS, Takovska 58, 11000 Beograd, RS
(57) Polipeptidni dimer koji je sposoban da inhibira aktivnost agonističkog kompleksa IL-6/sIL-6R i sadrži dva monomera, gde svaki od pomenutih monomera sadrži (a) vanćelijski deo gpl30 molekula ili (b) varijantu ili fragment pomenutog vanćelijskog dela sposoban da inhibira aktivnost agonističkog kompleksa IL-6/sIL-6R, fuzionisanog sa Fc domenom IgG1 proteina i gde je najmanje jedan aminokiselinski ostatak Leu235 zglobnog regiona Fc domena zamenjen najmanje jednim hidrofilnim aminokiselinskim ostatkom.
Prijava sadrži još 16 zavisnih patentnih zahteva.

---

(51) ***C 12 N 9/12*** (2006.01) **(11) 51525**
(13) B
(21) P-2010/0470 (22) 05.01.2007.
(30) EP 05.01.2006. 06360001
EP 13.10.2006. 06360047
(86) WO 05.01.2007. PCT/EP2007/050120
(87) WO 12.07.2007. WO 2007/077256
(96) 05.01.2007. 07703676.2
(97) 11.08.2010. EP1979474B 2010/32 EN
(54) PTIČIJA TELOMERAZNA REVERZNA TRANSKRIPTAZA
AVIAN TELOMERASE REVERSE TRANSCRIPTASE
(73) TRANSGENE SA, Parc d`Innovation Boulevard Gonthier d`Andernach, F-67400 Illkirch Graffenstaden, FR
(72) ERBS, Philippe, Les Malteries 3, rue Kirschleger, F-67000 Strasbourg, FR; BALLOUL, Jean-Marc, 4A, rue Dornach, F-67000 Strasbourg, FR; KAPFER, Marina, 29, rue des Malteries, F-67300 Schiltigheim, FR; SILVESTRE, Nathalie, 6, rue des Iris, F-67120 Ergersheim, FR

(74) PAVLOVIĆ, Gordana i ost., Majke Jevrosime 53, 11000 Beograd, RS
(57) Izolovan ili rekombinantan polipeptid koji sadrži aminokiselinsku sekvencu koja ima najmanje 80% aminokiselinske sekvencne identičnosti sa aminokiselinskom sekvencom telomerazne reverzne transkriptaze Cairina moschata SEQ ID Nº:1 i koja ima aktivnost TERT.
Prijava sadrži još 26 zavisnih patentna zahteva.

---

(51) ***C 12 N 15/86*** (2006.01) **(11) 51559**
A 61 K 48/00 (2006.01) **(13) B**
C 12 N 15/861 (2006.01)
(21) P-2011/0023 (22) 18.05.2005.
(30) ES 20.05.2004. 200401219
(86) WO 18.05.2005. PCT/ES 2005/000277
(87) WO 01.12.2005. WO 2005/112541
(96) 18.05.2005. 05750184.3
(97) 17.11.2010. EP1760153B 2010/46 EN
(54) HIBRIDNI VEKTOR ADENOVIRUSA/ALFAVIRUSA ZA EFIKASNU PRIMENU I EKSPRESIJU TERAPEUTSKIH GENA U ĆELIJAMA TUMORA
ADENOVIRUS/ALPHAVIRUS HYBRID VECTOR FOR THE EFFECTIVE ADMINISTRATION AND EXPRESSION OF THERAPEUTIC GENES IN TUMOUR CELLS
(73) PROYECTO DE BIOMEDICINA CIMA, S.L., Avenida. Pío XII, 22 Oficina 1, 31008 Pamplona - Navarra, ES
(72) QIAN, Cheng, Fundación para la Investigación Médica Aplicada, Fima, Avda. Pío XII, 55, E-31008 Pamplona (Navarra), ES; GUAN, Min, Fundación para la Investigación Médica Aplicada, Fima, Avda. Pío XII, 55, E-31008 Pamplona (Navarra), ES; SMERDOU PICAZO, Cristian, Fundación para la Investigación Médica Aplicada, Fima, Avda. Pío XII, 55, E-31008 Pamplona (Navarra), ES; PRIETO VALTUEÑA, Jesus, Fundación para la Investigación Médica Aplicada, Fima, Avda. Pío XII, 55, E-31008 Pamplona (Navarra), ES
(74) ŽIVKO MIJATOVIĆ & PARTNERS, Takovska 58, 11000 Beograd, RS
(57) Adenovirusni hibridni vektor sa genskom ekspresijom **naznačen time** što sadrži najmanje sledeće elemente, orijentisane u smeru 5' do 3':
i. lanac adenovirusnog porekla koji sadrži prvu invertovanu terminalnu ponavljajuću (ITR) sekvencu i signalnu sekvencu za pakovanje adenovirusa;
ii. prvu ne-kodirajuću „stuffer" sekvencu;
iii. sekvencu koja odgovara tkivno specifičnom promotoru;
iv. lanac cDNK poreklom od alfavirusa, čija sekvenca je delimično komplementarna alfavirusnoj RNK, koji sadrži najmanje sekvencu koja kodira najmanje jedan egzogeni gen od interesa, pri čemu navedeni cDNK lanac sadrži: a. 5' sekvencu neophodnu za replikaciju alfavirusa, b. sekvencu koja kodira ne-strukturae proteine neophodne za replikaciju alfavirusne RNK, c. najmanje jedan subgenomski promotor alfavirusa, I d. 3' sekvencu neophodnu za replikaciju alfavirusa; v. poliadenilacionu sekvencu; I vi. drugu adenovirusnu invertovanu terminalnu ponavljajuću (ITR) sekvencu.
Prijava sadrži još 36 zavisnih patentnih zahteva.

(51) ***D 06 M 15/41*** (2006.01) **(11) 51538**
(13) B
(21) P-2011/0004 (22) 28.06.2006.
(30) EP 15.07.2005. 05106523
(86) WO 28.06.2006. PCT/US2006/025142
(87) WO 25.01.2007. WO 2007/011506
(96) 28.06.2006. 06785727.6
(97) 17.11.2010. EP1924735B 2010/46 EN
(54) KOMPOZICIJA REPELENTA ZA MRLJE I PRLJAVŠTINU
STAIN AND SOIL REPELLENT COMPOSITION
(73) INVISTA TECHNOLOGIES S.À.R.L., Talstrasse 80, 8001 Zürich, CH
(72) BAUMANN, Markus, Schankental-Strasse 5, D-67466 Erfenstein, DE
(74) ŽIVKO MIJATOVIĆ AND PARTNERS, Таковска 58, 11000 Београд, RS
(57) Kompozicija repelenta za mrlje i prljavštinu koja sadrži:
(a) 0, 1 do 3 tež. % hidroksiaromatičnih jedinjenja sa formaldehidom, koja ne sadrže sulfokiselinu i karboksilne grupe;
(b) 0, 1 do 3 tež. % hidroksiaromatičnih jedinjenja sa formaldehidom, koja su bar delimično sulfonovana;
(c) 0, 5 do 3, 5 tež. % bar jednog fluorougljenika;
(d) 0 do 5 tež. % bar jednog agensa za penjenje;
(e) 71 do 99, 3 tež. % vode;
(f) 0 do 2 tež. % bar jednog plastifikatora;
(g) 0 do 0, 5 tež. % bar jednog surfaktanta koji sadrži fluor; i
(h) 0 do 2 tež. % bar jednog polimera ili oligomera koji sadrži blokiranu izocijanatnu grupu.
Prijava sadrži još 14 patentnih zahteva.

---

(51) ***E 02 D 29/12*** (2006.01) **(11) 51539**
E 02 D 29/14 (2006.01) **(13) B**
(21) P-2010/0538 (22) 11.07.2008.
(30) FR 18.07.2007. 0756587
(86) WO 11.07.2008. PCT/FR2008/051323
(87) WO 12.02.2009. WO 2009/019379
(96) 11.07.2008. 08827054.1
(97) 15.09.2010. EP2167736B 2010/37 FR
(54) UREĐAJ DRUMSKOG ULAZNOG OTVORA SA NOSEĆIM RAMOM I POKRIVNIM ELEMENTOM, POPUT ZATVARAČA ŠAHTA ILI POKLOPCA, ZGLOBNOM VEZOM POVEZANIM SA RAMOM
HIGHWAYS DEVICE WITH SUPPORT FRAME AND CROWN ELEMENT SUCH AS A MANHOLE COVER OR LID MOUNTED TO HINGE ON THE FRAME
(73) NORINCO, Z.I. de Marivaux, 60149 Saint Crepin Ibouvillers, FR
(72) FUMALLE, Christian, 16 rue Corot, F-95430 Butry Sur Oise, FR
(74) ŽIVKO MIJATOVIĆ & PARTNERS, Takovska 58, 11000 Beograd, RS
(57) Uređaj drumskog ulaznog otvora sastoji se od nosećeg rama (2) i najmanje jednog pokrivnog elementa (3), poput zatvarača ili poklopca, koji je najmanje jednom zglobnom vezom -sarkom (5) povezan sa ramom

(2) duž jedne ivice (4) pokrivnog elementa (3), koji može zauzimati zatvoreni položaj u kojem pokrivni element (3) uleže u obodni rub (6) rama (2) i barem delimično se naslanja na gornju površinu (7a) ivičnog žleba (7) rama (2), i otvoreni položaj pri kojem je pokrivni element (3) podignut, **naznačen time** da se zglobna veza (5) sastoji od jedne cilindrične osovine (14) koja je paralelna sa odgovarajućim rubom (6) rama (2) i koja prolazi kroz otvore (17, 18) na otvorima šarke (15, 16), koji se sastoje od dva otvora šarke (15) postavljena na gornjoj površini (7a) ivičnog žleba (7) na ramu (2) i čiji su otvori izvedeni u vidu izduženih rupa (17) upravnih u odnosu na ivični žleb (7), i dva otvora žleba (16) postavljena sa unutrašnje strane pokrivnog elementa (3), i to tako da cilindrična osovina (14) može slobodno da se pomera u duguljastim rupama (17) otvora šarke (15) na ivičnom žlebu (7) tokom zakretanja pokrivnog elementa (3) između zatvorenog i otvorenog položaja na ramu (2).
Prijava sadrži još 11 zavisnih patentnih zahteva.

---

(51) ***F 01 K 21/04*** (2006.01) **(11) 51511**
F 01 K 7/16 (2006.01) **(13) B**
(21) P-2006/0127 (22) 26.07.2004.
(43) 31.12.2007.
(30) DE 27.08.2003. 203 13 279.3
(86) WO 26.07.2004. PCT/EP2004/008348
(87) WO 10.03.2005. WO 2005/021935
(54) TERMOELEKTRANA
STEAM POWER PLANT
(73) SIEMENS AKTIENGESELLSCHAFT,
Wittelsbacherplatz 2, 80333 München, DE
(72) HABERBERGER, Georg, Bussardstrasse 46, DE-91088 Bubenreuth, DE; KAIL, Christoph, Schäferstrasse 4, DE-59872 Meschede, DE
(74) POPOVIĆ, Srđa i ost., Takovska 19,
11000 Beograd, RS
(57) Termoelektrana (1), koja se sastoji iz najmanje jedne parne turbine (3) i jednog zagrevanog generatora pare (5), **naznačena time**, što je postavljen jedan uređaj za sagorevanje (7) u pravcu (9) protoka vodene pare (17) posle prvog stepena (11) turbine, a pre drugog stepena (13) parne turbine (3).
Prijava sadrži još 1 nezavisan i 3 zavisna patentna zahteva.

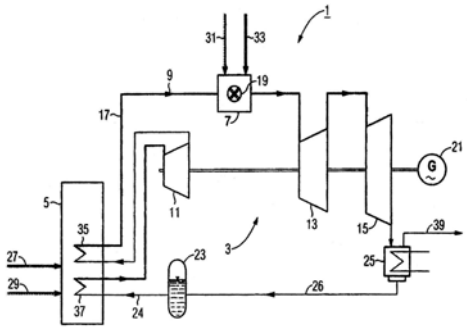

(51) ***F 15 D 1/00*** (2006.01) **(11) 51524**
(13) B
(21) P-2007/0403 (22) 09.10.2007.
(43) 25.03.2009.
(54) POBOLJŠANA MLAZNICA ZA ISTAKANJE GORIVA
IMPROVED FUEL DISPENSING NOZZLE
(73) RAJIĆ, Vladimir, Cara Lazara 101,
21234 Bački Jarak, RS
(72) GOGIĆ, Rade, Ruža 71, 21235 Temerin, RS; RAJIĆ, Vladimir, Cara Lazara 101, 21234 Bački Jarak, RS
(74) ŽIVKOVIĆ, Zoran, Alekse Nenadovića 16,
11000 Beograd, RS
(57) Poboljšana mlaznica za istakanje goriva sa automatskim isključivanjem dovoda tečnog goriva i usisavanjem para tog goriva i njihovim vraćanjem u rezervoar iz koga se gorivo istače, koja obuhvata telo 1 mlaznice za koje je pričvršćena izlivna cev 11, a u kome je membranski sklop 7 za aktiviranje i deaktiviranje pokretanjem ručke 20, gde je oko cevi 11 postavljen usisnik 12 koji je preko umetka 16 u oblozi 21 ručke 20 povezan sa priključkom 2, **naznačena time**, što obuhvata sklop poteznice (9) sa čeličnim klipom (18) i skraćenom čivijom (15). sklop gravitacionog ventila u izlivnoj cevi (11) za konotrlu usisavanja isparenja goriva sa kuglicom (23) i prigučnicom (25), i klizni ili magnetni ventilski sklop za aktiviranje/deaktiviranje mehanizma za uključivanje mlaznice.
Prijava sadrži još 4 zavisna patentna zahteva.

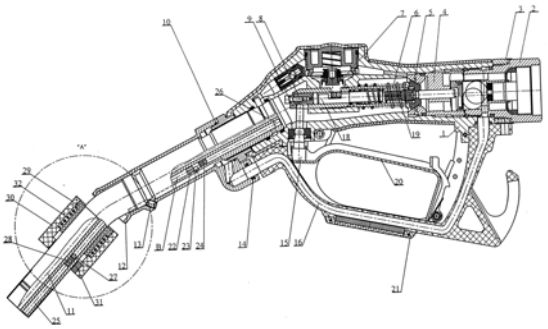

---

(51) ***F 16 K 17/00*** (2006.01) **(11) 51513**
(13) B
(21) P-2007/0385 (22) 26.09.2007.
(43) 25.03.2009.
(54) GRAVITACIONI VENTIL ZA PARU MLAZNICE ZA ISTAKANJE GORIVA
VAPOUR GRAVITY VALVE FOR FUEL DISPENSING NOZZLE
(73) RAJIĆ, Vladimir, Cara Lazara 101,
21234 Bački Jarak, RS
(72) GOGIĆ, Rade, Ruža 71, 21235 Temerin, RS; RAJIĆ, Vladimir, Cara Lazara 101, 21234 Bački Jarak, RS
(74) ŽIVKOVIĆ, Zoran, Alekse Nenadovića 16,
11000 Beograd, RS

(57) Gravitacioni ventil za paru mlaznice za istakanje goriva, koja se sastoji od tela 1 za čiji je prednji kraj pričvršćena izlivna cev 2 oko koje je usisnik 3 pare goriva povezan sa umetkom 8 u oblozi 7, kroz koji para goriva protiče do unutrašnjeg dela priključka 19 u telu 1, a spoljni deo priključka 19 povezan je sa koaksijalnim crevom za dovod goriva i odvod njegovih para, **naznačen time**, što je priključak (19) integralno izrađen sa cilindrom (23) u čijem se ekscentričnom delu nalazi kuglica (16), a koji je sjedne strane zatvoren dnom (21) u kome je izveden kanal (22) za usisavanje pare goriva, a sa druge strane poklopcem (13), gde je zaptivenost dna (21) i poklopca (13) obezbeđena prstenastim zaptivkama (20. 14), i stoje u cilindru (23). do dna (21), izveden otvor (24) za prolaz pare goriva od umetka (8), kroz kanal (22) u pravcu vakuum pumpe.
Prijava sadrži još 2 zavisna patentnih zahteva.

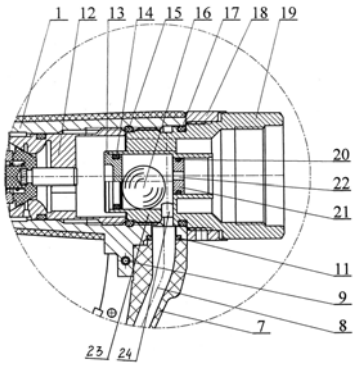

---

(51) ***F 16 L 21/04*** (2006.01) **(11) 51514**
(13) B
(21) P-2010/0471 (22) 02.03.2006.
(30) DK 04.03.2005. 200500337
(86) WO 02.03.2006. PCT/DK2006/000124
(87) WO 08.09.2006. WO 2006/092144
(96) 02.03.2006. 06706095.4
(97) 01.09.2010. EP1864049B 2010/35 EN
(54) SPOJ ZA CEVI
PIPE COUPLING
(73) AAGE V. KJÄRS MASKINFABRIK A/S, Söndergade 33, 8464 Galten, DK
(72) FREUDENDAHL, Erling, A., Havrevej 7, DK-8464 Galten, DK
(74) RISTIĆ, Dragoslav i ost., Cara Lazara 7, 11000 Beograd, RS
(57) Spoj za cevi (1), **naznačen time**, da obuhvata:
- kružni rukav (2) koji ima najmanje jedan kraj za uvođenje koji je oblikovan tako da u njega može da se uvede kraj neke cevi, ali tako da se uvodi u smeru uvođenja (I), pri čemu pomenuti rukav sadrži produženi rub (4) koji ima kraj prednje strane (6) koji je zašiljen u smeru uvođenja cevi, - kružno pomagalo za zatezanje (13) koje ima prednju stranu za zatezanje (24) koja je okrenuta prema spoljnoj prednjoj strani cevi, - kružno elastično pomagalo za zatvaranje (12) koje se nalazi među ruba (4) i pomagala za zatezanje (13) kada se posmatra u aksijalnom smeru, - kružno pomagalo za pritisak (8), i- pomagalo za učvršćivanje tipa štraf/matica za pokretanje rukava (2) i pomagala za pritisak (8) jedan prema drugome sa ciljem da se pokrene prednja strana za zatezanje na pomagalu za zatezanje (13) i samo pomagalo za zatvaranje (12) prema unutra i u smislu zatezanja i zatvaranja, pri čemu spoljna prednja strana cevi je karakterizovana sa time daje pomagalo za pritisak (8) podeljeno u brojne odvojene prstenske segmente (10) i sadrži potpornu stranu (9) koja je prilagođena da dodiruje kraj prednje površine (6) samoga ruba (4) i koja je oblikovana tako da uz pomoć aksijalnog pomicanja pomagala za pritisak u odnosu na pomenuti rub segmenata sa pomagala za pritisak se pomiču prema unutra i prema spoljnoj prednjoj strani (16) cevi, i time da šrafovi koji se protežu kroz produžene, radijalno usmerene otvore (29, 30) u rubu (4), a ta pomagala su obezbeđena sa ciljem da značajno zadrže šarafe radijalno u odnosu na pomagalo za pritisak (8) tako da istovremeno sa pomicanjem prstenskih segmenata (10) sa pomagala za pritisak (8) prema unutra sami šarafi se pomiču takođe radijalno prema unutra.
Prijava sadrži još 9 zavisnih patentnih zahteva.

---

(51) ***F 22 B 37/10*** (2006.01) **(11) 51533**
F 22 B 37/04 (2006.01) **(13) B**
F 22 B 37/22 (2006.01)
F 22 G 3/00 (2006.01)
(21) P-2010/0556 (22) 04.07.2005.
(30) DE 05.07.2004. 102004032611
(86) WO 04.07.2005. PCT/DE2005/001174
(87) WO 19.01.2006. WO 2006/005306
(96) 04.07.2005. 05769368.1
(97) 22.09.2010. EP1769195B 2010/38 DE
(54) IZRADA SPOJA IZMEĐU GREJNIH POVRŠINA GENERATORA PARE I KOLEKTORA I/ILI DISTRIBUTERA
ESTABLISHING A CONNECTION BETWEEN STEAM GENERATOR HEATING SURFACES AND A COLLECTOR AND/OR DISTRIBUTOR
(73) HITACHI POWER EUROPE GMBH, Schifferstrasse 80, 47059 Duisburg, DE
(72) BECKER, Martin, Tempelhofer Strasse 96, 51375 Leverkusen, DE; HETTKAMP, Dietmar, Am Licken Berg 32, 46596 Hünxe, DE; HUSEMANN, Ralf-Udo, Oeschberg 20b, 40885 Ratingen, DE
(74) PLAVŠA, Drago i ost., Strumička 51, 11050 Beograd, RS
(57) Postupak za izradu spoja između austenitnih grejnih površina generatora pare i suda (5) koji se upotrebljava kao kolektor (5, 17) ili distributer, pri čemu se cevni priključci (1) instaliraju između spojnih cevi (15) koje vode do grejne površine generatora pare i zida (2) kolektora ili osnovnog tela suda (5) i respektivno se zavaruju direktno za zid (2) suda na jednom kraju i za spojnu cev (15) na drugom kraju tako da formiraju aksijalni zazor (4) između zida (2) suda i cevnog priključka (1), **naznačen time**, što se cevni priključci (1), respektivno, umeću u spoljašnju sekciju (7)

stepenastog spojnog otvora (6) zida (2) suda i što se odgovarajući cevni priključak (1) napravljen od legure bazirane na niklu zavaruje za zid (2) osnovnog tela (5) suda napravljenog od martenzitnog ili feritnog materijala ili legure bazirane na niklu i za spojnu cev (15) napravljenu od austenitnog materijala.
Prijava sadrži još 43 patentna zahteva.

---

(51) ***F 24 H 1/08*** (2006.01) **(11) 51522**
F 24 H 1/20 (2006.01) **(13) B**
F 24 H 1/18 (2006.01)
F 24 H 1/00 (2006.01)
(21) P-2010/0266 (22) 16.06.2010.
(43) 31.10.2010.

(54) BOJLER SA ROTACIONIM SKLOPOM ZA SEPARATNO ZAGREVANJE VODE
WATER HEATER WITH A ROTATING ASSEMBLY FOR SEPARATE WATER HEATING
(73) KOVAČEVIĆ, Dušan, Ilije Garašanina 3, 11000 Beograd, RS
(72) KOVAČEVIĆ, Dušan, Ilije Garašanina 3, 11000 Beograd, RS
(57) Bojler sa rotacionim sklopom za separatno zagrevanje tople vode sastoji se iz rezervoara (28) bojlera sa ugradjenom cevi (33) na polovini visine bojlera, **naznačen time**, što su u cilindru (70) rastavljivom vezom povezani rotaciono-distribucioni sklop (Q) i pogonski sklop (W), i stoje cilindar (70) rastavljivom vezom, najbolje prirubnicama (71) spojen sa cevi (33) na rezervoaru (28) bojlera.
Prijava sadrži još 4 zavisna patentna zahteva.

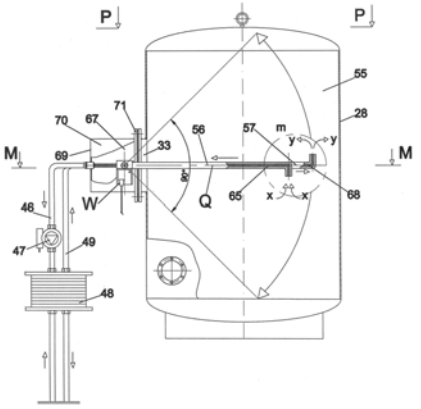

---

(51) ***G 01 N 33/68*** (2006.01) **(11) 51523**
(13) B
(21) P-2002/1012 (22) 13.06.2001.
(43) 16.01.2006.
(30) EP 07.07.2000. 00114650.5
EP 20.12.2000. 00127892.8
EP 07.02.2001. 01102732.3
(86) WO 13.06.2001. PCT/GB01/02584
(87) WO 17.01.2002. WO 02/04954

(54) RANA DIJAGNOZA KONFORMACIONIH BOLESTI
EARLY DIAGNOSIS OF CONFORMATIONAL DISEASES
(73) LABORATOIRES SERONO SA, Centre Industriel, 1267 Coinsins, Vaud, CH
(72) SOTO, Claudio, 37 chemin des Méandres, CH-1287 Laconnex, CH; SABORIO, Gabriella, 28 chemin de la Planche Brùlée, F-01210 Ferney-Voltaire, FR
(74) NAUMOVIĆ, Zoran, Krunska 77, 11000 Beograd, RS
(57) Postupak za dijagnozu ili detekciju konformacijske bolesti koja se odlikuje konformacijskim prelaskom osnovnog proteina između nepatogenog i patogenog konformera da konformacijski prelaz može da se propagira iz patogenog konformera do nepatogenog konformera testiranjem markera pomenute bolesti u uzorku, gde taj postupak obuhvata: (i) kontakt navedenog uzorka sa određenom količinom nepatogenog konformera (ii) razlaganje svih eventualnih agregata koji su se mogli stvoriti tokom koraka (i); I (iii) određivanje prisustva i/ili količine navedenog patogenog konformera u uzorku, gde je taj patogeni konformer marker prisustva pomenute bolesti, **naznačen time**, da korak (i) obuhvata korak (ia) inkubacije navedenog uzorka/nepatogenog konformera, a koraci (ia) i (ii) čine ciklus koji se ponavlja najmanje dva puta pre nego što se obavi korak (iii).
Prijava sadrži još 5 nezavisnih i 8 zavisnih patentnih zahteva.

---

(51) ***G 01 R 15/24*** (2006.01) **(11) 51552**
G 02 F 1/09 (2006.01) **(13) B**
G 01 R 29/12 (2006.01)
(21) P-2007/0041 (22) 06.02.2007.
(43) 06.05.2009.
(30) RS 06.02.2007. P-2007/0041

(54) PRENOSNI UREĐAJ SA FIBER-OPTIČKIM SENZOROM ZA MERENJE INTENZITETA ELEKTRIČNE STRUJE NA INSTALACIJAMA VISOKOG NAPONA, BEZ PREKIDANJA NAPAJANJA
PORTABLE DEVICE WITH FIBER-OPTIC SENSOR FOR MEASURING R.M.S. VALUES OF CURRENT IN HIGH-VOLTAGE INSTALLATIONS WITHOUT POWER SUPPLY INTERRUPTION
(73) RADUNOVIĆ, Jovan, Španskih boraca 4, 11070 Novi Beograd, RS; PETRIČEVIĆ, Slobodan, Bulevar dr Zorana Đinđića 111, 11070 Novi Beograd, RS; MIHAILOVIĆ, Peđa, Gospodara Vučića 241/13, 11000 Beograd, RS
(72) RADUNOVIĆ, Jovan, Španskih boraca 4, 11070 Novi Beograd, RS; PETRIČEVIĆ, Slobodan, Bulevar dr Zorana Đinđića 111, 11070 Novi Beograd, RS; MIHAILOVIĆ, Peđa, Gospodara Vučića 241/13, 11000 Beograd, RS
(57) Prenosni uređaj sa fiber-optičkim senzorom za merenje intenziteta električne struje na instalacijama visokog napona, bez prekidanja napajanja se sastoji od rasklopive senzorske glave koja radi na principu Faradejevog efekta kao magnetni koncentratom izolacione motkejnqe prikazana) kojom se senzorska glava prinosi provodniku da bi ga obuhvatila, optičkog vlakna i centralne elektronske jedinice (CEJ)., **naznačen time**, što je rasklopiva senzorska glava ostvarena od

magnetnog koncentratora, u obliku zatvorene krive koja obuhvata strujni provodnik (P) i zatvara koncentrator, gde koncentrator može sadržati jedan ili dva nepokretna dela (1) sa procepom u kojem se nalazi Faradayev senzor / optički senzor (OS) povezan sa jedne strane dovodnim optičkim vlaknom (OV) koje je provučeno kroz nepokretni deo (1) koncentratora za koji su obrtno oko ose rotacije (X) pričvršćeni pokretni delovi (2) koncentratora tako da se pomeranjem u smeru (A) koncentrator otvara, dok se pomeranjem u smeru strelice (B) koncentrator zatvara oko provodnika (P) koji naleže na granične poluge (3) pričvršćene za pokretne delove (2); dok je sa druge strane Faradayev senzor / optički senzor (OS) povezan sa prijemnim optičkim vlaknom (OVp), pri čemu su drugi krajevi optičkog vlakna povezani sa centralnom elektronskom jedinicom (CEJ) tako daje drugi kraj dovodnog optičkog vlakna (OV) povezan sa emiterom kontinualne svetlosti (LED) diodom koja je priključena na mikrokontroler (MCU) na koji su priključeni memorija (SRAM) i ekran od tečnih kristala (LCD), dok je drugi kraj prijemnog optičkog vlakna (OVp) priključen na prijemnik koga čini fototranzistor (FT) čiji je izlazni priključak vezan na ulaz pojačavačkog transimpedansnog stepena (TIS) a čiji se izlaz preko grane (DC) vezuje za ulaz Altera (FN) niskopropusnika opsega jediničnog pojačanja, čiji je izlaz priključen na ulaz prvog kanala dvokanalnog AD konvertora (ADC), pri čemu je isti izlaz pojačavačkog transimpedansnog stepena (TIS) preko kondenzatora (C) vezan za ulaz pojačavača (AC) čiji je izlaz vezan na ulaz drugog kanala dvokanalnog AD konvertora (ADC) čiji je izlaz priključen na mikrokontroler (MCU).
Prijava sadrži još 5 zavisnih patentnih zahteva.

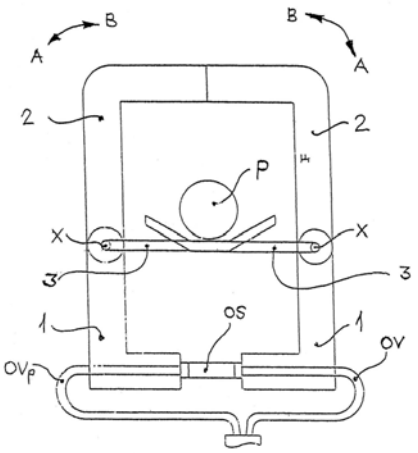

(51) ***G 07 D 7/12*** (2008.04) **(11) 51531**
(13) B
(21) P-2009/0253 (22) 29.05.2009.
(43) 07.05.2010.

(54) RUČNI PRENOSNI UREĐAJ ZA PROVERU PUTNIH I LIČNIH DOKUMENATA, OČITAVANJE BIOMETRIJSKIH PODATAKA I PREPOZNAVANJE LICA KOJA NOSE TE DOKUMENTE
HANDHELD PORTABLE DEVICE FOR TRAVEL AN ID DOCUMENT VERIFICATION, BIOMETRIC DATA READING AND IDENTIFICATION OF PERSONS USING THOSE DOCUMENTS
(73) VLATACOM D.O.O., Arčibalda Rajsa 51, 11000 Beograd, RS
(72) VUJIĆ, Saša, Dušana Vukasovića 42, 11070 Novi Beograd, RS
(57) Ručni prenosni uređaj za očitavanje biometrijskih podataka i proveru putnih i ličnih dokumenata i prepoznavanje lica koja nose te dokumente, **naznačen time**, što obuhvata kućište (1) kojem se na gornjoj strani (2) nalaze komandna ploča (3) sa funkcionalnim tasterima, zvučnik (4) i optički pokazivač (display) (5) osetljiv na dodir, i gde je na prednjoj stranici (6) kućišta (1) postavljen skener (7) otiska prsta, dok se na desnoj bočnoj stranici (8) nalazi pravougaoni prorez čitača (9) kontaktnih kartica, pored kojeg je unutar kučišta (1) postavljen čitač (91) beskontaktnih kartica, i stoje kućište (1) ručnog i prenosnog uređaja preko odgovarajućih priključaka postolja (10) međusklopovima povezano sa priključcima (12) za punjenje baterije (24), (13) USB Host priključak, (14) Ethernet priključak, (15) USB Klijent priključak i (16) RS 232 priključak, a koji su smešteni na zadnjoj stranici (11) kućišta (1) i preko kojih je ostvarena veza i komunikacija ručnog prenosnog uređaja sa glavnim računarom.
Prijava sadrži još 12 zavisnih i 1 nezavisni patentni zahtev.

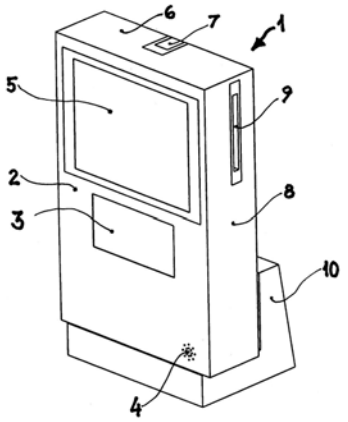

(51) ***H 01 H 71/02*** (2006.01) **(11) 51558**
H 01 H 83/04 (2006.01) **(13) B**
H 01 H 71/12 (2006.01)
(21) P-2010/0510 (22) 23.06.2005.
(30) AT 21.07.2004. 124302004
(86) WO 26.06.2005. PCT/AT2005/000224
(87) WO 26.01.2006. WO 2006/007608
(96) 23.06.2005. 05752420.9
(97) 22.09.2010. EP1771869B 2010/38 DE

(54) AUTOMATSKI OSIGURAČ
CIRCUIT BREAKER
(73) EATON GmbH, Eugenia 1, 3943 Schrems, AT
(72) MAYER, Karl-Heinz, Gerasdorfestrasse 153/260, A-1210 Wien, AT; ÖSTERREICHER, Wolfgang, , A-3970 Unserfrau 71, AT
(74) PETOŠEVIĆ, Dušan, Kozjačka 15, 11000 Beograd, RS
(57) Prekiđački uređaj (1), naročito prekidač diferencijalne struje, sadrži funkcionalne delove koji se nalaze u kućištu (3), kao što su jedinica za detekciju, prekidački relej, prekidački mehanizam (45), prekidački kontakti (43) i terminali sa unutrašnje i spoljašnje strane, sa najmanje jednim prijemnikom (7) za najmanje jednu elektronsku kontrolu i/ili modul za kontrolu odziva (8) koja se nalazi unutar prijemnika (7) i koji je povezan sa kontaktima, po mogućnosti bez kabla, koji su povezani sa najmanje jednim funkcionalnim delom i opciono sa terminalima koji se nalaze sa unutrašnje i/ili spoljašnje strane, i sa pravougaonom osnovom (10) elektronske kontrole i/ili modula za kontrolu odziva (8) koja se nalazi u prijemniku (7), zatim sadrži osnovu (10) koja ima primarne kontakte (11) kojim se povezuju, po mogućnosti bez kabla, sa elektronskom kontrolom i/ili modulom za kontrolu odziva (8) i sekundarne kontakte (12) koji se povezuju, po mogućnosti bez kabla, sa kontaktima (9) najmanje jednog funkcionalnog dela ili opciono sa terminalima koji se nalaze sa unutrašnje i/ili spoljašnje strane, **naznačen time**, što prekidački uređaj sadrži test uređaj (4) i funkcionalni deo test uređaja (4) koji sadrži putanju test struje i test dugme (13) u sklopu osnove (10).
Prijava sadrži još 11 zavisnih patentnih zahteva.

(51) ***H 05 B 6/00*** (2006.01) **(11) 51535**
(13) B
(21) P-2007/0135 (22) 05.04.2007.
(43) 28.11.2008.
(30) RS 05.04.2007. P-2007/0135
(54) ELEKTRIČNA PEĆ SA MAGNETOSTRIKCIJOM ZA ZAGREVANJE PROSTORIJA
ELECTRIC ROOM HEATER WITH MAGNETOSTRICTION
(73) ISIDOROVIĆ, Ratko, Pere Segedinca 7, 11000 Beograd, RS; ISIDOROVIĆ, Ksenija, Pere Segedinca 7, 11000 Beograd, RS; ISIDOROVIĆ, Janko, Pere Segedinca 7, 11000 Beograd, RS
(72) ISIDOROVIĆ, Ratko, Pere Segedinca 7, 11000 Beograd, RS; ISIDOROVIĆ, Janko, Pere Segedinca 7, 11000 Beograd, RS; ISIDOROVIĆ, Ksenija, Pere Segedinca 7, 11000 Beograd, RS
(57) Električna peć sa magnetostrikcijom za zagrevanje prostorija se sastoji od kućišta 8, želuzina 9, oslonaca 10, prekidača 11, signalne sijalice 12, termostata 13, priključnog kabla sa utikačem, trakastog grejača 18, **naznačen time**, što je centralni nosač (19) trakastog grejača (18) zavaren sa varom (21) za okvir (20) sa magnetnim fluksom (37) i stoje okvir (20) zavaren sa varom (22) sa nosačem (16) koji je preko elastičnog odstojnika (17) vezan zavrtnjem (14) za kućište (8) koje sa unutrašnje strane ima izolaciju (15).
Prijava sadrži još 2 zavisna patentna zahteva.

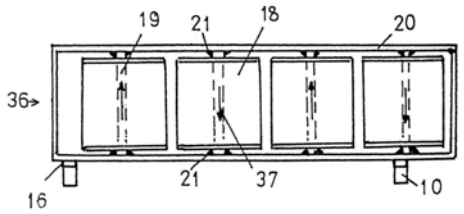

ИСПРАВКЕ

1. I Извршити исправку грешке, у решењу о признању патента бр. RS/2010/5520-П-2005/0375 (51047) од 11.06.2010. године, тако што ће се уместо погрешно наведеног носиоца права:“ EUROCELTIQUE S.A.“, уписати тачан податак који гласи:

“**EURO-CELTIQUE S.A**.“

2. I Извршити исправку грешке, у решењу о признању патента бр. RS/2010/8216-П-2005/0809 (51307) од 10.09.2010. године, тако што ће се уместо погрешно наведеног носиоца права: „Bayer Schering Pharma Aktiengesellschaft“, уписати тачан податак који гласи:

“**SCHERING AKTIENGESELLSCHAFT**“

3. I **Брише се** из Регистра патената за патент бр. 51039 и из решења о признању патента, **нетачан податак –** да је **17.05.2004**. године датум признатог права првенства по пријави бр. П-2004/0837.

II **Уписује се 23.09.2004.** године као тачан датум о признатом праву првенства по пријави бр. П-2004/0837.

ИНДЕКСНЕ ТАБЕЛЕ ЗА ПАТЕНТЕ
INDEX TABLES FOR PATENTS

- **ИНДЕКС НОСИЛАЦА ПАТЕНАТА (стр. 1592)**
- PATENT OWNER INDEX (p. 1592)

- **ИНДЕКС БРОЈЕВА ПАТЕНАТА (стр. 1595)**
- PATENT NUMBER INDEX (p. 1595)

- **ИНДЕКС БРОЈЕВА ПАТЕНАТА ПРЕМА МКП (стр. 1598)**
- INDEX OF PATENTS ACCORDING TO IPC (p. 1598)

ИНДЕКС НОСИЛАЦА ПАТЕНАТА

PATENT OWNER INDEX

(73)	(51)	(21)	(30)	(11)
AAGE V. KJÄRS MASKINFABRIK A/S	***F 16 L 21/04*** (2006.01)	P-2010/0471	DK 04.03.2005. 200500337	51514
ALFA WASSERMANN S.P.A.	***C 07 K 1/18*** (2006.01) ***C 07 K 14/555*** (2006.01) ***C 07 K 14/76*** (2006.01) ***C 07 K 14/56*** (2006.01)	P-2002/0505	IT06.07.2001.BO2001A000426	51512
ASTEX THERAPEUTICS LIMITED; CANCER RESEARCH TECHNOLOGY LIMITED and THE INSTITUTE OF CANCER RESEARCH:ROYAL CANCER HOSPITAL	***C 07 D 231/12*** (2006.01) ***C 07 D 401/10*** (2006.01) ***A 61 P 37/02*** (2006.01) ***C 07 D 413/10*** (2006.01) ***A 61 K 31/415*** (2006.01)	P-2010/0532	GB 23.12.2003. 0329617 US 23.12.2003. 532199P US 08.06.2004. 577843P	51546
ASTRAZENECA AB	***C 07 D 401/12*** (2006.01) ***C 07 D 211/16*** (2006.01) ***C 07 D 239/94*** (2006.01)	P-2010/0520	GB 30.09.2005. 0519879	51515
ASTRAZENECA AB	***C 07 D 413/12*** (2006.01) ***C 07 D 487/04*** (2006.01) ***A 61 P 25/28*** (2006.01) ***C 07 D 413/14*** (2006.01) ***A 61 K 31/519*** (2006.01) ***C 07 D 413/06*** (2006.01)	P-2010/0525	US 18.02.2004. 608960P	51516
AVENTIS PHARMA S.A.	***C 07 D 403/04*** (2006.01) ***C 07 D 453/02*** (2006.01) ***C 07 D 409/04*** (2006.01) ***C 07 D 253/06*** (2006.01) ***C 07 D 405/04*** (2006.01)	P-2010/0487	FR 22.04.2005. 0504042	51557
BAYER S.A.S.	***A 01 N 43/40*** (2006.01) ***A 01 N 47/12*** (2006.01)	P-2003/0706	FR 08.03.2001. 01/03141	51504
BAYER SCHERING PHARMA AKTIENGESELLSCHAFT	***A 61 K 31/56*** (2006.01) ***A 61 K 31/565*** (2006.01) ***A 61 K 31/568*** (2006.01) ***A 61 K 47/14*** (2006.01) ***A 61 P 15/08*** (2006.01) ***A 61 P 5/26*** (2006.01)	P-2005/0702	DK 14.03.2003 PA200300399	51537
BOEHRINGER INGELHEIM INTERNATIONAL GMBH	***A 61 K 9/20*** (2006.01) ***A 61 K 31/428*** (2006.01) ***A 61 K 9/00*** (2006.01) ***A 61 K 31/4745***(2006.01)	P-2010/0557	EP 13.08.2004. 04019248	51527
CM&D, Pharma Limited	***A 61 K 9/22*** (2006.01) ***A 61 K 31/722*** (2006.01) ***A 61 P 3/12*** (2006.01) ***A 61 P 7/00*** (2006.01) ***A 61 K 31/785*** (2006.01) ***A 61 K 33/08*** (2006.01) ***A 61 P 13/12*** (2006.01)	P-2010/0513	IT 07.12.2004. ME20040015	51507
CONARIS RESEARCH INSTITUTE AG	***C 07 K 19/00*** (2006.01) ***C 07 K 14/705*** (2006.01)	P-2010/0506		51544

(73)	(51)	(21)	(30)	(11)
D.M.G. ITALIA SRL	***A 61 K 9/00*** (2006.01) ***A 61 K 31/4164***(2006.01) ***A 61 K 31/19*** (2006.01)	P-2010/0474	IT 10.11.2005. RM20050561	51532
EATON GmbH	***H 01 H 71/02*** (2006.01) ***H 01 H 83/04*** (2006.01) ***H 01 H 71/12*** (2006.01)	P-2010/0510	AT 21.07.2004. 124302004	51558
ELI LILLY & COMPANY	***C 07 D 409/14*** (2006.01) ***A 61 K 31/4178***(2006.01) ***A 61 K 31/4439***(2006.01) ***A 61 K 31/496*** (2006.01) ***A 61 K 31/381*** (2006.01) ***A 61 K 31/4436***(2006.01) ***A 61 K 31/444*** (2006.01) ***A 61 P 35/00*** (2006.01)	P-2010/0547	US 21.12.2006. 871322P	51526
ELI LILLY AND COMPANY	***C 07 D 487/04*** (2006.01) ***A 61 P 29/00*** (2006.01) ***A 61 P 25/24*** (2006.01) ***A 61 K 31/505*** (2006.01) ***A 61 P 25/22*** (2006.01) ***A 61 P 25/30*** (2006.01)	P-2010/0517	US 20.09.2006. 826264	51545
GEOX S.P.A.	***A 43 B 7/12*** (2006.01) ***A 43 B 13/16*** (2006.01)	P-2005/0232	IT 24.09.2002 PD2002A000246	51509
GEOX S.P.A.	***A 43 B 7/12*** (2006.01)	P-2005/0282	IT15.10.2002. PD2002A000264	51510
GEOX S.P.A.	***A 43 B 7/08*** (2006.01) ***A 43 B 7/12*** (2006.01)	P-2006/0034	IT 22.07.2003 PD2003A000166	51553
H. LUNDBECK A/S	***A 61 K 31/495*** (2006.01) ***A 61 P 25/04*** (2006.01) ***A 61 P 25/26*** (2006.01) ***A 61 P 25/22*** (2006.01) ***C 07 D 295/08*** (2006.01) ***A 61 P 25/24*** (2006.01) ***A 61 P 25/28*** (2006.01)	P-2011/0027	DK 20.03.2007. 200700427 DK 15.06.2007. PCT/2007/50075	51560
HITACHI POWER EUROPE GMBH	***F 22 B 37/10*** (2006.01) ***F 22 B 37/04*** (2006.01) ***F 22 B 37/22*** (2006.01) ***F 22 G 3/00*** (2006.01)	P-2010/0556	DE 05.07.2004. 102004032611	51533
INVISTA TECHNOLOGIES S.À.R.L.	***D 06 M 15/41*** (2006.01)	P-2011/0004	EP 15.07.2005. 05106523	51538
ISIDOROVIĆ, Ratko; ISIDOROVIĆ, Janko and ISIDOROVIĆ, Ksenija	***H 05 B 6/00*** (2006.01)	P-2007/0135	RS 05.04.2007. P-2007/0135	51535
ISTITUTO DI RICERCHE DI BIOLOGIA MOLECOLARE P.ANGELETTI SPA	***A 61 K 31/515*** (2006.01) ***C 07 D 239/54*** (2006.01) ***C 07 D 401/12*** (2006.01) ***C 07 D 401/14*** (2006.01) ***C 07 D 403/10*** (2006.01) ***C 07 D 401/06*** (2006.01) ***C 07 D 403/04*** (2006.01) ***C 07 D 401/04*** (2006.01) ***C 07 D 403/12*** (2006.01) ***C 07 D 417/04*** (2006.01) ***C 07 D 513/04*** (2006.01) ***C 07 D 413/12*** (2006.01) ***C 07 D 403/04*** (2006.01) ***C 07 D 413/14*** (2006.01) ***C 07 D 413/04*** (2006.01)	P-2004/0356	US 26.10.2001. 60/339,568 US 06.03.2002. 60/362,191	51542

(73)	(51)	(21)	(30)	(11)
JANSSEN PHARMACEUTICA N.V.	***A 61 K 31/352*** (2006.01) ***A 61 K 31/357*** (2006.01) ***A 61 P 3/10*** (2006.01) ***A 61 K 31/353*** (2006.01) ***A 61 P 3/06*** (2006.01)	P-2010/0530	US 19.12.2005. 751677P US 18.12.2006. 611961	51521
KOVAČEVIĆ, Dušan	***F 24 H 1/08*** (2006.01) ***F 24 H 1/20*** (2006.01) ***F 24 H 1/18*** (2006.01) ***F 24 H 1/00*** (2006.01)	P-2010/0266		51522
LABORATOIRES SERONO SA	***A 61 K 38/24*** (2008.04) ***A 61 P 15/08*** (2008.04)	P-2004/0212	EP 12.09.2001. 01307755.7	51505
LABORATOIRES SERONO SA	***G 01 N 33/68*** (2006.01)	P-2002/1012	EP 07.07.2000. 00114650.5 EP 20.12.2000. 00127892.8 EP 07.02.2001. 01102732.3	51523
LES LABORATOIRES SERVIER	***C 07 D 285/28*** (2006.01) ***A 61 P 25/00*** (2006.01) ***A 61 K 31/549*** (2006.01)	P-2010/0540	FR 09.07.2008. 20080003898	51518
LES LABORATOIRES SERVIER	***A 61 K 31/55*** (2006.01) ***A 61 P 9/10*** (2006.01) ***A 61 K 31/4422***(2006.01)	P-2010/0554	FR 21.12.2005. 0513008	51534
LES LABORATOIRES SERVIER	***C 07 D 333/38*** (2006.01)	P-2005/0241	FR 24.09.2002. 02/11765	51551
LES LABORATOIRES SERVIER	***C 07 D 223/16*** (2006.01)	P-2011/0002	FR 29.08.2008. 0804755	51554
LONZA AG	***C 07 D 215/18*** (2006.01)	P-2010/0440	EP 25.04.2007. 07008412	51528
MERCK SHARP & DOHME CORP.	***C 07 D 213/61*** (2006.01) ***A 61 K 31/444*** (2006.01) ***A 61 P 29/00*** (2006.01)	P-2002/0894	US 26.05.2000. 60/208,017	51541
MERZ PHARMA GMBH & CO. KGAA	***A 61 K 31/13*** (2006.01) ***A 61 P 25/28*** (2006.01) ***A 61 K 45/06*** (2006.01)	P-2010/0561	US 05.01.2004. 534553P US 04.02.2004. 542176P	51540
MILLENNIUM PHARMACEUTICALS, INC.	***C 07 D 213/82*** (2006.01) ***C 07 D 251/18*** (2006.01) ***C 07 D 403/08*** (2006.01) ***C 07 D 498/04*** (2006.01) ***A 61 P 35/00*** (2006.01) ***C 07 D 239/48*** (2006.01) ***C 07 D 403/04*** (2006.01) ***C 07 D 473/32*** (2006.01) ***A 61 K 31/505*** (2006.01)	P-2011/0014	US 08.08.2006. 836158P	51549
NORINCO	***E 02 D 29/12*** (2006.01) ***E 02 D 29/14*** (2006.01)	P-2010/0538	FR 18.07.2007. 0756587	51539
NOVARTIS AG	***C 07 D 401/04*** (2006.01) ***C 07 D 405/12*** (2006.01) ***C 07 D 417/12*** (2006.01) ***A 61 P 35/00*** (2006.01) ***C 07 D 401/14*** (2006.01) ***C 07 D 405/14*** (2006.01) ***A 61 K 31/506*** (2006.01)	P-2010/0439	US 20.01.2006. 760789P	51548
ORTHO-MCNEIL PHARMACEUTICAL INC.	***C 07 D 285/08*** (2006.01) ***C 07 D 417/12*** (2006.01) ***A 61 K 31/433*** (2006.01) ***A 61 P 3/00*** (2006.01) ***A 61 P 17/00*** (2006.01) ***A 61 P 25/00*** (2006.01)	P-2004/0397	US 08.11.2001. 60/337,927	51530

(73)	(51)		(21)	(30)	(11)
PETROVIĆ, Slobodan	***A 61 K 36/28***	(2006.01)	P-2006/0394	YU 22.06.2006. P-2006/0394	51508
	A 61 K 135/00	(2006.01)			
	A 61 K 9/22	(2006.01)			
	A 61 K 36/53	(2006.01)			
	A 61 K 9/02	(2006.01)			
	A 61 K 133/00	(2006.01)			
	A 61 P 15/02	(2006.01)			
PFIZER INC.	***C 07 D 451/04***	(2006.01)	P-2004/0888	GB 08.04.2002. 0208071.1	51550
	A 61 K 31/46	(2006.01)		GB 23.01.2003. 0301575.7	
	A 61 P 29/00	(2006.01)			
PFIZER, INC.	***C 07 D 487/04***	(2006.01)	P-2010/0534	GB 24.11.2003. 0327319	51556
	A 61 P 9/08	(2006.01)			
	A 61 K 31/505	(2006.01)			
PHARMESTE S.R.L.	***C 07 C 275/24***	(2006.01)	P-2010/0441	EP 21.12.2006. 06026533	51555
	A 61 P 29/00	(2006.01)			
	A 61 K 31/17	(2006.01)			
PROYECTO DE BIOMEDICINA CIMA, S.L.	***C 12 N 15/86***	(2006.01)	P-2011/0023	ES 20.05.2004. 200401219	51559
	A 61 K 48/00	(2006.01)			
	C 12 N 15/861	(2006.01)			
PULMAGEN THERAPEUTICS (SYNERGY) LIMITED	***C 07 D 263/32***	(2006.01)	P-2010/0563	GB 08.08.2005. 0516313	51547
	A 61 K 31/421	(2006.01)			
	C 07 D 277/30	(2006.01)			
	A 61 K 31/426	(2006.01)			
RADUNOVIĆ, Jovan; PETRIČEVIĆ, Slobodan and MIHAILOVIĆ, Peđa	***G 01 R 15/24***	(2006.01)	P-2007/0041	RS 06.02.2007. P-2007/0041	51552
	G 02 F 1/09	(2006.01)			
	G 01 R 29/12	(2006.01)			
RAJIĆ, Vladimir	***F 16 K 17/00***	(2006.01)	P-2007/0385		51513
RAJIĆ, Vladimir	***F 15 D 1/00***	(2006.01)	P-2007/0403		51524
RICHTER-SYSTEM GmbH & Co. KG	***B 21 D 13/04***	(2006.01)	P-2010/0514	DE 08.05.2006. 102006021556	51520
	E 04 C 2/00	(2006.01)			
	B 21 D 13/10	(2006.01)			
SANOFI-AVENTIS DEUTSCHLAND GmbH	***C 07 D 249/18***	(2006.01)	P-2005/0207	DE 12.10.2002. 102 47 680.2	51543
	C 07 D 401/06	(2006.01)			
	C 07 D 403/06	(2006.01)			
	A 61 K 31/4192	(2006.01)			
	A 61 P 3/10	(2006.01)			
SAVIĆ, Ivica	***A 61 K 31/095***	(2006.01)	P-2005/0823	YU 02.11.2005. P-823/05	51529
	A 61 K 31/01	(2006.01)			
	A 61 K 31/13	(2006.01)			
	A 61 P 31/18	(2006.01)			
SHIRE BIOPHARMACEUTICALS HOLDINGS IRELAND LIMITED	***A 61 K 31/00***	(2006.01)	P-2010/0523	US 04.08.2004. 598432P	51519
	A 61 K 31/519	(2006.01)			
	A 61 K 31/517	(2006.01)			
	A 61 P 9/10	(2006.01)			
SIEMENS AKTIENGESELLSCHAFT	***F 01 K 21/04***	(2006.01)	P-2006/0127	DE 27.08.2003. 203 13 279.3	51511
	F 01 K 7/16	(2006.01)			
TOYAMA CHEMICAL CO., LTD.	***C 07 D 261/12***	(2006.01)	P-2010/0522	JP 26.05.2006. 2006146220	51517
	A 61 P 19/02	(2006.01)			
	A 61 K 31/42	(2006.01)			
TRANSGENE SA	***C 12 N 9/12***	(2006.01)	P-2010/0470	EP 05.01.2006. 06360001	51525
				EP 13.10.2006. 06360047	
VENUS REMEDIES LIMITED, H. O&R&D	***A 61 K 31/546***	(2006.01)	P-2010/0465	IN 02.12.2004. DE24112004	51506
	A 61 K 9/00	(2006.01)			
	A 61 K 31/46	(2006.01)			
	A 61 P 31/04	(2006.01)			
VLATACOM D.O.O.	***G 07 D 7/12***	(2008.04)	P-2009/0253		51531
WYETH	***A 61 K 39/02***	(2006.01)	P-2003/0493	US 19.12.2000. 60/256,637	51536
	A 61 K 39/116	(2006.01)			

ИНДЕКС БРОЈЕВА ПАТЕНАТА

PATENT NUMBER INDEX

(11)	(51)	
51504	***A 01 N 43/40***	(2006.01)
	A 01 N 47/12	(2006.01)
51506	***A 61 K 31/546***	(2006.01)
	A 61 K 9/00	(2006.01)
	A 61 K 31/46	(2006.01)
	A 61 P 31/04	(2006.01)
51507	***A 61 K 9/22***	(2006.01)
	A 61 K 31/722	(2006.01)
	A 61 P 3/12	(2006.01)
	A 61 P 7/00	(2006.01)
	A 61 K 31/785	(2006.01)
	A 61 K 33/08	(2006.01)
	A 61 P 13/12	(2006.01)
51508	***A 61 K 36/28***	(2006.01)
	A 61 K 135/00	(2006.01)
	A 61 K 9/22	(2006.01)
	A 61 K 36/53	(2006.01)
	A 61 K 9/02	(2006.01)
	A 61 K 133/00	(2006.01)
	A 61 P 15/02	(2006.01)
51509	***A 43 B 7/12***	(2006.01)
	A 43 B 13/16	(2006.01)
51510	***A 43 B 7/12***	(2006.01)
51511	***F 01 K 21/04***	(2006.01)
	F 01 K 7/16	(2006.01)
51512	***C 07 K 1/18***	(2006.01)
	C 07 K 14/555	(2006.01)
	C 07 K 14/76	(2006.01)
	C 07 K 14/56	(2006.01)
51513	***F 16 K 17/00***	(2006.01)
51514	***F 16 L 21/04***	(2006.01)
51515	***C 07 D 401/12***	(2006.01)
	C 07 D 211/16	(2006.01)
	C 07 D 239/94	(2006.01)
51516	***C 07 D 413/12***	(2006.01)
	C 07 D 487/04	(2006.01)
	A 61 P 25/28	(2006.01)
	C 07 D 413/14	(2006.01)
	A 61 K 31/519	(2006.01)
	C 07 D 413/06	(2006.01)
51517	***C 07 D 261/12***	(2006.01)
	A 61 P 19/02	(2006.01)
	A 61 K 31/42	(2006.01)
51518	***C 07 D 285/28***	(2006.01)
	A 61 P 25/00	(2006.01)
	A 61 K 31/549	(2006.01)

(11)	(51)	
51519	***A 61 K 31/00***	(2006.01)
	A 61 K 31/519	(2006.01)
	A 61 K 31/517	(2006.01)
	A 61 P 9/10	(2006.01)
51520	***B 21 D 13/04***	(2006.01)
	E 04 C 2/00	(2006.01)
	B 21 D 13/10	(2006.01)
51521	***A 61 K 31/352***	(2006.01)
	A 61 K 31/357	(2006.01)
	A 61 P 3/10	(2006.01)
	A 61 K 31/353	(2006.01)
	A 61 P 3/06	(2006.01)
51522	***F 24 H 1/08***	(2006.01)
	F 24 H 1/20	(2006.01)
	F 24 H 1/18	(2006.01)
	F 24 H 1/00	(2006.01)
51523	***G 01 N 33/68***	(2006.01)
51524	***F 15 D 1/00***	(2006.01)
51525	***C 12 N 9/12***	(2006.01)
51526	***C 07 D 409/14***	(2006.01)
	A 61 K 31/4178	(2006.01)
	A 61 K 31/4439	(2006.01)
	A 61 K 31/496	(2006.01)
	A 61 K 31/381	(2006.01)
	A 61 K 31/4436	(2006.01)
	A 61 K 31/444	(2006.01)
	A 61 P 35/00	(2006.01)
51527	***A 61 K 9/20***	(2006.01)
	A 61 K 31/428	(2006.01)
	A 61 K 9/00	(2006.01)
	A 61 K 31/4745	(2006.01)
51528	***C 07 D 215/18***	(2006.01)
51529	***A 61 K 31/095***	(2006.01)
	A 61 K 31/01	(2006.01)
	A 61 K 31/13	(2006.01)
	A 61 P 31/18	(2006.01)
51530	***C 07 D 285/08***	(2006.01)
	C 07 D 417/12	(2006.01)
	A 61 K 31/433	(2006.01)
	A 61 P 3/00	(2006.01)
	A 61 P 17/00	(2006.01)
	A 61 P 25/00	(2006.01)
51531	***G 07 D 7/12***	(2008.04)
51532	***A 61 K 9/00***	(2006.01)
	A 61 K 31/4164	(2006.01)
	A 61 K 31/19	(2006.01)

(11)	(51)	
51533	***F 22 B 37/10***	(2006.01)
	F 22 B 37/04	(2006.01)
	F 22 B 37/22	(2006.01)
	F 22 G 3/00	(2006.01)
51534	***A 61 K 31/55***	(2006.01)
	A 61 P 9/10	(2006.01)
	A 61 K 31/4422	(2006.01)
51535	***H 05 B 6/00***	(2006.01)
51536	***A 61 K 39/02***	(2006.01)
	A 61 K 39/116	(2006.01)
51537	***A 61 K 31/56***	(2006.01)
	A 61 K 31/565	(2006.01)
	A 61 K 31/568	(2006.01)
	A 61 K 47/14	(2006.01)
	A 61 P 15/08	(2006.01)
	A 61 P 5/26	(2006.01)
51538	***D 06 M 15/41***	(2006.01)
51539	***E 02 D 29/12***	(2006.01)
	E 02 D 29/14	(2006.01)
51540	***A 61 K 31/13***	(2006.01)
	A 61 P 25/28	(2006.01)
	A 61 K 45/06	(2006.01)
51541	***C 07 D 213/61***	(2006.01)
	A 61 K 31/444	(2006.01)
	A 61 P 29/00	(2006.01)
51542	***A 61 K 31/515***	(2006.01)
	C 07 D 239/54	(2006.01)
	C 07 D 401/12	(2006.01)
	C 07 D 401/14	(2006.01)
	C 07 D 403/10	(2006.01)
	C 07 D 401/06	(2006.01)
	C 07 D 403/04	(2006.01)
	C 07 D 401/04	(2006.01)
	C 07 D 403/12	(2006.01)
	C 07 D 417/04	(2006.01)
	C 07 D 513/04	(2006.01)
	C 07 D 413/12	(2006.01)
	C 07 D 403/04	(2006.01)
	C 07 D 413/14	(2006.01)
	C 07 D 413/04	(2006.01)
51543	***C 07 D 249/18***	(2006.01)
	C 07 D 401/06	(2006.01)
	C 07 D 403/06	(2006.01)
	A 61 K 31/4192	(2006.01)
	A 61 P 3/10	(2006.01)
51544	***C 07 K 19/00***	(2006.01)
	C 07 K 14/705	(2006.01)
51545	***C 07 D 487/04***	(2006.01)
	A 61 P 29/00	(2006.01)
	A 61 P 25/24	(2006.01)
	A 61 K 31/505	(2006.01)
	A 61 P 25/22	(2006.01)
	A 61 P 25/30	(2006.01)
51546	***C 07 D 231/12***	(2006.01)
	C 07 D 401/10	(2006.01)
	A 61 P 37/02	(2006.01)
	C 07 D 413/10	(2006.01)
	A 61 K 31/415	(2006.01)

(11)	(51)	
51547	***C 07 D 263/32***	(2006.01)
	A 61 K 31/421	(2006.01)
	C 07 D 277/30	(2006.01)
	A 61 K 31/426	(2006.01)
51548	***C 07 D 401/04***	(2006.01)
	C 07 D 405/12	(2006.01)
	C 07 D 417/12	(2006.01)
	A 61 P 35/00	(2006.01)
	C 07 D 401/14	(2006.01)
	C 07 D 405/14	(2006.01)
	A 61 K 31/506	(2006.01)
51549	***C 07 D 213/82***	(2006.01)
	C 07 D 251/18	(2006.01)
	C 07 D 403/08	(2006.01)
	C 07 D 498/04	(2006.01)
	A 61 P 35/00	(2006.01)
	C 07 D 239/48	(2006.01)
	C 07 D 403/04	(2006.01)
	C 07 D 473/32	(2006.01)
	A 61 K 31/505	(2006.01)
51550	***C 07 D 451/04***	(2006.01)
	A 61 K 31/46	(2006.01)
	A 61 P 29/00	(2006.01)
51551	***C 07 D 333/38***	(2006.01)
51552	***G 01 R 15/24***	(2006.01)
	G 02 F 1/09	(2006.01)
	G 01 R 29/12	(2006.01)
51553	***A 43 B 7/08***	(2006.01)
	A 43 B 7/12	(2006.01)
51554	***C 07 D 223/16***	(2006.01)
51555	***C 07 C 275/24***	(2006.01)
	A 61 P 29/00	(2006.01)
	A 61 K 31/17	(2006.01)
51556	***C 07 D 487/04***	(2006.01)
	A 61 P 9/08	(2006.01)
	A 61 K 31/505	(2006.01)
51557	***C 07 D 403/04***	(2006.01)
	C 07 D 453/02	(2006.01)
	C 07 D 409/04	(2006.01)
	C 07 D 253/06	(2006.01)
	C 07 D 405/04	(2006.01)
51558	***H 01 H 71/02***	(2006.01)
	H 01 H 83/04	(2006.01)
	H 01 H 71/12	(2006.01)
51559	***C 12 N 15/86***	(2006.01)
	A 61 K 48/00	(2006.01)
	C 12 N 15/861	(2006.01)
51560	***A 61 K 31/495***	(2006.01)
	A 61 P 25/04	(2006.01)
	A 61 P 25/26	(2006.01)
	A 61 P 25/22	(2006.01)
	C 07 D 295/08	(2006.01)
	A 61 P 25/24	(2006.01)
	A 61 P 25/28	(2006.01)

ИНДЕКС БРОЈЕВА ПАТЕНАТА ПРЕМА МКП

INDEX OF PATENTS ACCORDING TO IPC

(51)		(11)
A 01 N 47/12	(2006.01)	51504
A 43 B 13/16	(2006.01)	51509
A 43 B 7/08	(2006.01)	51553
A 43 B 7/12	(2006.01)	51509
A 43 B 7/12	(2006.01)	51510
A 43 B 7/12	(2006.01)	51553
A 61 K 9/00	(2006.01)	51506
A 61 K 9/00	(2006.01)	51527
A 61 K 9/00	(2006.01)	51532
A 61 K 9/02	(2006.01)	51508
A 61 K 9/20	(2006.01)	51527
A 61 K 9/22	(2006.01)	51507
A 61 K 9/22	(2006.01)	51508
A 61 K 31/00	(2006.01)	51519
A 61 K 31/01	(2006.01)	51529
A 61 K 31/095	(2006.01)	51529
A 61 K 31/13	(2006.01)	51529
A 61 K 31/13	(2006.01)	51540
A 61 K 31/17	(2006.01)	51555
A 61 K 31/19	(2006.01)	51532
A 61 K 31/352	(2006.01)	51521
A 61 K 31/353	(2006.01)	51521
A 61 K 31/357	(2006.01)	51521
A 61 K 31/381	(2006.01)	51526
A 61 K 31/415	(2006.01)	51546
A 61 K 31/4164	(2006.01)	51532
A 61 K 31/4178	(2006.01)	51526
A 61 K 31/4192	(2006.01)	51543
A 61 K 31/42	(2006.01)	51517
A 61 K 31/421	(2006.01)	51547
A 61 K 31/426	(2006.01)	51547
A 61 K 31/428	(2006.01)	51527
A 61 K 31/433	(2006.01)	51530
A 61 K 31/4422	(2006.01)	51534
A 61 K 31/4436	(2006.01)	51526
A 61 K 31/4439	(2006.01)	51526
A 61 K 31/444	(2006.01)	51526
A 61 K 31/444	(2006.01)	51541
A 61 K 31/46	(2006.01)	51506
A 61 K 31/46	(2006.01)	51550
A 61 K 31/4745	(2006.01)	51527
A 61 K 31/495	(2006.01)	51560
A 61 K 31/496	(2006.01)	51526
A 61 K 31/505	(2006.01)	51545
A 61 K 31/505	(2006.01)	51549

(51)		(11)
A 61 K 31/505	(2006.01)	51556
A 61 K 31/506	(2006.01)	51548
A 61 K 31/515	(2006.01)	51542
A 61 K 31/517	(2006.01)	51519
A 61 K 31/519	(2006.01)	51516
A 61 K 31/519	(2006.01)	51519
A 61 K 31/546	(2006.01)	51506
A 61 K 31/549	(2006.01)	51518
A 61 K 31/55	(2006.01)	51534
A 61 K 31/56	(2006.01)	51537
A 61 K 31/565	(2006.01)	51537
A 61 K 31/568	(2006.01)	51537
A 61 K 31/722	(2006.01)	51507
A 61 K 31/785	(2006.01)	51507
A 61 K 33/08	(2006.01)	51507
A 61 K 36/28	(2006.01)	51508
A 61 K 36/53	(2006.01)	51508
A 61 K 38/24	(2008.04)	51505
A 61 K 39/02	(2006.01)	51536
A 61 K 39/116	(2006.01)	51536
A 61 K 45/06	(2006.01)	51540
A 61 K 47/14	(2006.01)	51537
A 61 K 48/00	(2006.01)	51559
A 61 K 133/00	(2006.01)	51508
A 61 K 135/00	(2006.01)	51508
A 61 P 3/00	(2006.01)	51530
A 61 P 3/06	(2006.01)	51521
A 61 P 3/10	(2006.01)	51521
A 61 P 3/10	(2006.01)	51543
A 61 P 3/12	(2006.01)	51507
A 61 P 5/26	(2006.01)	51537
A 61 P 7/00	(2006.01)	51507
A 61 P 9/08	(2006.01)	51556
A 61 P 9/10	(2006.01)	51519
A 61 P 9/10	(2006.01)	51534
A 61 P 13/12	(2006.01)	51507
A 61 P 15/02	(2006.01)	51508
A 61 P 15/08	(2006.01)	51537
A 61 P 15/08	(2008.04)	51505
A 61 P 17/00	(2006.01)	51530
A 61 P 19/02	(2006.01)	51517
A 61 P 25/00	(2006.01)	51518
A 61 P 25/00	(2006.01)	51530
A 61 P 25/04	(2006.01)	51560
A 61 P 25/22	(2006.01)	51545

(51)		(11)
A 61 P 25/22	(2006.01)	51560
A 61 P 25/24	(2006.01)	51545
A 61 P 25/24	(2006.01)	51560
A 61 P 25/26	(2006.01)	51560
A 61 P 25/28	(2006.01)	51516
A 61 P 25/28	(2006.01)	51540
A 61 P 25/28	(2006.01)	51560
A 61 P 25/30	(2006.01)	51545
A 61 P 29/00	(2006.01)	51541
A 61 P 29/00	(2006.01)	51545
A 61 P 29/00	(2006.01)	51550
A 61 P 29/00	(2006.01)	51555
A 61 P 31/04	(2006.01)	51506
A 61 P 31/18	(2006.01)	51529
A 61 P 35/00	(2006.01)	51526
A 61 P 35/00	(2006.01)	51548
A 61 P 35/00	(2006.01)	51549
A 61 P 37/02	(2006.01)	51546
B 21 D 13/04	(2006.01)	51520
B 21 D 13/10	(2006.01)	51520
C 07 C 275/24	(2006.01)	51555
C 07 D 211/16	(2006.01)	51515
C 07 D 213/61	(2006.01)	51541
C 07 D 213/82	(2006.01)	51549
C 07 D 215/18	(2006.01)	51528
C 07 D 223/16	(2006.01)	51554
C 07 D 231/12	(2006.01)	51546
C 07 D 239/48	(2006.01)	51549
C 07 D 239/54	(2006.01)	51542
C 07 D 239/94	(2006.01)	51515
C 07 D 249/18	(2006.01)	51543
C 07 D 251/18	(2006.01)	51549
C 07 D 253/06	(2006.01)	51557
C 07 D 261/12	(2006.01)	51517
C 07 D 263/32	(2006.01)	51547
C 07 D 277/30	(2006.01)	51547
C 07 D 285/08	(2006.01)	51530
C 07 D 285/28	(2006.01)	51518
C 07 D 295/08	(2006.01)	51560
C 07 D 333/38	(2006.01)	51551
C 07 D 401/04	(2006.01)	51542
C 07 D 401/04	(2006.01)	51548
C 07 D 401/06	(2006.01)	51542
C 07 D 401/06	(2006.01)	51543
C 07 D 401/10	(2006.01)	51546
C 07 D 401/12	(2006.01)	51515
C 07 D 401/12	(2006.01)	51542
C 07 D 401/14	(2006.01)	51542
C 07 D 401/14	(2006.01)	51548
C 07 D 403/04	(2006.01)	51542

(51)		(11)
C 07 D 403/04	(2006.01)	51542
C 07 D 403/04	(2006.01)	51549
C 07 D 403/04	(2006.01)	51557
C 07 D 403/06	(2006.01)	51543
C 07 D 403/08	(2006.01)	51549
C 07 D 403/10	(2006.01)	51542
C 07 D 403/12	(2006.01)	51542
C 07 D 405/04	(2006.01)	51557
C 07 D 405/12	(2006.01)	51548
C 07 D 405/14	(2006.01)	51548
C 07 D 409/04	(2006.01)	51557
C 07 D 409/14	(2006.01)	51526
C 07 D 413/04	(2006.01)	51542
C 07 D 413/06	(2006.01)	51516
C 07 D 413/10	(2006.01)	51546
C 07 D 413/12	(2006.01)	51516
C 07 D 413/12	(2006.01)	51542
C 07 D 413/14	(2006.01)	51516
C 07 D 413/14	(2006.01)	51542
C 07 D 417/04	(2006.01)	51542
C 07 D 417/12	(2006.01)	51530
C 07 D 417/12	(2006.01)	51548
C 07 D 451/04	(2006.01)	51550
C 07 D 453/02	(2006.01)	51557
C 07 D 473/32	(2006.01)	51549
C 07 D 487/04	(2006.01)	51516
C 07 D 487/04	(2006.01)	51545
C 07 D 487/04	(2006.01)	51556
C 07 D 498/04	(2006.01)	51549
C 07 D 513/04	(2006.01)	51542
C 07 K 1/18	(2006.01)	51512
C 07 K 14/555	(2006.01)	51512
C 07 K 14/56	(2006.01)	51512
C 07 K 14/705	(2006.01)	51544
C 07 K 14/76	(2006.01)	51512
C 07 K 19/00	(2006.01)	51544
C 12 N 9/12	(2006.01)	51525
C 12 N 15/86	(2006.01)	51559
C 12 N 15/861	(2006.01)	51559
D 06 M 15/41	(2006.01)	51538
E 02 D 29/12	(2006.01)	51539
E 02 D 29/14	(2006.01)	51539
E 04 C 2/00	(2006.01)	51520
F 01 K 7/16	(2006.01)	51511
F 01 K 21/04	(2006.01)	51511
F 15 D 1/00	(2006.01)	51524
F 16 K 17/00	(2006.01)	51513
F 16 L 21/04	(2006.01)	51514
F 22 B 37/04	(2006.01)	51533
F 22 B 37/10	(2006.01)	51533

(51)		(11)
F 22 B 37/22	(2006.01)	51533
F 22 G 3/00	(2006.01)	51533
F 24 H 1/00	(2006.01)	51522
F 24 H 1/08	(2006.01)	51522
F 24 H 1/18	(2006.01)	51522
F 24 H 1/20	(2006.01)	51522
G 01 N 33/68	(2006.01)	51523
G 01 R 15/24	(2006.01)	51552

(51)		(11)
G 01 R 29/12	(2006.01)	51552
G 02 F 1/09	(2006.01)	51552
G 07 D 7/12	(2008.04)	51531
H 01 H 71/02	(2006.01)	51558
H 01 H 71/12	(2006.01)	51558
H 01 H 83/04	(2006.01)	51558
H 05 B 6/00	(2006.01)	51535

ПРЕСТАНАК ВАЖНОСТИ РЕГИСТРОВАНИХ ПАТЕНАТА

Termination of validity of Registred Patents

1. Истеком законског рока од 20 година:

Патент бр. **48394** чији је носилац Институт за експерименталну фонетику и патологију говора, Београд, Господар Јованова 35, RS, престао је да важи дана 16.04.2011. године.

Патент бр. **48049** чији је носилац ELI LILLY AND COMPANY LIMITED, BASINGSTOKE, HAMPSHIRE,GB, престао је да важи дана 25.04.2011. године.

Патент бр. **48741** чији је носилац BIOTA SCIENTIFIC MANAGEMENT PTY LTD., LEVEL 4, 616 ST.KILDA ROAD, MELBOURNE VIC 3004,AU, престао је да важи дана 25.04.2011. године.

Патент бр. **49094** чији је носилац PFIZER INC., 235 EAST 42 ND STREET, NEW YORK, N.Y., US, престао је да важи дана 11.05.2011. године.

Патент бр. **47237** чији је носилац ENI S.P.A PIAZZALE E.MATTEI,1-00144 ROME, IT, престао је да важи дана 17.05.2011. године.

Патент бр. **48765** чији је носилац SANOFI-AVENTIS DEUTSCHLAND GMBH., D-65926 FRANKFURT AM MAIN, DE, престао је да важи дана 21.05.2011 године.

Патент бр. **47891** чији је носилац HORST SCHULTZ, HOCHNEIM, DE, престао је да важи дана 25.05.2011. године.

Патент бр. **49138** чији је носилац AKTIEBOLAGET ASTRA, S-151 85, SÖDERTÄLJE, SE, престао је да важи дана 30.05.2011. године.

Патент бр. **48395** чији је носилац TETRA PAK HOLDINGS SA., PULLY, CH, престао је да важи дана 05.06.2011. године.

Патент бр. **48331** чији је носилац INDUSTRIALE CHIMICA S.R.L., MILANO, IT, престао је да важи дана 07.06.2011. године.

Патент бр**. 48855** чији је носилац ASTRAZENECA UK LIMITED, 15 STANHOPE GATE, LONDON W1K 1LN,GB, престао је да важи дана 07.06.2011. године

2. Због неплаћања таксе за одржавање права у периоду од 06. 10. 2010. до 05. 12. 2010. године:

Патент бр. **49376** чији је носилац Нешић Миодраг, Живица, 12000 Пожаревац, RS, престао је да важи дана 14.10.2010. године.

Патент бр. **49621** чији је носилац Лопар Милош, Момчила Радивојевића 53, 11080 Земун, RS, престао је да важи дана 12.10.2010. године.

Патент бр. **49724** чији је носилац BOEHRINGER INGELHEIM PHARMA GMBH & CO.KG, D-55216 INGELHEIM/RHEIN, DE, престао је да важи дана 10.10.2010. године.

Патент бр. **49814** чији је носилац TAFRA MILORAD, BOKELJSKIH MORNARA 2, 88000 HERCEG NOVI, ME, престао је да важи дана 15.10.2010. године.

Патент бр. **49848** чији је носилац NEKTAR THERAPEUTICS, 150 INDUSTRIAL ROAD, SAN CARLOS, CA 94070,US, престао је да важи дана 08.10.2010. године.

Патент бр. **50037** чији је носилац Ђукић Слободан, Петра Кочића 1А, 22320 Инђија, RS, престао је да важи дана 22.10.2010. године.

Патент бр. **50211** чији је носилац MIKON KFT. MÉRNÖKI, MÜVÉSZETI ÉS IDEGENFORGALMI KFT. ALKOTÁS U.31 FS2T., H-1123 BUDAPEST, HU, престао је да важи дана 19.10.2010. године.

Патент бр.**50389** чији је носилац BAYER SCHERING PHARMA AKTIENGESELLSCHAFT, MÜLLERSTRASSE 178, 13353 BERLIN, DE, престао је да важи дана 18.10.2010. године.

Патент бр. **50492** чији је носилац Баталовић Веслин, Јурија Гагарина 146/62, 1070 Нови Београд, RS, престао је да важи дана 22.10.2010. године.

Патент бр. **50760** чији је носилац ASTRAZENECA AB S-151 85, SÖDERTÄLJE, SE, престао је да важи дана 14.10.2010. године.

Патент бр. **50952** чији је носилац BALL PACKAGING EUROPE GMBH, KAISERSWERTHER STRASSE 115, 40880 RATINGEN, DE, престао је да важи дан а 20.10.2010. године.

Патент бр. **50991** чији су носиоци Тодоровић Андреја, Лоле Рибара 17/8, 38220 Косовска Митровица, RS, и Вукосављевић Томислав, Рада Вилотијевића 2/54,36000 Краљево, RS, престао је да важи дана 18.10.2010. године.

Патент бр. **51400** чији је носилац PLASMATECH d.o.o., Булевар Војводе Мишића 17,11000 Београд, RS, престао је да важи 24.10.2010. године.

Патент бр. **51488** чији је носилац KRKA,TOVARNA ZDRAVIL D.D. ŠMARJEŠKA CESTA 6, 8501 NOVO MESTO, SI, престао је да важи дана 17.10.2010. године.

Патент бр. **51524** чији је носилац Рајић Владимир, Цара Лазара 101, 21234 Бачки Јарак, RS, престао је да важи дана 10.10.2010. године.

Патент бр. **48310** чији је носилац PHIBRO ANIMAL HEALTH CORPORATION,65 CHALLENGER ROAD, RIDGEFIELD PARK, NEW JERSEY, US, престао је да важи дана 16.11.2010. године.

Патент бр. **49243** чији је носилац Руњевац Невен, Гандијева 81/33, 11070 Нови Београд, RS, престао је да важи дана 05.11.2010. године.

Патент бр. **49286** чији је носилац PLAN HOLDING GMBH, HANS GASSER, PLATZ,5/3, A-9500 VILLACH, AT, престао је да важи дана 23.11.2010. године.

Патент бр. **49457** чији је носилац BOEHRINGER INGELHEIM INTERNATIONAL GMBH, D-55216 INGELHEIM AM RHEIN, DE, престао је да важи дана 09.11.2010. године.

Патент бр. **50208** чији су носиоци SMITHKLINE BEECHAM P.L.C. NEW HORIZONS COURT, BRENTFORD, MIDDLESEX TW8 9EP,GB, и SMITHKLINE BEECHAM CORPORATION. ONE FRANKLIN PLAZA, PHILADELPHIA, PA 19103, US, престао је да важи дана 13.11.2010. године.

Патент бр. **50286** чији је носилац BOEHRINGER INGELHEIM PHARMA GMBH & CO.KG, BINGERSTRASSE 172, INGELHEIM AM RHEIN, DE, престао је да важи дана 10.11.2010. године.

Патент бр. **50356** чији су носиоци Тодоровић Андреја, Лоле Рибара 17/8, 38220 Косовска Митровица, RS, и Вукосављевић Томислав, Рада Вилотијевића 2/54,36000 Краљево, RS, престао је да важи дана 09.11.2010. године.

Патент бр. **50476** чији је носилац PFIZER INC.235 EAST 42ND STREET,NEW YORK, N.Y.10017, US, престао је да важи дана 12.10.2010. гдине.

Патент бр. **50503** чији је носилац Ковачић Никола, Врбашка 19, 21480 Србобран, RS, престао је да важи дана 21.11.2010. године.

Патент бр. **50564** чији је носилац ANSALDO SEGNALAMENTO FERROVIARIO S.P.A., LOKALITA TITO SCALO 20NA INDUSTRIALE, 85050 TITO, IT, престао је дажи дана 02.12.2010. године.

Патент бр. **50739** чији је носилац VAN ELS HANS JOSEF, MEINECKE STRASSE 46, 40474 DÜSSELDORF, DE, престао је да важи дана 27.11.2010. године.

Патент бр. **50754** чији је носилац WHITEHEAD INSTITUTE FOR BIOMEDICAL RESEARCH, NINE CAMBRIDGE CENTER, CAMBRIDGE, MA 02142, US, престао је да важи дана 03.12.2010. године.

Патент бр. **50937** чији је носилац MENARINI INTERNATIONAL OPERATIONS LUXEMBOURG S.A., 1.AVENUE DE LA GARE, L-1611 LUXEMBOURG, LU, престао је да важи дана 30.11.2010. године.

Патент бр. **51005** чији је носилац SCHERING AKTIENGESELL SCHAFT 13342, BERLIN, DE, престао је да важи дана 06.11.2010. године.

Патент бр. **51086** чији је носилац Станић Богдан, Васе Стајића 23, 21000 Нови Сад, RS, престао је да важи дана 05.11.2010. године.

Патент бр. **51087** чији је носилац WARNER LAMBERT COMPANY LLC., 201 TABOR ROAD, MORRIS PLAINS, NJ 07950, US, престао је да важи дана 15.11.2010. године.

Патент бр. **51313** чији је носилац ACINO PHARMA AG BIRSWEG 2, 4253 LIESBERG, CH, престао је да важи дана 10.11.2010. године.

Патент бр. **51392** чији је носилац THE ROGOSIN INSTITUTE 505 EAST 70TH STREET, NEW YORK, NY 10021, US, престао је да важи дана 15.11.2010. године.

МАЛИ ПАТЕНТИ
PETTY PATENTS

(51) ***B 60 R 1/00*** (2006.01) **(11) 1195 U**
(13) U
(21) MP-2010/0048 (22) 21.06.2010.
(54) REDNO-PARALELNA RELEJNA VEZA SIJALICA
IN-LINE PARALLEL RELAY LIGHT BULB
(73) ANTIĆ, Branko, Karađorđeva 31, 34000 Kragujevac, RS
(72) ANTIĆ, Branko, Karađorđeva 31, 34000 Kragujevac, RS
(57) Redno - paralelna relejna veza sijalica je **naznačena time** što se po potrebi ostvaruje redna električna veza sijaličnih vlakana (5) i (8) oborenog sa sijaličnim vlaknima (6) i (9) dugog svetla u sijalicama (4) i (7) prednjih farova.

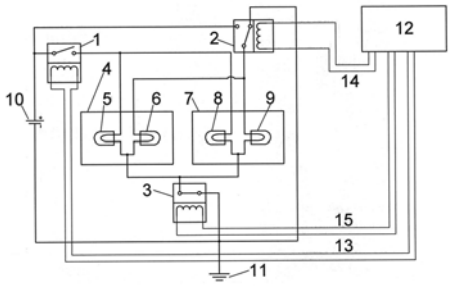

(51) ***B 60 R 25/02*** (2006.01) **(11) 1197 U**
E 05 B 65/22 (2006.01) **(13) U**
(21) MP-2010/0079 (22) 15.10.2010.
(54) NAPRAVA ZA SPREČAVANJE NEDOZVOLJENE UPOTREBE ILI KRAĐE MOTORNOG VOZILA ZABRAVLJIVANJEM UPRAVLJAČKOG MEHANIZMA
DEVICE FOR PREVENTING UNAUTHORIZED USE OR THEFT OF MOTOR VEHICLE BY LOCKING STEERING MECHANISM
(73) MIJOKOV, Đorđe, Majora Milana Malnarića 15, 11070 Novi Beograd, RS
(72) MIJOKOV, Đorđe, Majora Milana Malnarića 15, 11070 Novi Beograd, RS
(74) VLAHOVIĆ, Slobodan, Radoja Dakića 35/32, 11070 Novi Beograd, RS
(57) Naprava za sprečavanje nedozvoljene upotrebe ili krađe motornog vozila zabravljivanjem upravljačkog mehanizma, koja se postavlja na vratilo upravljača i koja se sastoji od kućišta sa u donjem delu ugrađenom bravom koja okretanjem ključa aktivira podizačem zasun koji ulazi kroz donju prstenastu čauru i ulazi u otvor na vratilu, **naznačen time**, što su na gornjem delu kućišta (1) izvedeni profilisani dvodelni držači (2, 3) sa umetnutom dvodelnom čauraom (5, 6) za pričvršćivanje na vratilo upravljača i što je na donjem delu kućišta (1) izveden otvor (11) za ključ.

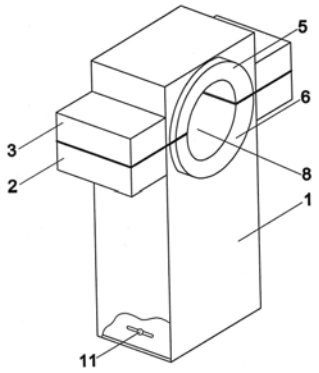

(51) ***B 65 D 5/44*** (2006.01) **(11) 1196 U**
(13) U
(21) MP-2010/0008 (22) 14.01.2010.
(30) RS 14.01.2010. MP-2010/0008
(54) ZATVARAČ SA OTVOROM ZA ULAZAK VAZDUHA U KARTON AMBALAŽU PRILIKOM ISTICANJA TEČNOSTI
PLUG WITH OPENING FOR AIR ENTERING THE PAPERBOARD PACKAGING WHILE POURING OUT LIQUID
(73) JOVANOV, Bogdan, Sterijina 18/13, 26300 Vršac, RS
(72) JOVANOV, Bogdan, Sterijina 18/13, 26300 Vršac, RS
(57) Zatvarač sa otvorom za ulazak vazduha u karton ambalažu (7) prilikom isticanja tečnostij **naznačen je time** što je u zidu (1) ambalaže (8), izveden otvor (9) preko kojeg je u osi otvora (9), čvrsto vezan unutrašnji deo (2) zatvarača sa oduškom i stoje spoljašnji deo (3) zatvarača sa oduškom obrtno spojen sa unutrašnjim delom (2).
Prijava sadrži još 1 zavisan patentni zahtev.

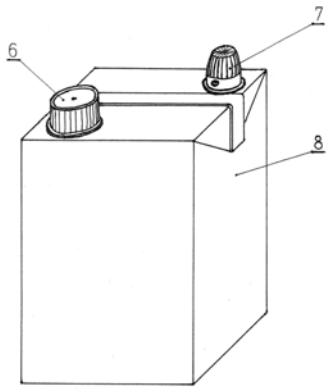

(51) ***G 06 F 17/30*** (2006.01) **(11) 1193 U**
G 06 Q 10/00 (2008.04) **(13) U**
(21) MP-2010/0067 (22) 10.08.2010.
(30) SK 10.08.2009. PV87-2009
(54) POVEZIVANJE SISTEMA VIRTUALNE BIBLIOTEKE
LINKING OF VIRTUAL LIBRARY SYSTEMS
(73) KOMENSKY S.R.O., Park Mládeže 1/360, SK-040 01 Košice, SK
(72) RYBÀR, Slavomir, Palárikova 7, SK-040 01 Košice, SK
(74) ALEKSIĆ, Nenad, Vasilija Ivanovića 12, 11000 Beograd, RS
(57) Повезивање система виртуалне библиотеке намењене за чување, размену и приступ електронским педагошким материјалима, којег чини најмање један провајдер блок и најмање један приступни блок, **назначено тиме** што је најмање један провајдер блок (1) повезан преко интернет мреже (4) на најмање један провајдер пријавни блок (31) сервера (3) базе података, који је повезан преко преносног канала (5) са најмање једним провајдер оперативним блоком (32), који је повезан преко преносног канала (5) са најмање једним посебним педагошким модулом (331) виртуалне библиотеке (33), који је повезан преко најмање једног преносног канала (5) са најмање једним приступним образовним модулом (333) виртуалне библиотеке (33), а најмање један приступни блок (2) је повезан преко интернет мреже (4) са најмање једним приступним пријавним блоком (35), који је преко преносног канала (5) повезан са најмање једним приступним претраживачким блоком (36), који је преко преносног канала (5) повезан са најмање једним приступним образовним модулом (333).

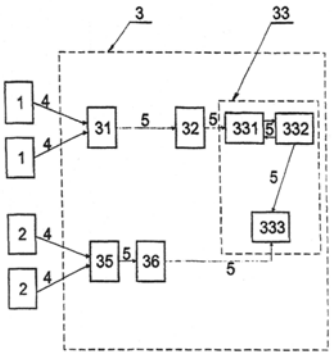

(51) ***H 03 M 1/00*** (2006.01) **(11) 1194 U**
(13) U
(21) MP-2010/0037 (22) 30.04.2010.
(54) KOREKTOR BRZINE KRETANJA VOZILA U FUNKCIJI VETRA
VEHICLE SPEED CORRECTION DEVICE IN THE FUNCTION OF WIND
(73) PALMAREVIĆ, Todor, Varvarinska 13, 11000 Beograd, RS
(72) PALMAREVIĆ, Todor, Varvarinska 13, 11000 Beograd, RS
(57) Korektor brzine kretanja u funkciji vetra je saobraćajni znak upozorenja koji se sastoji iz tri dela koji čine jednu celinu od kojih prvi(l) predstavlja generator analognog signala, drugog dela gde je smeštena kompletna alektronika, (3), (4) i (5) i trećeg dela uredjaja za napajanje snabdeven AKU baterijom, **naznačeno time**, što analogni signal iz generatora (1) pretvara u digitalni (3) i dalje preko dekodera (4) pretvara u broj koji je u funkciji analognog signala iz (1).

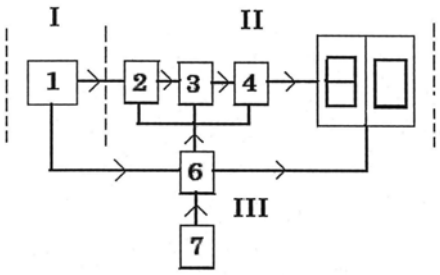

ИНДЕКСНЕ ТАБЕЛЕ ЗА МАЛЕ ПАТЕНТЕ

INDEX TABLES FOR PETTY PATENTS

- **ИНДЕКС НОСИЛАЦА МАЛИХ ПАТЕНАТА (стр. 1606)**
- PETTY PATENT OWNER INDEX (p. 1606)
- **ИНДЕКС БРОЈЕВА МАЛИХ ПАТЕНАТА (стр. 1606)**
- PETTY PATENT NUMBER INDEX (p. 1606)
- **ИНДЕКС БРОЈЕВА МАЛИХ ПАТЕНАТА ПРЕМА МКП (стр. 1606)**
- INDEX OF PETTY PATENTS ACCORDING TO IPC (p. 1606)

ИНДЕКС НОСИЛАЦА МАЛИХ ПАТЕНАТА

PETTY PATENT OWNER INDEX

(73)	(51)	(21)	(30)	(11)
ANTIĆ, Branko	***B 60 R 1/00*** (2006.01)	MP-2010/0048		1195 U
JOVANOV, Bogdan	***B 65 D 5/44*** (2006.01)	MP-2010/0008	RS 14.01.2010. MP-2010/0008	1196 U
KOMENSKY S.R.O.	***G 06 F 17/30*** (2006.01) ***G 06 Q 10/00*** (2008.04)	MP-2010/0067	SK 10.08.2009. PV87-2009	1193 U
MIJOKOV, Đorđe	***B 60 R 25/02*** (2006.01) ***E 05 B 65/22*** (2006.01)	MP-2010/0079		1197 U
PALMAREVIĆ, Todor	***H 03 M 1/00*** (2006.01)	MP-2010/0037		1194 U

ИНДЕКС БРОЈЕВА МАЛИХ ПАТЕНАТА

PETTY PATENT NUMBER INDEX

(11)	(51)
1193 U	***G 06 F 17/30*** (2006.01) ***G 06 Q 10/00*** (2008.04)
1194 U	***H 03 M 1/00*** (2006.01)
1195 U	***B 60 R 1/00*** (2006.01)
1196 U	***B 65 D 5/44*** (2006.01)
1197 U	***B 60 R 25/02*** (2006.01) ***E 05 B 65/22*** (2006.01)

ИНДЕКС БРОЈЕВА МАЛИХ ПАТЕНАТА ПРЕМА МКП

INDEX OF PETTY PATENTS ACCORDING TO IPC

(51)		(11)
B 60 R 1/00	(2006.01)	1195 U
B 60 R 25/02	(2006.01)	1197 U
B 65 D 5/44	(2006.01)	1196 U
E 05 B 65/22	(2006.01)	1197 U
G 06 F 17/30	(2006.01)	1193 U
G 06 Q 10/00	(2008.04)	1193 U
H 03 M 1/00	(2006.01)	1194 U

ПРЕСТАНАК ВАЖНОСТИ РЕГИСТРОВАНИХ МАЛИХ ПАТЕНАТА

Termination of validity of Registred Petty Patents

1. Због неплаћања таксе за одржавање права у периоду од 06.10.2010. до 05.12.2010. године:

Мали патент бр. **844** чији је носилац Институт ИМС а.д. Булевар Војводе Мишића 43, 11000 Београд, RS , престао је да важи дана 12.10.2010. године.

Мали патент бр. **942** чији је носилац Милинковић Зоран, Филипа Вишњића 39/2,11080 Земун, RS, престао је да важи дана 27.10.2010. године.

Мали патент бр. **1056** чији је носилац Удружење дистрофичара расинског округа, Глигорија Диклића 45, 37000 Крушевац, RS, престао је да важи дана 09.10.2010. године.

Мали патент бр. **1065** чији су носиоци мр.инж.Владимир Ћирић, Булевар Николе Тесле 149/15,18000 Ниш, RS, и инж.Драган Тошић, Вуковарска 2/24, 18300 Пирот, RS, престао је да важи дана 24.10.2010. године.

Мали патент бр. **523** чији је носилац Којо Љубомир, Кумодрашка 109,11000 Београд,, престао је да важи дана 09.11.2010. године.

Мали патент бр. **784** чији је носилац Бабић Јован, Матице Српске 64/ВИ-59 11000 Београд-Миријево, RS, престао је да важи дана 08.11.2010. године.

Мали патент бр. **821** чији је носилац Кнежевић Никола, Буковачки пут 85, 21132 Петроварадин, RS, престао је да важи дана 10.11.2010. године.

Мали патент бр. **859** чији је носилац SB GRADNJA PLUS D.O.O. Љубе Дидића 8/12, 11000 Београд, RS, престао је да важи дана 03.11.2010. године.

Мали патент бр. **954** чији су носиоци Воркапић Бранко, Војводе Добрњца 6, 11000 Београд, RS, и Ристић Обрад, др Нике Миљанића 8/15, 11060 Београд, RS, престао је да важи дана 13.11.2010. године.

Мали патент бр. **1002** чији је носилац Стричевић Илија, Братства јединства 66, 26315 Владимировац, RS, престао је да важи дана 13.11.2010. године.

Мали патент бр. **1041** чији је носилац Буха Ђорђо, Браће Јерковић 133, 11000 Београд, RS, престао је да важи дана 02.12.2010. године.

Мали патент бр. **1054** чији је носилац Петровић Бранислав, Малешка 29, 11000 Београд, RS, престао је да важи дана 29.10.2010. године.

Мали патент бр. **1057** чији је носилац Милошевић Драган, Његошева 12, 35210 Свилајнац, RS, престао је да важи дана 20.11.2010. године.

Мали патент бр. **1079** чији је носилац Васић Миланко, Дринске дивизије 36, 15000 Шабац, RS, престао је да важи дана 23.10.2010. године.

ЗАХТЕВИ ЗА ПРОШИРЕЊЕ ЕВРОПСКИХ ПРИЈАВА ПАТЕНАТА

Requests for the Extension of the effects of European Patent Applications

Објава захтева за проширење европских пријава патената - библиграфски подаци

Publication of Requests for the Extension of the effects of European Patent Applications

Индекси захтева за проширење европских пријава патената – бројеви, подносиоци и класификационе ознаке

Indexes of Requests for the Extension of the effects of European Patent Applications – Numbers, Applicants and Clasification Symbols

Објава повучених захтева за проширење европских пријава патената

Publication of withdrawn applications for the Ehtension of the effects of European Patent Applications

Индекси повучених захтева за проширење европских пријава патената – бројеви, подносиоци и класификационе ознаке

Indexes of withdrawn applications for the Ehtension of the effects of European Patent Applications – Numbers, Applicants and Clasification Symbols

МЕЂУНАРОДНИ КОДОВИ ЗА ИДЕНТИФИКАЦИЈУ БИБЛИОГРАФСКИХ ПОДАТАКА ПАТЕНАТА -WIPO ST. 9

RECOMMENDATION CONCERNING BIBLIOGRAPHIC DATA ON AND RELATING TO PATENTS - **WIPO ST. 9**

(51)	**Класификациона ознака по Међународној класификацији патената**		**Број објаве европске пријаве патента**
(23)	Датум повлачења/одбијања захтева		
(30)	Подаци о праву првенства међународне пријаве патента		
(86)	Број и датум подношења међународне пријаве патента		
(96)	Број европске пријаве патента, датум подношења и језик на којем је пријава поднета		
(87)	Број и датум међународне објаве пријаве патента		
(97)	Број објаве европске пријаве патента, датум објаве и језик на којем је пријава објављена		
(41)	Датум када је податак постао доступан јавности		
(54)	**Назив проналаска на енглеском језику**		
(71)	Подаци о подносиоцу пријаве		
(72)	Подаци о проналазачу		
(74)	Подаци о пуномоћнику		

* Међународне пријаве које се објављују према члану 21. Уговора о сарадњи у области пријава патената (PCT Ugovor) у смислу става 1. члана 158. Европске патентне конвенције (EURO-PCT prijave) означене су звездицом.

У овом броју Гласника објављујемо:

објаве захтеве за проширење европских пријава патената за Републику Србију и **објаве повучених захтева за проширење европских пријава патената за Републику Србију** из ***EPO Patent Bulletin*** **бр. 11/2011 –20/2011 (2011–03–16** до **2011–05–18)**.

– Више података о пријавама можете наћи у **European Patent Bulletin** (службено гласило Европског патентног завода) у склопу INID кода (97).

ОБЈАВА ЗАХТЕВА ЗА ПРОШИРЕЊЕ ЕВРОПСКИХ ПРИЈАВА ПАТЕНАТА

(51) (8) (2006.01) **WO 2009156472**
F 24D 13/02
F 28F 21/04
E 04C 2/52
(30) IN 25.06.2008. CH15402008
IN 01.09.2008. CH21402008
WO 22.09.2008. PCT/IN2008/000601
IN 14.05.2009. CH11222009
(86) PCT/EP2009057971 25.06.2009.
(96) WO 09769320.4 25.06.2009. En
(87) WO2009156472 30.12.2009. 200953
(97) WO 2009156472 30.12.2009. 200953 En
(54) A STONE PANEL
(71) Jacob, George, 249 3rd Cross Street 1st Main Road, Domlur Lind Stage Bangalore 650 071, IN;
English, Anne, No 249 3rd Cross 1st Main, Domalur, Bangalore 650 071, IN
(72) The designation of the inventor has not yet been filed
(74) McBride, Peter Hill, Murgitroyd & Company, Scotland House, 165-169 Scotland Street, Glasgow, G5 8PL, GB

(51) (8) **EP 2232972**
A 01B 33/08
(30) IT 26.03.2009. PD20090018 U
(96) EP 10156932.5 18.03.2010. It
(97) EP 2232972 29.09.2010. 201039 En
(54) Rotary harrow
(71) Maschio Gaspardo S.p.A., Via Marcello 73, 35011 Campodarsego (PD), IT
(72) Maschio, Egidio, via Marcello, 38, 35011, Campodarsego (PD), IT
(74) Cantaluppi, Stefano, et al, Cantaluppi & Partners S.r.l., Piazzetta Cappellato Pedrocchi, 18, 35122 Padova, IT

(51) (8) **EP 2279652**
A 01B 49/02
(30) DE 27.07.2009. 202009010188 U
(96) EP 10170025.0 19.07.2010. De
(97) EP 2279652 02.02.2011. 201105 De
(54) Grubber
(71) Treffler, Paul, Am Mühlgrund 4, 86554 Pöttmes-Echsheim, DE
(72) Treffler, Paul, Am Mühlgrund 4, 86554 Pöttmes-Echsheim, DE
(74) Charrier, Rapp & Liebau, Patentanwälte, Fuggerstrasse 20, 86150 Augsburg, DE

(51) (8) **EP 2218321**
A 01D 43/08
(30) BE 13.02.2009. 200900082
(96) EP 10153301.6 11.02.2010. En
(97) EP 2218321 18.08.2010. 201033 En
(54) A forage harvester having a blower
(71) CNH Belgium N.V., Leon Claeysstraat 3a, 8210 Zedelgem, BE
(72) Depestel, Bernard E.D., Karel Stroobandtstraat 12, 8730, Oedelem, BE
(74) CNH IP Department, CNH Belgium NV, Patent Department, Leon Claeysstraat 3A, 8210 Zedelgem, BE

(51) (8) **EP 2309841** *
A 01G 9/18
(30) IT 08.07.2008. BO20080429
(86) PCT/IT2009000294 03.07.2009.
(96) EP 09787770.8 03.07.2009. En
(87) WO2010004603 14.01.2010. 201002
(97) EP 2309841 20.04.2011. 201116 En
(54) APPARATUS FOR REDUCING CARBON DIOXIDE CONTAINED IN COMBUSTION SMOKES
(71) Leon Engineering S.p.a., Via G. Leonardelli 3, 47891 Dogana (R.S.M.), SM
(72) AMADESI, Paolo, Via Andrea Costa 152, I-40134 Bologna (BO), IT
(74) Montebelli, Marco, Brema SRL, Piazza Enriquez, 22/c, SM-47891 Dogana, SM

(51) (8) **EP 2306806** *
A 01G 25/16
(30) US 27.06.2008. 133343
(86) PCT/US2009049047 29.06.2009.
(96) EP 09771233.5 29.06.2009. En
(87) WO2009158702 30.12.2009. 200953
(97) EP 2306806 13.04.2011. 201115 En
(54) WIRELESS SENSOR SYSTEM FOR ENVIRONMENTAL MONITORING
(71) University of Maryland, Baltimore County, 1000 Hilltop Circle, Baltimore, MD 21250, US
(72) RAO, Govind, 10401 Northdale Road, Columbia, MD 21044, US;
KOSTOV, Yordan, 5495 Mystic Court, Columbia, MD 21044, US
(74) Glawe, Delfs, Moll, Patent- und Rechtsanwälte, Rothenbaumchaussee 58, 20148 Hamburg, DE

(51) (8) **EP 2299802** *
A 01G 31/00
A 01G 9/10
(30) NL 10.06.2008. 2001664
(86) PCT/NL2009050320 10.06.2009.
(96) EP 09762701.2 10.06.2009. Nl
(87) WO2009151320 17.12.2009. 200951
(97) EP 2299802 30.03.2011. 201113 En
(54) METHOD FOR MANUFACTURING A PLANT SUBSTRATE AND PLANT SUBSTRATE
(71) Recticel Holding Noord B.V., Spoorstraat 69, 4041 CL Kesteren, NL
(72) LIEVESTRO, Robert, Zülpichhof 4, NL-6662 CC Elst, NL;
HESSE, Huib, Voornestraat 1, NL-6922 EA Duiven, NL;
POPPE, Karel Romain, Molenstraat 21, B-9240 Zele, BE;
MORTELMANS, Rudi Frans, Gelaagstraat 108, B-9140 Temse, BE
(74) Jansen, Cornelis Marinus, et al, VEREENIGDE, Johan de Wittlaan 7, 2517 JR Den Haag, NL

(51) (8) **EP 2312933** *
A 01H 1/06
A 01H 1/04
A 01H 5/04
A 01H 5/10
(30) US 29.05.2008. 56880
US 16.03.2009. 160532
US 17.03.2009. 160749
(86) PCT/AU2009000666 28.05.2009.
(96) EP 09753338.4 28.05.2009. En
(87) WO2009143574 03.12.2009. 200949
(97) EP 2312933 27.04.2011. 201117 En
(54) PAPAVER SOMNIFERUM WITH HIGH CONCENTRATION OF CODEINE
(71) Tasmanian Alkaloids Pty. Ltd., 160 Birralee Road, Westbury, TAS 7303, AU
(72) FIST, Anthony J., 36 Beech Road, Norwood, Tasmania 7250, AU;
MILLER, James A.C., 110 Ingleman Road, Neerim South, Victoria 3831, AU;
GREGORY, Davina, 274 Wellington Street, South Launceston, Tasmania 7249, AU
(74) Almond-Martin, Carol, et al, Ernest Gutmann - Yves Plasseraud S.A.S., 88, Boulevard des Belges, 69452 Lyon Cedex 06, FR

(51) (8) **EP 2306813** *
A 01K 61/00
(30) NO 08.08.2008. 20083470
(86) PCT/NO2009000277 06.08.2009.
(96) EP 09764170.8 06.08.2009. No
(87) WO2010016769 11.02.2010. 201006
(97) EP 2306813 13.04.2011. 201115 En
(54) FISHFARMING PEN
(71) Maritime Oppdrett AS, Astrids vei 1, 1473 Lørenskog, NO
(72) HØIE, Jørn, Steinsgårdsveien 126, N-2032 Maura, NO
(74) Heggstad, Jon Dagson, Bryn Aarflot AS, P.O. Box 449 Sentrum, 0104 Oslo, NO

(51) (8) **EP 2303001** *
A 01K 67/00
A 61K 49/00
G 01N 33/00
(30) US 20.06.2008. 74437 P
(86) PCT/US2009046073 03.06.2009.
(96) EP 09767444.4 03.06.2009. En
(87) WO2009155133 23.12.2009. 200952
(97) EP 2303001 06.04.2011. 201114 En
(54) METHOD FOR TESTING EFFICACY OF TREATMENT OF NEUROLOGIC DISORDERS
(71) Centocor Ortho Biotech Inc., 800/850 Ridgeview Drive, Horsham, PA 19044, US
(72) JUNG, Sun-Yung, 500 Wick Lane, Blue Bell, PA 19422, US;
BIRCHLER, Mary, 109 Elizabeth Court, Malvern, PA 19355, US
(74) Goodfellow, Hugh Robin, Carpmaels & Ransford, One Southampton Row, London, WC1B 5HA, GB

(51) (8) **EP 2309846** *
A 01N 25/00
(30) US 22.07.2008. 82601 P
(86) PCT/US2009051457 22.07.2009.
(96) EP 09800969.9 22.07.2009. En
(87) WO2010011787 28.01.2010. 201004
(97) EP 2309846 20.04.2011. 201116 En
(54) PEST-CONTROL COMPOSITIONS AND METHODS HAVING HIGH TARGET AND LOW NON-TARGET ACTIVITY
(71) Tyratech, Inc., 1901 South Harbor City Boulevard, Suite 400, Melbourne, FL 32901, US
(72) ENAN, Essam, 1226 Impala Place, Davis, CA 95616, US
(74) Høiberg A/S, St. Kongensgade 59 A, DK-1264 Copenhagen K, DK

(51) (8) **EP 2322037**
A 01N 25/04
A 01G 13/02
A 01N 25/30
A 01N 25/34
A 01N 43/40
A 01N 47/40
A 01N 47/44
A 01N 51/00
A 01P 3/00
A 01P 7/04
(30) JP 11.09.2008. 2008233424
(86) PCT/JP2009004066 24.08.2009.
(96) EP 09812840.8 24.08.2009. Ja
(87) WO2010029691 18.03.2010. 201011
(97) EP 2322037 18.05.2011. 201120 En
(54) PESTICIDE COMPOSITION AND FRUIT BAG
(71) Nippon Soda Co., Ltd., 2-1, Ohtemachi 2-chome, Chiyoda-ku, Tokyo 100-8165, JP
(72) NISHIMURA, Kaoru, c/o Odawara Research Center, Haibara Field Research Center, Nippon Soda Co. Ltd., 62-1, Sakabe, Makinohara-shi, Shizuoka 421-0412, JP;
IWASA, Takao, c/o Nippon Soda Co. Ltd., 2-1, Ohtemachi 2-chome, Chiyoda-ku, Tokyo 100-8165, JP
(74) Wills, Andrew Jonathan, et al, Mewburn Ellis LLP, 33 Gutter Lane, London, EC2V 8AS, GB

(51) (8) **EP 2305029**
A 01N 25/10
A 01N 47/40
A 01P 7/02
A 01P 7/04
(30) JP 11.07.2008. 2008181653
(86) PCT/JP2009003154 07.07.2009.
(96) EP 09794178.5 07.07.2009. Ja
(87) WO2010004730 14.01.2010. 201002
(97) EP 2305029 06.04.2011. 201114 En
(54) METHOD FOR PRODUCING EXTENDED-RELEASE PREPARATION COMPOSITION
(71) Nippon Soda Co., Ltd., 2-1, Ohtemachi 2-chome, Chiyoda-ku, Tokyo 100-8165, JP
(72) ENDO, Yoshihisa, c/o Odawara Research Center, Haibara Field Research Center, Nippon Soda Co. Ltd., 62-1, Sakabe, Makinohara-shi, Shizuoka 421-0412, JP;
NAKAMURA, Yoshio, c/o Odawara Research Center, Haibara Field Research Center, Nippon Soda Co. Ltd., 62-1, Sakabe, Makinohara-shi, Shizuoka 421-0412, JP;
FUKUHARA, Shinya, c/o Nippon Soda Co. Ltd., Takaoka Plant, 300 Mukainohonmachi, Takaoka-shi, Toyama 933-8507, JP

(74) Cabinet Plasseraud, 52, rue de la Victoire, 75440 Paris Cedex 09, FR

(51) (8) **EP 2114144 ***
A 01N 27/00
A 01N 25/16
A 01N 25/22
A 01N 55/10
A 01P 7/02
A 01P 7/04
(30) EP 16.01.2007. 07447002
(86) PCT/EP2008050417 16.01.2008.
(96) EP 08707913.3 16.01.2008. En
(87) WO2008087148 24.07.2008. 200830
(97) EP 2114144 11.11.2009. 200946 En
(54) FOAMABLE COMPOSITION FOR KILLING ARTHROPODS AND USES THEREOF
(71) Oystershell NV, Booiebos 24, 9031 Drongen, BE
(72) ROSSEL, Bart, Peperstraat 40, 9636 Nederzwalm, BE
(74) Vanhalst, Koen, et al, De Clercq & Partners cvba, E. Gevaertdreef 10a, 9830 Sint-Martens-Latem, BE

(51) (8) **EP 2299810 ***
A 01N 31/00
A 61K 31/075
(30) US 05.06.2008. 131014
(86) PCT/US2009003367 03.06.2009.
(96) EP 09758748.9 03.06.2009. En
(87) WO2009148584 10.12.2009. 200950
(97) EP 2299810 30.03.2011. 201113 En
(54) TOPICAL PHARMACEUTICAL FORMULATIONS CONTAINING A LOW CONCENTRATION OF BENZOYL PEROXIDE IN SUSPENSION IN WATER AND A WATER-MISCIBLE ORGANIC SOLVENT
(71) Dow Pharmaceutical Sciences, Inc., 1330 Redwood Way, Petaluma, CA 94954-6542, US
(72) DOW, Gordon, J., 4189 Chaparral Court, Santa Rosa, CA 95409, US;
CHANG, Yunik, 21234 Via Colombard, Sonoma, CA 95476, US
(74) Gowshall, Jonathan Vallance, Forrester & Boehmert, Pettenkoferstrasse 20-22, 80336 München, DE

(51) (8) **EP 2135507**
A 01N 31/02
A 01N 37/36
A 01N 59/16
A 01P 3/00
A 61K 31/045
A 61K 31/191
A 61K 31/194
A 61K 31/315
A 61L 2/18
A 61P 31/02
(30) JP 09.03.2007. 2007059991
(86) PCT/JP2008053834 04.03.2008.
(96) EP 08721254.4 04.03.2008. Ja
(87) WO2008111429 18.09.2008. 200838
(97) EP 2135507 23.12.2009. 200952 En
(54) DISINFECTANT
(71) Maruishi Pharmaceutical Co., Ltd., 3-5 Fushimi-machi 2-chome, Chuo-ku, Osaka-shi, Osaka 541-0044, JP
(72) OKAMOTO, Kazuki, c/o Central Laboratory of MARUISHI, PHARMACEUTICALCO. LTD., 2-18 Imazunaka 2-chome, Tsurumi-ku, Osaka-shi, Osaka 538-0042, JP;
OKUNISHI, Junji, c/o Central Laboratory of MARUISHI, PHARMACEUTICALCO. LTD., 2-18 Imazunaka 2-chome, Tsurumi-ku, Osaka-shi, Osaka 538-0042, JP;
NISHIHARA, Yutaka, c/o Central Laboratory of MARUISHI, PHARMACEUTICALCO. LTD., 2-18 Imazunaka 2-chome, Tsurumi-ku, Osaka-shi, Osaka 538-0042, JP;
SETO, Masahiko, c/o Central Laboratory of MARUISHI, PHARMACEUTICALCO. LTD., 2-18 Imazunaka 2-chome, Tsurumi-ku, Osaka-shi, Osaka 538-0042, JP
(74) Witte, Weller & Partner, Phoenixbau, Königstrasse 5, 70173 Stuttgart, DE

(51) (8) **EP 2101570 ***
A 01N 33/02
A 61K 31/135
(30) US 14.12.2006. 875038 P
(86) PCT/US2007025516 13.12.2007.
(96) EP 07867741.6 13.12.2007. En
(87) WO2008076315 26.06.2008. 200826
(97) EP 2101570 23.09.2009. 200939 En
(54) TANNATE SALT OF RASAGILINE
(71) TEVA PHARMACEUTICAL INDUSTRIES, LTD., 5 Basel Street, P.O. Box 3190, 49131 Petach-Tikva, IL
(72) FRENKEL, Anton, Shlomo Ha-Meleh 2/20, 42268 Netanya, IL;
KOLTAI, Tamas, 4 Spiegelmann Street, 42758 Netanya, IL
(74) Nachshen, Neil Jacob, et al, D Young & Co LLP, 120 Holborn, London EC1N 2DY, GB

(51) (8) **EP 2296462 ***
A 01N 33/02
A 61K 31/135
(30) US 22.08.2008. 189724 P
US 13.06.2008. 131936 P
(86) PCT/US2009003528 12.06.2009.
(96) EP 09762921.6 12.06.2009. En
(87) WO2009151625 17.12.2009. 200951
(97) EP 2296462 23.03.2011. 201112 En
(54) RASAGILINE FOR PARKINSON'S DISEASE MODIFICATION
(71) Teva Pharmaceutical Industries Ltd., 5 Basel Street, P.O. Box 3190, 49131 Petah Tiqva, IL
(72) LEVY, Ruth, 25/2 Sasha Argov Street, Tel Aviv 69620, IL;
EYAL, Eli, Hahadas 12, Petach-Tikva 49321, IL;
GOREN, Tamar, 16 Haraz Street, Rehovot 76310, IL;
OREN, Sheila, Tel Hay 8, Herzliya 46301, IL;
SAYAG, Naim, Mobile Post Misgav, Yuvalim 20142, IL;
WEISS, Yonatan, 7 Hate'ena Street, Zichron Yaacov 30900, IL;
BEN-AMI, Miri, 24 Hadera Street, 49726 Petach-Tikva, IL
(74) Nachshen, Neil Jacob, et al, D Young & Co LLP, 120 Holborn, London EC1N 2DY, GB

(51) (8) **EP 2296463 ***
A 01N 35/02
A 01N 37/04
A 01N 59/00
A 01P 1/00
A 01N 35/04
A 01N 59/08
(30) EP 11.04.2008. 08154448
US 18.04.2008. 124637
EP 30.01.2009. 09151791
US 06.02.2009. 207005
(86) PCT/EP2009053903 01.04.2009.
(96) EP 09729373.2 01.04.2009. En
(87) WO2009124871 15.10.2009. 200942
(97) EP 2296463 23.03.2011. 201112 En
(54) COMPOSITION HAVING BIOCIDE ACTIVITY FOR AQUEOUS PREPARATIONS
(71) Omya Development AG, Baslerstrasse 42, 4665 Oftringen, CH
(72) DI MAIUTA, Nicola, Amselweg 8, CH-4528 Zuchwil, CH;
SCHWARZENTRUBER, Patrick, Regensbergstrasse 2, CH-8113 Boppelsen, CH;
BURI, Matthias, Mätteliweg 20, CH-4852 Rothrist, CH;
GANE, Patrick Arthur Charles, Studenweg 8, CH-4852 Rothrist, CH
(74) Glas, Holger, Maiwald Patentanwalts GmbH, Elisenhof, Elisenstrasse 3, 80335 München, DE

(51) (8) **EP 2259675 ***
A 01N 35/04
A 01N 43/653
(30) EP 22.02.2008. 08151802
(86) PCT/EP2009052087 20.02.2009.
(96) EP 09713218.7 20.02.2009. De
(87) WO2009103813 27.08.2009. 200935
(97) EP 2259675 15.12.2010. 201050 De
(54) FUNGICIDAL COMPOSITIONS COMPRISING 3'-BROMINE-2,3,4,6'-TETRAMETHOXY-2'-6-DIMETHYLBENZOPHENONE
(71) BASF SE, 67056 Ludwigshafen, DE
(72) GEWEHR, Markus, Goethestrasse 21, 56288 Kastellaun, DE;
BRUNS, Jens, Albert-Schweitzer 12, 67435 Neustadt, DE;
SCHERER, Maria, Hermann-Jürgens-Strasse 30, 76829 Landau, DE;
HADEN, Egon, Bayernstrasse 55, 67061 Ludwigshafen, DE

(51) (8) **EP 2111105 ***
A 01N 37/18
A 61K 38/00
A 61K 31/785
A 61K 31/198
A 61K 38/16
A 61P 25/28
(30) US 28.11.2007. 4710
US 03.12.2007. 5271
US 11.12.2007. 7141
US 17.09.2008. 192455
(86) PCT/US2008013146 26.11.2008.
(96) EP 08853455.7 26.11.2008. En
(87) WO2009070298 04.06.2009. 200923
(97) EP 2111105 28.10.2009. 200944 En
(54) METHOD OF DELAYING THE ONSET OF CLINICALLY DEFINITE MULTIPLE SCLEROSIS
(71) Yeda Research and Development Co., Ltd., P.O.Box 95, 76100 Rehovot, IL
(72) STARK, Yafit, Uziel 22, Giv'at Shmu'el 54017, IL;
LADKANI, David, Guatemala 29, Jerusalem 96705, IL
(74) Nachshen, Neil Jacob, D Young & Co LLP, 120 Holborn, London EC1N 2DY, GB

(51) (8) **EP 2299812 ***
A 01N 37/18
(30) US 27.05.2008. 128970 P
US 29.05.2008. 57042 P
(86) PCT/US2009045156 26.05.2009.
(96) EP 09755663.3 26.05.2009. En
(87) WO2009146301 03.12.2009. 200949
(97) EP 2299812 30.03.2011. 201113 En
(54) TARGETING TGF- AS A THERAPY FOR ALZHEIMER'S DISEASE
(71) Yale University, Two Whitney Avenue, New Haven, CT 06511, US
(72) FLAVELL, Richard, A., 283 Moose Hill Road, Guilford, CT 06437, US;
TOWN, Terrence, C., 10301 Chrysanthemum Lane, Bel-Air, CA 90077, US
(74) Grünecker, Kinkeldey, Stockmair & Schwanhäusser, Anwaltssozietät, Leopoldstrasse 4, 80802 München, DE

(51) (8) **EP 2309852 ***
A 01N 37/18
A 61K 31/16
(30) WO 30.07.2008. PCT/GB2008/139297
(86) PCT/US2009052039 29.07.2009.
(96) EP 09803517.3 29.07.2009. En
(87) WO2010014661 04.02.2010. 201005
(97) EP 2309852 20.04.2011. 201116 En
(54) NOVEL METHOD
(71) GlaxoSmithKline LLC, One Franklin Plaza, 200 North 16th Street, Philadelphia, PA 19102, US
(72) CLARKE, Geoffrey Duke, Edward, 1500 Littleton Road, Parsippany, NJ 07054, US;
GRATTAN, Timothy, James, C/o Glaxosmithkline, St. George's Avenue, Weybridge, Surrey KT13 0DE, GB;
BURNETT, Ian, C/o Glaxosmithkline, St. George's Avenue, Weybridge, Surrey KT13 0DE, GB
(74) Morris, Miriam Elizabeth, et al, GlaxoSmithKline, Corporate Intellectual Property, (CN9.25.1), 980 Great West Road, Brentford, Middlesex TW8 9GS, GB

(51) (8) **EP 2317845 ***
A 01N 37/18
(30) US 18.07.2008. 82062 P
US 14.11.2008. 114673 P
(86) PCT/US2009050953 17.07.2009.
(96) EP 09798793.7 17.07.2009. En
(87) WO2010009374 21.01.2010. 201003
(97) EP 2317845 11.05.2011. 201119 En
(54) METHODS OF TREATING AN OVERWEIGHT OR OBESE SUBJECT
(71) Zafgen, Inc., 5 Cambridge Center Floor 2, Cambridge, MA 02142, US
(72) VATH, James, 3 Green Meadow Drive, Lynnfield, MA 01940, US

(74) Harris, Jennifer Lucy, et al, Kilburn & Strode LLP, 20 Red Lion Street, London WC1R 4PJ, GB

(51) (8) **EP 2101575** *
A 01N 43/00
A 61K 31/33
A 61K 31/00
A 61K 31/352
A 61K 31/366
A 61P 9/00
A 61P 9/12
A 61P 11/00
A 61P 13/12
(30) US 22.11.2006. 860894 P
(86) PCT/US2007024345 21.11.2007.
(96) EP 07867561.8 21.11.2007. En
(87) WO2008066770 05.06.2008. 200823
(97) EP 2101575 23.09.2009. 200939 En
(54) ACE2 ACTIVATOR COMPOUNDS AND METHODS OF USE THEREOF
(71) University of Florida Research Foundation, Inc., P.O. Box 115500, Gainesville, Florida 32611-5500, US
(72) OSTROV, David A., 401 SW 43rd Terrace, Gainesville, FL 32607, US;
RAIZADA, Mohan K., 247 Turkey Creek, Alachua, FL 32615, US;
HERNANDEZ, Jose A., 2930 SW 23rd Terrace, Gainesville, FL 32608, US
(74) Adam, Holger, Kraus & Weisert, Patent- und Rechtsanwälte, Thomas-Wimmer-Ring 15, 80539 München, DE

(51) (8) **EP 2114153** *
A 01N 43/04
A 01N 63/00
A 01N 65/00
A 61K 31/70
A 61K 48/00
A 61K 39/00
(30) US 06.02.2007. 900138 P
(86) PCT/US2008052953 04.02.2008.
(96) EP 08728962.5 04.02.2008. En
(87) WO2008097927 14.08.2008. 200833
(97) EP 2114153 11.11.2009. 200946 En
(54) TREATMENT AND PREVENTION OF NEURODEGENERATIVE DISEASES USING GENE THERAPY
(71) Yoo, Tai June, 7328 Cotton Plant Cove, Memphis, Tennessee 38119, US
(72) Yoo, Tai June, 7328 Cotton Plant Cove, Memphis, Tennessee 38119, US
(74) Zimmermann & Partner, Postfach 330 920, 80069 München, DE

(51) (8) **EP 2299821** *
A 01N 43/42
(30) US 10.06.2008. 131599 P
US 10.06.2008. 131602 P
US 26.08.2008. 190159 P
US 05.12.2008. 201064 P
(86) PCT/US2009046714 09.06.2009.
(96) EP 09763424.0 09.06.2009. En
(87) WO2009152133 17.12.2009. 200951
(97) EP 2299821 30.03.2011. 201113 En
(54) NOVEL TRICYCLIC COMPOUNDS
(71) Abbott Laboratories, 100 Abbott Park Road, Abbott Park, Illinois 60064, US
(72) WISHART, Neil, 406 Sterling Road, Jefferson, MA 01522, US;
ARGIRIADI, Maria, A., 273 Main Street, Wayland, MA 01778, US;
CALDERWOOD, David, J., 4 McCarthy Circle, Framingham, MA 01702, US;
ERICSSON, Anna, M., 16 Venus Drive, Shrewsbury, MA 01545, US;
FIAMENGO, Bryan, A., 1029 Pleasant Street Apt., Worcester, MA 01602, US;
FRANK, Kristine, E., 8 Pinewood Lane, Worcester, MA 01609, US;
FRIEDMAN, Michael, 27 Mechanic Street, Newton, MA 02464, US;
GEORGE, Dawn, M., 9 Pond Lane, Charlton, MA 01507, US;
GOEDKEN, Eric, R., 105 Hillcroft Avenue, Worcester, MA 01606, US;
JOSEPHSOHN, Nathan, S., 217 West Springfield 4, Boston, MA 02118, US;
LI, Biqin, C., 10 Kendall Drive, Northborough, MA 01532, US;
MORYTKO, Michael, J., 1296 Worcester Road 2510, Framingham, MA 01701, US;
STEWART, Kent, D., 4715 Kings Way N., Gurnee, IL 60031, US;
VOSS, Jeffrey, W., 257 Shrewsbury Street, Holden, MA 01520, US;
WALLACE, Grier, A., 204 Chace Hill Road, Sterling, MA 01564, US;
WANG, Lu, 14 Stratton Way, Northborough, MA 01532, US;
WOLLER, Kevin, R., 1072 Joy Court, Anitoch, IL 60002, US
(74) Modiano, Micaela Nadia, et al, Modiano & Partners, Thierschstrasse 11, 80538 München, DE

(51) (8) **WO 2010021404**
A 01N 43/50
A 01N 25/22
(30) JP 19.08.2008. 2008211054
(86) PCT/JP2009064811 19.08.2009.
(96) WO 09788041.3 19.08.2009. En
(87) WO2010021404 25.02.2010. 201008
(97) WO 2010021404 25.02.2010. 201008 En
(54) METHOD FOR CONTROLLING DEGRADATION OF AGRICULTURAL CHEMICAL ACTIVE INGREDIENT
(71) ISHIHARA SANGYO KAISHA, LTD., 3-15, Edobori 1-chome, Nishi-ku, Osaka-shi, Osaka 550-0002, JP
(72) SHINDO, Takeshi, c/o Ishihara Sangyo Kaisha, Ltd., Chuo Kenkyusho, 3-1, Nishi-Shibukawa 2-chome, Kusatsu-shi, Shiga 525-0025, JP;
OHNO, Hiromi, c/o Ishihara Sangyo Kaisha, Ltd., Chuo Kenkyusho, 3-1, Nishi-Shibukawa 2-chome, Kusatsu-shi, Shiga 525-0025, JP;
ISHIBASHI, Yutaka, c/o Ishihara Sangyo Kaisha, Ltd., Chuo Kenkyusho, 3-1, Nishi-Shibukawa 2-chome, Kusatsu-shi, Shiga 525-0025, JP
(74) HOFFMANN EITLE, Patent- und Rechtsanwälte, Arabellastraße 4, 81925 München, DE

(51) (8) **EP 2124563** *
A 01N 43/50
A 61K 31/415
C 07D 235/06
C 07D 235/14
C 07D 235/26
C 07D 235/12
C 07D 235/30
C 07D 401/12
C 07D 405/12
A 61P 29/00
(30) US 15.12.2006. 870212 P
(86) PCT/US2007087228 12.12.2007.
(96) EP 07865574.3 12.12.2007. En
(87) WO2008076752 26.06.2008. 200826
(97) EP 2124563 02.12.2009. 200949 En
(54) BENZIMIDAZOLE TRPV1 INHIBITORS
(71) Janssen Pharmaceutica, N.V., Turnhoutseweg 30, 2340 Beerse, BE
(72) CHEUNG, Wing S., 7-14 Quail Ridge Drive, Plainsboro, New Jersey 08536, US;
PARKS, Daniel J., 26 Berkley Drive, Downingtown, Pennsylvania 19335, US;
PARSONS, William H., 29 Grayson Drive, Belle Mead, New Jersey 08502, US;
PATEL, Sharmila, 2267 Sunrise Way, Jamison, Pennsylvania 18929, US;
PLAYER, Mark R., 80 Page Lane, Phoenixville, Pennsylvania 19460, US
(74) Warner, James Alexander, et al, Carpmaels & Ransford, One Southampton Row, London, WC1B 5HA, GB

(51) (8) **EP 2320733** *
A 01N 43/50
A 01N 25/22
(30) JP 19.08.2008. 2008211054
(86) PCT/JP2009064811 19.08.2009.
(96) EP 09788041.3 19.08.2009. En
(87) WO2010021404 25.02.2010. 201008
(97) EP 2320733 18.05.2011. 201120 En
(54) METHOD FOR CONTROLLING DEGRADATION OF AGRICULTURAL CHEMICAL ACTIVE INGREDIENT
(71) ISHIHARA SANGYO KAISHA, LTD., 3-15, Edobori 1-chome, Nishi-ku, Osaka-shi, Osaka 550-0002, JP
(72) SHINDO, Takeshi, c/o Ishihara Sangyo Kaisha, Ltd., Chuo Kenkyusho, 3-1, Nishi-Shibukawa 2-chome, Kusatsu-shi, Shiga 525-0025, JP;
OHNO, Hiromi, c/o Ishihara Sangyo Kaisha, Ltd., Chuo Kenkyusho, 3-1, Nishi-Shibukawa 2-chome, Kusatsu-shi, Shiga 525-0025, JP;
ISHIBASHI, Yutaka, c/o Ishihara Sangyo Kaisha, Ltd., Chuo Kenkyusho, 3-1, Nishi-Shibukawa 2-chome, Kusatsu-shi, Shiga 525-0025, JP
(74) HOFFMANN EITLE, Patent- und Rechtsanwälte, Arabellastraße 4, 81925 München, DE

(51) (8) **EP 2312951** *
A 01N 43/52
(30) US 10.07.2008. 170571
(86) PCT/US2009049901 08.07.2009.
(96) EP 09795102.4 08.07.2009. En
(87) WO2010006025 14.01.2010. 201002
(97) EP 2312951 27.04.2011. 201117 En
(54) BICYCLIC COMPOUNDS HAVING ANTIMITOTIC AND/OR ANTITUMOR ACTIVITY AND METHODS OF USE THEREOF
(71) Duquesne University of The Holy Spirit, 600 Forbes Avenue, Pittsburgh, PA 15282, US
(72) GANGJEE, Aleem, 3855 Oakbrook Court, Allison Park, PA 15101, US
(74) Grünecker, Kinkeldey, Stockmair & Schwanhäusser, Anwaltssozietät, Leopoldstrasse 4, 80802 München, DE

(51) (8) **EP 2193714**
A 01N 43/56
(30) EP 25.04.2007. 07008370
(96) EP 10157572.8 23.04.2008. En
(97) EP 2193714 09.06.2010. 201023 En
(54) Fungicidal Compositions
(71) Syngenta Participations AG., Schwarzwaldallee 215, 4058 Basel, CH
(72) Tobler, Hans, Birsigstrasse 129, 4054, Basel, CH;
Walter, Harald, Syngenta Crop Protection Münchwilen AG, Schaffhau, 4332, Stein, CH;
Haas, Ulrich Johannes, Syngenta Crop Protection Münchwilen AG, Schaffhau, 4332, Stein, CH
(74) Hölscher, Ingo, Syngenta Crop Protection Münchwilen AG, Intellectual Property, Werk Stein, Schaffhauserstrasse, 4332 Stein, CH

(51) (8) **EP 2193715**
A 01N 43/56
(30) EP 25.04.2007. 07008370
(96) EP 10157577.7 23.04.2008. En
(97) EP 2193715 09.06.2010. 201023 En
(54) Fungicidal Compositions
(71) Syngenta Participations AG., Schwarzwaldallee 215, 4058 Basel, CH
(72) Tobler, Hans, Birsigstrasse 129, 4054, Basel, CH;
Walter, Harald, Syngenta Crop Protection Münchwilen AG, Schaffhau, 4332, Stein, CH;
Haas, Ulrich Johannes, Syngenta Crop Protection Münchwilen AG, Schaffhau, 4332, Stein, CH
(74) Hölscher, Ingo, et al, Syngenta Crop Protection Münchwilen AG, Intellectual Property, Werk Stein, Schaffhauserstrasse, 4332 Stein, CH

(51) (8) **EP 2196088**
A 01N 43/56
(30) EP 25.04.2007. 07008370
(96) EP 10157576.9 23.04.2008. En
(97) EP 2196088 16.06.2010. 201024 En
(54) Fungicidal Compositions
(71) Syngenta Participations AG, Schwarzwaldallee 215, 4058 Basel, CH
(72) Tobler, Hans, Birsigstrasse 129, 4054, Basel, CH;
Walter, Harald, Syngenta Crop Protection Münchwilen AG, Schaffhau, 4332, Stein, CH;
Haas, Ulrich Johannes, Syngenta Crop Protection Münchwilen AG, Schaffhau, 4332, Stein, CH
(74) Hölscher, Ingo, Syngenta Crop Protection Münchwilen AG, Intellectual Property, Werk Stein, Schaffhauserstrasse, 4332 Stein, CH

(51) (8) **EP 2201839**
A 01N 43/56
(30) EP 25.04.2007. 07008370
(96) EP 10157590.0 23.04.2008. En
(97) EP 2201839 30.06.2010. 201026 En
(54) Fungicidal compositions
(71) Syngenta Participations AG, Schwarzwaldallee 215, 4058 Basel, CH
(72) Tobler, Hans, Birsigstrasse 129, 4054, Basel, CH;
Walter, Harald, Syngenta Crop Protection Münchwilen AG, Schaffhau, 4332, Stein, CH;
Haas, Ulrich Johannes, Syngenta Crop Protection Münchwilen AG, Schaffhau, 4332, Stein, CH
(74) Hölscher, Ingo, Syngenta Crop Protection Münchwilen AG, Intellectual Property, Werk Stein, Schaffhauserstrasse, 4332 Stein, CH

(51) (8) **EP 2204093**
A 01N 43/56
(30) EP 25.04.2007. 07008370
(96) EP 10157584.3 23.04.2008. En
(97) EP 2204093 07.07.2010. 201027 En
(54) Fungicidal Compositions
(71) Syngenta Participations AG., Schwarzwaldallee 215, 4058 Basel, CH
(72) Tobler, Hans, Birsigstrasse 129, 4054, Basel, CH;
Walter, Harald, Syngenta Crop Protection Münchwilen AG, Schaffhau, 4332, Stein, CH;
Haas, Ulrich Johannes, Syngenta Crop Protection Münchwilen AG, Schaffhau, 4332, Stein, CH
(74) Hölscher, Ingo, Syngenta Crop Protection Münchwilen AG, Intellectual Property, Werk Stein, Schaffhauserstrasse, 4332 Stein, CH

(51) (8) **EP 2240027** *
A 01N 43/56
A 01P 3/00
A 01P 7/04
A 01N 37/38
A 01N 37/46
A 01N 37/50
A 01N 43/36
A 01N 43/54
A 01N 43/653
A 01N 47/02
A 01N 47/24
A 01N 47/26
A 01N 47/34
A 01N 47/38
(30) WO 05.02.2008. PCT/EP2008/051375
EP 01.08.2008. 08161623
(86) PCT/EP2009051255 04.02.2009.
(96) EP 09707307.6 04.02.2009. En
(87) WO2009098223 13.08.2009. 200933
(97) EP 2240027 20.10.2010. 201042 En
(54) PLANT HEALTH COMPOSITION
(71) BASF SE, 67056 Ludwigshafen, DE
(72) WILHELM, Ronald, Platanenweg 11, 65719 Hofheim, DE;
PRADE, Alexander Guttenkunst, Rua Tomé de Sousa 181, apto 52, 09851-550 Sao Bernardo Do Campo - SP, BR;
MERK, Michael, Via Monte Grappa 9a, 20020 Arese, IT;
BEGLIOMINI, Edson, Rua Palestina, 531/22, Sao Paulo, SP 04362-030, BR;
ECCO, Marlon, Elenita de Castro Cardoso Street, 747 - ap. 202, Rondonopolis, Mato Grosso 78740-205, BR;
TAVARES-RODRIGUES, Marco-Antonio, Lino de Almeida Pires, 282 apto 51, 04317-180 Jabaquara - Sao Paulo - SP, BR;
VOESTE, Dirk, Berliner Platz 11, 67117 Limburgerhof, DE

(51) (8) **EP 2242366** *
A 01N 43/56
A 01P 3/00
A 01P 7/04
A 01N 35/04
A 01N 37/20
A 01N 37/24
A 01N 37/36
A 01N 37/38
A 01N 37/46
A 01N 37/50
A 01N 37/52
A 01N 41/06
A 01N 43/30
A 01N 43/32
A 01N 43/36
(30) WO 05.02.2008. PCT/EP2008/051375
EP 01.08.2008. 08161625
(86) PCT/EP2009051241 04.02.2009.
(96) EP 09709231.6 04.02.2009. En
(87) WO2009098218 13.08.2009. 200933
(97) EP 2242366 27.10.2010. 201043 En
(54) PLANT HEALTH COMPOSITION
(71) BASF SE, 67056 Ludwigshafen, DE
(72) WILHELM, Ronald, Platanenweg 11, 65719 Hofheim, DE;
PRADE, Alexander, Guttenkunst, Rua Tomé de Sousa 181, apto 52, CEP-09851-550 Sao Bernardo do Campo, SP, BR;
MERK, Michael, Via Monte Grappa 9a, 20020 Arese, IT;
GLADWIN, Robert, John, 6 Cheltenham Close, SK10 2WD Macclesfield, GB;
BRAHM, Lutz, Am Hang 16, 67551 Worms, DE;
TAVARES-RODRIGUES, Marco-Antonio, Lino de Almeida Pires, 282 apto 51, CEP-04317-180 Jabaquara, SP, BR;
VOESTE, Dirk, Berliner Platz 11, 67117 Limburgerhof, DE

(51) (8) **EP 2306831** *
A 01N 43/56
A 01N 25/30
A 01P 7/04
A 01P 7/02
A 01P 5/00
A 01P 9/00
(30) JP 24.07.2008. 2008191341
(86) PCT/JP2009063300 17.07.2009.
(96) EP 09787999.3 17.07.2009. En
(87) WO2010010958 28.01.2010. 201004
(97) EP 2306831 13.04.2011. 201115 En
(54) PESTICIDAL COMPOSITION
(71) ISHIHARA SANGYO KAISHA, LTD., 3-15, Edobori 1-chome, Nishi-ku, Osaka-shi, Osaka 550-0002, JP
(72) HAMAMOTO, Taku, c/o Ishihara Sangyo Kaisha Ltd., Chuo Kenkyusho, 3-1 Nishi-shibukawa 2-chome, Kusatsu-shi, Shiga 525-0025, JP

(74) Hartz, Nikolai, Wächtershäuser & Hartz, Patentanwaltspartnerschaft, Weinstrasse 8, 80333 München, DE

(51) (8) **EP 2306833 ***
A 01N 43/56
A 01P 3/00
A 01N 37/34
A 01N 37/36
A 01N 43/36
A 01N 43/54
A 01N 43/653
(30) GB 01.07.2008. 0812028
(86) PCT/EP2009057465 16.06.2009.
(96) EP 09772312.6 16.06.2009. En
(87) WO2010000612 07.01.2010. 201001
(97) EP 2306833 13.04.2011. 201115 En
(54) FUNGICIDAL COMPOSITIONS
(71) Syngenta Participations AG, Schwarzwaldallee 215, 4058 Basel, CH
(72) HAAS, Ulrich Johannes, Syngenta Crop Protection Münchwilen AG, Schaffhauserstrasse, CH-4332 Stein, CH; WALTER, Harald, Syngenta Crop Protection Münchwilen AG, Schaffhauserstrasse, CH-4332 Stein, CH; STIERLI, Daniel, Syngenta Crop Protection Münchwilen AG, Schaffhauserstrasse, CH-4332 Stein, CH
(74) Hölscher, Ingo, Syngenta Crop Protection Münchwilen AG, Intellectual Property, Werk Stein, Schaffhauserstrasse, 4332 Stein, CH

(51) (8) **EP 2306834 ***
A 01N 43/56
A 01P 3/00
A 01N 31/14
A 01N 37/02
A 01N 37/28
A 01N 37/38
A 01N 37/40
A 01N 37/42
A 01N 37/44
A 01N 41/02
A 01N 41/10
A 01N 43/08
A 01N 43/22
A 01N 43/24
A 01N 43/28
(30) EP 04.07.2008. 08159723
(86) PCT/EP2009058298 02.07.2009.
(96) EP 09772490.0 02.07.2009. En
(87) WO2010000790 07.01.2010. 201001
(97) EP 2306834 13.04.2011. 201115 En
(54) FUNGICIDAL MIXTURES COMPRISING SUBSTITUTED 1-METHYLPYRAZOL-4-YLCARBOXANILIDES
(71) BASF SE, 67056 Ludwigshafen, DE
(72) GEWEHR, Markus, Goethestr. 21, 56288 Kastellaun, DE; GROEGER, Ulf, Rietburgstr.4, 67141 Neuhofen, DE; HADEN, Egon, Bayernstrasse 55, 67061 Ludwigshafen, DE; VONEND, Michael, Wasserhohl 43, 67098 Bad Dürkheim, DE

(51) (8) **EP 2120579 ***
A 01N 43/58
A 61K 31/50
A 61K 31/495
C 07D 237/32
C 07D 403/10
C 07D 403/12
C 07D 403/14
(30) US 28.12.2006. 882317 P
(86) PCT/US2007088319 20.12.2007.
(96) EP 07869628.3 20.12.2007. En
(87) WO2008083027 10.07.2008. 200828
(97) EP 2120579 25.11.2009. 200948 En
(54) INHIBITORS OF POLY(ADP-RIBOSE)POLYMERASE
(71) ABBOTT LABORATORIES, D-377 AP6A-1, 100 Abbott Park Road, Abbott Park, IL 60064-6008, US
(72) GANDHI, Viraj B., 5335 Mahogany Court, Gurnee, Illinois 60031, US; GIRANDA, Vincent L., 272 South Fork Drive, Gurnee, Illinois 60031, US; GONG, Jianchun, 130 Ferndale Road, Deerfield, Illinois 60015, US; PENNING, Thomas D., 321 Highview, Elmhurst, Illinois 60126, US; ZHU, Gui-dong, 1395 Almaden Lane, Gurnee, Illinois 60031, US
(74) Modiano, Micaela Nadia, et al, Modiano Josif Pisanty & Staub Ltd, Thierschstrasse 11, 80538 München, DE

(51) (8) **EP 2315521 ***
A 01N 43/58
(30) US 12.06.2008. 61039 P
US 13.11.2008. 114416 P
US 13.11.2008. 114425 P
(86) PCT/US2009047033 11.06.2009.
(96) EP 09763614.6 11.06.2009. En
(87) WO2009152325 17.12.2009. 200951
(97) EP 2315521 04.05.2011. 201118 En
(54) DIAMINO-PYRIDINE, PYRIMIDINE, AND PYRIDAZINE MODULATORS OF THE HISTAMINE H 4 RECEPTOR
(71) Janssen Pharmaceutica NV, Turnhoutseweg 30, 2340 Beerse, BE
(72) CAI, Hui, 11213 Corte Belleza, San Diego, CA 92130, US; CHAVEZ, Frank, 1111 San Clemente Way, Camarillo, CA 93010, US; DUNFORD, Paul, J., 425 South Rios Avenue, Solana Beach, CA 92075, US; GREENSPAN, Andrew, J., 5230 Fiore Terrace, Apt 107, San Diego, CA 92122, US; MEDUNA, Steven, P., 9975 Paseo Montril, San Diego, CA 92129, US; QUIROZ, Jorge, A., 125 Spruce Street, Princeton, NJ 08542, US; SAVALL, Brad, M., 9512 Ronda Avenue, San Diego, CA 92123, US; TAYS, Kevin, L., 1435 Big Canyon Terrace, Cardiff By The Sea, CA 92007, US; THURMOND, Robin, L., 1465 Guizot Street, San Diego, CA 92107, US; WEI, Jianmei, 12516 Senda Panacea, San Diego, CA 92129, US;

WOLIN, Ronald, L., 16309 Los Rosales Street, San Diego, CA 92127, US;
ZHANG, Xiaohu, Building E, No. 29, Life Science Park Road, Bejing, Changping District 102206, CN
(74) Carpmaels & Ransford, One Southampton Row, London, WC1B 5HA, GB

(51) (8) **EP 2317852** *
A 01N 43/62
A 61K 31/55
(30) US 16.07.2008. 81052
(86) PCT/US2009050835 16.07.2009.
(96) EP 09798745.7 16.07.2009. En
(87) WO2010009309 21.01.2010. 201003
(97) EP 2317852 11.05.2011. 201119 En
(54) PHARMACEUTICAL FORMULATIONS CONTAINING DOPAMINE RECEPTOR LIGANDS
(71) Forest Laboratories Holdings Limited, 18 Parliament Street, Milner House, Hamilton HM12, BM;
Richter Gedeon Nyrt., Gyömr i út 19-21., 1103 Budapest, HU
(72) SARKAR, Ranajoy, 900 Davidson Raod, Piscataway, NJ 08854, US;
DEDHIYA, Mahendra, G., 1 Lea Court, Pomona, NY 10970, US;
CHETTRY, Anil, 11 Hickory Hill Drive, Holtsville, NY 11742, US
(74) HOFFMANN EITLE, Patent- und Rechtsanwälte, Arabellastraße 4, 81925 München, DE

(51) (8) **EP 2296475** *
A 01N 43/64
A 61K 31/41
(30) US 20.06.2008. 74510
(86) PCT/US2009048041 19.06.2009.
(96) EP 09767873.4 19.06.2009. En
(87) WO2009155565 23.12.2009. 200952
(97) EP 2296475 23.03.2011. 201112 En
(54) TRIAZOLOPYRIDINE JAK INHIBITOR COMPOUNDS AND METHODS
(71) Genentech, Inc., One DNA Way, South San Francisco, CA 94080-4990, US
(72) ZHU, Bing-yan, 135 Lois Lane, Palo Alto, CA 94303, US;
SIU, Michael, 454 Chatham Road, Burlingame, CA 94010, US;
MAGNUSON, Steven, R., 3288 S. Bridgepointe Lane, Dublin, CA 94568, US;
PASTOR, Richard, 243 Waller Street, San Francisco, CA 94102, US;
HAIYING, He, Anling Lu 458 Long, 20 Hao 102 Shi, Qu, Shanghai 200240, CN;
YISONG, Xiao, Guoshun Lu 80 Long, 20 Hao 203 Shi, Yangpu Qu, Shanghai 200433, CN;
JIFU, Zheng, Guangming Lu 221 Long, 3 Hao 102 Shi, Pu Dong Qu, Shanghai 200131, CN;
XING, Xu, Jiyang Lu 757 Long, 67 Hao 502 Shi, Pu Dong Qu, Shanghai 200120, CN;
JUNPING, Zhao, Yu Ying Middle School Of Yan'an City, Yan'an, Shanxi 716000, CN;
LIU, Wendy, 343 Catamaran Street, Foster City, CA 94404, US
(74) Bailey, Sam Rogerson, Mewburn Ellis LLP, 33 Gutter Lane, London, EC2V 8AS, GB

(51) (8) **EP 2320738** *
A 01N 43/78
A 61K 31/425
(30) US 29.08.2008. 92844 P
(86) PCT/US2009054920 25.08.2009.
(96) EP 09810508.3 25.08.2009. En
(87) WO2010025142 04.03.2010. 201009
(97) EP 2320738 18.05.2011. 201120 En
(54) SUBSTITUTED AMINOTHIAZOLE DERIVATIVES, PHARMACEUTICAL COMPOSITIONS, AND METHODS OF USE
(71) TransTech Pharma, Inc., 4170 Mendenhall Oaks Parkway, High Point, NC 27265, US
(72) MJALLI, Adnan, M., M., 6421 Ashton Park Drive, Oak Ridge, NC 27310, US;
GADDAM, Bapu, 3749 Single Leaf Circle, High Point, NC 27265, US;
ANDREWS, Robert, C., 3312 Morris Farm Road, Jamestown, NC 27282, US;
VICTORY, Samuel, 5820 Elkton Drive, Oak Ridge, NC 27310, US;
GUPTA, Suparna, 2518 Brandt Forest Court, Greensboro, NC 27455, US
(74) Russell, Lindsey, et al, Elkington and Fife LLP, Thavies Inn House, 3-4 Holborn Circus, London EC1N 2HA, GB

(51) (8) **EP 2303022** *
A 01N 43/80
A 01N 37/20
A 01P 13/00
(30) DK 09.05.2008. 200800667
(86) PCT/DK2009000105 07.05.2009.
(96) EP 09741765.3 07.05.2009. En
(87) WO2009135492 12.11.2009. 200946
(97) EP 2303022 06.04.2011. 201114 En
(54) SYNERGISTIC HERBICIDAL COMBINATION OF CLOMAZONE AND PETHOXAMID
(71) Cheminova A/S, P.O. Box 9, 7620 Lemvig, DK
(72) REFARDT, Matthias, Amselfelsweg 19, 4107 Ettingen, CH;
CHRISTENSEN, Casper, Reinhard, Bakken 8, 7500 Holstebro, DK
(74) Rasmussen, Torben Ravn, et al, Awapatent A/S, Rigensgade 11, 1316 Copenhagen K, DK

(51) (8) **EP 2225940**
A 01N 47/40
A 01N 51/00
A 01N 43/40
A 01N 25/00
A 01N 25/04
A 01N 25/30
A 01P 7/04
(96) EP 09003183.2 05.03.2009. En
(97) EP 2225940 08.09.2010. 201036 En
(54) Oil dispersions of nAChR binding neonicotinoids
(71) GAT Microencapsulation AG, Gewerbezone 1, 2490 Ebenfurth, AT
(72) Casaña Giner, Victor, Gewerbezone 1, 2490 Ebenfurth, AT;
Gimeno Sierra, Miguel, Gewerbezone 1, 2490 Ebenfurth, AT;
Gimeno Sierra, Bárbara, Gewerbezone 1, 2490 Ebenfurth, AT

(74) Soler Lerma, Santiago, C/ Poeta Querol No. 1-10a, 46002 Valencia, ES

(51) (8) **EP 2309863 ***
A 01N 59/16
A 01N 59/00
A 01N 25/22
A 01N 25/02
A 01P 1/00
(30) EP 11.07.2008. 08104720
(86) PCT/CH2009000234 03.07.2009.
(96) EP 09775734.8 03.07.2009. En
(87) WO2010003263 14.01.2010. 201002
(97) EP 2309863 20.04.2011. 201116 En
(54) CONCENTRATE FOR PREPARING A DISINFECTANT AND METHODS FOR ITS PREPARATION AND USE
(71) Sanosil AG, Eichtalstrasse 49, 8634 Hombrechtikon, CH
(72) GÖMÖRI, Janos, Bahnhofstrasse 12, 8712 Stäfa, CH
(74) Detken, Andreas, et al, Isler & Pedrazzini AG, Gotthardstrasse 53, Postfach 1772, 8027 Zürich, CH

(51) (8) **EP 2296480 ***
A 01P 13/00
A 01N 43/10
A 01N 43/40
A 01N 43/56
A 01N 43/78
A 01N 43/82
A 01N 57/14
A 01N 37/22
A 01N 37/24
A 01N 37/26
(30) EP 18.06.2008. 08158498
(86) PCT/EP2009057412 16.06.2009.
(96) EP 09765827.2 16.06.2009. En
(87) WO2009153247 23.12.2009. 200952
(97) EP 2296480 23.03.2011. 201112 En
(54) HERBICIDAL COMPOSITIONS COMPRISING 4-AMINO-3,6-DICHLOROPYRIDINE-2-CARBOXYLIC ACID
(71) BASF SE, 67056 Ludwigshafen, DE
(72) GRIVEAU, Yannick, Otto-Hess-Str. 27, 67346 Speyer, DE; BREMER, Hagen, Limburgstrasse 18, 67354 Römerberg, DE; PFENNING, Matthias, Raiffeisenstr. 6, 67365 Schwegenheim, DE

(51) (8) **EP 2117329 ***
A 23C 9/13
A 23C 9/127
A 23C 9/15
A 23L 1/20
(30) FI 11.12.2006. 20065791
(86) PCT/FI2007050671 10.12.2007.
(96) EP 07848202.3 10.12.2007. En
(87) WO2008071841 19.06.2008. 200825
(97) EP 2117329 18.11.2009. 200947 En
(54) METHOD FOR MODIFYING STRUCTURE OF LOW-ENERGY PRODUCT
(71) Valio Ltd., Meijeritie 6, 00370 Helsinki, FI
(72) MYLLÄRINEN, Päivi, Suomenlinna B 17 as 5, 00190 Helsinki, FI;
RAJAKARI, Kirsi, Punatulkuntie 4, 2, 02660 Espoo, FI;
MANNER, Liisa, Viestitie 39, 01280 Vantaa, FI
(74) Tiiro, Pirta Marja Kristiina, Kolster OY AB, Iso Roobertinkatu 23, P.O.Box 148, 00121 Helsinki, FI

(51) (8) **EP 2293680 ***
A 23C 19/045
A 23C 19/09
(30) DE 23.05.2008. 202008007416 U
EP 05.06.2008. 08010259
(86) PCT/EP2009056223 22.05.2009.
(96) EP 09749915.6 22.05.2009. De
(87) WO2009141425 26.11.2009. 200948
(97) EP 2293680 16.03.2011. 201111 De
(54) FOOD WITH CHEESE CONTAINED THEREIN
(71) Zott GmbH & Co. KG, Dr.-Steichele Strasse 4, 86690 Mertingen, DE
(72) SCHMID, Manuel, Willibald, Gartenstrasse 11, 86687 Altisheim, DE
(74) HOFFMANN EITLE, Patent- und Rechtsanwälte, Arabellastraße 4, 81925 München, DE

(51) (8) **EP 2298080**
A 23G 3/52
A 23G 1/52
A 23C 19/076
A 23G 1/10
A 23G 3/02
B 01F 5/04
(96) EP 09168923.2 28.08.2009. En
(97) EP 2298080 23.03.2011. 201112 En
(54) Method and apparatus for making aerated food product and product obtainable thereby
(71) Kraft Foods R & D, Inc., Three Lakes Drive, Northfield, IL 60093-2753, US
(72) Abylov, Melis, Schleissheimer Strasse 100a, 80797 München, DE;
Macura, Szymon Piotr, Barteczka 71A, 43400 Cieszyn, PL;
Klaus, Tadeusz, Przepilinskiego, 43400 Cieszyn, PL;
Simonson, Julie Ann, 43 Lakeview DR., Nj 08088 Tabernacle, US;
Pearson, Stephen Malcom, Am Schulgarten 21, 85662 Hohenbrunn, DE
(74) HOFFMANN EITLE, Patent- und Rechtsanwälte, Arabellastraße 4, 81925 München, DE

(51) (8) **EP 2309873 ***
A 23J 1/14
A 23J 3/14
A 23L 1/305
A 23L 2/66
C 07K 1/14
C 07K 14/415
(30) US 11.07.2008. 129673
(86) PCT/CA2009000962 10.07.2009.
(96) EP 09793761.9 10.07.2009. En
(87) WO2010003245 14.01.2010. 201002
(97) EP 2309873 20.04.2011. 201116 En
(54) SOLUBLE CANOLA PROTEIN ISOLATE PRODUCTION
(71) Burcon Nutrascience (MB) Corp., 1388 Waller Avenue, Winnipeg, Manitoba R3T 1P9, CA
(72) SCHWEIZER, Martin, 117 Haig Avenue, Winnipeg, Manitoba R2M 0E3, CA;

GREEN, Brent E., 24 Polarwood Drive, Warren, manitoba R0C 3E0, CA;
SEGALL, Kevin I., 31 Dunbar Crescent, Winnipeg, Manitoba R3P 0W6, CA;
LOGIE, James, c/o Burcon Nutrascience (MB) Corp, 1388 Waller Avenue, Winnipeg, Manitoba R3T 1P9, CA
(74) Selden, Deborah Anne, Beck Greener, Fulwood House, 12 Fulwood Place, London WC1V 6HR, GB

(51) (8) **EP 2320746 ***
A 23J 1/14
A 23J 3/14
A 23K 1/14
A 23L 1/305
A 23L 2/66
C 07K 1/00
C 07K 1/34
C 07K 14/415
(30) US 19.08.2008. 136208 P
(86) PCT/CA2009001152 17.08.2009.
(96) EP 09807785.2 17.08.2009. En
(87) WO2010020042 25.02.2010. 201008
(97) EP 2320746 18.05.2011. 201120 En
(54) SOLUBLE CANOLA PROTEIN ISOLATE PRODUCTION FROM PROTEIN MICELLAR MASS
(71) Burcon Nutrascience (MB) Corp., 1388 Waller Avenue, Winnipeg, Manitoba R3T 1P9, CA
(72) SEGALL, Kevin I., 31 Dunbar Crescent, Winnipeg, Manitoba R3P 0W6, CA;
GREEN, Brent E., 24 Poplarwood Drive, Winnipeg, Manitoba R0C 3E0, CA;
SCHWEIZER, Martin, 117 Haig Avenue, Winnipeg, Manitoba R2M 0E3, CA
(74) Selden, Deborah Anne, Beck Greener, Fulwood House, 12 Fulwood Place, London WC1V 6HR, GB

(51) (8) **EP 2320747 ***
A 23J 1/14
A 23J 3/14
A 23K 1/14
A 23L 1/305
C 07K 1/14
C 07K 14/415
(30) US 18.08.2008. 136192 P
(86) PCT/CA2009001148 18.08.2009.
(96) EP 09807782.9 18.08.2009. En
(87) WO2010020039 25.02.2010. 201008
(97) EP 2320747 18.05.2011. 201120 En
(54) PREPARATION OF CANOLA PROTEIN ISOLATE FROM CANOLA OIL SEEDS ("BLENDERTEIN")
(71) Burcon Nutrascience (MB) Corp., 1388 Waller Avenue, Winnipeg, Manitoba R3T 1P9, CA
(72) SEGALL, Kevin I., 31 Dunbar Crescent, Winnipeg, Manitoba R3P 0W6, CA;
GREEN, Brent E., 24 Poplarwood Drive, Winnipeg, Manitoba R0C 3E0, CA;
SCHWEIZER, Martin, 117 Haig Avenue, Winnipeg, Manitoba R2M 0E3, CA
(74) Selden, Deborah Anne, Beck Greener, Fulwood House, 12 Fulwood Place, London WC1V 6HR, GB

(51) (8) **EP 2269472**
A 23K 1/16
A 23K 1/18
(96) EP 09164557.2 03.07.2009. En
(97) EP 2269472 05.01.2011. 201101 En
(54) Animal feed for improving intestinal barrier properties
(71) Nutreco Nederland B.V., Veerstraat 38, 5831 JN Boxmeer, NL
(72) Smits, Coenraad Henricus Maria, Eikendreef 65, 6581 PC Malden, NL;
Van Dam, Johannes Teunis Pieter, Linnaeuslaan 83, 3903 GR Veenendaal, NL
(74) Hatzmann, Martin, Vereenigde, Johan de Wittlaan 7, 2517 JR Den Haag, NL

(51) (8) **EP 1811980 ***
A 23L 1/00
(30) US 30.09.2004. 614399 P
(86) PCT/US2005035190 30.09.2005.
(96) EP 05808487.2 30.09.2005. En
(87) WO2006039487 13.04.2006. 200615
(97) EP 1811980 01.08.2007. 200731 En
(54) SEALED, EDIBLE FILM STRIP PACKETS AND METHODS OF MAKING AND USING THEM
(71) The Hershey Company, Law Department, 100 Crystal A Drive, Hershey, Pennsylvania 17033, US
(72) CARROLL, Thomas, J., 33 Bridgeport Drive, Mechanicsburg, PA 17050, US;
KUMIEGA, Steven, M., 2150 Raleigh Road, Hummelstown, PA 17036, US;
PAUL, Brian, J., 264 James Road, Millersburg, PA 17061, US;
HUZINEC, Robert, J., 807 Zermatt Drive, Hummelstown, PA 17036, US;
WARD, Philip, C., 20 Clover Lane, Palmyra, PA 17078, US;
KLINE, Mary, Ellen, 610 Springton Way, Lancaster, PA 17601, US
(74) ZBM Patents, Zea, Barlocci & Markvardsen, Plaza Catalunya, 1, 08002 Barcelona, ES

(51) (8) **EP 2296490 ***
A 23L 1/00
A 23G 4/20
A 61K 9/28
(30) IT 15.05.2008. MI20080889
(86) PCT/EP2009003358 12.05.2009.
(96) EP 09745542.2 12.05.2009. En
(87) WO2009138208 19.11.2009. 200947
(97) EP 2296490 23.03.2011. 201112 En
(54) PROCESS FOR MANUFACTURING CHEWING GUM HAVING A COATING LAYER, AND THE CHEWING GUM OBTAINABLE BY SAID PROCESS
(71) Perfetti Van Melle S.p.A., Via XXV Aprile, 7, 20020 Lainate, IT
(72) COLLE, Roberto, Via XXV Aprile 7, I-20020 Lainate (MI), IT;
SARRICA, Andrea, Via XXV Aprile 7, I-20020 Lainate (MI), IT
(74) Minoja, Fabrizio, Bianchetti Bracco Minoja S.r.l., Via Plinio 63, 20129 Milano, IT

(51) (8) **EP 2263476**
A 23L 1/06
A 23L 1/212
A 23L 1/064
A 23L 1/068
(96) EP 09007952.6 17.06.2009. De
(97) EP 2263476 22.12.2010. 201051 De
(54) Fruit preparation
(71) WILD Dairy Ingredients GmbH, Rudolf-Wild-Straße 107-115, 69214 Eppelheim/Heidelberg, DE
(72) Wild, Hans-Peter, Rudolf-Wild-Straße 107-115, 69214 Eppelheim, DE;
Hilgemeyer, Sandra, Katharinenstraße 30, 68199 Mannheim, DE;
Chatard, Dominique, Rolloßweg 37, 69121 Heidelberg, DE;
Küssner, Klaus, Lerchenstraße 4, 69251 Gaiberg, DE
(74) Grünecker, Kinkeldey, Stockmair & Schwanhäusser, Anwaltssozietät, Leopoldstrasse 4, 80802 München, DE

(51) (8) **EP 2296495 ***
A 23L 1/29
A 23L 1/314
C 12N 9/10
A 23K 1/18
A 23L 1/305
A 23L 1/317
(30) GB 18.04.2008. 0807161
(86) PCT/IB2009005440 08.04.2009.
(96) EP 09732064.2 08.04.2009. En
(87) WO2009127969 22.10.2009. 200943
(97) EP 2296495 23.03.2011. 201112 En
(54) A CHOLESTEROL REDUCED MEAT BASED FOOD PRODUCT
(71) Danisco A/S, Langebrogade 1, PO Box 17, 1001 Copenhagen K, DK
(72) CHRISTIANSEN, Liv, Spångner, Sejrøgade 18, 4. tv., DK-8000 Zrhus, DK;
SOE, Jørn, Borch, Orøvænget 11, DK-8381 Tilst, DK;
KAMPP, Jesper, Kærgardsvej 5, 8660 - Skanderborg, DK
(74) Williams, Aylsa, D Young & Co LLP, 120 Holborn, London EC1N 2DY, GB

(51) (8) **EP 2296496 ***
A 23L 1/29
A 23L 1/236
A 23L 2/00
A 23L 2/56
A 23L 2/60
A 23F 3/00
A 23F 5/00
(30) DE 07.05.2008. 102008022704
DE 10.06.2008. 102008027684
(86) PCT/EP2009002454 03.04.2009.
(96) EP 09741794.3 03.04.2009. De
(87) WO2009135575 12.11.2009. 200946
(97) EP 2296496 23.03.2011. 201112 De
(54) GRANULATES FOR THE PREPARATION OF REDUCED-CALORIE INSTANT DRINKS
(71) Krüger GmbH & Co. KG, Senefelderstrasse 44, 51469 Bergisch-Gladbach, DE
(72) KRÜGER, Willibert, Zaunkönigweg 5, 51467 Bergisch Gladbach, DE
(74) Gesthuysen, von Rohr & Eggert, Patentanwälte, Postfach 10 13 54, 45013 Essen, DE

(51) (8) **EP 2308324**
A 23L 2/00
A 23J 7/00
A 23L 1/29
A 23C 9/00
A 23G 1/00
(30) US 31.05.2005. 685527 P
(96) EP 10189578.7 31.05.2006. En
(97) EP 2308324 13.04.2011. 201115 En
(54) Phosphatidylserine enriched milk fractions for the formulation of functional foods
(71) Arla Foods amba, Sønderhøj 14, 8260 Viby J, DK
(72) Burling, Hans, Arla Foods amba, c/o Arla Foods amba Sønderhøj 14, DK-8260, Viby J, DK;
Andersson, Ingemar, Arla Foods amba, c/o Arla Foods amba Sønderhøj 14, DK-8260, Viby J, DK;
Schneider, Michael, Arla Foods amba, Kr. Kausch-Strasse 26, D-67251, Freinsheim, DE
(74) Nilausen, Kim, et al, Zacco Denmark A/S, Hans Bekkevolds Allé 7, 2900 Hellerup, DK

(51) (8) **EP 2303041 ***
A 23L 3/3463
(30) US 24.06.2008. 75267 P
(86) PCT/US2009048517 24.06.2009.
(96) EP 09789939.7 24.06.2009. En
(87) WO2010008899 21.01.2010. 201003
(97) EP 2303041 06.04.2011. 201114 En
(54) PERACID AND 2-HYDROXY ORGANIC ACID COMPOSITIONS AND METHODS FOR TREATING PRODUCE
(71) Fresh Express Incorporated, 950 E. Blanco Road, Salinas CA 93901, US
(72) HO, Kai Lai, Grace, 19243 Dovewood Court, Salinas, CA 93908, US
(74) UEXKÜLL & STOLBERG, Patentanwälte, Beselerstraße 4, 22607 Hamburg, DE

(51) (8) **EP 2317881 ***
A 24D 1/04
A 24D 3/04
A 24C 5/56
A 24D 1/02
A 24D 3/06
(30) EP 02.06.2008. 08157446
(86) PCT/EP2009056715 02.06.2009.
(96) EP 09757503.9 02.06.2009. En
(87) WO2009147122 10.12.2009. 200950
(97) EP 2317881 11.05.2011. 201119 En
(54) SMOKING ARTICLE WITH TRANSPARENT SECTION
(71) Philip Morris Products S.A., Quai Jeanrenaud 3, 2000 Neuch?tel, CH
(72) CECCHETTO, Andrea, Sägemattstrasse 42, CH-3097 Liebfeld, CH;
CHAPUIS, Frédéric, Avenue Belvédre 24, CH-2025 Chez-le-Bart, CH;
PRESELLO, Marco, Rue du Stand 17, CH-2113 Boveresse, CH;

KUERSTEINER, Charles, Promenade de Flusel 30, CH-1008 Jouxtens-Mézery, CH
(74) Bohest AG, Postfach 160, 4003 Basel, CH

(51) (8) **EP 2299854 ***
A 24D 3/04
A 24D 3/14
(86) PCT/IB2008001758 15.04.2008.
(96) EP 08776327.2 15.04.2008. En
(87) WO2009127894 22.10.2009. 200943
(97) EP 2299854 30.03.2011. 201113 En
(54) FILTER FOR A SMOKING ARTICLE
(71) Pt Hanjaya Mandala Sampoerna Tbk., J1 Rungkut Industri Raya No.18, Surabaya 60293, ID
(72) PANJAITAN, Daniel, JI. Kayujati IV/27, Rawamangun, Jakarta timur 13220, ID;
SURYANEGARA, Imam, Taufik, JI Dahlia No. 6, RT06/RW01, Lanudal Juanda, Sedati-sidoarjo 61253, ID
(74) Taylor, Gillian Claire, Reddie & Grose, 16 Theobalds Road, London WC1X 8PL, GB

(51) (8) **EP 2311332**
A 24F 25/02
(30) ES 27.11.2007. 200703151
(86) PCT/ES2008000744 27.11.2008.
(96) EP 08855275.7 27.11.2008. Es
(87) WO2009068715 04.06.2009. 200923
(97) EP 2311332 20.04.2011. 201116 En
(54) DOUBLE-CHAMBER HUMIDIFIER TUBE
(71) Nelson, Alfonso Egüed, Capitán Haya 60, Piso 7-2, 28020 Madrid, ES
(72) Nelson, Alfonso Egüed, Capitán Haya 60, Piso 7-2, 28020 Madrid, ES
(74) Fernandez Lerroux, Aurelio, Nunez de Balboa, 54, 3rd Floor, 28001 Madrid, ES

(51) (8) **EP 2022357**
A 41G 5/00
(96) EP 07450133.9 03.08.2007. De
(97) EP 2022357 11.02.2009. 200907 De
(54) Hair strip for hair extension and thickening
(71) Bege Privatstiftung, Schubertring 8, 1010 Wien, AT
(72) Ott, Gerhard, Annenstrasse 60, 8020 Graz, AT
(74) Patentanwälte, Barger, Piso & Partner, Mahlerstrasse 9, Postfach 96, 1015 Wien, AT

(51) (8) **EP 2320762 ***
A 43B 7/06
A 43B 7/12
A 43B 13/16
(30) IT 30.06.2008. PD20080196
(86) PCT/EP2009057564 18.06.2009.
(96) EP 09772317.5 18.06.2009. En
(87) WO2010000617 07.01.2010. 201001
(97) EP 2320762 18.05.2011. 201120 En
(54) INSERT FOR SOLES, PARTICULARLY FOR PERFORATED SOLES MADE OF POLYMERIC MATERIAL COMPRISING A MEMBRANE THAT IS IMPERMEABLE TO WATER AND PERMEABLE TO WATER VAPOR, AND SOLE COMPRISING SAID INSERT
(71) Geox S.p.A., Via Feltrina Centro, 16, 31044 Montebelluna Località Biadene (Treviso), IT
(72) POLEGATO MORETTI, Mario, Via Fantin 96, I-31035 Crocetta Del Montello, IT
(74) Modiano, Micaela Nadia, Modiano & Partners, Via Meravigli, 16, 20123 Milano, IT

(51) (8) **EP 2301374**
A 44C 5/20
G 09F 3/16
(30) CN 29.09.2009. 200910192808
(96) EP 09175100.8 05.11.2009. En
(97) EP 2301374 30.03.2011. 201113 En
(54) Kid identification wristband
(71) B&B Exporting Limited, Bldg. D, Xinhe Industrial Park, Huashan Sandong Avenue, Huadu, Guangzhou 510880, CN
(72) Xu, Yuanzhi, B&B EXPORTING LIMITED, Bldg. No. D, Xinhe Industria, 510880, Huadu, Guangzhou, CN
(74) Olsen, Peter Vestergaard, et al, Patrade A/S, Fredens Torv 3A, 8000 Aarhus C, DK

(51) (8) **EP 2303060 ***
A 45F 3/04
A 45F 3/08
(86) PCT/TR2008000075 23.06.2008.
(96) EP 08794250.4 23.06.2008. En
(87) WO2009157881 30.12.2009. 200953
(97) EP 2303060 06.04.2011. 201114 En
(54) MILITARY PERSONNEL EXIGENCIES AND AMMUNITION CARRIER SYSTEM
(71) Öztek Tekstil Terbiye Tesisleri Sanayi, Ve Ticaret Anonim Sirketi, E-5 Karayolu Misinli, Kavsagi Corlu, 59860 Tekirdag, TR;
Linosport Spor Ve Kamp Malzemeleri Sanayi Ticaret, Limited Sirket, Cevdet Pasa Cad. 7/9 Oral Ap. Bebek, Istanbul, TR
(72) ESREF, Akin, E-5 Karayolu Misinli Kavsagi 59860, Corlu Tekrdag, TR;
ÜLKÜMEN, Nail Oral, Cevdet Pasa Cad. 7/9 Oral Ap. Bebek, Istanbul, TR
(74) Iskender, Ibrahim, Destek Patent Inc., Patent Department, Osmangazi Mah., Tophane Ortapazar Cad., Zindankapi Sok. No: 10, Osmangazi 16040 Bursa, TR

(51) (8) **EP 2227992**
A 47G 9/00
A 61N 1/16
(96) EP 09014109.4 11.11.2009. De
(97) EP 2227992 15.09.2010. 201037 De
(54) Body designed in the style of a textile cover or pacifier
(71) Hannemann, Oliver, Diestelstrasse 15 a, 22397 Hamburg, DE
(72) Hannemann, Oliver, Diestelstrasse 15, 22397 Hamburg, DE;
Hannemann, Patrick, Diestelstrasse 15, 22397 Hamburg, DE
(74) Niedmers, Ole, Patentanwälte, Niedmers Jaeger Köster, Van-der-Smissen-Strasse 3, 22767 Hamburg, DE

(51) (8) **EP 2303071 ***
A 47G 9/02
A 01G 9/02
(30) DE 23.07.2008. 202008009930 U
(86) PCT/EP2009005336 23.07.2009.
(96) EP 09777377.4 23.07.2009. De
(87) WO2010009883 28.01.2010. 201004
(97) EP 2303071 06.04.2011. 201114 De

(54) DEVICE FOR INCREASING THE STABILITY OF VESSELS, SUCH AS SAUCEPANS, VASES OR SIMILAR
(71) Gabbert, Chistiane, Krüllsdyk 137, 47803 Krefeld, DE; Spohn, Annette, Zum Vossort 8, 49214 Bad Rothenfelde, DE; Winter, Sabine, Neuer Kamp 11, 59227 Ahlen, DE
(72) Gabbert, Chistiane, Krüllsdyk 137, 47803 Krefeld, DE; Spohn, Annette, Zum Vossort 8, 49214 Bad Rothenfelde, DE; Winter, Sabine, Neuer Kamp 11, 59227 Ahlen, DE
(74) DR. STARK & PARTNER, PATENTANWÄLTE, Moerser Straße 140, 47803 Krefeld, DE

(51) (8) **EP 2299878 ***
A 47J 31/00
A 47J 31/46
A 47J 31/36
(86) PCT/IT2008000297 30.04.2008.
(96) EP 08763849.0 30.04.2008. It
(87) WO2009133578 05.11.2009. 200945
(97) EP 2299878 30.03.2011. 201113 En
(54) ESPRESSO COFFEE MACHINE WITH PREINFUSION DEVICE
(71) La Marzocco S.r.l., Via Angiolo Tavanti 16, 50134 Firenze, IT
(72) BAMBI, Piero, Via Bellosguardo 30, I-50019 Sesto Fiorentino (FI), IT
(74) Martini, Riccardo, Brema SRL, Piazza Enriquez, 22/c, 47891 Dogana, SM

(51) (8) **EP 2218367**
A 47J 31/36
(30) IT 03.11.2008. TV20080139
(96) EP 09174165.2 27.10.2009. It
(97) EP 2218367 18.08.2010. 201033 En
(54) Perforation device for capsules and machine for preparing beverages incorporating said device
(71) Hausbrandt Trieste 1892 SPA, Via Foscarini 52, 31040 Nervesa della Battaglia (TV), IT
(72) Zanetti, Martino, Viale Felissent, 55, 31050, Villlorba (TV), IT
(74) Dragotti, Gianfranco, et al, Dragotti & Associati srl, Via Paris Bordone 9, 31100 Treviso, IT

(51) (8) **EP 2303077 ***
A 47J 31/36
(30) EP 17.06.2009. 09162895
EP 17.06.2009. 09162914
EP 17.06.2009. 09162931
EP 19.06.2009. 09163310
EP 13.08.2009. 09167851
EP 17.09.2009. 09170590
(86) PCT/NL2009050822 30.12.2009.
(96) EP 09796115.5 30.12.2009. En
(87) WO2010137954 02.12.2010. 201048
(97) EP 2303077 06.04.2011. 201114 En
(54) CAPSULE, SYSTEM AND METHOD FOR PREPARING A PREDETERMINED QUANTITY OF BEVERAGE SUITABLE FOR CONSUMPTION
(71) Sara Lee/DE N.V., Keulsekade 143, 3532 AA Utrecht, NL
(72) KAMERBEEK, Ralf, Ten Veldestraat 59, NL-3454 EJ De Meern, NL;
FLAMAND, John Henri, Meuluntersewegh 72, NL-6741 HP Lunteren, NL;
POST VAN LOON, Angenita Dorothea, Weerschijnvlinder 11, NL-3544 DT Utrecht, NL;
KOELING, Hendrik Cornelis, Harderwijkkade 11, NL-3826 BE Amersfoort, NL;
BIESHEUVEL, Arend Cornelis Jacobus, Raadhuislaan 7, NL-4251 VS Werkendam, NL
(74) Jansen, Cornelis Marinus, VEREENIGDE, Johan de Wittlaan 7, 2517 JR Den Haag, NL

(51) (8) **EP 2306871 ***
A 47J 31/36
B 65D 85/804
(30) EP 17.06.2009. 09163008
(86) PCT/NL2009050821 30.12.2009.
(96) EP 09796114.8 30.12.2009. En
(87) WO2010137953 02.12.2010. 201048
(97) EP 2306871 13.04.2011. 201115 En
(54) SYSTEM, CAPSULE AND METHOD FOR PREPARING A BEVERAGE
(71) Sara Lee/DE N.V., Keulsekade 143, 3532 AA Utrecht, NL
(72) KAMERBEEK, Ralf, Ten Veldestraat 59, NL-3454 EJ De Meern, NL;
FLAMAND, John Henri, Meuluntersewegh 72, NL-6741 HP Lunteren, NL;
POST VAN LOON, Angenita Dorothea, Weerschijnvlinder 11, NL-3544 DT Utrecht, NL;
KOELING, Hendrik Cornelis, Harderwijkkade 11, NL-3826 BE Amersfoort, NL;
BIESHEUVEL, Arend Cornelis Jacobus, Raadhuislaan 7, NL-4251 VS Werkendam, NL
(74) Jansen, Cornelis Marinus, VEREENIGDE, Johan de Wittlaan 7, 2517 JR Den Haag, NL

(51) (8) **EP 2131707 ***
A 47J 37/07
(86) PCT/US2008054506 21.02.2008.
(96) EP 08730331.9 21.02.2008. En
(87) WO2009105099 27.08.2009. 200935
(97) EP 2131707 16.12.2009. 200951 En
(54) BARBECUE GRILL
(71) Weber-Stephen Products CO., 200 E. Daniels Road, Palatine, IL 60067, US
(72) BRUNO, Adrian, A., 2509 Millcreek Lane, Rolling Meadows, IL 60008, US
(74) Crouch, David John, et al, Bromhead Johnson, 19 Buckingham Street, London, WC2N 6EF, GB

(51) (8) **EP 2315544 ***
A 47K 3/40
E 03C 1/28
(30) DE 26.08.2008. 202008011354 U
DE 17.12.2008. 102008062388
DE 09.03.2009. 102009011712
(86) PCT/EP2009060977 26.08.2009.
(96) EP 09782198.7 26.08.2009. De
(87) WO2010026088 11.03.2010. 201010
(97) EP 2315544 04.05.2011. 201118 De
(54) FOAM SHOWER BASE ELEMENT
(71) Illbruck Sanitärtechnik GmbH, Illbruckstrasse 1, 34537 Bad Wildungen, DE
(72) BOLSMANN, Christian, Am Urtl 14, 85652 Gelting, DE; MICHEL, Andreas, Hinter'm Dorfe 2, 34549 Edertal, DE;

WAGENFELDT, Jens, Kirschgartenstraße 20, 34537 Bad Wildungen, DE;
RÖMER, Manfred, Holderbach 7, 34528 Borken, DE;
IGLHAUT, Karl, Am Weinberg 3, 34560 Fritzlar, DE;
BLUMENBERG, Peter, Domänenweg 9, 34513 Waldeck, DE
(74) Müller, Enno, et al, Rieder & Partner, Corneliusstraße 45, 42329 Wuppertal, DE

(51) (8) **EP 2305086**
A 47K 7/00
A 47K 10/16
A 47K 10/20
A 47K 10/42
B 65D 83/08
(30) JP 31.03.2008. 2008094286
(86) PCT/JP2009056512 30.03.2009.
(96) EP 09726649.8 30.03.2009. Ja
(87) WO2009123123 08.10.2009. 200941
(97) EP 2305086 06.04.2011. 201114 En
(54) STACKED SHEET BODY AND SHEET STORING DEVICE
(71) Unicharm Corporation, 182 Shimobun, Kinsei-cho, Shikokuchuo-shi, Ehime 799-0111, JP
(72) BANDOH, Takeshi, c/o UNI-CHARM CORPORATION, Technical Center, 1531-7 Wadahama, Toyohama-cho, Kanonji-shi, Kagawa 7691602, JP
(74) Murgatroyd, Susan Elizabeth, et al, Baron Warren Redfern, 19 South End, Kensington, London, W8 5BU, GB

(51) (8) **EP 2303083** *
A 47K 11/02
F 23D 14/02
F 23D 14/82
(30) NO 25.04.2008. 20081980
(86) PCT/NO2009000160 27.04.2009.
(96) EP 09734856.9 27.04.2009. En
(87) WO2009131468 29.10.2009. 200944
(97) EP 2303083 06.04.2011. 201114 En
(54) AN INCINERATION SYSTEM AND BURNER FOR A TOILET
(71) Sirius Technology AS, Sjoviksveien 1, 6475 Midsund, NO
(72) ASLAKSEN, Odd Arne, Grønnvollv. 27, N-9062 Furuflaten, NO
(74) Smedseng, Øyvind, et al, Oslo Patentkontor AS, P.O. Box 7007 M, 0306 Oslo, NO

(51) (8) **EP 2308361**
A 47L 13/10
A 47L 13/20
(30) JP 31.03.2008. 2008090888
(86) PCT/JP2009056519 30.03.2009.
(96) EP 09729139.7 30.03.2009. Ja
(87) WO2009123129 08.10.2009. 200941
(97) EP 2308361 13.04.2011. 201115 En
(54) CLEANER AND CLEANING BODY
(71) UNI-CHARM CORPORATION, 182 Shimobun, Kinsei-cho, Shikokuchuo-shi, Ehime 799-0111, JP
(72) TANAKA, Yoshinori, c/o UNI-CHARM CORPORATION, Technical Center, 1531-7 Wadahama, Toyohama-cho, Kanonji-shi, Kagawa 769-1602, JP;
FUKUZAWA, Masumi, c/o UNI-CHARM CORPORATION, Technical Center, 1531-7 Wadahama, Toyohama-cho, Kanonji-shi, Kagawa 769-1602, JP
(74) Murgatroyd, Susan Elizabeth, et al, Baron Warren Redfern, 19 South End, Kensington, London, W8 5BU, GB

(51) (8) **EP 2296528** *
A 61B 1/018
A 61B 17/29
A 61B 17/00
A 61B 17/30
A 61B 17/34
(30) US 16.06.2008. 129268 P
US 10.06.2009. 482081
(86) PCT/US2009047244 12.06.2009.
(96) EP 09767530.0 12.06.2009. En
(87) WO2009155220 23.12.2009. 200952
(97) EP 2296528 23.03.2011. 201112 En
(54) METHODS AND DEVICES FOR ACCESSING ANATOMIC STRUCTURES
(71) Boston Scientific Scimed, Inc., One Scimed Place, Maple Grove, MN 55311-1566, US
(72) WEITZNER, Barry, 3 MacLeod Lane, Acton, MA 01720, US;
THOMPSON, Christopher, 145 Brookline Street, Needham, MA 02492, US
(74) Hauck Patent- und Rechtsanwälte, Neuer Wall 50, 20354 Hamburg, DE

(51) (8) **EP 2296529** *
A 61B 1/018
(30) BR 11.07.2008. PI0802525
(86) PCT/BR2009000203 13.07.2009.
(96) EP 09775667.0 13.07.2009. En
(87) WO2010003208 14.01.2010. 201002
(97) EP 2296529 23.03.2011. 201112 En
(54) SURGICAL ENDOSCOPE
(71) Hashiba, Kyioshi, Rua Anatólia 105, PQT Boçava, Cep: 05471-000 São Paulo - SP, BR;
SOCIEDADE BENEFICENTE DE SENHORAS HOSPITAL, SÍRIO E LIBANÊS, Rua da Adma Jefet 91, Cerqueira César, 01308-050 São Paulo SP, BR
(72) FILHO, Dorival Zito, Rua Japão 63 - AP 103, Itaim Bibi, Cep: 04530-070 São Paulo - SP, BR;
SIQUEIRA, Pablo Rodrigo de, Rua DR. Miranda de Azevedo nr 1155 apto. 42, Cep: 05027-000 São Paulo - SP, BR;
SHIGUEKI OZAWA, Hélio, Rua Bento de Faria 319, Saúde, Cep: 04151-020 São Paulo - SP, BR
(74) Burt, Matthew Thomas, et al, Abel & Imray, 20 Red Lion Street, London WC1R 4PQ, GB

(51) (8) **EP 2315549** *
A 61B 5/00
G 06F 3/048
H 04L 9/32
G 08B 1/08
G 06F 15/16
G 06N 5/02
(30) US 18.07.2008. 82106
(86) PCT/US2009050971 17.07.2009.

(96) EP 09798798.6 17.07.2009. En
(87) WO2010009382 21.01.2010. 201003
(97) EP 2315549 04.05.2011. 201118 En

(54) ANALYTE MEASUREMENT AND MANAGEMENT DEVICE AND ASSOCIATED METHODS
(71) Lifescan, Inc., 1000 Gibraltar Drive, Milpitas, CA 95035, US
(72) SIEH, Zara, 487 Montori Court, Pleasanton, CA 94566, US;
HORWITZ, David, 475 Tyndall, Los Altos, CA 94066, US;
PRICE, David, 1691 Calle Alegre, Pleasanton, CA 94566, US;
KRULEVITCH, Peter, 1122 Division Street, Pleasanton, CA 94566, US;
SAVAGE, Donna, 5268 Willow Wood Road, Rolling Hills Estates, CA 90274, US;
SHARTLE, Robert, 2044 Mitchell Drive, Arnold, CA 95223, US
(74) Tunstall, Christopher Stephen, Carpmaels & Ransford, One Southampton Row, London, WC1B 5HA, GB

---

(51) (8) **EP 2303114 ***
A 61B 5/055
A 61B 6/03
A 61K 49/00
G 01T 1/161
G 01T 1/164
G 01T 1/29
(30) US 04.04.2008. 42480
(86) PCT/US2009039511 06.04.2009.
(96) EP 09729064.7 06.04.2009. En
(87) WO2009124273 08.10.2009. 200941
(97) EP 2303114 06.04.2011. 201114 En
(54) RADIOPHARMACEUTICAL IMAGING OF NEURODEGENERATIVE DISEASES
(71) Avid Radiopharmaceuticals, Inc., 3624 Market Street, 5th Floor, Philadelphia, PA 19104, US
(72) HEFTI, Franz F., 121 Boulderwood Drive, Bernardsville, New Jersey 07924, US;
SKOVRONSKY, Daniel M., 23 Beech Tree Drive, Glen Mills, Pennsylvania 19342, US;
CARPENTER, Alan P. Jr., 73 Cranberry Hill Lane, Carlisle, Massachusetts 01741, US
(74) Ouzman, Beverley Nicola Claire, Murgitroyd & Company, Scotland House, 165-169 Scotland Street, Glasgow G5 8PL, GB

---

(51) (8) **EP 2317930 ***
A 61B 17/00
(30) US 21.07.2008. 129812 P
US 19.05.2009. 453693
(86) PCT/US2009050507 14.07.2009.
(96) EP 09790387.6 14.07.2009. En
(87) WO2010011530 28.01.2010. 201004
(97) EP 2317930 11.05.2011. 201119 En
(54) DEVICE TO CLOSE OPENINGS IN BODY TISSUE
(71) Boston Scientific Scimed, Inc., One Scimed Place, Maple Grove, MN 55311-1566, US
(72) EIDENSCHINK, Tracee, E.J., 2232 Pinto Drive, Wayzata, MN 55391, US;
WEBER, Jan, Holdaal 49, 6228 GJ Maastricht, NL
(74) Hauck Patent- und Rechtsanwälte, Neuer Wall 50, 20354 Hamburg, DE

---

(51) (8) **EP 2299913 ***
A 61B 17/04
A 61B 17/06
(30) US 07.06.2008. 135176
(86) PCT/US2009046371 05.06.2009.
(96) EP 09759485.7 05.06.2009. En
(87) WO2009149326 10.12.2009. 200950
(97) EP 2299913 30.03.2011. 201113 En
(54) DEVICES FOR TENSIONING BARBED SUTURES
(71) Ethicon, Inc, U.S. Route 22, Somerville, NJ 08876, US
(72) LINDH, SR., David, 138 Allens Corner Road, Flemington, NJ 08822, US;
NAWROCKI, Jesse, G., 8 Grace Drive, Annandale, NJ 08801, US;
MATONICK, John, P., 17 Indian Rock Road, Warren, NJ 07059, US
(74) James, Anthony Christopher W.P., Carpmaels & Ransford, One Southampton Row, London, WC1B 5HA, GB

---

(51) (8) **EP 2313014 ***
A 61B 17/128
(30) US 09.07.2008. 170126
(86) PCT/US2009049907 08.07.2009.
(96) EP 09790147.4 08.07.2009. En
(87) WO2010006028 14.01.2010. 201002
(97) EP 2313014 27.04.2011. 201117 En
(54) DEVICES AND METHODS FOR PLACING OCCLUSION FASTENERS
(71) Ethicon Endo-Surgery, Inc., 4545 Creek Road, Cincinnati, OH 45242, US
(72) STEFANCHIK, David, 5792 Cabernet Court, Morrow, OH 45152, US
(74) Tunstall, Christopher Stephen, Carpmaels & Ransford, One Southampton Row, London, WC1B 5HA, GB

---

(51) (8) **EP 2305146**
A 61B 17/326
(30) CN 25.06.2008. 200810115588
(86) PCT/CN2009000406 16.04.2009.
(96) EP 09768700.8 16.04.2009. Zh
(87) WO2009155775 30.12.2009. 200953
(97) EP 2305146 06.04.2011. 201114 En
(54) ANASTOMAT FOR CIRCUMCISION
(71) Shang, Jianzhong, 7 F, 1, Zhongshan Building, Zhonghe Road, Wuhu, Anhui 241000, CN
(72) Shang, Jianzhong, 7 F, 1, Zhongshan Building, Zhonghe Road, Wuhu, Anhui 241000, CN
(74) Richter, Werdermann, Gerbaulet & Hofmann, Patentanwälte, Neuer Wall 10, 20354 Hamburg, DE

---

(51) (8) **EP 2294994**
A 61B 17/64
(96) EP 09170102.9 11.09.2009. En
(97) EP 2294994 16.03.2011. 201111 En
(54) External fixation component
(71) Stryker Trauma SA, Bohnackerweg 1, 2545 Selzach, CH
(72) Mürner, Beat, Faltschen, 3713 Reichenbach, CH;
Verma, Umesh, C-404/2, 17A Street, Main Market, Bhajan Pura, Delhi 110053, IN;

Mathur, Usha, 216 Village Kirari Suleman Nagar, Post Office Sultan Puri, New Delhi 110086, IN;
Wider, Robert, Löhrstrasse 10, 4552 Derendingen, CH;
Thomke, Roland, Turbenstrasse 1, 4512 Bellach, CH
(74) Liebetanz, Michael, Isler & Pedrazzini AG, Gotthardstrasse 53, Postfach 1772, 8027 Zürich, CH

(51) (8) **EP 2077782** *
A 61B 17/70
(30) US 05.10.2006. 850373 P
(86) PCT/US2007080283 03.10.2007.
(96) EP 07843734.0 03.10.2007. En
(87) WO2008042948 10.04.2008. 200815
(97) EP 2077782 15.07.2009. 200929 En
(54) ANCHOR ASSEMBLY FOR SPINAL IMPLANT SYSTEM
(71) Pierce, Javin, 4856 Mountain Road, Stowe, VT 05672, US;
Cammisa, Frank, 39 Lismore Lane, Greenwich, CT 06831, US
(72) Pierce, Javin, 4856 Mountain Road, Stowe, VT 05672, US;
Cammisa, Frank, 39 Lismore Lane, Greenwich, CT 06831, US
(74) Grünecker, Kinkeldey, Stockmair & Schwanhäusser, Anwaltssozietät, Leopoldstrasse 4, 80802 München, DE

(51) (8) **EP 2206476**
A 61B 18/14
(30) US 31.12.2008. 142128 P
US 30.06.2009. 495691
(96) EP 09168202.1 14.08.2009. En
(97) EP 2206476 14.07.2010. 201028 En
(54) Apparatus, systems and methods for achieving intravascular, thermally-induced renal neuromodulation
(71) Ardian, Inc., 1810A Embarcadero Road, Palo Alto, CA 94303, US
(72) Wu, Andrew, 506 Gibralter Lane, Foster City, CA 94404, US;
Clark, Benjamin J, 498 Alameda de las Pulgas, Redwood City, CA 94062, US;
Zarins, Denise, 15403 Shannon Road, Los Gatos, CA 95032, US;
Thai, Erik, 2318 Brushgen Way, San Jose, CA 95133, US
(74) Donald, Jenny Susan, Forrester & Boehmert, Pettenkoferstrasse 20-22, 80336 München, DE

(51) (8) **EP 2129319** *
A 61C 1/08
(30) IT 26.03.2007. BS20070040
(86) PCT/IT2007000861 11.12.2007.
(96) EP 07866793.8 11.12.2007. En
(87) WO2008117323 02.10.2008. 200840
(97) EP 2129319 09.12.2009. 200950 En
(54) MANUFACTURING METHOD OF A GUIDING TEMPLATE FOR DENTAL IMPLANTOLOGY, GUIDING TEMPLATE MANUFACTURED THEREBY AND REFERENCE DEVICE FOR THE EXECUTION OF SUCH METHOD
(71) Studio Dentistico Dr. Jacotti Michele, Via Solferino 55, 25121 Brescia, IT
(72) JACOTTI, Michele, Via Solferino, 55, I-25121 Brescia, IT
(74) Pulieri, Gianluca Antonio, Jacobacci & Partners S.p.A., Piazza della Vittoria, 11, 25122 Brescia, IT

(51) (8) **EP 2127613**
A 61C 8/00
A 61C 13/00
(30) WO 01.02.2007. PCT/CN2007/000353
(86) PCT/CN2008000200 28.01.2008.
(96) EP 08700743.1 28.01.2008. Zh
(87) WO2008095403 14.08.2008. 200833
(97) EP 2127613 02.12.2009. 200949 En
(54) ARTIFICAL TEETHRIDGE AND FANG
(71) 5-7 Corporation Limited, No. 79, Wunchang E. 3rd Street, Beitun District, Taichung City 406, CN
(72) CHEN, Lieh-Tang, N· 23, Guangsi Lane, Sec. 2, Dongshan Rd., Beitun, Taichung City 406, Taiwan, CN;
CHEN, Chen-Chu, N· 23, Guangsi Lane, Sec. 2, Dongshan Rd., Beitun, Taichung City 406, Taiwan, CN
(74) Chaillot, Genevive, et al, Cabinet Chaillot, 16-20 Avenue de l'Agent Sarre, B.P. 74, 92703 Colombes Cedex, FR

(51) (8) **EP 2223667**
A 61C 8/00
(96) EP 09002744.2 26.02.2009. En
(97) EP 2223667 01.09.2010. 201035 En
(54) A dental implant, a dental implant kit and a method of connecting a super-structure
(71) Nobel Biocare Services AG, Postfach, 8058 Zürich-Flughafen, CH
(72) Brajnovic, Izidor, Nybovägen 1, 51170 Rydal, SE
(74) Byström, Kurt Linus, Nobel Biocare AB, Box 5190, 402 26 Göteborg, SE

(51) (8) **EP 2229914**
A 61C 13/00
A 61C 19/05
A 61C 9/00
(96) EP 09004003.1 20.03.2009. En
(97) EP 2229914 22.09.2010. 201038 En
(54) System and method for aligning virtual models
(71) Nobel Biocare Services AG, Postfach, 8058 Zürich-Flughafen, CH
(72) Nilsson, Urban, Veneröd 570, 44295 Hålta, SE
(74) Byström, Kurt Linus, Nobel Biocare AB, Box 5190, 402 26 Göteborg, SE

(51) (8) **EP 2306923** *
A 61C 13/01
A 61C 13/36
A 61C 13/38
A 61C 19/04
(30) AU 11.06.2008. 2008902951
AU 22.12.2008. 2008906576
(86) PCT/AU2009000731 11.06.2009.
(96) EP 09761167.7 11.06.2009. En
(87) WO2009149502 17.12.2009. 200951
(97) EP 2306923 13.04.2011. 201115 En
(54) DENTURES, DENTAL ARCHES AND METHODS OF MANUFACTURE
(71) Accentu8 Novotecnica Pty Ltd, 907 High Street, Thornbury, Victoria 3071, AU
(72) RIGGIO, Sebastian, 907 High Street, Thornbury, Victoria 3071, AU
(74) Simon, Josef, et al, Lindner Blaumeier, Patent- und Rechtsanwälte, Dr.-Kurt-Schumacher-Straße 23, 90402 Nürnberg, DE

(51) (8) **EP 2303184 ***
A 61F 2/00
A 61F 13/00
(30) US 24.06.2008. 75284 P
(86) PCT/US2009048452 24.06.2009.
(96) EP 09798519.6 24.06.2009. En
(87) WO2010008883 21.01.2010. 201003
(97) EP 2303184 06.04.2011. 201114 En
(54) COMBINATION TREATMENT OF GLAUCOMA
(71) QLT Plug Delivery, Inc., 1098 Hamilton Court, Menlo Park, CA 94025, US
(72) BUTUNER, Zuhal, 18 Howard Avenue, Oakville, ON L6J 3Y3, CA
(74) Vossius & Partner, Siebertstrasse 4, 81675 München, DE

(51) (8) **EP 2313026 ***
A 61F 2/00
(30) US 09.10.2008. 104129 P
US 12.08.2008. 88155 P
(86) PCT/US2009053569 12.08.2009.
(96) EP 09807229.1 12.08.2009. En
(87) WO2010019680 18.02.2010. 201007
(97) EP 2313026 27.04.2011. 201117 En
(54) ACTIVE DELIVERY SYSTEM FORMULATIONS
(71) Castle Beach, L.L.C., 2533 North Carson Street, Carson City, NV 89706, US
(72) DUNTON, Ronald, K., 11781-A, Watertank Road, Burlington, WA 98233, US;
PITTS, R., Gary, 11858 Mile Drive, Nevada City, CA 95959-9110, US;
HOMOLA, Andrew, M., 5960 Spanish Oaks Lane, Naples, FL 34119, US
(74) Ilgart, Jean-Christophe, et al, BREVALEX, 95 rue d'Amsterdam, 75378 Paris Cedex 8, FR

(51) (8) **EP 2309950 ***
A 61F 2/42
A 61F 2/28
A 61F 2/30
(30) US 11.07.2008. 134702
US 23.06.2009. 219508
(86) PCT/US2009050269 10.07.2009.
(96) EP 09790284.5 10.07.2009. En
(87) WO2010006270 14.01.2010. 201002
(97) EP 2309950 20.04.2011. 201116 En
(54) RESORBABLE MEDICAL IMPLANTS AND RELATED METHODS
(71) Integra LifeSciences Corporation, 311 Enterprise Drive, Plainsboro, NJ 08536, US
(72) WEISS, Amold-peter, C., 23 Nayatt Road, Barrington, RI 02806, US;
PATEL, Jignesh, B., 199 Justice Drive, Newtown, PA 18940, US;
VOHRA, Karishma, 105 Rye Road, Cherry Hill, NJ 08003, US;
DESAI, Namrata, 235 Marcia Way, Bridgewater, NJ 08807, US;
INGRAM, Ronald, T., 2072 Wandering Road, Encinitas, CA 92024, US;
SPILKER, Mark, 18 Haymarket Court, Cranbury, NJ 08512, US;
PRYOR, Timothy, J., 342 Richard Road, Yardley, PA 19067, US;
BEAM-BRENNAN, Heather, 38 Dover Court, Tinton Falls, NJ 07712-7764, US
(74) Sandmann, Wolfgang, Reinhard, Skuhra, Weise & Partner GbR, Patent- und Rechtsanwälte, Friedrichstrasse 31, 80801 München, DE

(51) (8) **EP 2299951 ***
A 61F 6/22
(30) US 21.05.2008. 55046
US 16.05.2008. 54023
US 19.05.2008. 54206
US 21.05.2008. 55072
(86) PCT/US2009044381 18.05.2009.
(96) EP 09747767.3 18.05.2009. En
(87) WO2009140686 19.11.2009. 200947
(97) EP 2299951 30.03.2011. 201113 En
(54) OCCLUSION DEVICE AND SYSTEM FOR OCCLUDING A REPRODUCTIVE BODY LUMEN
(71) Conceptus, Inc., 331 East Evelyn Street, Mountain View, CA 94041, US
(72) JIMENEZ, Jose'W., 10700 Bren Road West, Minnetonka, MN 55343, US;
MUJWID, James, R., 10700 Bren Road West, Minnetonka, MN 55343, US;
TREMULIS, William, S., 10700 Bren Road West, Minnetonka, MN 55343, US;
FRIGSTAD, John, R., 10700 Bren Road West, Minnetonka, MN 55343, US;
JAGGER, Karl, A., 10700 Bren Road West, Minnetonka, MN 55343, US;
ARNAL, Kevin, R., 10700 Bren Road West, Minnetonka, MN 55343, US;
CALLISTER, Jeffrey, P., 10700 Brent Road West, Minnetonka, MN 55343, US
(74) Bartle, Robin Jonathan, W.P. Thompson & Co., Coopers Building, Church Street, Liverpool, L1 3AB, GB

(51) (8) **EP 2296595 ***
A 61F 7/03
(30) US 15.05.2008. 53480 P
US 29.08.2008. 93009 P
(86) PCT/US2009043779 13.05.2009.
(96) EP 09747461.3 13.05.2009. En
(87) WO2009140377 19.11.2009. 200947
(97) EP 2296595 23.03.2011. 201112 En
(54) PORTABLE MOIST HEAT SYSTEM
(71) Wyeth LLC, Five Giralda Farms, Madison, NJ 07940, US
(72) WONG, Vincent, York-leung, 6467 Katherine Manor Court, Liberty Township, OH 45011, US;
BELKIN, Marina, 7615 DeVONwood Drive, West Chester, OH 45069, US;
HICKSON, Chad, Kamil, 329 Plum Street 103 C, Cincinnati, OH 45202, US;
OWENS, Leroy, Glenn, Jr., 6734 Somerset Drive, Cincinnati, OH 45224, US
(74) Rutt, Jason Edward, Pfizer Limited, European Patent Department, Ramsgate Road, Sandwich, Kent CT13 9NJ, GB

(51) (8) **EP 2313038 ***
A 61F 7/10
(30) IT 31.07.2008. FE20080025
(86) PCT/EP2009059774 28.07.2009.
(96) EP 09802512.5 28.07.2009. En

(87) WO2010012750 04.02.2010. 201005
(97) EP 2313038 27.04.2011. 201117 En
(54) ARTICLE WITH REFRESHING OR WARMING EFFECT FOR USER
(71) Bordoni, Claudio, 7 Via Luciano Laurana, 62010 Morrovalle, IT;
Funari, Antonio, 19 Via San Crispino, 63018 Porto Sant'Elpidio, IT
(72) MACINO, Antonio, 10, Via 1r Maggio, Frazione Guarda di Ro Ferrarese, I-44030 Ferrara, IT
(74) Baldi, Claudio, Ing. Claudio Baldi s.r.l., Viale Cavallotti 13, P.O. Box 187, 60035 Jesi (AN), IT

(51) (8) **EP 2313039 ***
A 61F 13/10
(30) FR 01.08.2008. 0855350
(86) PCT/EP2009059933 31.07.2009.
(96) EP 09781341.4 31.07.2009. En
(87) WO2010012824 04.02.2010. 201005
(97) EP 2313039 27.04.2011. 201117 En
(54) KIT FOR THE TREATMENT OF ONYCHOMYCOSIS
(71) Pierre Fabre Dermo-Cosmétique, 45, place Abel-Gance, 92100 Boulogne-Billancourt, FR
(72) COUBETERGUES, Héla, 6 impasse Jean Cassou, F-31240 Saint-jean, FR;
VOISARD, Jean-Jacques, Empouchoy, F-31380 Montpitol, FR
(74) Ahner, Francis, et al, Cabinet Régimbeau, 20, rue de Chazelles, F-75847 Paris Cedex 17, FR

(51) (8) **EP 2303214 ***
A 61G 17/02
(30) IT 01.08.2008. BS20080025 U
IT 06.03.2009. BS20090006 U
(86) PCT/IT2009000345 30.07.2009.
(96) EP 09787812.8 30.07.2009. It
(87) WO2010013280 04.02.2010. 201005
(97) EP 2303214 06.04.2011. 201114 En
(54) EXTERNAL COVERING FOR COFFINS, SARCOPHAGI, CINERARY URNS AND THE LIKE
(71) Anima Design S.R.L., Piazzetta A. Michelangeli, 1, 25020 Poncarale, Brescia, IT
(72) MALANDRA, Gianluca, Via Papa Giovanni XXIII, 7, 25073 Bovezzo, IT;
MALANDRA,Maria Daniela, Via Bologna, 13, 25073 Bovezzo, IT
(74) Chimini, Francesco, Jacobacci & Partners S.p.A., Piazza della Vittoria 11, 25122 Brescia, IT

(51) (8) **EP 2233120**
A 61H 3/00
A 61H 3/04
(30) CH 26.03.2009. 4752009
(96) EP 10157909.2 26.03.2010. De
(97) EP 2233120 29.09.2010. 201039 De
(54) Walking aid
(71) Ruepp, Thomas, Stockertstrasse 2, 4132 Muttenz, CH
(72) Ruepp, Thomas, Stockertstrasse 2, 4132 Muttenz, CH
(74) Braun, André jr., Braunpat Braun Eder AG, Reussstrasse 22, 4054 Basel, CH

(51) (8) **EP 2306958 ***
A 61H 23/04
(86) PCT/IT2008000454 07.07.2008.
(96) EP 08790043.7 07.07.2008. It
(87) WO2010004592 14.01.2010. 201002
(97) EP 2306958 13.04.2011. 201115 En
(54) DEVICE FOR PNEUMATIC TREATMENT OF AN INFERIOR LIMB HAVING PERIPHERAL ARTERIOPATHY PROBLEMS
(71) London Equitable Limited in its capacity as, Trustee of the Think Tank Trust, 18c Curzon Street, Mayfair, London W1J 7SX, GB
(72) ZAMBONI, Paolo, Via del Gorgo 71, I-44100 Ferrara, IT;
MANFREDINI, Fabio, Via Contrari 27, I-44100 Ferrara, IT
(74) Freyria Fava, Cristina, Buzzi, Notare & Antonielli d'Oulx, Via Maria Vittoria, 18, 10123 Torino, IT

(51) (8) **EP 2071917 ***
A 61J 1/20
(30) IT 29.09.2006. MI20061881
IT 29.03.2007. MI20070635
(86) PCT/IB2007002857 28.09.2007.
(96) EP 07848800.4 28.09.2007. En
(87) WO2008038126 03.04.2008. 200814
(97) EP 2071917 24.06.2009. 200926 En
(54) PACKAGING SYSTEM FOR PHARMACEUTICAL COMPOSITIONS AND KIT FOR INTRAVENOUS ADMINISTRATION
(71) Infa S.A., Via Franscini 10, 6850 Mendrisio, CH
(72) MAGRI', Paolo, c/o INFA S.A., Via Franscini, 10, 6850 Mendrisio, CH;
VILLANI, Flavio, c/o INFA S.A., Via Franscini, 10, 6850 Mendrisio, CH
(74) Trupiano, Federica, et al, Marietti, Gislon e Trupiano S.r.l., Via Larga, 16, 20122 Milano, IT

(51) (8) **EP 2313050 ***
A 61J 3/00
(30) EP 30.07.2008. 08013696
(86) PCT/EP2009005534 30.07.2009.
(96) EP 09777556.3 30.07.2009. En
(87) WO2010012470 04.02.2010. 201005
(97) EP 2313050 27.04.2011. 201117 En
(54) A SYSTEM AND METHOD FOR MANUFACTURING A MEDICATION
(71) Research Center Pharmaceutical Engineering GmbH, Inffeldgasse 21a/II, 8010 Graz, AT
(72) KHINAST, Johannes, Lichtenfelsgasse 21, 8010 Graz, AT;
BRENN, Günter, Waldmüllergasse 13, 8042 Graz, AT;
ZIMMER, Andreas, Rossmanngasse 10, 8010 Graz, AT;
EICHINGER, Rudolf, Wenisbucherstr. 7, 8042 Graz, AT;
BAUER, Wolfgang, Bachweg 9, 8042 Graz, AT
(74) Dilg, Haeusler, Schindelmann, Patentanwaltsgesellschaft mbH, Leonrodstrasse 58, 80636 München, DE

(51) (8) **WO 2010022873**
A 61K 8/04
A 61K 8/42
A 61K 8/65
A 61K 8/73
A 61Q 19/10
(30) DE 01.09.2008. 102008045280

(86) PCT/EP2009005971 18.08.2009.
(96) WO 09777939.1 18.08.2009. En
(87) WO2010022873 04.03.2010. 201009
(97) WO 2010022873 04.03.2010. 201009 En
(54) LIPOSOMAL STRUCTURES FORMING ISOMETRIC AGGLOMERATES, ESPECIALLY BATH BEADS, THE PRODUCTION AND USE THEREOF
(71) Merz Pharma GmbH & Co. KGaA, Eckenheimer Landstrasse 100, 60318 Frankfurt, DE
(72) EBINGER, Jürgen, Schornmühlstrasse 23, 65510 Hünstetten, DE;
BEUTLER, Rolf, Stockwiesenstrasse 28, 64739 Höchst - Hummetroth, DE;
BECKER, Bärbel, Sachsenring 2, 65719 Hofheim, DE
(74) Müller, Claudia, European Patent Attorney, Uhlandstrasse 58, 60314 Frankfurt / Main, DE

(51) (8) **EP 2313054 ***
A 61K 8/04
A 61K 8/06
A 61K 8/19
A 61Q 19/00
A 61K 9/107
A 61K 47/02
(30) DE 30.06.2008. 102008031023
(86) PCT/EP2009003369 12.05.2009.
(96) EP 09772048.6 12.05.2009. De
(87) WO2010000348 07.01.2010. 201001
(97) EP 2313054 27.04.2011. 201117 De
(54) FOAMING SKINCARE CREAM
(71) Neubourg Skin Care GmbH & Co. KG, Mergenthaler Strasse 40, 48268 Greven, DE
(72) NEUBOURG, Thomas, Am Alten Kurbad 16, 59368 Werne, DE
(74) Maiwald, Walter, Maiwald Patentanwalts GmbH, Elisenhof, Elisenstrasse 3, 80335 München, DE

(51) (8) **EP 2317968 ***
A 61K 8/04
A 61K 8/42
A 61K 8/65
A 61K 8/73
A 61Q 19/10
(30) DE 01.09.2008. 102008045280
(86) PCT/EP2009005971 18.08.2009.
(96) EP 09777939.1 18.08.2009. En
(87) WO2010022873 04.03.2010. 201009
(97) EP 2317968 11.05.2011. 201119 En
(54) LIPOSOMAL STRUCTURES FORMING ISOMETRIC AGGLOMERATES, ESPECIALLY BATH BEADS, THE PRODUCTION AND USE THEREOF
(71) Merz Pharma GmbH & Co. KGaA, Eckenheimer Landstrasse 100, 60318 Frankfurt, DE
(72) EBINGER, Jürgen, Schornmühlstrasse 23, 65510 Hünstetten, DE;
BEUTLER, Rolf, Stockwiesenstrasse 28, 64739 Höchst - Hummetroth, DE;
BECKER, Bärbel, Sachsenring 2, 65719 Hofheim, DE
(74) Müller, Claudia, European Patent Attorney, Uhlandstrasse 58, 60314 Frankfurt / Main, DE

(51) (8) **EP 2296612 ***
A 61K 8/19
A 61K 8/25
A 61Q 11/00
A 61P 1/02
A 61K 6/00
(30) EA 07.07.2008. 200801824
(86) PCT/RU2009000012 21.01.2009.
(96) EP 09794702.2 21.01.2009. En
(87) WO2010005338 14.01.2010. 201002
(97) EP 2296612 23.03.2011. 201112 En
(54) THERAPEUTIC AND PROPHYLACTIC FORMULATION FOR ORAL CARE
(71) Obthestvo S Ogranichennoyj Otvetstvennostjyu "WDS", Ul. 1-ya Bukhvostova, 12/11-17/18, Of. 215, Moscow 107258, RU
(72) MANASHEROV, Tamazi Omarovich, Universitetskiyj prospekt 9-75, Moskva 119296, RU;
MATELO, Svetlana Konstantinovna, p.Mechnikovo, Krasnogorsky rayon, Moskovskaya obl. 143422, RU;
KUNIN, Anatoliyj Abramovich, ul.Pyatnickogo d.48 kv.4, Voronezh 394000, RU;
GROSSER, Aleksandr Vladimirovich, ul. Yuzhnaya 1-54, Odintsovo 10, Moskovskaya obl. 143300, RU
(74) Papula Oy, Mechelininkatu 1 a, 00180 Helsinki, FI

(51) (8) **EP 2218439**
A 61K 8/37
A 61K 8/92
A 61Q 1/14
(30) FR 13.02.2009. 0950931
(96) EP 10151790.2 27.01.2010. Fr
(97) EP 2218439 18.08.2010. 201033 Fr
(54) Cleansing gel comprising jojoba oil
(71) L'Oréal, 14, rue Royale, 75008 Paris, FR
(72) Poletti, Mickaël, 58 bis rue de Picpus, 75012, PARIS, FR
(74) Duvert, Sandra, L'Oréal, D.I.P.I., River PLaza, 25-29 Quai Aulagnier, 92600 Asnieres-sur-Seine, FR

(51) (8) **EP 2218440**
A 61K 8/39
A 61K 8/60
A 61Q 19/00
(30) FR 13.02.2009. 0950930
(96) EP 10152370.2 02.02.2010. Fr
(97) EP 2218440 18.08.2010. 201033 Fr
(54) Composition including a sucrose ester and a polyglycerol ester
(71) L'Oréal, 14, rue Royale, 75008 Paris, FR
(72) Poletti, Mickaël, 58 bis rue de Picpus, 75012, PARIS, FR
(74) Duvert, Sandra, L'Oréal, D.I.P.I., River PLaza, 25-29 Quai Aulagnier, 92600 Asnieres-sur-Seine, FR

(51) (8) **EP 2068819 ***
A 61K 8/72
A 61K 31/785
A 61P 3/12
(30) US 01.09.2006. 841566 P
US 05.10.2006. 849434 P
US 23.10.2006. 853440 P
(86) PCT/US2007019201 31.08.2007.
(96) EP 07837624.1 31.08.2007. En
(87) WO2008027551 06.03.2008. 200810

(97) EP 2068819 17.06.2009. 200925 En
(54) DENDRIMER COMPOSITIONS
(71) GENZYME CORPORATION, 500 Kendall Street, Cambridge, MA 02142, US
(72) COOPER, Christopher, 71 Colby Road, Sterling, MA 01564, US;
DHAL, Pradeep, K., 7 Dempsey Way, Westford, MA 01886, US;
GIMI, Rayomand, H., 41 Stonegate Road, Chelmsford, MA 01824, US;
HARRIS, David, J., 5a Eliot Road, Lexington, MA 02421, US;
HOLMES-FARLEY, Stephen, Randall, 20 Norfolk Road, Arlington, MA 02476, US;
HUVAL, Chad, C., 22 Forster Street, Somerville, MA 02145, US;
LEE, Edward, 370 Peakham Road, Sudbury, MA 01776, US
(74) Weber, Martin, et al, Jones Day, Rechtsanwälte Attorneys-at-Law Patentanwälte, Prinzregentenstrasse 11, 80538 München, DE

(51) (8) **EP 2306966 ***
A 61K 8/72
(30) US 06.05.2008. 116006
(86) PCT/US2009002744 04.05.2009.
(96) EP 09743001.1 04.05.2009. En
(87) WO2009137014 12.11.2009. 200946
(97) EP 2306966 13.04.2011. 201115 En
(54) CATIONIC LATEX AS A CARRIER FOR ACTIVE INGREDIENTS AND METHODS FOR MAKING AND USING THE SAME
(71) Mallard Creek Polymers, Inc, 14700 Mallard Creek Road, Charlotte NC 28262, US
(72) KRISHNAN, Venkataram, 104 Penchant Court, Cary, NC 26158, US
(74) Russell, Lindsey, Elkington and Fife LLP, Thavies Inn House, 3-4 Holborn Circus, London EC1N 2HA, GB

(51) (8) **EP 2298276**
A 61K 9/00
A 23L 1/304
A 23L 2/52
A 61K 33/06
A 61K 33/10
A 61K 33/14
A 61K 47/12
(30) JP 17.02.2006. 2006041158
US 17.02.2006. 774374 P
(96) EP 09011120.4 13.02.2007. En
(97) EP 2298276 23.03.2011. 201112 En
(54) Accelerating agent of calcium absorption
(71) Viridis Pharmaceutical Limited, Mill Hall, Suite 6, Wickhams Cay 1, P.O. Box 3085, Road Town Tortola, VG
(72) Matsuda, Hideaki, 14-23 Habikino 4-chome, Habikino-shi, Osaka 5830872, JP;
Iwaki, Masahiro, 574-11 Sanjo-cho, Nara-shi, Nara 6308244, JP;
Kawase, Atsushi, 2-7-28-404, Suwa, Joto-ku, Osaka-shi, Osaka 5360021, JP
(74) Hasler, Erich, et al, Riederer Hasler & Partner, Patentanwälte AG, Kappelestrasse 15, 9492 Eschen, LI

(51) (8) **EP 2299971 ***
A 61K 9/00
A 61K 31/517
A 61P 35/00
A 61K 9/16
A 61K 9/20
(30) EP 06.06.2008. 08157800
EP 14.05.2009. 09160297
(86) PCT/EP2009056944 05.06.2009.
(96) EP 09757619.3 05.06.2009. En
(87) WO2009147238 10.12.2009. 200950
(97) EP 2299971 30.03.2011. 201113 En
(54) SOLID PHARMACEUTICAL FORMULATIONS COMPRISING BIBW 2992
(71) Boehringer Ingelheim International GmbH, Binger Straße 173, 55216 Ingelheim am Rhein, DE
(72) MESSERSCHMID, Roman, Boehringer Ingelheim GmbH, CD Patents, Binger Str. 173, 55216 Ingelheim Am Rhein, DE;
FRIEDL, Thomas, Boehringer Ingelheim GmbH, CD Patents, Binger Str. 173, 55216 IngelheimAm Rhein, DE
(74) Hammann, Heinz, et al, Boehringer Ingelheim Pharma GmbH, CD-Patents, Binger Straße 173, 55216 Ingelheim am Rhein, DE

(51) (8) **EP 2306972 ***
A 61K 9/00
A 61K 47/12
A 61F 13/00
A 61L 2/00
A 61K 9/08
(30) EP 23.06.2008. 08158755
US 23.06.2008. 74804 P
(86) PCT/DK2009050141 23.06.2009.
(96) EP 09768853.5 23.06.2009. En
(87) WO2009155931 30.12.2009. 200953
(97) EP 2306972 13.04.2011. 201115 En
(54) ACETIC ACID AND A BUFFER
(71) Danmarks Tekniske Universitet, Anker Engelundsvej 1, 101A, 2800 Kgs. Lyngby, DK;
Bispebjerg Hospital, Bispebjerg Bakka 23, 2400 Copenhagen NV, DK;
Rigshospitalet, Copenhagen University Hospital, Blegdamsvej 9, 2100 CopenhagenØ, DK
(72) GIVSKOV, Michael Christian, Boserupvej 206, DK-3050 Humlebæk, DK;
BJARNSHOLT, Thomas, Wergelands Alle 31, DK-2860 Søborg, DK;
HOMØE, Preben, Zgade 9, DK-4600 Køge, DK;
HØIBY, Niels, Skovbakken 50, DK-3520 Farum, DK;
JENSEN, Peter Østrup, Ørestads Boulevard 59A, 7, 0704, DK-2300 Copenhagen S, DK;
JOHANSEN, Helle Krogh, Kløvervang 39, DK-2970 Hørsholm, DK;
KIRKETERP-MØLLER, Klaus, Langesvej 21, DK-4600 Køge, DK
(74) Plougmann & Vingtoft A/S, Sundkrogsgade 9, P.O. Box 831, 2100 CopenhagenØ, DK

(51) (8) **EP 2315580 ***
A 61K 9/00
A 61K 47/02
A 61K 47/12
(30) US 26.03.2009. 163772 P
US 26.03.2009. 163763 P
US 26.03.2009. 163767 P
US 28.10.2009. 255764 P
US 25.01.2010. 298092 P
US 18.02.2010. 305819 P
(86) PCT/US2010028906 26.03.2010.
(96) EP 10711127.0 26.03.2010. En
(87) WO2010111644 30.09.2010. 201039
(97) EP 2315580 04.05.2011. 201118 En
(54) PHARMACEUTICAL FORMULATIONS AND METHODS FOR TREATING RESPIRATORY TRACT INFECTIONS
(71) Pulmatrix, Inc., 99 Hayden Avenue, Lexington, MA 02421, US
(72) LIPP, Michael M., 45A Flanagan Drive, Framingham, Massachusetts 01701, US;
CLARKE, Robert W., 60 Kings Road, Canton, Massachusetts 02021, US;
HAVA, David L., 68 S. Main Street, 2, Natick, Massachusetts 01760, US;
BATYCKY, Richard, 19 Bernard Street, Newton, Massachusetts 02461, US;
HANRAHAN, John, 69 Grayfield Avenue, West Roxbury, Massachusetts 02132-2316, US
(74) Lock, Graham James, et al, Fry Heath & Spence LLP, The Gables, Massetts Road, Horley, Surrey RH6 7DQ, GB

(51) (8) **EP 2320870 ***
A 61K 9/00
(30) IT 07.08.2008. RM20080444
(86) PCT/IT2009000371 06.08.2009.
(96) EP 09787835.9 06.08.2009. It
(87) WO2010016088 11.02.2010. 201006
(97) EP 2320870 18.05.2011. 201120 En
(54) TOPICAL INTRANASAL COMPOSITION USABLE IN THE CASE OF NASAL OBSTRUCTION
(71) D.M.G. Italia Srl, Via Laurentina Km 26,700, 00040 Pomezia (RM), IT
(72) MERCURI, Luigi, Via Laurentina Km. 26, 700, I-00040 Pomezia (RM), IT
(74) Sarpi, Maurizio, et al, Studio Ferrario srl, Via Collina 36, I-00187 Roma, IT

(51) (8) **EP 2320871 ***
A 61K 9/00
(30) US 12.08.2008. 88314 P
(86) PCT/US2009004607 12.08.2009.
(96) EP 09806962.8 12.08.2009. En
(87) WO2010019226 18.02.2010. 201007
(97) EP 2320871 18.05.2011. 201120 En
(54) INTRAVAGINAL DEVICES WITH A RIGID SUPPORT, METHODS OF MAKING, AND USES THEREOF
(71) Teva Women's Health, Inc., 400 Chestnut Ridge Road, Woodcliff Lake, NJ 07677, US
(72) AHMED, Salah, U., 42 Roberts Road, New City, NY 10956, US;
TSAO, Jiaxiang, 4 Morgan Ct., Nanuet, NY 10954, US
(74) Clarke, Lionel Paul, et al, Gill Jennings & Every LLP, The Broadgate Tower, 20 Primrose Street, London EC2A 2ES, GB

(51) (8) **EP 2303227 ***
A 61K 9/06
A 61P 27/16
A 61K 9/14
A 61K 9/16
A 61K 31/573
A 61K 47/34
(30) US 14.05.2008. 127713 P
US 10.06.2008. 60425 P
US 20.06.2008. 74583 P
US 21.07.2008. 82450 P
US 11.08.2008. 87940 P
US 04.09.2008. 94384 P
US 08.09.2008. 95248 P
US 29.09.2008. 101112 P
US 22.12.2008. 140033 P
GB 22.12.2008. 0823378
(86) PCT/US2009003066 14.05.2009.
(96) EP 09747010.8 14.05.2009. En
(87) WO2009139924 19.11.2009. 200947
(97) EP 2303227 06.04.2011. 201114 En
(54) CONTROLLED RELEASE CORTICOSTEROID COMPOSITIONS AND METHODS FOR THE TREATMENT OF OTIC DISORDERS
(71) Otonomy, Inc., 5626 Oberlin Drive, Suite 100, San Diego, CA 92121, US;
The Regents of the University of California, 1111 Franklin Street, 12th Floor, Oakland, CA 94607, US
(72) LICHTER, Jay, P.O. Box 676244, Rancho Santa Fe, California 92067, US;
VOLLRATH, Benedikt, 4704 Niagara Avenue, San Diego, California 92107, US;
TRAMMEL, Andrew M., 12485 South Alden Circle, Olathe, Kansas 66062, US;
DURÓN, Sergio G., 1615 Neale St., San Diego, California 92103, US;
PIU, Fabrice, 11859 Stonedale Ct., San Diego, California 92131, US;
DELLAMARY, Luis A., 829 Quiet Hills Dr, San Marcos, California 92069, US;
YE, Qiang, 7395 Mannix Court, San Diego, California 92129, US;
LEBEL, Carl, 23256 Mariposa de Oro St., Malibu, California 90265, US;
SCAIFE, Michael Christopher, 60 Marvin Avenue, Los Altos, California 94022, US;
HARRIS, Jeffrey P., 7717 Sierra Mar Drive, La Jolla, California 92037, US
(74) Sahans, Sarah Anne, et al, HLBBshaw, HLBBshaw Ltd, Merlin House, Falconry Court, Baker's Lane, Epping, Essex CM16 5DQ, GB

(51) (8) **EP 2306975 ***
A 61K 9/06
A 61P 27/16
A 61K 31/045
A 61K 9/16
A 61K 47/34
(30) US 21.07.2008. 82450 P

US 22.08.2008. 91205 P
US 22.08.2008. 91200 P
US 04.09.2008. 94384 P
US 29.09.2008. 101112 P
US 27.10.2008. 108845 P
US 22.12.2008. 140033 P
US 02.03.2009. 156771 P
(86) PCT/US2009051165 20.07.2009.
(96) EP 09800849.3 20.07.2009. En
(87) WO2010011605 28.01.2010. 201004
(97) EP 2306975 13.04.2011. 201115 En
(54) CONTROLLED-RELEASE OTIC STRUCTURE MODULATING AND INNATE IMMUNE SYSTEM MODULATING COMPOSITIONS AND METHODS FOR THE TREATMENT OF OTIC DISORDERS
(71) Otonomy, Inc., 5626 Oberlin Drive, Suite 100, San Diego, CA 92121, US;
The Regents of the University of California, 1111 Franklin Street, 12th Floor, Oakland, CA 94607, US
(72) LICHTER, Jay, P.O. Box 676244, Rancho Santa Fe, CA 92067, US;
VOLLRATH, Benedikt, 4704 Niagara Avenue, San Diego, CA 92107, US;
TRAMMEL, Andrew, M., 12485 South Alden Circle, Olathe, KS 66062, US;
DURÓN, Sergio, G., 1605 Neale Street, San Diego, CA 92103, US;
PIU, Fabrice, 11859 Stonedale Ct., San Diego, CA 92131, US;
DELLAMARY, Luis, A., 829 Quiet Hills DR., San Marcos, CA 92069, US;
YE, Qiang, 7395 Mannix Court, San Diego, CA 92129, US;
LEBEL, Carl, 23256 Mariposa de Oro St., Malibu, CA 90265, US;
SCAIFE, Michael, Christopher, 60 Marvin Avenue, Los Altos, CA 94022, US;
HARRIS, Jeffrey, P., 7717 Sierra Mar Drive, La Jolla, CA 92037, US
(74) Sahans, Sarah Anne, et al, HLBBshaw, Merlin House, Falconry Court, Baker's Lane, GB-Epping, Essex CM16 5DQ, GB

(51) (8) **EP 2315581 ***
A 61K 9/06
A 61K 31/196
A 61K 31/513
A 61K 31/60
A 61P 17/12
(30) EP 07.07.2008. 08012237
(86) PCT/EP2009004682 29.06.2009.
(96) EP 09776876.6 29.06.2009. En
(87) WO2010003568 14.01.2010. 201002
(97) EP 2315581 04.05.2011. 201118 En
(54) TOPICAL COMPOSITION FOR THE TREATMENT OF ACTINIC KERATOSIS
(71) Almirall Hermal GmbH, Scholtzstrasse 3, 21465 Reinbek, DE
(72) MELZER, Manfred, Gartenstrasse 48, 21465 Reinback, DE;
MATTHIES, Carmen, Tannenweg 12, 21516 Woltersdorf, DE;
TREUDLER, Klaus, Auf dem Kamp 36, 21217 Seevetal, DE;
WILLERS, Christoph, Stratenbarg 32, 22393 Hamburg, DE;
MALLWITZ, Henning, Falkenweg 9c, 21244 Buchholz/N., DE
(74) UEXKÜLL & STOLBERG, Patentanwälte, Beselerstrasse 4, 22607 Hamburg, DE

(51) (8) **EP 2298281**
A 61K 9/08
A 61K 31/198
A 61P 25/16
(30) SE 12.07.2004. 0401842
(96) EP 10181105.7 08.07.2005. En
(97) EP 2298281 23.03.2011. 201112 En
(54) Infusion and injection solution of Levodopa
(71) Dizlin Medical Design AB, Box 210, 593 25 Västervik, SE
(72) Dizdar Segrell, Nil, Fasangatan 52, 582 37, Linköping, SE
(74) Nikolopoulou, Sofia, Albihns.Zacco AB, Patent Department, P.O. Box 5581, 114 85 Stockholm, SE

(51) (8) **EP 2303229 ***
A 61K 9/08
A 61K 47/36
A 61K 47/40
A 61K 31/282
(30) WO 16.06.2008. PCT/IB2008/001563
(86) PCT/IB2009052451 09.06.2009.
(96) EP 09766241.5 09.06.2009. En
(87) WO2009153704 23.12.2009. 200952
(97) EP 2303229 06.04.2011. 201114 En
(54) CONCENTRATED OXALIPLATIN SOLUTION AND ITS METHOD OF PREPARATION
(71) Debiopharm S.A., Chemin Messidor 5-7, 1002 Lausanne, CH
(72) MARX, Uwe, Rue de la Plantzette 26, CH-3960 Sierre, CH;
THORENS, Julien, 105 Sur Bondet, F-74350 St Blaise, FR;
BERNARD, Stéphane, 13 Impasse des Tilleuls, F-01170 Cessy, FR
(74) Grosfillier, Philippe, Andre Roland S.A., Avenue Tissot 15, P.O. Box 1255, 1001 Lausanne, CH

(51) (8) **EP 2306977 ***
A 61K 9/08
A 61K 47/10
A 61K 47/26
A 61K 47/18
A 61K 31/5575
(30) EP 30.05.2008. 08397513
(86) PCT/JP2009060211 28.05.2009.
(96) EP 09754864.8 28.05.2009. En
(87) WO2009145356 03.12.2009. 200949
(97) EP 2306977 13.04.2011. 201115 En
(54) METHOD AND COMPOSITION FOR TREATING OCULAR HYPERTENSION AND GLAUCOMA
(71) Santen Pharmaceutical Co., Ltd, 9-19, Shimoshinjo 3-chome, Higashiyodogawa-ku, Osaka-shi, Osaka 533-8651, JP;
Asahi Glass Co., Ltd., 1-12-1, Yurakucho, Chiyoda-ku, Tokyo 100-8405, JP
(72) REUNAMAKI, Timo, Jakalakatu 4, FI-33820 Tampere, FI;
PELLINEN, Pertti, Simunantie 12C7, FI-33880 Lempaala, FI;
OKSALA, Olli, Hirvikatu 24 E 20, FI-33240 Tampere, FI;
LEHMUSSAARI, Kari, Silakatu 3, FI-33580 Tampere, FI
(74) Matilainen, Mirja Helena, Oy Jalo Ant-Wuorinen AB, Iso Roobertinkatu 4-6 A, 00120 Helsinki, FI

(51) (8) **EP 2309983 ***
A 61K 9/08
A 61K 31/519
A 61P 3/00
(30) AT 12.08.2008. 12542008
(86) PCT/AT2009000306 07.08.2009.
(96) EP 09775591.2 07.08.2009. De
(87) WO2010017570 18.02.2010. 201007
(97) EP 2309983 20.04.2011. 201116 De
(54) PHARMACEUTICAL FORM COMPRISING TETRAHYDROBIOPTERIN
(71) Orpha Swiss GmbH, Untere Heslibachstrasse 41a, 8700 Küsnacht, CH
(72) WIDMANN, Rudolf, Wintergasse 85/1B, A-3002 Purkersdorf, AT;
BERNKOP-SCHNUERCH, Andreas, Unterer Platz 22, A-9300 St. Veit/Glan, AT
(74) Nemec, Harald, et al, Schwarz & Partner, Patentanwälte, Wipplingerstrasse 30, 1010 Wien, AT

(51) (8) **EP 2299976 ***
A 61K 9/127
A 61K 9/16
A 61K 47/34
A 61P 27/16
(30) US 22.12.2008. 140033 P
US 13.03.2009. 160233 P
US 30.03.2009. 164812 P
GB 24.04.2009. 0907070
US 30.04.2009. 174421 P
US 16.07.2009. 504553
(86) PCT/US2009067552 10.12.2009.
(96) EP 09835529.0 10.12.2009. En
(87) WO2010074992 01.07.2010. 201026
(97) EP 2299976 30.03.2011. 201113 En
(54) CONTROLLED RELEASE AURIS SENSORY CELL MODULATOR COMPOSITIONS AND METHODS FOR THE TREATMENT OF OTIC DISORDERS
(71) Otonomy, Inc., 5626 Oberlin Drive, Suite 100, San Diego, CA 92121, US;
The Regents of the University of California, 1111 Franklin Street, 12th Floor, Oakland, CA 94607, US
(72) LICHTER, Jay, P.O. Box 676244, Rancho Santa Fe, California 92067, US;
VOLLRATH, Benedikt, 4704 Niagara Avenue, San Diego, California 92107, US;
TRAMMEL, Andrew, M., 12485 South Alden Circle, Olathe, Kansas 66062, US;
DURÓN, Sergio, G., 1605 Neale Street, San Diego, California 92103, US;
PIU, Fabrice, 11859 Stonedale Ct., San Diego, California 92131, US;
DELLAMARY, Luis, A., 829 Quiet Hills Dr, San Marcos, California 92069, US;
YE, Qiang, 7395 Mannix Court, San Diego, California 92129, US;
LEBEL, Carl, 23256 Mariposa de Oro St., Malibu, California 90265, US;
SCAIFE, Michael, Christopher, 60 Marvin Avenue, Los Altos, California 94022, US;
HARRIS, Jeffrey, P., 7717 Sierra Mar Drive, La Jolla, California 92037, US
(74) Sahans, Sarah Anne, et al, HLBBshaw, Merlin House, Falconry Court, Baker's Lane, Epping, Essex CM16 5DQ, GB

(51) (8) **EP 2309985 ***
A 61K 9/14
A 61K 9/16
A 61K 9/20
A 61K 9/48
A 61K 47/12
A 61K 47/36
A 61K 47/38
(30) JP 28.07.2008. 2008194219
(86) PCT/JP2009063708 27.07.2009.
(96) EP 09788013.2 27.07.2009. En
(87) WO2010013823 04.02.2010. 201005
(97) EP 2309985 20.04.2011. 201116 En
(54) PHARMACEUTICAL COMPOSITION
(71) Takeda Pharmaceutical Company Limited, 1-1 Doshomachi 4-chome, Chuo-ku, Osaka-shi, Osaka 541-0045, JP
(72) HIRAISHI, Yasuhiro, c/o Takeda Pharmaceutical Company Limited, 17-85, Jusohonmachi 2-chome, Yodogawa-ku, Osaka-shi, Osaka 532-8686, JP;
NONOMURA, Muneo, c/o TAKEDA PHARMACEUTICAL COMPANY LIMITED, 17-85 Jusohonmachi 2-chome, Yodogawa-ku, Osaka-shi, Osaka 532-8686, JP
(74) Jones, Nicholas Andrew, et al, Withers & Rogers LLP, Goldings House, 2 Hays Lane, London, SE1 2HW, GB

(51) (8) **EP 2296632 ***
A 61K 9/16
A 61P 27/16
A 61K 38/22
A 61K 38/48
(30) US 14.07.2008. 80583 P
US 21.07.2008. 82450 P
US 04.09.2008. 94384 P
US 29.09.2008. 101112 P
US 31.10.2008. 110511 P
US 22.12.2008. 140033 P
US 30.03.2009. 164841 P
GB 24.04.2009. 0907065
(86) PCT/US2009050077 09.07.2009.
(96) EP 09798587.3 09.07.2009. En
(87) WO2010008995 21.01.2010. 201003
(97) EP 2296632 23.03.2011. 201112 En
(54) CONTROLLED-RELEASE APOPTOSIS MODULATING COMPOSITIONS AND METHODS FOR THE TREATMENT OF OTIC DISORDERS
(71) Otonomy, Inc., 5626 Oberlin Drive, Suite 100, San Diego, CA 92121, US;
The Regents of the University of California, 1111 Franklin Street, 12th Floor, Oakland, CA 94607, US
(72) LICHTER, Jay, P.O. Box 676244, Rancho Santa Fe, CA 92067, US;
VOLLRATH, Benedikt, 4704 Niagara Avenue, San Diego, CA 92107, US;
TRAMMEL, Andrew, M., 12485 South Alden Circle, Olathe, KS 66062, US;
DURÓN, Sergio, G., 1605 Neale Street, San Diego, CA 92103, US;
PIU, Fabrice, 11859 Stonedale Ct., San Diego, CA 92131, US;

DELLAMARY, Luis, A., 829 Quiet Hills Dr, San Marcos, CA 92069, US;
YE, Qiang, 7395 Mannix Court, San Diego, CA 92129, US;
LEBEL, Carl, 23256 Mariposa De Oro St., Malibu, CA 90265, US;
SCAIFE, Michael, Christopher, 60 Marvin Avenue, Los Altos, CA 94022, US;
HARRIS, Jeffrey, P., 7717 Sierra Mar Drive, La Jolla, CA 92037, US
(74) Sahans, Sarah Anne, et al, HLBBshaw, Merlin House, Falconry Court, Baker's Lane, Epping, Essex CM16 5DQ, GB

(51) (8) **EP 2299979 ***
A 61K 9/16
A 61P 31/04
A 61P 27/16
A 61K 47/34
A 61K 9/14
(30) US 21.07.2008. 82450 P
US 25.07.2008. 83871 P
US 04.09.2008. 94384 P
US 29.09.2008. 101112 P
US 22.12.2008. 140033 P
US 21.04.2009. 427663
US 14.05.2009. 466310
(86) PCT/US2009051172 20.07.2009.
(96) EP 09800852.7 20.07.2009. En
(87) WO2010011609 28.01.2010. 201004
(97) EP 2299979 30.03.2011. 201113 En
(54) CONTROLLED RELEASE ANTIMICROBIAL COMPOSITIONS AND METHODS FOR THE TREATMENT OF OTIC DISORDERS
(71) Otonomy, Inc., 5626 Oberlin Drive, Suite 100, San Diego, CA 92121, US;
The Regents of the University of California, 1111 Franklin Street, 12th Floor, Oakland, CA 94607, US
(72) LICHTER, Jay, P.O. Box 676244, RanchoSanta Fe, CA 92067, US;
VOLLRATH, Benedikt, 4704 Niagara Avenue, San Diego, CA 92107, US;
TRAMMEL, Andrew, M., 12485 South Alden Circle, Olathe, KS 66062, US;
DURÓN, Sergio, G., 1605 Neale Street, San Diego, CA 92103, US;
PIU, Fabrice, 11859 Stonedale Ct., San Diego, CA 92131, US;
DELLAMARY, Luis, A., 829 Quiet HillsDr, San Marcos, CA 92069, US;
YE, Qiang, 7395 Mannix Court, San Diego, CA 92129, US;
LEBEL, Carl, 23256 Mariposa De Oro St., Malibu, CA 90265, US;
SCAIFE, Michael, Christopher, 60 Marvin Avenue, Los Altos, CA 94022, US;
HARRIS, Jeffrey, P., 7717 Sierra Mar Drive, La Jolla, CA 92037, US
(74) Sahans, Sarah Anne, et al, HLBBshaw, HLBBshaw Ltd, Merlin House, Falconry Court, Baker's Lane, Epping, Essex CM16 5DQ, GB

(51) (8) **EP 2303233 ***
A 61K 9/16
A 61K 47/12
A 61K 9/20
A 61K 9/28
A 61K 9/26
A 61K 9/48
A 61K 31/4365
(86) PCT/EP2008006133 25.07.2008.
(96) EP 08785086.3 25.07.2008. En
(87) WO2010009745 28.01.2010. 201004
(97) EP 2303233 06.04.2011. 201114 En
(54) SOLID ORAL DOSAGE FORM CONTAINING ANTI-PLATELET AGENT CLOPIDOGREL AND METHOD FOR THE PREPARATION THEREOF
(71) Pharmathen S.A., 6, Dervenakion str., 15351 Pallini Attikis, GR
(72) KOUTRIS, Efthimios, 6 Dervenakion Street, GR-153 51 Pallini Attikis, GR;
SAMARA, Vicky, 6 Dervenakion Street, GR-153 51 Pallini Attikis, GR;
KOUTRI, Ioanna, 6 Dervenakion Str., GR-153 51 Pallini Attikis, GR;
ILIOPOULOU, Athina, 6 Dervenakion Str., GR-15351 Pallini Attikis, GR;
BIKIARIS, Dimitrios, 13 Menandrou Str., GR-543 51 Thessaloniki, GR

(51) (8) **EP 2309989 ***
A 61K 9/16
A 61K 47/34
A 61K 33/24
A 61K 31/337
(30) US 15.04.2009. 169541
US 16.06.2008. 61704
US 16.06.2008. 61760
US 04.05.2009. 175219
US 04.05.2009. 175226
US 29.04.2009. 173790
US 15.04.2009. 169519
US 29.05.2009. 182300
US 12.08.2008. 88159
US 04.05.2009. 175209
US 20.10.2008. 106777
US 16.10.2008. 105916
US 16.06.2008. 61697 P
US 15.04.2009. 169514
US 29.04.2009. 173784
(86) PCT/US2009047513 16.06.2009.
(96) EP 09794913.5 16.06.2009. En
(87) WO2010005721 14.01.2010. 201002
(97) EP 2309989 20.04.2011. 201116 En
(54) DRUG LOADED POLYMERIC NANOPARTICLES AND METHODS OF MAKING AND USING SAME
(71) Bind Biosciences, Inc., 64 Sidney Street, Cambridge, MA 02139, US
(72) ZALE, Stephen, E., One Norcross Road, Hopkinton, MA 01748, US;
TROIANO, Greg, 38 Lily's Way, Pembroke, MA 02359, US;
ALI, Mir Mukkaram, 53 Cedar Street Apt. 3205, Woburn, MA 01801, US;
HRKACH, Jeff, 21 Washington Street, Lexington, MA 02421, US;

WRIGHT, James, 24 Bloomfield Street, Lexington, MA 02421, US
(74) Harris, Jennifer Lucy, et al, Kilburn & Strode LLP, 20 Red Lion Street, London WC1R 4PJ, GB

(51) (8) **EP 2309990 ***
A 61K 9/16
A 61K 47/16
A 61K 47/34
A 61K 31/337
(30) US 15.04.2009. 169519
US 29.05.2009. 182300
US 16.06.2008. 61704
US 15.04.2009. 169541
US 04.05.2009. 175219
US 16.06.2008. 61760
US 04.05.2009. 175226
US 20.10.2008. 106777
US 16.10.2008. 105916
US 04.05.2009. 175209
US 12.08.2008. 88159
US 29.04.2009. 173784 P
US 16.06.2008. 61697
US 15.04.2009. 169514
US 29.04.2009. 173790
(86) PCT/US2009047515 16.06.2009.
(96) EP 09794915.0 16.06.2009. En
(87) WO2010005723 14.01.2010. 201002
(97) EP 2309990 20.04.2011. 201116 En
(54) DRUG LOADED POLYMERIC NANOPARTICLES AND METHODS OF MAKING AND USING SAME
(71) Bind Biosciences, Inc., 64 Sidney Street, Cambridge, MA 02139, US
(72) TROIANO, Greg, 38 Lily's Way, Pembroke, MA 02359, US;
FIGA, Michael, 76 Quint Avenue, Allston, MA 02134, US;
SABNIS, Abhimanyu, 48 Brooks Avenue, Arlington, MA 02474, US
(74) Harris, Jennifer Lucy, et al, Kilburn & Strode LLP, 20 Red Lion Street, London WC1R 4PJ, GB

(51) (8) **EP 2309991 ***
A 61K 9/16
A 61K 31/475
A 61K 47/34
A 61P 35/00
(30) US 15.04.2009. 169514
US 04.05.2009. 175219
US 15.04.2009. 169519
US 15.04.2009. 169541
US 29.05.2009. 182300
US 16.06.2008. 61704
US 29.04.2009. 173784
US 04.05.2009. 175226
US 16.10.2008. 105916
US 12.08.2008. 88159
US 20.10.2008. 106777
US 16.06.2008. 61760
US 04.05.2009. 175209
US 16.06.2008. 61697 P
(86) PCT/US2009047517 16.06.2009.
(96) EP 09794917.6 16.06.2009. En
(87) WO2010005725 14.01.2010. 201002
(97) EP 2309991 20.04.2011. 201116 En
(54) THERAPEUTIC POLYMERIC NANOPARTICLES COMPRISING VINCA ALKALOIDS AND METHODS OF MAKING AND USING SAME
(71) Bind Biosciences, Inc., 64 Sidney Street, Cambridge, MA 02139, US
(72) ZALE, Stephen, E., One Norcross Road, Hopkinton, MA 01748, US;
TROIANO, Greg, 38 Lily's Way, Pembroke, MA 02359, US;
ALI, Mir Mukkaram, 53 Cedar Street, apt. 3205, Woburn, MA 01801, US;
HRKACH, Jeff, 21 Washington Street, Lexington, MA 02421, US;
WRIGHT, James, 24 Bloomfield Street, Lexingonton, MA 02421, US
(74) Harris, Jennifer Lucy, et al, Kilburn & Strode LLP, 20 Red Lion Street, London WC1R 4PJ, GB

(51) (8) **EP 2317979 ***
A 61K 9/16
A 61K 38/22
A 61P 5/06
(30) GB 11.07.2008. 0812740
(86) PCT/GB2009001727 10.07.2009.
(96) EP 09784686.9 10.07.2009. En
(87) WO2010004299 14.01.2010. 201002
(97) EP 2317979 11.05.2011. 201119 En
(54) PHARMACEUTICAL COMPOSITIONS OF SOMATOTROPHIC HORMONES
(71) Critical Pharmaceuticals Limited, BioCity Nottingham, Pennyfoot Street, Nottingham NG1 1 GF, GB
(72) NAYLOR, Andrew, Critical Pharmaceuticals Limited, BioCity Nottingham, Pennyfoot Street, Nottingham NG1 1GF, GB;
LEWIS, Andrew, Lester, Critical Pharmaceuticals Limited, BioCity Nottingham, Pennyfoot Street, Nottingham NG1 1GF, GB;
ILLUM, Lisbeth, c/o Critical Pharmaceuticals Limited, BioCity Nottingham, Pennyfoot Street, Nottingham NG1 1GF, GB
(74) Snodin, Michael D., et al, Potter Clarkson LLP, Park View House, 58 The Ropewalk, GB-Nottingham NG1 5DD, GB

(51) (8) **EP 2317984 ***
A 61K 9/16
A 61K 47/44
A 61K 8/92
A 61K 9/00
A 61L 15/22
A 61L 15/34
A 61L 15/42
A 61M 37/00
A 61P 17/00
A 61Q 19/00
D 06M 16/00
A 41D 19/00
(30) US 18.07.2008. 81911
(86) PCT/CA2009001012 17.07.2009.
(96) EP 09797326.7 17.07.2009. En
(87) WO2010006442 21.01.2010. 201003
(97) EP 2317984 11.05.2011. 201119 En

(54) ARTICLES OF MANUFACTURE RELEASING AN ACTIVE INGREDIENT
(71) Biomod Concepts Inc., 75 Boulevard De Montagne, C.P. 119, Boucherville, QC J4B 6Y4, CA
(72) THEBERGE, Karine, 6695 rue de la Bataille, La Prairie, Québec J5R 3X8, CA;
GOUDREAULT, lsabelle, 1706 rue Guilford, Montreal, Quebec H2J 1S5, CA;
QUIRION, François, 4741 rue Rivard, Montreal, Quebec H2J 2N5, CA;
PERRON, Gérald, 782 Boul St-Louis 5, Boucherville, Quebec J4B 1T4, CA
(74) Cabinet Plasseraud, 52, rue de la Victoire, 75440 Paris Cedex 09, FR

(51) (8) **EP 2319499**
A 61K 9/16
A 61K 9/20
(30) GB 28.01.2005. 0501638
WO 11.02.2005. PCT/GB2005/050014
US 12.04.2005. 670506 P
US 26.10.2005. 730339 P
(96) EP 10180425.0 27.01.2006. En
(97) EP 2319499 11.05.2011. 201119 En
(54) Alcohol resistant dosage forms
(71) EURO-CELTIQUE S.A., 2, avenue Charles de Gaulle, 1653 Luxembourg, LU
(72) Mannion, Richard, O., 3860 Green Ridge Road, Furlong, PA 18925, US;
Mckenna William, H., 10 Long Meadow Road, Yonkers, NY 10704, US;
O'Donnell, Edward, P., 38 Chestnut Court, Basking Ridge, NJ 07920, US;
Danagher, Helen, Kathleen, c/o Mundipharma Research Limited, Cambridge Science Park, Milton Road, Cambridge, Cambridgeshire CB4 0GW, GB;
Hayes, Geoffrey, Gerard, c/o Mundipharma Research Limited, Cambridge Science Park, Milton Road, Cambridge, Cambridgeshire CB4 0GW, GB;
Mohammad, Hassan, c/o Mundipharma Research Limited, Cambridge Science Park, Milton Road, Cambridge, Cambridgeshire CB4 0GW, GB;
Prater, Derek, Allan, c/o Mundipharma Research Limited, Cambridge Science Park, Milton Road, Cambridge, Cambridgeshire CB4 0GW, GB;
Tamber, Harjit, c/o Mundipharma Research Limited, Cambridge Science Park, Milton Road, Cambridge, Cambridgeshire CB4 0GW, GB;
Walden, Malcolm, c/o Mundipharma Research Limited, Cambridge Science Park, Milton Road, Cambridge, Cambridgeshire CB4 0GW, GB;
Whitelock, Steve, c/o Mundipharma Research Limited, Cambridge Science Park, Milton Road, Cambridge, Cambridgeshire CB4 0GW, GB;
Fleischer, Wolfgang, Posener Strasse 6, 55218, Ingelheim, DE;
Hahn, Udo, Nordstrasse 1, 56412, Nentershausen, DE;
Spitzley, Christof, Am Linsengraben 2, 65627, Elbgrund, DE;
Leuner, Christian, Blauwiesenweg 65, 60439, Frankfurt, DE
(74) Glas, Holger, Maiwald Patentanwalts GmbH, Elisenhof, Elisenstrasse 3, 80335 München, DE

(51) (8) **EP 2320872 ***
A 61K 9/16
A 61K 47/14
(30) GB 11.07.2008. 0812742
(86) PCT/GB2009001711 10.07.2009.
(96) EP 09784672.9 10.07.2009. En
(87) WO2010004287 14.01.2010. 201002
(97) EP 2320872 18.05.2011. 201120 En
(54) PROCESS FOR PREPARING MICROPARTICLES
(71) Critical Pharmaceuticals Limited, BioCity Nottingham, Pennyfoot Street, Nottingham NG1 1 GF, GB
(72) NAYLOR, Andrew, Critical Pharmaceuticals Limited, BioCity Nottingham, Pennyfoot Street, Nottingham NG1 1GF, GB;
LEWIS, Andrew, Lester, Critical Pharmaceuticals Limited, BioCity Nottingham, Pennyfoot Street, Nottingham NG1 1GF, GB;
ILLUM, Lisbeth, Critical Pharmaceuticals Limited, BioCity Nottingham, Pennyfoot Street, Nottingham NG1 1GF, GB
(74) Snodin, Michael D., et al, Potter Clarkson LLP, Park View House, 58 The Ropewalk, Nottingham, NG1 5DD, GB

(51) (8) **EP 2299983 ***
A 61K 9/20
A 61K 9/22
A 61K 9/52
(30) US 24.07.2008. 83270
(86) PCT/US2008075333 05.09.2008.
(96) EP 08799205.3 05.09.2008. En
(87) WO2010011232 28.01.2010. 201004
(97) EP 2299983 30.03.2011. 201113 En
(54) STABILIZED ATYPICAL ANTIPSYCHOTIC FORMULATION
(71) Handa Pharmaceuticals, Llc, 39465 Paseo Padre Parkway, Suite 2600, Fremont, CA 94538, US
(72) LIU, Fang-yu, 30209 Aragon Place, Union City, CA 94587, US;
SHEN, Zhi-qun, Room 1-502, Building No.21, Shihuiqiao Xincun, Xihu District, Hangzhou, CN
(74) Schlich, George William, Schlich & Co, 34 New Road, Littlehampton, West Sussex BN17 5AT, GB

(51) (8) **EP 2303238 ***
A 61K 9/20
A 61K 31/00
(30) US 30.06.2008. 133542 P
(86) PCT/US2009049009 29.06.2009.
(96) EP 09774214.2 29.06.2009. En
(87) WO2010002763 07.01.2010. 201001
(97) EP 2303238 06.04.2011. 201114 En
(54) SOLID DOSAGE FORMULATIONS OF TELCAGEPANT POTASSIUM
(71) Merck Sharp & Dohme Corp., 126 East Lincoln Avenue, Rahway, NJ 07065-0907, US
(72) MAHJOUR, Majid, 126 East Lincoln Avenue, Rahway, NJ 07065-0907, US;
ZHANG, Dan, 126 East Lincoln Avenue, Rahway, NJ 07065-0907, US;
MOMENT, Aaron, J., 126 East Lincoln Avenue, Rahway, NJ 07065-0907, US
(74) Buchan, Gavin MacNicol, et al, Merck & Co., Inc., European Patent Department, Hertford Road, Hoddesdon, Hertfordshire EN11 9BU, GB

(51) (8) **EP 2306985** *
A 61K 9/20
A 61K 38/17
A 61L 27/22
C 07D 487/04
(30) US 16.06.2008. 132429 P
US 02.03.2009. 209056 P
GB 31.03.2009. 0905567
(86) PCT/US2009003632 16.06.2009.
(96) EP 09788803.6 16.06.2009. En
(87) WO2010005480 14.01.2010. 201002
(97) EP 2306985 13.04.2011. 201115 En
(54) CONTROLLED RELEASE COMPOSITIONS OF AGENTS THAT REDUCE CIRCULATING LEVELS OF PLATELETS AND METHODS THEREFOR
(71) Biovascular, Inc., 12230 El Camino Real, Suite 100, San Diego, CA 92130, US
(72) GLIDDEN, Paul, F., 12205 Briar Knoll Way, San Diego, CA 92128, US;
PILGRIM, Alison, J., 7651 Country Club Drive, La Jolla, CA 92037, US;
HANSON, Stephen, R., 16922 N.W. Hazelgrove Court, Beaverton, OR 97006, US
(74) Baldock, Sharon Claire, Boult Wade Tennant, Verulam Gardens, 70 Gray's Inn Road, London WC1X 8BT, GB

(51) (8) **EP 2308477**
A 61K 9/20
A 61K 31/135
(30) US 18.01.2010. 689044
US 09.06.2009. 455976
US 09.06.2009. 456001
US 09.06.2009. 456029
US 09.06.2009. 456031
US 23.01.2009. 205833 P
(96) EP 10186379.3 22.01.2010. En
(97) EP 2308477 13.04.2011. 201115 En
(54) Delayed release rasagiline formulation
(71) TEVA PHARMACEUTICAL INDUSTRIES, LTD., 5 Basel Street, P.O. Box 3190, 49131 Petah Tiqva, IL
(72) Safadi, Muhammad, Street 5005, Building A, Flat B PO Box 50670, 16164, Nazareth, IL;
Licht, Daniella, 1 Keren Hayesod Street, Ramat Ilan, 54041, Givat-Shmuel, IL;
Cohen, Rachel, 17 Ar-Azil Street, 38100, Hadera, IL;
Frenkel, Anton, Shlomo Ha-Maleh 2/20, 42268, Netanya, IL;
Zholkovsky, Marina, Hahashmonaim Street 53/2, 59496, Bat-Yam, IL;
Koltai, Tamas, 4 Spiegelmann Street, 42758, Netanya, IL
(74) Nachshen, Neil Jacob, D Young & Co LLP, 120 Holborn, London EC1N 2DY, GB

(51) (8) **EP 2309992** *
A 61K 9/20
A 61K 9/28
(30) EP 27.06.2008. 08159289
SI 08.04.2009. 200900097
(86) PCT/EP2009004636 26.06.2009.
(96) EP 09769022.6 26.06.2009. En
(87) WO2009156173 30.12.2009. 200953
(97) EP 2309992 20.04.2011. 201116 En
(54) PHARMACEUTICAL COMPOSITION COMPRISING A STATIN
(71) Krka, Torvarna Zdravil, D.D., Novo Mesto, Smarjeska cesta 6, 8501 Novo mesto, SI
(72) OCEPEK, Uros, Slavka Gruma 66, 8000 Novo Mesto, SI;
VRECER, Franc, Potok 5b, 8351 Straza pri Novem mestu, SI;
TOPORISIC, Rebeka, Linhartova cesta 36, 1000 Ljubljana, SI;
BUKOVEC, Polona, Regrca vas 37, 8000 Novo mesto, SI;
JURSIC, Urska, Stopice 97, 8322 Stopice, SI
(74) UEXKÜLL & STOLBERG, Patentanwälte, Beselerstrasse 4, 22607 Hamburg, DE

(51) (8) **EP 2309994** *
A 61K 9/20
A 61K 9/28
A 61K 31/554
(30) IN 01.07.2008. KA11432008
(86) PCT/IN2009000369 29.06.2009.
(96) EP 09773067.5 29.06.2009. En
(87) WO2010001413 07.01.2010. 201001
(97) EP 2309994 20.04.2011. 201116 En
(54) SUSTAINED RELEASE PHARMACEUTICAL COMPOSITIONS COMPRISING QUETIAPINE
(71) Lupin Limited, 159 CST Road, Kalina, Santacruz (East), Mumbai - 400 098, Maharashtra, IN
(72) VELHAL, Avinash, Krishnaji, Lupin Limited (Research Park), 46A/47A Village Nande, Taluka Mulshi, Pune 411 042, Maharashtra, IN;
MIRAJKAR, Sunil, Anantrao, Lupin Limited (Research Park), 46A/47A Village Nande, Taluka Mulshi, Pune 411 042, Maharashtra, IN;
KURIL, Virendra, Ramkrupal, Lupin Limited (Research Park), 46A/47A Village Nande, Taluka Mulshi, Pune 411 042, Maharashtra, IN;
RAGHAVAN, Vineeth, Lupin Limited (Research Park), 46A/47A Village Nande, Taluka Mulshi, Pune 411 042, Maharashtra, IN;
DESHPANDAY, Ninad, Lupin Limited (Research Park), 46A/47A Village Nande, Taluka Mulshi, Pune 411 042, Maharashtra, IN
(74) Wibbelmann, Jobst, Wuesthoff & Wuesthoff, Patent- und Rechtsanwälte, Schweigerstrasse 2, 81541 München, DE

(51) (8) **EP 2268270** *
A 61K 9/28
A 61K 9/48
A 61K 31/55
(30) US 22.04.2008. 46871 P
EP 22.04.2008. 08103657
(86) PCT/EP2009054720 21.04.2009.
(96) EP 09733920.4 21.04.2009. En
(87) WO2009130204 29.10.2009. 200944
(97) EP 2268270 05.01.2011. 201101 En
(54) IMPROVED FORMULATIONS FOR POORLY PERMEABLE ACTIVE PHARMACEUTICAL INGREDIENTS
(71) Abbott Products GmbH, Hans-Böckler-Allee 20, 30173 Hannover, DE
(72) MÖSCHWITZER, Jan, P., c/o Solvay Pharmaceuticals B.V., C.J. van Houtenlaan 36, NL-1381 CP Weesp, NL;
KET, Aldo, c/o Solvay Pharmaceuticals B.V., C.J. van Houtenlaan 36, NL-1381 CP Weesp, NL;
DINTER-HEIDORN, Heike, c/o Solvay Pharmaceuticals B.V., C.J. van Houtenlaan 36, NL-1381 CP Weesp, NL

(74) Tulp, Martinus, et al, Octrooibureau Zoan B.V., IPSI, P.O. Box 140, 1380 AC Weesp, NL

(51) (8) **EP 2306988 ***
A 61K 9/46
A 61K 31/58
(30) EP 21.07.2008. 08013091
(86) PCT/EP2009058320 02.07.2009.
(96) EP 09800023.5 02.07.2009. De
(87) WO2010009961 28.01.2010. 201004
(97) EP 2306988 13.04.2011. 201115 De
(54) PHARMACEUTICAL FORMULATION FOR TREATING THE UPPER DIGESTIVE TRACT
(71) Dr. Falk Pharma GmbH, Leinenweberstr. 5, 79041 Freiburg, DE
(72) WILHELM, Rudolf, Feuerkirschenweg 2A, 76476 Bischweier, DE;
PRÖLS, Markus, Johann-VON-Weerth-Str. 11, 79100 Freiburg/Breisgau, DE
(74) Keller, Günter, et al, Lederer & Keller, Patentanwälte, Unsöldstrasse 2, 80538 München, DE

(51) (8) **EP 2317987 ***
A 61K 9/46
A 61K 31/4178
A 61K 31/549
A 61P 9/04
A 61P 9/12
A 61P 13/12
(30) US 11.07.2008. 80067
EP 11.07.2008. 08160211
(86) PCT/EP2009058724 09.07.2009.
(96) EP 09780358.9 09.07.2009. En
(87) WO2010003996 14.01.2010. 201002
(97) EP 2317987 11.05.2011. 201119 En
(54) EPROSARTAN COMPOSITIONS
(71) Abbott Healthcare Products B.V., C.J. van Houtenlaan 36, 1381 CP Weesp, NL
(72) LINK, Paulus A. J., Abbott Healthcare Products B.V., C.J. van Houtenlaan 36, NL-1381 CP Weesp, NL;
VAN DER HULST, Marcellus M., Abbott Healthcare Products B.V., C.J. van Houtenlaan 36, NL-1381 CP Weesp, NL;
BIELENBERG, Gerhard-Wilhelm, Abbott Healthcare Products B.V., C.J. van Houtenlaan 36, 1381 CP Weesp, DE;
VAN DEN AKKER, Cornelis R., Abbott Healthcare Products B.V., C.J. van Houtenlaan 36, NL-1381 CP Weesp, NL
(74) Verhage, Marinus, Octrooibureau Zoan B.V., P.O. Box 140, 1380 AC Weesp, NL

(51) (8) **EP 2299987 ***
A 61K 9/48
A 61K 9/10
A 61K 47/14
A 61K 47/24
A 61K 47/44
A 61K 31/404
(30) EP 06.06.2008. 08157748
(86) PCT/EP2009056878 04.06.2009.
(96) EP 09757593.0 04.06.2009. En
(87) WO2009147212 10.12.2009. 200950
(97) EP 2299987 30.03.2011. 201113 En
(54) CAPSULE PHARMACEUTICAL DOSAGE FORM COMPRISING A SUSPENSION FORMULATION OF AN INDOLINONE DERIVATIVE
(71) Boehringer Ingelheim International GmbH, Binger Straße 173, 55216 Ingelheim am Rhein, DE
(72) MESSERSCHMID, Roman, Boehringer Ingelheim GmbH, CD Patents, Binger Str. 173, 55216 Ingelheim Am Rhein, DE;
BINDER, Rudolf, Boehringer Ingelheim GmbH, CD Patents, Binger Str. 173, 55216 Ingelheim Am Rhein, DE;
BOCK, Thomas, Rue de Saint-Bonnet 3, CH-1195 Dully, CH;
BROX, Werner, Gerhard-Hauptmann-Strasse 11, 64743 Beerfelden, DE
(74) Hammann, Heinz, et al, Boehringer Ingelheim GmbH, Corporate Patents, Binger Strasse 173, 55216 Ingelheim am Rhein, DE

(51) (8) **EP 2313087 ***
A 61K 9/48
A 61K 9/10
A 61K 47/14
A 61K 47/24
A 61K 47/44
A 61K 31/404
(30) EP 06.06.2008. 08157750
(86) PCT/EP2009056895 04.06.2009.
(96) EP 09757601.1 04.06.2009. En
(87) WO2009147220 10.12.2009. 200950
(97) EP 2313087 27.04.2011. 201117 En
(54) PHARMACEUTICAL DOSAGE FORM FOR IMMEDIATE RELEASE OF AN INDOLINONE DERIVATIVE
(71) Boehringer Ingelheim International GmbH, Binger Strasse 173, 55216 Ingelheim am Rhein, DE
(72) MESSERSCHMID, Roman, Boehringer Ingelheim GmbH, CD Patents, Binger Str. 173, 55216 Ingelheim Am Rhein, DE;
LACH, Peter, Boehringer Ingelheim GmbH, CD Patents, Binger Str.173, 55216 Ingelheim Am Rhein, DE;
SOKOLIESS, Torsten, Boehringer Ingelheim GmbH, CD Patents, Binger Str. 173, 55216 Ingelheim Am Rhein, DE;
STOPFER, Peter, Boehringer Ingelheim GmbH, CD Patents, Binger Str. 173, 55216 Ingelheim Am Rhein, DE;
TROMMESHAUSER, Dirk, Boehringer Ingelheim GmbH, CD Patents, Binger Str. 173, 55216 Ingelheim Am Rhein, DE
(74) Hammann, Heinz, Boehringer Ingelheim GmbH, CD-Patents, Binger Straße 173, 55216 Ingelheim am Rhein, DE

(51) (8) **EP 2320876 ***
A 61K 9/48
(30) US 13.06.2008. 61275 P
(86) PCT/EP2009057292 12.06.2009.
(96) EP 09761790.6 12.06.2009. En
(87) WO2009150228 17.12.2009. 200951
(97) EP 2320876 18.05.2011. 201120 En
(54) HYDROXYPROPYL CELLULOSE CAPSULE SHELL
(71) Pfizer Inc., 235 East 42nd Street, New York, NY 10017, US
(72) BROWN, Adrian, GlaxoSmithKline, New Frontiers Science Park South, Third Avenue, Harlow, Essex CM19 5AW, GB;

MATTHEWS, Wayne M, GlaxoSmithKline, New Frontiers Science Park South, Third Avenue, Harlow, Essex CM19 5AW, GB;
MARGETSON, Daniel N, GlaxoSmithKline, New Frontiers Science Park South, Third Avenue, Harlow, Essex CM19 5AW, GB;
MCALLISTER, Stephen Mark, GlaxoSmithKline, New Frontiers Science Park South, Third Avenue, Harlow, Essex CM19 5AW, GB;
RUSSELL, Danielle Genevieve Rebecca, GlaxoSmithKline, New Frontiers Science Park South, Third Avenue, Harlow, Essex CM19 5AW, GB
(74) Brunetti, Fabrizio, et al, Pfizer Limited, European Patent Department, Ramsgate Road, Sandwich, Kent CT13 9NJ, GB

(51) (8) **EP 2296635 ***
A 61K 9/50
A 61K 9/51
A 61K 9/16
A 61K 31/755
A 61N 1/02
(30) DE 09.07.2008. 102008032183
DE 30.08.2008. 102008045152
(86) PCT/EP2009004925 08.07.2009.
(96) EP 09777024.2 08.07.2009. De
(87) WO2010003647 14.01.2010. 201002
(97) EP 2296635 23.03.2011. 201112 De
(54) ARTIFICIAL OXYGEN CARRIERS AND USE THEREOF
(71) Universität Duisburg-Essen, Universitätsstrasse 2, 45141 Essen, DE
(72) DE GROOT, Herbert, Otto-Hahn-Strasse 171, 40597 Düsseldorf, DE;
MAYER, Christian, Am Kaiserberg 12, 47058 Duisburg, DE;
PETRAT, Frank, Wittgenpfad 15, 45277 Essen, DE;
KIRSCH, Michael, Buchenweg 11, 40723 Hilden, DE
(74) Strehlke, Ingo Kurt, Patentanwälte, Gesthuysen, von Rohr & Eggert, Huyssenallee 100, 45128 Essen, DE

(51) (8) **EP 2296636 ***
A 61K 9/50
A 61K 9/51
A 61K 31/198
A 61P 25/28
(30) EP 20.05.2008. 08425351
(86) PCT/EP2009056042 19.05.2009.
(96) EP 09749819.0 19.05.2009. En
(87) WO2009141329 26.11.2009. 200948
(97) EP 2296636 23.03.2011. 201112 En
(54) POLYELECTROLYTE-ENCAPSULATED GOLD NANOPARTICLES CAPABLE OF CROSSING BLOOD-BRAIN BARRIER
(71) Consorzio per il Centro di, Biomedicina Molecolare Scrl, Strada Statale 14, C/o Area Science Park Km. 163,5, 34012 Basovizza (TS), IT
(72) KROL, Silke, c/o Consorzio per il Centro di Biomedicina, Molecolare Scrl, Area Science Park, Strada Statale 14 - km 163, 5, I-34012 Basovizza (Trieste), IT;
LOPEZ-VIOTA GALLARDO, Julian, c/o Consorzio per il Centro di Biomedicina, Molecolare Scrl, Area Science Park, Strada Statale 14 - km 163, 5, I-34012 Basovizza (Trieste), IT
(74) Spadaro, Marco, et al, Cantaluppi & Partners, Viale della Tecnica, 205, IT-00144 Roma, IT

(51) (8) **EP 2303244 ***
A 61K 9/50
C 07D 333/20
A 61K 9/26
A 61K 9/30
(30) EP 13.06.2008. 08010804
EP 25.07.2008. 08161169
EP 05.12.2008. 08170847
(86) PCT/EP2009057316 12.06.2009.
(96) EP 09761799.7 12.06.2009. En
(87) WO2009150238 17.12.2009. 200951
(97) EP 2303244 06.04.2011. 201114 En
(54) GASTRO-RESISTANT PHARMACEUTICAL ORAL COMPOSITIONS COMPRISING DULOXETINE OR ITS PHARMACEUTICALLY ACCEPTABLE DERIVATIVES
(71) KRKA, D.D., Novo Mesto, Smarjeska cesta 6, 8501 Novo mesto, SI
(72) ZAJC, Natalija, Drska 46, 8000 Novo mesto, SI;
VRECER, Franc, Potok 5b, 8351 Straza pri Novem mestu, SI;
BENKIC, Primoz, Masera-Spasiceva ulica 7, 1000 Ljubljana, SI;
BUKOVEC, Polona, Regrca vas 37a, 8000 Novo Mesto, SI;
TIHI, Jaroslav, Ulica Slavka Gruma 36, 8000 Novo Mesto, SI;
GARTNER, Andrej, Scopolijeva 51, 1000 Ljubljana, SI
(74) HOFFMANN EITLE, Patent- und Rechtsanwälte, Arabellastraße 4, 81925 München, DE

(51) (8) **EP 2313088 ***
A 61K 9/50
A 61K 31/4439
(30) CH 11.08.2008. 12522008
CH 14.05.2009. 760092009
(86) PCT/EP2009060388 11.08.2009.
(96) EP 09781706.8 11.08.2009. En
(87) WO2010018175 18.02.2010. 201007
(97) EP 2313088 27.04.2011. 201117 En
(54) ORAL PHARMACEUTICAL FORMULATION FOR OMEPRAZOLE COMPRISING A SPECIFIC SEPARATION LAYER
(71) Mepha GmbH, Dornacherstrasse 114, Postfach 445, 4147 Aesch, CH
(72) SPITZ, Marco, Birkenweg 2, 79589 Binzen, DE
(74) Braun, André jr., Braunpat Braun Eder AG, Reussstrasse 22, 4054 Basel, CH

(51) (8) **EP 2310000 ***
A 61K 9/51
A 61K 31/48
(30) US 26.06.2008. 76065 P
(86) PCT/US2009048972 26.06.2009.
(96) EP 09771218.6 26.06.2009. En
(87) WO2009158687 30.12.2009. 200953
(97) EP 2310000 20.04.2011. 201116 En
(54) DERMAL DELIVERY
(71) Anterios, Inc., 142 West 57th Street, Suite 4A, New York, NY 10019, US
(72) EDELSON, Jonathan, 212 Mamaroneck Road, Scarsdale, NY 10583, US;
KOTYLA, Timothy, 53 Lawrence Drive, Unit 413, Lowell, MA 01854, US;
ZHANG, Boke, 21 Harriet Street, Brighton, MA 02135, US
(74) Cornish, Kristina Victoria Joy, et al, Kilburn & Strode LLP, 20 Red Lion Street, London, WC1R 4PJ, GB

(51) (8) **EP 2310001** *
A 61K 9/70
A 61K 31/565
(30) US 10.07.2008. 216811
(86) PCT/US2009050069 09.07.2009.
(96) EP 09790211.8 09.07.2009. En
(87) WO2010006143 14.01.2010. 201002
(97) EP 2310001 20.04.2011. 201116 En
(54) TRANSDERMAL ESTROGEN DEVICE AND DELIVERY
(71) Noven Pharmaceuticals, INC., 11960 Southwest 144th Street, Miami, FL 33186, US
(72) MANTELLE, Juan, 10821 S.W. 92 Avenue, Miami, FL 33176, US
(74) Sommer, Michael Bech, et al, Zacco Denmark A/S, Hans Bekkevolds Allé 7, DK-2900 Hellerup, DK

(51) (8) **EP 2305221**
A 61K 31/00
A 61K 31/502
A 61P 35/00
(30) US 01.12.2003. 526244 P
GB 01.12.2003. 0327844
(96) EP 10178515.2 30.11.2004. En
(97) EP 2305221 06.04.2011. 201114 En
(54) Dna damage repair inhibitors for treatment of cancer
(71) Kudos Pharmaceuticals Limited, 327 Cambridge Science Park, Milton Road, Cambridge, Cambridgeshire CB4 0WG, GB;
The Institute of Cancer Research, 123 Old Brompton Road, London, Greater London SW7 3RP, GB
(72) Ashworth, Alan, The Breakthrough Breast Cancer Research Centre, Institute of Cancer Research, 123 Old Brompton Road, London, Greater London SW7 3RP, GB;
Jackson, Stephen, KuDOS Pharmaceuticals Limited, 327 Cambridge Science Park, Milton Road, Cambridge, Cambridgeshire CB4 0WG, GB;
Martin, Niall, KuDOS Pharmaceuticals Limited, 327 Cambridge Science Park, Milton Road, Cambridge, Cambridgeshire CB4 0WG, GB;
Smith, Graeme, KuDOS Pharmaceuticals Limited, 327 Cambridge Science Park, Milton Road, Cambridge, Cambridgeshire CB4 0WG, GB
(74) Sutcliffe, Nicholas Robert, et al, Mewburn Ellis LLP, 33 Gutter Lane, London, EC2V 8AS, GB

(51) (8) **EP 2317991** *
A 61K 31/00
A 61K 31/485
A 61P 13/02
(30) EP 07.07.2008. 08159802
(86) PCT/EP2009058630 07.07.2009.
(96) EP 09780282.1 07.07.2009. En
(87) WO2010003963 14.01.2010. 201002
(97) EP 2317991 11.05.2011. 201119 En
(54) USE OF OPIOID ANTAGONISTS FOR TREATING URINARY RETENTION
(71) Euro-Celtique S.A., 2, avenue Charles de Gaulle, 1653 Luxembourg, LU
(72) HOPP, Michael, Dillenburger Str. 17, 65520 Bad Camberg, DE;
LEYENDECKER, Petra, Neutitscheiner Str. 7c, 35619 Braunfels, DE
(74) Maiwald Patentanwalts GmbH, Elisenhof, Elisenstrasse 3, 80335 München, DE

(51) (8) **EP 2322150**
A 61K 31/00
A 61K 31/401
A 61K 31/4196
A 61P 3/10
A 61K 31/415
A 61P 3/00
G 01N 33/58
G 01N 33/566
C 12N 15/12
(30) US 10.01.2005. 643086 P
US 19.05.2005. 683172 P
US 14.10.2005. 726880 P
(96) EP 10010818.2 09.01.2006. En
(97) EP 2322150 18.05.2011. 201120 En
(54) Method of identifying GLP-1 secretagogues
(71) Arena Pharmaceuticals, Inc., 6166 Nancy Ridge Drive, San Diego, CA 92121, US
(72) Chu, Zhi-Liang, 11489 Creekstone Lane, San Diego, California 92128, US;
Leonard, James N., 10667 Viacha Drive, San Diego, California 92124, US;
Al-Shamma, Hussien A., 134 Townwood Way, Encinitas, California 92024, US;
Jones, Robert M., 10937 Corte Luz Del Sol, San Diego, California 92130, US
(74) Cripps, Joanna Elizabeth, et al, Mewburn Ellis LLP, 33 Gutter Lane, London, EC2V 8AS, GB

(51) (8) **EP 2322151**
A 61K 31/00
A 61K 31/401
A 61K 31/4196
A 61K 31/415
A 61P 3/10
A 61P 3/00
G 01N 33/58
G 01N 33/566
C 12N 15/12
A 61K 9/52
A 61K 9/22
A 61K 9/00
(30) US 10.01.2005. 643086 P
US 19.05.2005. 683172 P
US 14.10.2005. 726880 P
(96) EP 10010819.0 09.01.2006. En
(97) EP 2322151 18.05.2011. 201120 En
(54) Sustained release formulation comprising a GPR119 agonist and a DPP-IV inhibitor
(71) Arena Pharmaceuticals, Inc., 6166 Nancy Ridge Drive, San Diego, CA 92121, US
(72) Chu, Zhi-Liang, 11489 Creekstone Lane, San Diego, California 92128, US;
Leonard, James N., 10667 Viacha Drive, San Diego, California 92124, US;
Al-Shamma, Hussien A., 134 Townwood Way, Encinitas, California 92024, US;
Jones, Robert M., 10937 Corte Luz Del Sol, San Diego, California 92130, US

(74) Cripps, Joanna Elizabeth, et al, Mewburn Ellis LLP, 33 Gutter Lane, London, EC2V 8AS, GB

(51) (8) **EP 2322152**
A 61K 31/00
A 61K 31/401
A 61K 31/4196
A 61P 3/10
A 61K 31/415
A 61P 3/00
G 01N 33/58
G 01N 33/566
C 12N 15/12
(30) US 10.01.2005. 643086 P
US 19.05.2005. 683172 P
US 14.10.2005. 726880 P
(96) EP 10010820.8 09.01.2006. En
(97) EP 2322152 18.05.2011. 201120 En
(54) Method of preparing a composition comprising a GPR119 agonist
(71) Arena Pharmaceuticals, Inc., 6166 Nancy Ridge Drive, San Diego, CA 92121, US
(72) Chu, Zhi-Liang, 11489 Creekstone Lane, San Diego, California 92128, US;
Leonard, James N., 10667 Viacha Drive, San Diego, California 92124, US;
Al-Shamma, Hussien A., 134 Townwood Way, Encinitas, California 92024, US;
Jones, Robert M., 10937 Corte Luz Del Sol, San Diego, California 92130, US
(74) Cripps, Joanna Elizabeth, et al, Mewburn Ellis LLP, 33 Gutter Lane, London, EC2V 8AS, GB

(51) (8) **EP 2322156**
A 61K 31/00
A 61K 31/401
A 61K 31/4196
A 61K 31/415
A 61P 3/10
A 61P 3/00
G 01N 33/58
G 01N 33/566
C 12N 15/12
(30) US 10.01.2005. 643086 P
US 19.05.2005. 683172 P
US 14.10.2005. 726880 P
(96) EP 10010656.6 09.01.2006. En
(97) EP 2322156 18.05.2011. 201120 En
(54) Composition for the treatment of diabetes and conditions related thereto and for the treatment of conditions ameliorated by increasing a blood GLP-1 level
(71) Arena Pharmaceuticals, Inc., 6166 Nancy Ridge Drive, San Diego, CA 92121, US
(72) Chu, Zhi-Liang, 11489 Creekstone Lane, San Diego, California 92128, US;
Leonard, James, N., 10667 Viacha Drive, San Diego, California 92124, US;
Al-Shamma, Hussien, A., 134 Townwood Way, Encinitas, California 92024, US;
Jones, Robert, M., 10937 Corte Luz del Sol, San Diego, California 92130, US

(74) Cripps, Joanna Elizabeth, et al, Mewburn Ellis LLP, 33 Gutter Lane, London, EC2V 8AS, GB

(51) (8) **EP 2322157**
A 61K 31/00
A 61K 31/401
A 61K 31/4196
A 61K 31/415
A 61P 3/10
A 61P 3/00
G 01N 33/58
G 01N 33/566
C 12N 15/12
(30) US 10.01.2005. 643086 P
US 19.05.2005. 683172 P
US 14.10.2005. 726880 P
(96) EP 10010659.0 09.01.2006. En
(97) EP 2322157 18.05.2011. 201120 En
(54) Composition for the treatment of diabetes and conditions related thereto and for the treatment of conditions ameliorated by increasing a blood GLP-1 level
(71) Arena Pharmaceuticals, Inc., 6166 Nancy Ridge Drive, San Diego, CA 92121, US
(72) Chu, Zhi-Liang, 11489 Creekstone Lane, San Diego, California 92128, US;
Leonard, James, N., 10667 Viacha Drive, San Diego, CA 92124, US;
Al-Shamma, Hussien, A., 134 Townwood Way, Encinitas, California 92024, US;
Jones, Robert, M., 10937 Corte Luz del Sol, San Diego, California 92130, US
(74) Cripps, Joanna Elizabeth, et al, Mewburn Ellis LLP, 33 Gutter Lane, London, EC2V 8AS, GB

(51) (8) **EP 2296639 ***
A 61K 31/01
A 61K 31/047
A 61P 17/02
A 61P 17/06
(30) FR 16.05.2008. 0853185
(86) PCT/EP2009056007 18.05.2009.
(96) EP 09745847.5 18.05.2009. Fr
(87) WO2009138515 19.11.2009. 200947
(97) EP 2296639 23.03.2011. 201112 Fr
(54) EMOLLIENT COMPOSITION FOR THE PREVENTIVE TREATMENT OF ATOPIC DERMATITIS
(71) Pierre Fabre Dermo-Cosmétique, 45, place Abel-Gance, 92100 Boulogne-Billancourt, FR
(72) COUSTOU, Didier, 33 rue Antoine de Gargas, F-31500 Toulouse, FR;
DUPLAN, Hélne, Villa les Cactées, 51 Chemin de Mervilla, F-31320 Auzeville Tolosane, FR
(74) Ahner, Francis, et al, Cabinet Régimbeau, 20, rue de Chazelles, 75847 Paris Cedex 17, FR

(51) (8) **EP 2320878 ***
A 61K 31/045
A 61K 31/35
A 61P 11/00
A 61P 11/06
A 61P 11/08
(30) DE 04.09.2008. 102008045702

DE 12.09.2008. 102008047221
(86) PCT/EP2009005931 14.08.2009.
(96) EP 09777903.7 14.08.2009. De
(87) WO2010025821 11.03.2010. 201010
(97) EP 2320878 18.05.2011. 201120 De
(54) MONOTERPENES FOR TREATING RESPIRATORY TRACT DISEASES, IN PARTICULAR BRONCHOPULMONARY DISEASES
(71) Maria Clementine Martin Klosterfrau, Vertriebsgesellschaft mbH, Gereonsmühlengasse 1-11, 50670 Köln, DE
(72) GREVE, Harald, Schorlemmer Strasse 115, 40545 Düsseldorf, DE
(74) Strehlke, Ingo Kurt, Patentanwälte, Gesthuysen, von Rohr & Eggert, Huyssenallee 100, 45128 Essen, DE

(51) (8) **EP 2313090 ***
A 61K 31/10
A 23L 1/29
A 61K 31/22
C 07C 317/04
C 07C 317/06
C 07C 317/12
C 07C 321/14
C 07C 321/18
C 07C 321/22
A 61P 3/04
A 61P 9/10
(30) EP 15.07.2008. 08160450
US 15.07.2008. 80804 P
(86) PCT/NO2009000262 13.07.2009.
(96) EP 09798181.5 13.07.2009. En
(87) WO2010008299 21.01.2010. 201003
(97) EP 2313090 27.04.2011. 201117 En
(54) NOVEL SULPHUR CONTAINING LIPIDS FOR USE AS FOOD SUPPLEMENT OR AS MEDICAMENT
(71) Pronova BioPharma Norge AS, Vollsveien 6, 1366 Lysaker, NO
(72) HOLMEIDE, Anne, Kristin, Orionveien 12, N-0489 Oslo, NO;
HOVLAND, Ragnar, Blomsterveien 4F, N-1450 Nesoddtangen, NO;
BRÆNDVANG, Morten, Rabbenveien 59C, N-3039 Drammen, NO
(74) Lillegraven, Rita, et al, Zacco Norway AS, Patent Department, Haakon VII's gt. 2, P.O. Box 2003 Vika, 0125 Oslo, NO

(51) (8) **EP 2196200**
A 61K 31/122
A 61P 25/02
A 61P 25/04
(30) JP 18.01.2005. 2005010858
(96) EP 10003490.9 18.01.2006. En
(97) EP 2196200 16.06.2010. 201024 En
(54) Cyclohexenone derivative for treating or preventing hypesthesia or hyperesthesia caused by diabetes
(71) Meiji Dairies Corporation, 2-10, Shin-suna 1-chome, Koto-ku, Tokyo 136-8908, JP
(72) Shiomi, Hirohito, Fukuyama University, Faculty of Pharmacy and Pharmaceutical Sciences, Laboratory of Pharmacology, 1 Gakuen-cho, Fukuyama-shi, Hiroshima 729-0292, JP;
Tamura, Yutaka, Fukuyama University, Faculty of Pharmacy and Pharmaceutical Sciences, Laboratory of Pharmacology, 1 Gakuen-cho, Fukuyama-shi, Hiroshima 729-0292, JP;
Luu, Bang, Centre Nat. de la Rech. Scientifique, Universite Louis Pasteur, 5, rue, Blaise Pascal, 67084 Strasbourg, FR;
Yamada, Masashi, Meiji Dairies Corp., Pharmaceut. Dept., 1-2-10, Shinsuna, Koto-ku, Tokyo 136-8908, JP;
Koyama, Keizou, Meiji Dairies Corp., Pharmaceut. Dept., 1-2-10, Shinsuna, Koto-ku, Tokyo 136-8908, JP;
Suzuki, Hiroto, Meiji Dairies Corp., Pharmaceut. Dept., 1-2-10, Shinsuna, Koto-ku, Tokyo 136-8908, JP
(74) Grünecker, Kinkeldey, Stockmair & Schwanhäusser, Anwaltssozietät, Leopoldstrasse 4, 80802 München, DE

(51) (8) **EP 2296640 ***
A 61K 31/13
A 61K 31/4545
A 61K 31/439
A 61K 31/506
A 61K 45/06
A 61P 27/02
(30) US 12.05.2008. 52480
(86) PCT/US2009043472 11.05.2009.
(96) EP 09747285.6 11.05.2009. En
(87) WO2009140201 19.11.2009. 200947
(97) EP 2296640 23.03.2011. 201112 En
(54) METHODS FOR PREVENTING THE DEVELOPMENT OF RETINOPATHY BY THE ORAL ADMINISTRATION OF NNR LIGANDS
(71) Targacept Inc., 200 East First Street, Suite 300, Winston-Salem, NC 27101, US;
Toler, Steve, 4256 Saddlewood Forest Drive, Winston-Salem, NC 27106, US;
Lippiello, Patrick M., 1233 Arboretum Drive, Lewisville, NC 27023, US;
Cullison, Scott N., 2718 Winslow Lane, Winston-Salem, NC 27103, US;
Bencherif, Merouane, 104 Brampton Court, Winston-Salem, North Carolina 27106, US
(72) TOLER, Steven M., 4256 Saddlewood Forest Drive, Winston-Salem, NC 27106, US;
LIPPIELLO, Patrick, M., 1233 Arboretum Drive, Lewisville, NC 27023, US;
CULLISON, Scott, N., 2718 Winslow Lane, Winston-Salem, NC 27103, US;
BENCHERIF, Merouane, 104 Brampton Court, Winston-Salem, NC 27106, US
(74) Crowhurst, Charlotte Waveney, et al, Potter Clarkson LLP, Park View House, 58 The Ropewalk, Nottingham, NG1 5DD, GB

(51) (8) **EP 2315586 ***
A 61K 31/13
A 61P 27/16
A 61P 43/00
(30) EP 12.06.2008. 08010749
US 12.06.2008. 131789
(86) PCT/EP2009004184 10.06.2009.
(96) EP 09761483.8 10.06.2009. En
(87) WO2009149920 17.12.2009. 200951
(97) EP 2315586 04.05.2011. 201118 En
(54) 1-AMINO-ALKYLCYCLOHEXANE DERIVATIVES FOR THE TREATMENT OF SLEEP DISORDERS

(71) Merz Pharma GmbH & Co. KGaA, Eckenheimer Landstrasse 100, 60318 Frankfurt am Main, DE
(72) ELLERS-LENZ, Barbara, Friedensstrasse 18, 64546 Mörfelden-Walldorf, DE;
ROSENBERG, Tanja, Eckenheimer Landstr. 46, 60318 Frankfurt am Main, DE;
KRÜGER, Hagen, Gartenstr. 181, 60596 Frankfurt/Main, DE;
ALTHAUS, Michael, Dresdener Str. 82, 61137 Schöneck, DE
(74) Ricker, Mathias, Wallinger Ricker Schlotter Foerstl, Patent- und Rechtsanwälte, Zweibrückenstraße 5-7, D-80331 München, DE

(51) (8) **EP 2299992** *
A 61K 31/135
(30) US 19.06.2008. 132487 P
(86) PCT/US2009003670 19.06.2009.
(96) EP 09767090.5 19.06.2009. En
(87) WO2009154777 23.12.2009. 200952
(97) EP 2299992 30.03.2011. 201113 En
(54) PROCESS FOR PREPARING AND DRYING SOLID RASAGILINE BASE
(71) Teva Pharmaceutical Industries Ltd, 5 Basel Street, PO Box 3190, 49131 Petach Tikva, IL
(72) FRENKEL, Anton, Shlomo Hameleh 2/20, Netanya 42268, IL
(74) Nachshen, Neil Jacob, et al, D Young & Co LLP, 120 Holborn, London EC1N 2DY, GB

(51) (8) **EP 2299993** *
A 61K 31/135
(30) US 19.06.2008. 132512 P
(86) PCT/US2009003677 19.06.2009.
(96) EP 09767095.4 19.06.2009. En
(87) WO2009154782 23.12.2009. 200952
(97) EP 2299993 30.03.2011. 201113 En
(54) PROCESS FOR PURIFYING RASAGILINE BASE
(71) Teva Pharmaceutical Industries, Ltd., 5 Basel Street, P.O. Box 3190, 49131 Petach-Tikva, IL
(72) FRENKEL, Anton, Shlomo Hameleh 2/20, 42268 Natanya, IL
(74) Nachshen, Neil Jacob, et al, D Young & Co LLP, 120 Holborn, London EC1N 2DY, GB

(51) (8) **EP 2322162**
A 61K 31/135
A 61K 31/55
A 61P 3/04
(30) US 23.12.2004. 638667 P
US 08.06.2005. 688901 P
(96) EP 10010050.2 21.12.2005. En
(97) EP 2322162 18.05.2011. 201120 En
(54) 5HT2C receptor modulator compositions and methods of use
(71) Arena Pharmaceuticals, Inc., 6166 Nancy Ridge Drive, San Diego, CA 92121-3223, US
(72) Behan, Dominic P., 15581 Pinehurst Place, San Diego, CA 92131, US;
Smith, Brian M., 13182 Mesa Crest Place, San Diego, CA 92129, US;
Bjenning, Christina, 160 15th Avenue, Seacliff, New York 11579, US
(74) Tollervey, Rebecca Marie, et al, Mewburn Ellis LLP, 33 Gutter Lane, London, EC2V 8AS, GB

(51) (8) **EP 2101731** *
A 61K 31/138
A 61K 31/35
A 61K 9/127
C 07D 309/10
A 61P 35/00
(30) US 21.11.2006. 860420 P
US 22.11.2006. 860788 P
(86) PCT/US2007085443 21.11.2007.
(96) EP 07871563.8 21.11.2007. En
(87) WO2008070463 12.06.2008. 200824
(97) EP 2101731 23.09.2009. 200939 En
(54) ENDOXIFEN METHODS AND COMPOSITIONS
(71) Jina Pharmaceuticals Inc., 28100 North Ashley Circle, Suite 103, Libertyville IL 60048, US
(72) AHMAD, Ateeq, 4795 West Pebble Beach Drive, Wadsworth, IL 60083, US;
ALI, Shoukath M., 29681 North Waukegan Road 204, Lake Bluff, IL 60048, US;
AHMAD, Moghis U., 3050 North Forrest Hills Court, Wadsworth, IL 60083, US;
SHEIKH, Saifuddin, 1059 South West Avenue, Waukegan, IL 60085, US;
AHMAD, Imran, 4731 West Pebble Beach Drive, Wadsworth, IL 60083, US
(74) Glawe, Delfs, Moll, Patent- und Rechtsanwälte, Rothenbaumchaussee 58, 20148 Hamburg, DE

(51) (8) **EP 2295050**
A 61K 31/165
A 61P 25/24
(30) FR 09.09.2005. 0509207
(96) EP 10011610.2 08.09.2006. Fr
(97) EP 2295050 16.03.2011. 201111 Fr
(54) Use of agomelatine for the preparation of medicaments for the treatment of sleep disorders in depressed patients
(71) Les Laboratoires Servier, 35, rue de Verdun, 92284 Suresnes Cedex, FR
(72) Delalleau, Bruno, 32, rue de l' Alma, 92600 Asnieres-sur-Seine, FR

(51) (8) **EP 2301527**
A 61K 31/165
A 61P 25/24
A 61K 31/22
(30) FR 09.09.2005. 0509208
(96) EP 10011609.4 08.09.2006. Fr
(97) EP 2301527 30.03.2011. 201113 Fr
(54) Association of agomelatine with a mood stabilizer, and pharmaceutical compositions comprising them
(71) Les Laboratoires Servier, 35, rue de Verdun, 92284 Suresnes Cedex, FR
(72) De Bodinat, Christian, 15, rue Alfred Roll, 75017 Paris, FR

(51) (8) **EP 2308482**
A 61K 31/165
A 61P 21/00
A 61P 19/00
(30) US 08.06.2006. 811840 P
US 08.06.2006. 811859 P
EP 18.08.2005. 05017977
(96) EP 10185770.4 18.08.2006. En

(97) EP 2308482 13.04.2011. 201115 En
(54) Novel use of peptide compounds for treating muscle pain
(71) UCB Pharma GmbH, Alfred-Nobel-Strasse 10, 40789 Monheim, DE
(72) Beyreuther, Bettina, Weiherstrasse 6, 40219, Düsseldorf, DE;
Stöhr, Thomas, Marie-Curie-Strasse 24, 40789, Monheim, DE
(74) Weiss, Wolfgang, et al, Weickmann & Weickmann, Patentanwälte, Postfach 86 08 20, 81635 München, DE

(51) (8) **EP 2303251 ***
A 61K 31/167
A 61K 31/192
A 61K 31/519
A 61P 9/10
A 61P 29/00
A 61P 37/00
(30) US 07.04.2008. 64975 P
US 07.07.2008. 129574 P
(86) PCT/GB2009000882 03.04.2009.
(96) EP 09784559.8 03.04.2009. En
(87) WO2009125168 15.10.2009. 200942
(97) EP 2303251 06.04.2011. 201114 En
(54) NEW COMBINATION FOR USE IN THE TREATMENT OF INFLAMMATORY DISORDERS
(71) Cardoz AB, P O Box 2077, 103 12 Stockholm, SE
(72) RAUD, Johan, Cardoz AB, P.O. Box 2077, 10312 Stockholm, SE;
DALSGAARD, Carl-Johan, Cardoz AB, P.O. Box 2077, 10312 Stockholm, SE
(74) McNeeney, Stephen Phillip, Potter Clarkson LLP, Park View House, 58 The Ropewalk, Nottingham, NG1 5DD, GB

(51) (8) **EP 2306999 ***
A 61K 31/194
A 61K 31/20
A 61K 31/23
A 61K 31/722
A 61K 45/06
A 61P 7/00
A 61K 47/12
A 61K 47/36
A 61K 9/00
(30) EP 05.08.2008. 08161799
(86) PCT/EP2009059749 28.07.2009.
(96) EP 09761818.5 28.07.2009. En
(87) WO2009150257 17.12.2009. 200951
(97) EP 2306999 13.04.2011. 201115 En
(54) COMPOSITIONS FOR TREATING ROSACEA
(71) Polichem SA, 50, Val Fleuri, 1526 Luxembourg, LU
(72) MAILLAND, Federico, Strada Regina 10, CH-6900 Lugano, CH;
MURA, Emanuela, Via Bellinzona 76, I-22100 Como, IT
(74) Pistolesi, Roberto, et al, Dragotti & Associati Srl, Via Marina 6, 20121 Milano, IT

(51) (8) **EP 2313092 ***
A 61K 31/20
A 61K 31/202
A 61P 27/00
(30) GB 24.07.2008. 0813599
(86) PCT/GB2009001848 24.07.2009.
(96) EP 09784797.4 24.07.2009. En
(87) WO2010010365 28.01.2010. 201004
(97) EP 2313092 27.04.2011. 201117 En
(54) POLYUNSATURATED FATTY ACIDS FOR IMPROVING VISION
(71) Pharma Marine AS, Gangstøyika, 5024 Zlesund, NO; Cockbain, Julian, St. Bride's House, 10 Salisbury Square, London EC4Y 8JD, GB
(72) SAEBO, Asgeir, Pharma Marine AS, Gangstøyika, N-5024 lesund, NO
(74) Cockbain, Julian, Dehns, St Bride's House, 10 Salisbury Square, London, EC4Y 8JD, GB

(51) (8) **EP 2293790 ***
A 61K 31/27
A 61K 31/445
A 61K 31/551
A 61K 45/06
A 61P 25/28
(30) FR 02.06.2008. 0802996
(86) PCT/FR2009051041 02.06.2009.
(96) EP 09769521.7 02.06.2009. Fr
(87) WO2009156680 30.12.2009. 200953
(97) EP 2293790 16.03.2011. 201111 Fr
(54) COMBINATION OF A NICOTINIC RECEPTOR PARTIAL AGONIST AND OF AN ACETYLCHOLINESTERASE INHIBITOR, PHARMACEUTICAL COMPOSITION CONTAINING SAME AND USE THEREOF IN THE TREATMENT OF COGNITIVE DISORDERS
(71) Sanofi-Aventis, 174 Avenue de France, 75013 Paris, FR
(72) BERGIS, Olivier, c/o Sanofi-Aventis, Département Brevets, 174 avenue de France, F-75013 Paris, FR;
PICHAT, Philippe, c/o Sanofi-Aventis, Département Brevet, 174 avenue de France, F-75013 Paris, FR;
URANI, Alexandre, c/o Sanofi-Aventis, Département Brevets, 174 avenue de France, F-75013 Paris, FR
(74) Quellari, Mylne Audrey Séverine, et al, Sanofi-Aventis, Département Brevets, 174, avenue de France, 75013 Paris, FR

(51) (8) **EP 2314292**
A 61K 31/277
A 61K 31/55
A 61P 33/00
A 61P 33/10
(96) EP 09173525.8 20.10.2009. En
(97) EP 2314292 27.04.2011. 201117 En
(54) Endoparasiticidal compositions
(71) Novartis AG, Lichtstrasse 35, 4056 Basel, CH
(72) Kaminsky, Ronald, Joressens, 1789Lugnorre, CH;
Little, Andrew, c/o Novartis Animal Health, inc., Schwarzwaldallee, 215, Postfach, 4002 Basel, CH;
Redpath, Arthur, Auf den Felsen 37, 4114 Hofstetten, CH;
Schorderet Weber, Sandra, Sablons 30, 2000 Neuch?tel, CH
(74) Liphardt, Bernd, Novartis Animal Health, Inc., Patent and Trademark Group, Werk Rosenthal, 4002 Basel, CH

(51) (8) **EP 2307003 ***
A 61K 31/282
A 61K 31/337
A 61K 31/436
A 61K 31/4745
A 61K 31/4995
A 61K 31/505
A 61K 31/517
A 61K 31/704
A 61P 35/00
(30) US 16.05.2008. 53726
(86) PCT/US2009044334 18.05.2009.
(96) EP 09747756.6 18.05.2009. En
(87) WO2009140675 19.11.2009. 200947
(97) EP 2307003 13.04.2011. 201115 En
(54) COMBINATION THERAPY WITH PM00104 AND ANOTHER ANTITUMOR AGENT
(71) Pharma Mar S.A., Poligono Industrial La Mina, Avda. de los Reyes 1, Colmenar Viejo, 28770 Madrid, ES
(72) LEPAGE, Doreen, The Richards Building, 64 Sidney Street (5th Floor), Cambridge, MA 02139-4170, US;
AVILES MARIN, Pablo, Manuel, Avda. de los Reyes, 1 P.I. La Mina Norte, Colmenar Viejo, E-28770 Madrid, ES;
GUILLEN NAVARRO, Maria, Jose, Avda. de los Reyes, 1 P.I. La Mina Norte, Colmenar Viejo, E-28770 Madrid, ES
(74) ABG Patentes, S.L., Avenida de Burgos 16D, Edificio Euromor, 28036 Madrid, ES

---

(51) (8) **EP 2320886 ***
A 61K 31/325
A 61K 31/357
A 61K 31/396
A 61K 31/40
A 61K 31/4025
A 61K 31/403
A 61K 31/4155
A 61K 31/4178
A 61K 31/4192
A 61K 31/4245
A 61K 31/427
A 61K 31/428
A 61K 31/4433
A 61K 31/4439
A 61K 31/453
(30) US 28.07.2008. 137214 P
(86) PCT/US2009051864 27.07.2009.
(96) EP 09790852.9 27.07.2009. En
(87) WO2010014554 04.02.2010. 201005
(97) EP 2320886 18.05.2011. 201120 En
(54) GLUCOSYLCERAMIDE SYNTHASE INHIBITION FOR THE TREATMENT OF COLLAPSING GLOMERULOPATHY AND OTHER GLOMERULAR DISEASE
(71) Genzyme Corporation, 500 Kendall Street, Cambridge, MA 02142, US
(72) IBRAGHIMOV-BESKROVNAYA, Oxana, 3 Blendon Woods Drive, Southborough, MA 01772, US;
NATOLI, Thomas, A., 80 Cambridge Road, No. 28, Woburn, MA 01801, US
(74) Ricker, Mathias, et al, Wallinger Ricker Schlotter Foerstl, Patent- und Rechtsanwälte, Zweibrückenstrasse 5-7, 80331 München, DE

---

(51) (8) **EP 2094262 ***
A 61K 31/33
A 61K 31/453
A 61K 9/32
A 61P 3/10
A 61P 3/04
A 61K 31/353
A 61K 31/34
(30) KR 27.11.2006. 20060117685
KR 11.10.2007. 20070102478
(86) PCT/KR2007006010 26.11.2007.
(96) EP 07834305.0 26.11.2007. En
(87) WO2008066296 05.06.2008. 200823
(97) EP 2094262 02.09.2009. 200936 En
(54) PHARMACEUTICAL COMPOSITION CONTAINING PHENANTHRENEQUINONE-BASED COMPOUND FOR INTESTINE DELIVERY SYSTEM
(71) Mazence Inc., No 217, Taesan-Sigma Ville, 936, Dunsan-dong, Seo-gu, Daejeon 302-120, KR;
KT & G Co., Ltd., 100, Pyongchon-dong, Daedeog-gu, Daejeon 306-712, KR
(72) JO, In Geun, 405-701, Dujeong 4-cha prugio Apt., 666, Dujeong-dong, Cheonan-si, Chungcheongnam-do 330-210, KR;
YOO, Sang-Ku, 601-203, Jugong Apt., Byeolyang-dong, Gwacheon-si, Gyeonggi-do 427-040, KR;
PARK, Myung-gyu, 105-601, Daemyung Apt., Youngduk-dong, Giheung-gu, Yongin-si, Gyeonggi-do 446-908, KR;
KWAK, Taehwan, 103-503, Seogeunaemaeul SK Apt., 700, Seocheon-dogn, Giheung-gu, Yongin-si, Gyeonggi-do 449-906, KR
(74) HOFFMANN EITLE, Patent- und Rechtsanwälte, Arabellastraße 4, 81925 München, DE

---

(51) (8) **EP 2099448 ***
A 61K 31/33
A 61K 31/453
A 61K 9/32
A 61P 3/10
A 61P 3/04
A 61K 31/353
A 61K 31/34
(30) KR 27.11.2006. 20060117685
KR 24.10.2007. 20070107041
(86) PCT/KR2007006011 26.11.2007.
(96) EP 07834306.8 26.11.2007. En
(87) WO2008066297 05.06.2008. 200823
(97) EP 2099448 16.09.2009. 200938 En
(54) PHARMACEUTICAL COMPOSITION FOR TREATMENT AND PREVENTION OF RESTENOSIS
(71) Mazence Inc., No 217, Taesan-Sigma Ville, 936, Dunsan-dong, Seo-gu, Daejeon 302-120, KR;
KT & G Co., Ltd., 100, Pyongchon-dong, Daedeog-gu, Daejeon 306-712, KR
(72) KWAK, Taehwan, 103-503, Seogeunaemaeul SK Apt., 700, Seocheon-dogn, Giheung-gu, Yongin-si, Gyeonggi-do 449-906, KR;
YOO, Sang-Ku, 601-203, Jugong Apt., Byeolyang-dong, Gwacheon-si, Gyeonggi-do 427-040, KR;
PARK, Myung-gyu, 105-601, Daemyung Apt., Youngduk-dong, Giheung-gu, Yongin-si, Gyeonggi-do 446-908, KR

(74) HOFFMANN EITLE, Patent- und Rechtsanwälte, Arabellastraße 4, 81925 München, DE

(51) (8) **EP 2099449 ***
A 61K 31/33
A 61K 31/453
A 61K 9/32
A 61P 3/10
A 61P 3/04
A 61K 31/353
A 61K 31/34
(30) KR 27.11.2006. 20060117685
KR 29.06.2007. 20070065163
(86) PCT/KR2007006013 26.11.2007.
(96) EP 07834308.4 26.11.2007. En
(87) WO2008066299 05.06.2008. 200823
(97) EP 2099449 16.09.2009. 200938 En
(54) PHARMACEUTICAL COMPOSITION FOR THE TREATMENT AND PREVENTION OF DISEASES INVOLVING IMPOTENCE
(71) Mazence Inc., No 217, Taesan-Sigma Ville, 936, Dunsan-dong, Seo-gu, Daejeon 302-120, KR;
KT & G Co., Ltd., 100, Pyongchon-dong, Daedeog-gu, Daejeon 306-712, KR
(72) KWAK, Taehwan, 103-503, Seogeunaemaeul SK Apt., 700, Seocheon-dogn, Giheung-gu, Yongin-si, Gyeonggi-do 449-906, KR;
YOO, Sang-Ku, 601-203, Jugong Apt., Byeolyang-dong, Gwacheon-si, Gyeonggi-do 427-040, KR;
PARK, Myung-gyu, 105-601, Daemyung Apt., Youngduk-dong, Giheung-gu, Yongin-si, Gyeonggi-do 446-908, KR
(74) HOFFMANN EITLE, Patent- und Rechtsanwälte, Arabellastraße 4, 81925 München, DE

(51) (8) **EP 2101757 ***
A 61K 31/33
A 61K 31/453
A 61K 9/32
A 61P 3/10
A 61P 3/04
A 61K 31/353
A 61K 31/34
(30) KR 27.11.2006. 20060117685
KR 01.11.2007. 20070111183
(86) PCT/KR2007006012 26.11.2007.
(96) EP 07834307.6 26.11.2007. En
(87) WO2008066298 05.06.2008. 200823
(97) EP 2101757 23.09.2009. 200939 En
(54) COMPOUND FOR TREATMENT OR PREVENTION OF PROSTATE-RELATED DISEASES AND PHARMACEUTICAL COMPOSITION OF COLON DELIVERY SYSTEM CONTAINING THE SAME
(71) Mazence Inc., No 217, Taesan-Sigma Ville, 936, Dunsan-dong, Seo-gu, Daejeon 302-120, KR;
KT & G Co., Ltd., 100, Pyongchon-dong, Daedeog-gu, Daejeon 306-712, KR
(72) KWAK, Taehwan, 103-503, Seogeunaemaeul SK Apt., 700, Seocheon-dogn, Giheung-gu, Yongin-si, Gyeonggi-do 449-906, KR;
YOO, Sang-Ku, 601-203, Jugong Apt., Byeolyang-dong, Gwacheon-si, Gyeonggi-do 427-040, KR;
PARK, Myung-gyu, 105-601, Daemyung Apt., Youngduk-dong, Giheung-gu, Yongin-si, Gyeonggi-do 446-908, KR
(74) HOFFMANN EITLE, Patent- und Rechtsanwälte, Arabellastraße 4, 81925 München, DE

(51) (8) **EP 2280702 ***
A 61K 31/343
A 61P 9/04
(30) FR 24.06.2008. 0803525
US 18.04.2008. 45995 P
(86) PCT/IB2009005605 16.04.2009.
(96) EP 09754179.1 16.04.2009. En
(87) WO2009144551 03.12.2009. 200949
(97) EP 2280702 09.02.2011. 201106 En
(54) USE OF DRONEDARONE OR A PHARMACEUTICALLY ACCEPTABLE SALT THEREOF, FOR THE PREPARATION OF A MEDICAMENT FOR REGULATING THE POTASSIUM LEVEL IN THE BLOOD
(71) Sanofi-Aventis, 174 Avenue de France, 75013 Paris, FR
(72) RADZIK, Davide, c/o Sanofi-Aventis, Patent Department, 174 avenue de France, 75013 Paris, FR;
VAN EICKELS, Martin, c/o Sanofi-Aventis Deutschland GmbH, 65926 Frankfurt, DE;
HAMDANI, Nacéra, c/o Sanofi-Aventis, Patent Department, 174 Avenue de France, 75013 Paris, FR;
GAUDIN, Christophe, c/o Sanofi-Aventis, Patent Department, 174 Avenue de France, 75013 Paris, FR
(74) Bouron, Estelle, et al, Sanofi-Aventis, Département Brevets, 174, avenue de France, 75013 Paris, FR

(51) (8) **EP 2300001 ***
A 61K 31/343
A 61P 9/06
(30) EP 10.06.2008. 08290531
US 10.06.2008. 60263 P
(86) PCT/IB2009006106 08.06.2009.
(96) EP 09762063.7 08.06.2009. En
(87) WO2009150535 17.12.2009. 200951
(97) EP 2300001 30.03.2011. 201113 En
(54) DRONEDARONE FOR THE PREVENTION OF PERMANENT ATRIAL FIBRILLATION
(71) Sanofi-Aventis, 174 Avenue de France, 75013 Paris, FR
(72) GAUDIN, Christophe, Patent Department, c/o Sanofi-Aventis, 174 Avenue de France, F-75013 Paris, FR;
HAMDANI, Nacéra, Patent Department, c/o Sanofi-Aventis, 174 Avenue de France, F-75013 Paris, FR;
RADZIK, Davide, Patent Department, c/o Sanofi-Aventis, 174 Avenue de France, F-75013 Paris, FR;
VAN EICKELS, Martin, Patent Department, c/o Sanofi-Aventis Deutschland GmbH, 65926 Frankfurt, DE
(74) Bouron, Estelle, Sanofi-Aventis, Département Brevets, 174, avenue de France, 75013 Paris, FR

(51) (8) **EP 2303259 ***
A 61K 31/343
A 61P 9/06
(30) EP 10.06.2008. 08290532
US 10.06.2008. 60260 P
(86) PCT/IB2009006089 08.06.2009.
(96) EP 09762062.9 08.06.2009. En
(87) WO2009150534 17.12.2009. 200951
(97) EP 2303259 06.04.2011. 201114 En
(54) DRONEDARONE FOR THE PREVENTION OF CARDIOVERSION

(71) Sanofi-Aventis, 174 avenue de France, 75013 Paris, FR
(72) GAUDIN, Christophe, c/o Sanofi-Aventis, Département Brevets, 174 avenue de France, F-75013 Paris, FR;
HAMDANI, Nacéra, c/o Sanofi-Aventis, Département Brevets, 174 avenue de France, F-75013 Paris, FR;
RADZIK, Davide, c/o Sanofi-Aventis, Département Brevets, 174 avenue de France, F-75013 Paris, FR;
VAN EICKELS, Martin, c/o Sanofi-Aventis Deutschland GmbH, 65926 Frankfurt, DE
(74) Bouron, Estelle, Sanofi-Aventis, Département Brevets, 174, avenue de France, 75013 Paris, FR

(51) (8) **EP 2320890 ***
A 61K 31/381
A 61P 39/02
(30) RO 08.09.2008. 200800692
(86) PCT/RO2009000011 13.08.2009.
(96) EP 09821416.6 13.08.2009. En
(87) WO2010062205 03.06.2010. 201022
(97) EP 2320890 18.05.2011. 201120 En
(54) INDICATION OF USE OF ERDOSTEINE AS ANTIDOTE IN A LARGE NUMBER OF INTOXICATIONS, ESPECIALLY IN HEAVY METALS LIKE LEAD OR MERCURY, AND PARACETAMOL
(71) Rafifarm S.R.L., 147135 Draganesti-Vlasca, Judet Teleorman, RO
(72) PERETTO, Marco, Calea Calarasilor nr. 3 apt. 58, Sector 3, Bucuresti, RO;
SARBULESCU, Cristina, Str. C.A. Rosetti nr. 37, Sector 1, Bucuresti, RO;
VOICU, Victor, Str. C.A. Rosetti nr. 37, Sector 1, Bucuresti, RO
(74) Long, Giorgio, et al, Jacobacci & Partners S.p.A., Via Senato 8, 20121 Milano, IT

(51) (8) **EP 2303262 ***
A 61K 31/40
A 61K 31/4025
A 61K 31/403
A 61K 31/4375
A 61K 31/4439
A 61K 31/4985
A 61K 31/5025
A 61K 31/506
A 61K 31/513
A 61K 31/522
A 61P 1/16
A 61P 21/00
(30) EP 03.06.2008. 08157512
US 08.08.2008. 87349 P
EP 06.02.2009. 09152297
US 17.02.2009. 153074 P
(86) PCT/EP2009056722 02.06.2009.
(96) EP 09757506.2 02.06.2009. En
(87) WO2009147125 10.12.2009. 200950
(97) EP 2303262 06.04.2011. 201114 En
(54) DPP-IV INHIBITORS FOR USE IN THE TREATMENT OF NAFLD
(71) Boehringer Ingelheim International GmbH, Binger Straße 173, 55216 Ingelheim am Rhein, DE
(72) KLEIN, Thomas, Boehringer Ingelheim GmbH, CD Patents, Binger Str. 173, 55216 Ingelheim Am Rhein, DE;
MARK, Michael, Boehringer Ingelheim GmbH, CD Patents, Binger Str. 173, 55216 Ingelheim Am Rhein, DE;
NIESSEN, Heiko, Boehringer Ingelheim GmbH, CD Patents, Binger Str. 173, 55216 Ingelheim Am Rhein, DE;
THOMAS, Leo, Boehringer Ingelheim GmbH, CD Patents, Binger Str. 173, 55216 Ingelheim Am Rhein, DE
(74) Hammann, Heinz, et al, Boehringer Ingelheim Pharma GmbH & Co. KG, Binger Strasse 173, 55216 Ingelheim am Rhein, DE

(51) (8) **EP 2298297**
A 61K 31/4045
A 61K 31/55
A 61K 45/06
A 61P 9/12
(30) FR 21.12.2005. 0513006
(96) EP 10011132.7 20.12.2006. Fr
(97) EP 2298297 23.03.2011. 201112 Fr
(54) Combination of an inhibitor of the If current of the sinus node and an inhibitor of the angiotensin converting enzyme
(71) Les Laboratoires Servier, 35, rue de Verdun, 92284 Suresnes Cedex, FR
(72) Benatar, Vidal, 111, rue des Tennerolles, 92210 Saint-Cloud, FR;
Lerebours-Pigeonnire, 28, avenue de l'Europe, 92300 Levallois-Perret, FR
(74) Bestel, Delphine, Les Laboratoires Servier, Direction Brevets, 35 rue de Verdun, 92284 Suresnes Cedex, FR

(51) (8) **EP 2300004 ***
A 61K 31/415
A 61K 31/4155
A 61K 31/426
A 61P 25/28
A 61P 25/16
A 61P 35/00
(30) US 15.05.2008. 53513 P
(86) PCT/US2009044186 15.05.2009.
(96) EP 09747702.0 15.05.2009. En
(87) WO2009140621 19.11.2009. 200947
(97) EP 2300004 30.03.2011. 201113 En
(54) COMPOSITIONS AND METHODS RELATING TO HEAT SHOCK TRANSCRIPTION FACTOR ACTIVATING COMPOUNDS AND TARGETS THEREOF
(71) Duke University, 2812 Erwin Road, Suite 306, Durham, NC 27705, US
(72) THIELE, Dennis, J., 2705 Creek Riadge Lane, Chapel Hill, NC 27514, US;
NEEF, Daniel, W., 3 Addison Court, Durham, NC 27712, US
(74) Witte, Weller & Partner, Phoenixbau, Königstrasse 5, 70173 Stuttgart, DE

(51) (8) **EP 2310010 ***
A 61K 31/426
A 61K 31/427
A 61P 35/00
C 07D 277/34
(30) US 02.07.2008. 77639 P
US 02.06.2009. 183278 P
(86) PCT/GB2009050773 02.07.2009.
(96) EP 09772849.7 02.07.2009. En

(87) WO2010001169 07.01.2010. 201001
(97) EP 2310010 20.04.2011. 201116 En
(54) CHEMICAL COMPOUNDS 251
(71) AstraZeneca AB, 151 85 Södertälje, SE
(72) DAKIN, Leslie, AstraZeneca R&D Boston, 35 Gatehouse Drive, Waltham, Massachusetts 02451, US;
DOWLING, James, Edward, Astrazeneca R&D Boston, 35 Gatehouse Drive, Waltham, Massachusetts 02451, US;
LAMB, Michelle, AstraZeneca R&D Boston, 35 Gatehouse Drive, Waltham, Massachusetts 02451, US;
READ, Jon, AstraZeneca R&D Boston, 35 Gatehouse Drive, Waltham, Massachusetts 02451, US;
SU, Qibin, AstraZeneca R&D Boston, 35 Gatehouse Drive, Waltham, Massachusetts 02451, US;
ZHENG, Xiaolan, AstraZeneca R&D Boston, 35 Gatehouse Drive, Waltham, Massachusetts 02451, US

(51) (8) **EP 2293793 ***
A 61K 31/437
A 61P 21/00
C 07D 471/04
(30) GB 22.05.2008. 0809314
(86) PCT/EP2009003645 22.05.2009.
(96) EP 09749649.1 22.05.2009. En
(87) WO2009141159 26.11.2009. 200948
(97) EP 2293793 16.03.2011. 201111 En
(54) 2,5-DISUBSTITUTED IMIDAZO[4,5-C]PYRIDINES FOR TREATING MUSCULAR DYSTROPHY
(71) BioMarin IGA Limited, Dominion House, 60 Montrose Avenue, Nassau, BS
(72) WYNNE, Graham, Michael, 91 Milton Park, Abingdon, Oxfordshire OX14 4RY, GB;
JOHNSON, Peter, David, 91 Milton Park, Abingdon, Oxfordshire OX14 4RY, GB;
PRICE, Paul, Damien, 91 Milton Park, Abingdon, Oxfordshire OX14 4RY, GB;
LECCI, Cristina, 91 Milton Park, Abingdon, Oxfordshire OX14 4RY, GB
(74) Cooke, Richard Spencer, et al, Elkington and Fife LLP, Prospect House, 8 Pembroke Road, Sevenoaks, Kent TN13 1XR, GB

(51) (8) **EP 2296650 ***
A 61K 31/437
(30) US 16.05.2008. 53947
(86) PCT/US2009043874 14.05.2009.
(96) EP 09747530.5 14.05.2009. En
(87) WO2009140447 19.11.2009. 200947
(97) EP 2296650 23.03.2011. 201112 En
(54) IMMUNOMODULATION BY IAP INHIBITORS
(71) Novartis AG, Lichtstrasse 35, 4056 Basel, CH;
Dana Farber Cancer Institute, Inc., Office of Patent Counsel, 44 Binney Street, Boston MA 02115, US
(72) ZAWEL, Leigh, 55 winter street, Arlington, MA 02474, US;
DRANOFF, Glenn, 28 Outlook Drive, Lexingtton, MA 02421, US;
DOUGAN, Michael, 1788 Beacon Street, Apt. 1A, Brookline, MA 02445, US;
STRAUB, Christopher, S., 16 Heritage Lane, Stow, MA 01775, US;
FIRESTONE, Brant, G., 5 Lodgehill Road, Apt. 2, Hyde Park, MA 02136, US
(74) Clyde-Watson, Zöe, D Young & Co LLP, 120 Holborn, London EC1N 2DY, GB

(51) (8) **EP 2303268 ***
A 61K 31/437
A 61K 31/4709
A 61K 31/496
A 61K 31/573
A 61K 38/08
A 61P 19/02
(30) IT 11.07.2008. MI20081264
(86) PCT/EP2009004847 03.07.2009.
(96) EP 09793880.7 03.07.2009. En
(87) WO2010003601 14.01.2010. 201002
(97) EP 2303268 06.04.2011. 201114 En
(54) PHARMACEUTICAL COMPOSITIONS BASED ON KININ B2 RECEPTOR ANTAGONISTS AND CORTICOSTEROIDS, AND THEIR USE
(71) Istituto Luso Farmaco d'Italia S.p.A., Via Walter Tobagi, 8, 20068 Peschiera Borromeo, IT
(72) GIULIANI, Sandro, Via Carlo Borrani 11, I-50012 Bagno, Ripoli (FI), IT;
MAGGI, Carlo, Alberto, Borgo Tegolaio 15, I-50125 Firenze, IT
(74) Banfi, Paolo, Bianchetti Bracco Minoja S.r.l., Via Plinio, 63, 20129 Milano, IT

(51) (8) **EP 2320895 ***
A 61K 31/437
A 61K 31/506
A 61K 31/519
A 61K 31/5377
A 61K 31/5383
A 61K 31/55
C 07D 471/04
C 07D 487/04
C 07D 487/10
C 07D 498/04
C 07D 498/14
C 07D 491/107
A 61P 35/00
(30) US 03.07.2008. 134047
(86) PCT/US2009049637 02.07.2009.
(96) EP 09774582.2 02.07.2009. En
(87) WO2010003133 07.01.2010. 201001
(97) EP 2320895 18.05.2011. 201120 En
(54) CDK MODULATORS
(71) Exelixis, Inc., 210 East Grand Avenue, P.O. Box 511, South San Francisco, CA 94083-0511, US
(72) BAHCECI, Suleyman, 2355 Holland Street, San Mateo, CA 94403, US;
CHAN, Bryan, 2 Lilly Lane, San Carlos, CA 94070, US;
CHAN, Diva, Sze-ming, 8 Captain Drive, E257, Emeryville, CA 94608, US;
CHEN, Jeff, 140 S. Van Ness Ave., Apt 407, San Francisco, CA 94103, US;
FORSYTH, Timothy, Patrick, 1928 Wingate Way, Hayward, CA 94541, US;
FRANZINI, Maurizio, 342 Roble Avenue, Redwood City, CA 94061, US;
JAMMALAMADAKA, Vasu, 2806 Maria Street, Pleasonton, CA 94588, US;

JEONG, Joon, Won, 729 Old Country Road, Apt. 1, Belmont, CA 94002, US;
JONES, Lisa, Renee, 2108 Cipriani Blvd., Belmont, CA 94002, US;
KELLEY, Ryan, Michael, 77 Paloma Avenue, Apt. 36, Pacifica, CA 94044, US;
KIM, Moon, Hwan, 1128 Oregon Avenue, Palo Alto, CA 94303, US;
LEAHY, James, W., 1185 Camellia Court, San Leandro, CA 94577, US;
MAC, Morrison, B., 2567 30th Avenue, San Francisco, CA 94116, US;
NOGUCHI, Robin, Tammie, 5213 Shelter Creek Lane, San Bruno, CA 94066, US;
RAO, Pallavi, 100 E Middlefield Rd, Apt 6c, Mountain View, CA 94043, US;
RIDGWAY, Brian, Hugh, 2827 Hallmark Drive, Belmont, CA 94002, US;
XU, Wei, 327 Glasgow Circle, Danville, CA 94526, US;
WANG, Yong, 465 Biscayne Avenue, Foster City, CA 94404, US
(74) Main, Malcolm Charles, Murgitroyd & Company, Scotland House, 165-169 Scotland Street, GB-Glasgow G5 8PL, GB

(51) (8) **EP 2318001** *
A 61K 31/44
(30) US 18.07.2008. 82162
(86) PCT/US2009051052 17.07.2009.
(96) EP 09798829.9 17.07.2009. En
(87) WO2010009433 21.01.2010. 201003
(97) EP 2318001 11.05.2011. 201119 En
(54) MODIFIED RELEASE FORMULATION AND METHODS OF USE
(71) Valeant Pharmaceuticals International, One Enterprise, Aliso Viejo, CA 92656, US
(72) NADJSOMBATI, Biljana, 4491 Sandburg Way, Irvine, CA 92612, US
(74) Ritter, Thomas Kurt, Jones Day, Prinzregentenstraße 11, 80538 München, DE

(51) (8) **EP 2303270** *
A 61K 31/4402
A 61K 31/38
A 61K 31/16
A 61P 9/00
A 61P 29/00
C 07D 333/80
C 07D 333/32
C 07C 323/19
C 07C 235/54
C 07C 235/84
C 07C 323/62
C 07D 213/64
C 07D 277/56
(30) EP 05.05.2008. 08290427
US 24.11.2008. 117336 P
(86) PCT/EP2009002917 22.04.2009.
(96) EP 09741809.9 22.04.2009. En
(87) WO2009135590 12.11.2009. 200946
(97) EP 2303270 06.04.2011. 201114 En
(54) ACYLAMINO-SUBSTITUTED FUSED CYCLOPENTANECARBOXYLIC ACID DERIVATIVES AND THEIR USE AS PHARMACEUTICALS
(71) Sanofi-Aventis, 174 avenue de France, 75013 Paris, FR
(72) SCHAEFER, Matthias, c/o Sanofi-Aventis Deutschland GmbH, 65926 Frankfurt am Main, DE;
PERNERSTORFER, Josef, c/o Sanofi-Aventis Deutschland GmbH, 65926 Frankfurt am Main, DE;
KADEREIT, Dieter, c/o Sanofi-Aventis Deutschland GmbH, 65926 Frankfurt am Main, DE;
STROBEL, Hartmut, c/o Sanofi-Aventis Deutschland GmbH, 65926 Frankfurt am Main, DE;
CZECHTIZKY, Werngard, c/o Sanofi-Aventis Deutschland GmbH, 65926 Frankfurt am Main, DE;
CHEN, L., Charlie, c/o Sanofi-Aventis, 1041 Route 202-206, Mail Code: BWD-303A, Bridgewater, NJ 08807, US;
SAFAROVA, Alena, c/o Sanofi-Aventis, 1041 Route 202-206, Mail Code: BWD-303A, Bridgewater, NJ 08807, US;
WEICHSEL, Aleksandra, c/o Sanofi-Aventis, 1041 Route 202-206, Mail Code: BWD-303A, Bridgewater NJ 08807, US;
PATEK, Marcel, c/o Sanofi-Aventis, 1041 Route 202-206, Mail Code: BWD-303A, Bridgewater NJ 08807, US
(74) Kujath, Eckard, et al, Sanofi-Aventis Deutschland GmbH, Patent- und Lizenzabteilung, Industriepark Höchst, Gebäude K 801, 65926 Frankfurt am Main, DE

(51) (8) **EP 2308491**
A 61K 31/4412
A 61P 11/00
(30) US 04.12.2009. 266753 P
US 08.01.2010. 684543
(96) EP 10250378.6 03.03.2010. En
(97) EP 2308491 13.04.2011. 201115 En
(54) Pirfenidone therapy and inducers of cytochrome P450
(71) Intermune, Inc., 3280 Bayshore Boulevard, Brisbane, CA 94005-1021, US
(72) Bradford, Williamson Ziegler, PO Box 566, Ross, California 94957, US;
Szwarcberg, Javier, 2173 Bunker Hill Drive, San Mateo, California 94402, US
(74) Pilkington, Stephanie Joan, et al, Potter Clarkson LLP, Park View House, 58 The Ropewalk, Nottingham, NG1 5DD, GB

(51) (8) **EP 2301543**
A 61K 31/45
A 61P 3/10
(30) CN 20.06.2008. 200810031546
(86) PCT/CN2008071950 11.08.2008.
(96) EP 08783943.7 11.08.2008. Zh
(87) WO2009152665 23.12.2009. 200952
(97) EP 2301543 30.03.2011. 201113 En
(54) A PHARMACEUTICAL COMPOSITION FOR TREATING DIABETES
(71) Hill Pharmaceutical Co., Ltd, Fenghuangyuan E.D.Z., Yongzhou, Hunan 425000, CN
(72) ZHOU, Yingjun, 412 Shaoshan Middle Rd., Lizishan Community, Yuhua, Changsha, Hunan 410008, CN;
ZENG, Guangyao, E Zone, Lushan Mingyuan, Huangniling Community, Yuelu, Changsha, Hunan 410013, CN;
JIANG, Meixiang, 108 Shuguang South Rd., Furong, Changsha, Human 410007, CN
(74) Grünecker, Kinkeldey, Stockmair & Schwanhäusser, Anwaltssozietät, Leopoldstrasse 4, 80802 München, DE

(51) (8) **EP 2300009** *
A 61K 31/485
A 61K 31/765
A 61P 1/00
A 61P 25/04
(30) US 07.05.2008. 126868 P
(86) PCT/US2009002856 07.05.2009.
(96) EP 09743073.0 07.05.2009. En
(87) WO2009137086 12.11.2009. 200946
(97) EP 2300009 30.03.2011. 201113 En
(54) ORAL ADMINISTRATION OF PERIPHERALLY-ACTING OPIOID ANTAGONISTS
(71) Nektar Therapeutics, 201 Industrial Road, San Carlos, CA 94070, US
(72) BRODBECK, Kevin, J., 2383 South Court Street, Palo Alto, CA 94301, US;
KUGLER, Alan, R., 1250 Sunshine Valley Road, Montara, CA 94037-0961, US
(74) Steinrud, Henrik, AstraZeneca AB, Global Intellectual Property, 151 85 Södertälje, SE

(51) (8) **EP 2308494**
A 61K 31/485
A 61K 9/22
(30) EP 27.01.2006. 06001754
(96) EP 10191037.0 25.01.2007. En
(97) EP 2308494 13.04.2011. 201115 En
(54) Tamper resistant dosage forms
(71) Euro-Celtique S.A., 2, avenue Charles de Gaulle, 1653 Luxembourg, LU
(72) Fleischer, Wolfgang, Posener Strasse 6, 55218, Ingelheim, DE;
Leuner, Christian, Blauwiesenweg 65, 60439, Frankfurt, DE;
Scherer, Sabine, Lubentiusstraße 2, 65553, Limburg-Dietkirchen, DE
(74) Maiwald Patentanwalts GmbH, Elisenhof, Elisenstrasse 3, 80335 München, DE

(51) (8) **EP 2311458**
A 61K 31/485
A 61K 9/22
(30) EP 27.01.2006. 06001754
(96) EP 10191038.8 25.01.2007. En
(97) EP 2311458 20.04.2011. 201116 En
(54) Tamper resistant dosage forms
(71) Euro-Celtique S.A., 2, avenue Charles de Gaulle, 1653 Luxembourg, LU
(72) Fleischer, Wolfgang, Posener Strasse 6, 55218, Ingelheim, DE;
Leuner, Christian, Blauwiesenweg 65, 60439, Frankfurt, DE;
Scherer, Sabine, Lubentiusstraße 2, 65553, Limburg-Dietkirchen, DE
(74) Bühler, Dirk, Maiwald Patentanwalts GmbH, Elisenhof, Elisenstraße 3, 80335 München, DE

(51) (8) **EP 2311459**
A 61K 31/485
A 61K 9/22
A 61K 9/32
(30) US 25.08.2006. 840244 P
(96) EP 10192627.7 24.08.2007. En
(97) EP 2311459 20.04.2011. 201116 En
(54) Tamper resistant oral pharmaceutical dosage forms comprising an opioid analgesic
(71) Purdue Pharma L.P., One Stamford Forum, 201 Tresser Boulevard, Stamford, CT 06901-3431, US
(72) Mannion, Richard Owen, 3860 Green Ridge Road, Furlong, PA 18925, US;
Huang, Haiyong Hugh, 33 Ketley Place, Princeton, NJ 08540, US;
McKenna, William Henry, 10 Longmeadow Road, Yonkers, NY 10704, US;
O'Donnell, Edward, P., 38 Chestnut Court, Basking Ridge, NJ 07920, US
(74) Maiwald Patentanwalts GmbH, Elisenhof, Elisenstrasse 3, 80335 München, DE

(51) (8) **EP 2293795** *
A 61K 31/496
A 61K 31/519
A 61P 35/00
A 61P 3/10
A 61P 17/06
A 61P 19/02
A 61P 25/02
A 61P 9/00
A 61P 11/06
A 61P 27/02
A 61P 1/16
A 61P 43/00
(30) EP 06.06.2008. 08157749
US 08.07.2008. 78882 P
(86) PCT/EP2009056891 04.06.2009.
(96) EP 09757599.7 04.06.2009. En
(87) WO2009147218 10.12.2009. 200950
(97) EP 2293795 16.03.2011. 201111 En
(54) PHARMACEUTICAL COMBINATION
(71) Boehringer Ingelheim International GmbH, Binger Straße 173, 55216 Ingelheim am Rhein, DE
(72) STEFANIC, Martin Friedrich, Boehringer Ingelheim GmbH, CD Patents, Binger Str. 173, 55216 Ingelheim Am Rhein, DE;
HILBERG, Frank, Boehringer Ingelheim GmbH, CD Patents, Binger Str. 173, 55216 Ingelheim Am Rhein, DE;
KAISER, Rolf, Boehringer Ingelheim GmbH, CD Patents, Binger Str. 173, 55216 Ingelheim Am Rhein, DE;
SHAPIRO, David, 5 Research Parkway, Wallingford, Connecticut 06492, US
(74) Hammann, Heinz, et al, Boehringer Ingelheim GmbH, CD-Patents, Binger Straße 173, 55216 Ingelheim am Rhein, DE

(51) (8) **EP 2296659** *
A 61K 31/4965
(30) WO 05.06.2008. PCT/EP2008/057011
WO 05.06.2008. PCT/EP2008/056983
WO 05.06.2008. PCT/EP2008/057008
WO 06.06.2008. PCT/EP2008/057060
EP 05.12.2008. 08170780
(86) PCT/EP2009056800 03.06.2009.
(96) EP 09757551.8 03.06.2009. En
(87) WO2009147170 10.12.2009. 200950
(97) EP 2296659 23.03.2011. 201112 En
(54) DRUG COMBINATIONS COMPRISING A DGAT INHIBITOR AND A PPAR-AGONIST

(71) Janssen Pharmaceutica, N.V., Turnhoutseweg 30, 2340 Beerse, BE
(72) LINDERS, Joannes, Theodorus, Maria, c/o Janssen Pharmaceutica NV, Turnhoutseweg 30, B-2340 Beerse, BE;
ROEVENS, Peter, Walter, Maria, c/o Janssen Pharmaceutica NV, Turnhoutseweg 30, B-2340 Beerse, BE;
HRUPKA, Brian, Joel, c/o Janssen Pharmaceutica NV, Turnhoutseweg 30, B-2340 Beerse, BE
(74) Vervoort, Liesbeth, et al, J&J Patent Law Department Beerse, Janssen Pharmaceutica N.V., Turnhoutseweg 30, 2340 Beerse, BE

(51) (8) **EP 2310012 ***
A 61K 31/497
(30) US 30.06.2008. 76752 P
(86) PCT/US2009049027 29.06.2009.
(96) EP 09774225.8 29.06.2009. En
(87) WO2010002774 07.01.2010. 201001
(97) EP 2310012 20.04.2011. 201116 En
(54) PROCESS FOR THE PREPARATION OF SUBSTITUTED PYRIMIDINE DERIVATIVES
(71) Janssen Pharmaceutica N.V., Turnhoutseweg 30, 2340 Beerse, BE
(72) CESCO-CANCIAN, Sergio, 4108 Shannon, Bethlehem, PA 18020, US;
CHEN, Hongfeng, 5521 Limeric Circle 33, Wilmington, DE 19808, US;
GRIMM, Jeffrey, S., 64 Country Squire Way, Somerville, NJ 08876, US;
MANI, Neelakandha, S., 13109 Russet Leaf Lane, San Diego, CA 92129, US;
MAPES, Christopher, M., 8255 Pasadena Avenue, La Mesa, CA 91941-5223, US;
PALMER, David, C., 605 Covered Bridge Lane, Doylestown, PA 18901-2050, US;
PIPPEL, Daniel, J., 13106 Caminito Mar Villa, Del Mar, CA 92014, US;
SORGI, Kirk, L., 2543 Red Gate Drive, Doylestown, PA 18902, US;
XIAO, Tong, 202 West Locust Avenue, Edison, NJ 08820, US
(74) Warner, James Alexander, Carpmaels & Ransford, One Southampton Row, London, WC1B 5HA, GB

(51) (8) **EP 2303274 ***
A 61K 31/4995
A 61K 45/06
A 61P 35/00
(30) EP 16.05.2008. 08380154
(86) PCT/EP2009055978 18.05.2009.
(96) EP 09745841.8 18.05.2009. En
(87) WO2009138509 19.11.2009. 200947
(97) EP 2303274 06.04.2011. 201114 En
(54) MULTIPLE MYELOMA TREATMENTS
(71) Pharma Mar S.A., Avda. de los Reyes, 1, Polígono Industrial La Mina-Norte, 28770 Colmenar Viejo Madrid, ES
(72) OCIO, Enrique, Centro de Investigación del Cáncer, (Universidad de Salamanca - CSIC), Campus Universitario Miguel de Unamuno s/n, E-37007 Salamanca, ES;
PANDIELLA, Atanasio, Centro de Investigación del Cáncer, (Universidad de Salamanca - CSIC), Campus Universitario Miguel de Unamuno s/n, E-37007 Salamanca, ES;
SAN MIGUEL, Jesús, Centro de Investigación del Cáncer, (Universidad de Salamanca - CSIC), Campus Universitario Miguel de Unamuno s/n, E-37007 Salamanca, ES;
AVILÉS MARÍN, Pablo Manuel, Avda. de los Reyes 1, Polígono Industrial La Mina-Norte, E-28770 Colmenar Viejo - Madrid, ES
(74) ABG Patentes, S.L., Avenida de Burgos 16D, Edificio Euromor, 28036 Madrid, ES

(51) (8) **EP 2310014 ***
A 61K 31/505
(30) US 10.07.2008. 170633
(86) PCT/US2009049913 08.07.2009.
(96) EP 09795107.3 08.07.2009. En
(87) WO2010006032 14.01.2010. 201002
(97) EP 2310014 20.04.2011. 201116 En
(54) TRICYCLIC COMPOUNDS HAVING ANTIMITOTIC AND/OR ANTITUMOR ACTIVITY AND METHODS OF USE THEREOF
(71) Duquesne University of the Holy Ghost, 600 Forbes Avenue, Pittsburgh, PA 15282, US
(72) GANGJEE, Aleem, 3855 Oakbrook Court, Allison Park, PA 15101, US
(74) Grünecker, Kinkeldey, Stockmair & Schwanhäusser, Anwaltssozietät, Leopoldstrasse 4, 80802 München, DE

(51) (8) **EP 2061468 ***
A 61K 31/506
(30) US 11.09.2006. 843730 P
US 20.03.2007. 895901 P
(86) PCT/US2007077970 10.09.2007.
(96) EP 07863389.8 10.09.2007. En
(87) WO2008033746 20.03.2008. 200812
(97) EP 2061468 27.05.2009. 200922 En
(54) TYROSINE KINASE INHIBITORS CONTAINING A ZINC BINDING MOIETY
(71) Curis, Inc., 4 Maguire Road, Lexington, MA 02421, US
(72) CAI, Xiong, 26 Concord Ave., Belmont, MA 02478, US;
QIAN, Changgeng, 163 Old Connecticut Path, Wayland, MA 01778, US;
GOULD, Stephen, 265 Highland Avenue, San Carlos, CA 94070, US;
ZHAI, Haixiao, 283 South Road, Bedford, MA 01730, US
(74) Stevens, Ian Edward, et al, Potter Clarkson LLP, Park View House, 58 The Ropewalk, Nottingham, NG1 5DD, GB

(51) (8) **EP 2136809 ***
A 61K 31/506
(30) US 20.03.2007. 895910 P
(86) PCT/US2007077972 10.09.2007.
(96) EP 07842113.8 10.09.2007. En
(87) WO2008115263 25.09.2008. 200839
(97) EP 2136809 30.12.2009. 200953 En
(54) RAF KINASE INHIBITORS CONTAINING A ZINC BINDING MOIETY
(71) Curis, Inc., 4 Maguire Road, Lexington, MA 02421, US
(72) CAI, Xiong, 26 Concord Ave., Belmont, MA 02478, US;
QIAN, Changgeng, 163 Old Connecticut Path, Wayland, MA 01778, US;
GOULD, Stephen, 265 Highland Avenue, San Carlos, CA 94070, US;
ZHAI, Haixiao, 283 South Road, Bedford, MA 01730, US

(74) Stevens, Ian Edward, Potter Clarkson LLP, Park View House, 58 The Ropewalk, Nottingham, NG1 5DD, GB

(51) (8) **EP 2315592 ***
A 61K 31/506
A 61P 9/12
(30) US 13.08.2008. 88382 P
US 30.03.2009. 164501 P
(86) PCT/US2009053358 11.08.2009.
(96) EP 09791358.6 11.08.2009. En
(87) WO2010019540 18.02.2010. 201007
(97) EP 2315592 04.05.2011. 201118 En
(54) TREATMENT OF PULMONARY ARTERIAL HYPERTENSION
(71) Novartis AG, Lichtstrasse 35, 4056 Basel, CH
(72) PASCOE, Steve, 6 Rue Du Chateau, Hagenthal Le Bas, F-68220 Alsace, FR;
QUINN, Deborah, 65 Fox Hill Road, Nahan, MA 01908, US
(74) Roth, Peter Richard, Novartis Pharma AG, Patent Department, CH-4002 Basel, CH

(51) (8) **EP 2303276 ***
A 61K 31/517
A 61P 35/00
(30) US 13.05.2008. 52706 P
US 03.11.2008. 110637 P
(86) PCT/GB2009050496 11.05.2009.
(96) EP 09746098.4 11.05.2009. En
(87) WO2009138781 19.11.2009. 200947
(97) EP 2303276 06.04.2011. 201114 En
(54) FUMARATE SALT OF 4- (3-CHLORO-2-FLUOROANILINO) -7-METHOXY-6- { [1- (N-METHYLCARBAMOYLMETHYL) PIPERIDIN- 4-YL]OXY}QUINAZOLINE
(71) AstraZeneca AB, 151 85 Södertälje, SE
(72) BOARDMAN, Kay, Alison, AstraZeneca, Charter Way, Macclesfield, Cheshire SK10 2NA, GB;
BURNS, Susan, Elizabeth, AstraZeneca, Charter Way, Macclesfield, Cheshire SK10 2NA, GB;
DOBSON, Andrew, Hornby, AstraZeneca, Charter Way, Macclesfield, Cheshire SK10 2NA, GB;
WHITLOCK, Brian, AstraZeneca, Charter Way, Macclesfield, Cheshire SK10 2NA, GB

(51) (8) **EP 2063895 ***
A 61K 31/519
A 61K 31/565
A 61K 31/5377
A 61K 31/337
A 61K 31/704
A 61K 31/4745
A 61K 31/505
A 61K 31/517
A 61K 31/395
A 61P 35/00
(30) JP 06.10.2006. 2006275841
JP 07.03.2007. 2007057902
(86) PCT/JP2007070026 05.10.2007.
(96) EP 07829761.1 05.10.2007. En
(87) WO2008044782 17.04.2008. 200816
(97) EP 2063895 03.06.2009. 200923 En
(54) COMBINATION DRUG
(71) Takeda Pharmaceutical Company Limited, 1-1, Doshomachi 4-chome, Chuo-ku, Osaka-shi, Osaka 541-0045, JP
(72) OHTA, Yoshikazu, TAKEDA PHARMACEUTICAL COMPANY LIMITED, 10, Wadai, Tsukuba-shi, Ibaraki 300-4293, JP;
TAMURA, Toshiya, TAKEDA PHARMACEUTICAL COMPANY LIMITED, 10, Wadai, Tsukuba-shi, Ibaraki 300-4293, JP;
TAKAGI, Shinji, TAKEDA PHARMACEUTICAL COMPANY LIMITED, 10, Wadai, Tsukuba-shi, Ibaraki 300-4293, JP
(74) Jones, Nicholas Andrew, Withers & Rogers LLP, Goldings House, 2 Hays Lane, London, SE1 2HW, GB

(51) (8) **EP 2296663 ***
A 61K 31/519
A 61K 31/455
A 61P 35/00
(30) EP 20.06.2008. 08382022
(86) PCT/EP2009004404 18.06.2009.
(96) EP 09765623.5 18.06.2009. En
(87) WO2009153043 23.12.2009. 200952
(97) EP 2296663 23.03.2011. 201112 En
(54) COMBINATIONS COMPRISING METHOTREXATE AND DHODH INHIBITORS
(71) Almirall, S.A., Ronda General Mitre 151, 08022 Barcelona, ES
(72) GODESSART MARINA, Nuria, C/ Joan Guell 38-42, Esc., Derecha 3r-1a, E-08028 Barcelona, ES;
PIZCUETA LALANZA, Maria, Pilar, C/ DR. Roux 5, Entlo., E-08017 Barcelona, ES
(74) Srinivasan, Ravi Chandran, J.A. Kemp & Co., 14 South Square, Gray's Inn, London WC1R 5JJ, GB

(51) (8) **EP 2320905 ***
A 61K 31/522
C 07D 473/16
C 07D 473/18
A 61P 29/00
(30) US 11.08.2008. 87773 P
(86) PCT/EP2009060267 07.08.2009.
(96) EP 09781608.6 07.08.2009. En
(87) WO2010018134 18.02.2010. 201007
(97) EP 2320905 18.05.2011. 201120 En
(54) NOVEL ADENINE DERIVATIVES
(71) Smithkline Beecham Corporation, One Franklin Plaza, PO Box 7929, Philadelphia, PA 19101, US
(72) BAZIN-LEE, Helene, GlaxoSmithKline Biologicals, 553 Old Corvallis Road, Hamilton, Montana 59840, US;
COE, Diane, Mary, GlaxoSmithKline, Gunnels Wood Road, Stevenage, Hertfordshire, SG1 2NY, GB;
LAZARIDES, Linos, GlaxoSmithKline, Gunnels Wood Road, Stevenage, Hertfordshire, SG1 2NY, GB;
MITCHELL, Charlotte, Jane, GlaxoSmithKline, Gunnels Wood Road, Stevenage, Hertfordshire, SG1 2NY, GB;
SMITH, Stephen, Allan, GlaxoSmithKline, Gunnels Wood Road, Stevenage, Hertfordshire, SG1 2NY, GB;
TRIVEDI, Naimisha, GlaxoSmithKline, Gunnels Wood Road, Stevenage, Hertfordshire, SG1 2NY, GB

(74) Povey, Alexander W.G., GlaxoSmithKline, Corporate Intellectual Property, (CN9.25.1), 980 Great West Road, Brentford, Middlesex TW8 9GS, GB

(51) (8) **EP 2310016** *
A 61K 31/54
(30) US 05.08.2008. 86406 P
US 26.11.2008. 118088 P
US 18.06.2009. 218311 P
(86) PCT/US2009052754 04.08.2009.
(96) EP 09805466.1 04.08.2009. En
(87) WO2010017236 11.02.2010. 201006
(97) EP 2310016 20.04.2011. 201116 En
(54) PDE10 INHIBITORS AND RELATED COMPOSITIONS AND METHODS
(71) Omeros Corporation, 1420 Fifth Avenue, Suite 2600, Seattle, WA 98101, US
(72) CUTSHALL, Neil, S., 3817 165th Avenue Southeast, Snohomish, WA 98290, US;
GAGE, Jennifer, Lynn, 15318 62nd Place Northeast, Kenmore, WA 98028, US;
WHEELER, Neil, Thomas, 8605 Wood Lawn Drive, Raleigh, NC 27613, US
(74) Grünecker, Kinkeldey, Stockmair & Schwanhäusser, Anwaltssozietät, Leopoldstrasse 4, 80802 München, DE

(51) (8) **EP 2318008** *
A 61K 31/54
(30) US 09.01.2009. 143553 P
US 18.07.2008. 135273 P
(86) PCT/US2009050875 16.07.2009.
(96) EP 09798761.4 16.07.2009. En
(87) WO2010009332 21.01.2010. 201003
(97) EP 2318008 11.05.2011. 201119 En
(54) BINDING AND INHIBITING 5-HT4 RECEPTOR
(71) Immune Control, Inc., Tower Bridge, Suite 400, 200 Barr Harbor Drive, West Conshohocken, PA 19428, US
(72) ROTH, Stephen, 1105 Rose Glen Road, Gladwyne, PA 19036, US;
ZOPF, David, 560 West Beechtree Lane, Wayne, PA 19087, US
(74) Grünecker, Kinkeldey, Stockmair & Schwanhäusser, Anwaltssozietät, Leopoldstrasse 4, 80802 München, DE

(51) (8) **EP 2311464**
A 61K 31/553
C 07D 281/02
(30) US 25.08.2005. 212413
(96) EP 11151905.4 17.08.2006. En
(97) EP 2311464 20.04.2011. 201116 En
(54) Agents for preventing and treating disorders involving modulation of the ryr receptors
(71) The Trustees of Columbia University in the City of, New York, 412 Low Memorial Library, 535 West 116th Street, New York, New York 10027, US
(72) Marks, Andrew Robert, 12 Locust Avenue, Larchmont, NY 10538, US;
Landry, Donald W, 29 Claremont Avenue, Apt. 2s, New York, NY 10027, US;
Deng, Shixian, 33D Hillside Terrace, White Plains, NY 10601, US;
Cheng, Zhen Zhuang, 60-51 Woodhaven Boulevard, 1st Floor, Elmhurst, NY 11373, US;
Lehnart, Stephan E, 324 West 113 Street, Apartment 1A, New York, NY 10026, US
(74) Lawrence, John, et al, Barker Brettell LLP, 100 Hagley Road, Edgbaston, Birmingham, West Midlands B16 8QQ, GB

(51) (8) **EP 2263676**
A 61K 31/58
A 61P 31/12
(30) TW 16.06.2009. 098120040
TW 28.10.2009. 098136423
(96) EP 10153974.0 18.02.2010. En
(97) EP 2263676 22.12.2010. 201051 En
(54) Compositions for inhibiting or treating Hepatitis C viruses
(71) Industrial Technology Research Institute, 195 Chung Hsing Road, Sec. 4, Chutung, Hsinchu 31040, TW
(72) Lee, Lain-Tze, No. 137, Simen St. East District, 300, Hsinchu City, TW;
Chang, Shau-Feng, 2F., No. 43, Lane 42 Dongguang Rd. East District, 30069, Hsinchu City, TW;
Tsai, Hui-Ping, 5F., No. 54, Lane 155 Sec. 2 Kuang-Fu Rd., Hsinchu City, TW;
Kuo, Zong-Keng, 1F., No. 1 Alley 3, Lane 40 Minli St., 23548, Zhonghe City, TW;
Chung, Chen-Fang, No. 12, Zhongxin 3rd Ln. Hokou Township, 30353, Hsinchu County, TW
(74) Fuchs, Patentanwälte, Westhafenplatz 1, 60327 Frankfurt am Main, DE

(51) (8) **EP 2073816** *
A 61K 31/69
A 61P 29/00
(30) US 10.10.2006. 850520 P
(86) PCT/US2007021626 10.10.2007.
(96) EP 07870774.2 10.10.2007. En
(87) WO2008063300 29.05.2008. 200822
(97) EP 2073816 01.07.2009. 200927 En
(54) BORONIC ACIDS AND ESTERS AS INHIBITORS OF FATTY ACID AMIDE HYDROLASE
(71) Infinity Pharmaceuticals, Inc., 780 Memorial Drive, Cambridge MA 02139, US
(72) ADAMS, Julian, 673 Boylston Street, Boston, MA 02116, US;
BEHNKE, Mark L., 122 North Street, Somerville, MA 02144, US;
CASTRO, Alfredo C., 43 Wildwood Street, Winchester, MA 01890, US;
EVANS, Catherine A., 83 Jaques Street, Somerville, MA 02145, US;
GRENIER, Louis, 140 Sargent Street, Newton, MA 02458, US;
GROGAN, Michael J., 27 Dunster Road, Winchester, MA 01890, US;
LIU, Tao, 15 Sherborne Circle, Ashland, MA 01721, US;
SNYDER, Daniel A., 373 Highland Avenue 312, Somerville, MA 02144, US;
TIBBITTS, Thomas T., 67 Graniteville Road, Westford, MA 01886-2232, US
(74) Tostmann, Holger Carl, Wallinger Ricker Schlotter Foerstl, Patent- und Rechtsanwälte, Zweibrückenstrasse 5-7, 80331 München, DE

(51) (8) **EP 2310020 ***
A 61K 31/70
A 61P 35/00
A 61K 31/7012
(30) US 11.07.2008. 79968 P
(86) PCT/US2009048675 25.06.2009.
(96) EP 09794965.5 25.06.2009. En
(87) WO2010005799 14.01.2010. 201002
(97) EP 2310020 20.04.2011. 201116 En
(54) NOVEL ACETATES OF 2-DEOXY MONOSACCHARIDES WITH ANTICANCER ACTIVITY
(71) Board of Regents, The University of Texas System, 201 West 7th Street, Austin, TX 78701, US
(72) PRIEBE, Waldemar, 4239 Emory Avenue, Houston, TX 77005, US;
CYBULSKI, Marcin, W. Turmoncka 22 M 203, PL-03-254 Warsaw, PL;
FOKT, Izabela, 7500 Kirby Drive, 1128, Houston, TX 77030, US;
SKORA, Stainslaw, 1800 El Paseo 613, Houston, TX 77054, US;
CONRAD, Charles, 15911 Harwick Drive, Spring, TX 77379, US;
MADDEN, Timothy, 1811 Bimam Glen DR., Sugar Land, TX 77479, US
(74) Adam, Holger, Kraus & Weisert, Patent- und Rechtsanwälte, Thomas-Wimmer-Ring 15, 80539 München, DE

(51) (8) **EP 2315593 ***
A 61K 31/7056
A 61P 7/02
(30) EP 18.07.2008. 08290704
EP 24.03.2009. 09290216
(86) PCT/IB2009006621 17.07.2009.
(96) EP 09786171.0 17.07.2009. En
(87) WO2010007530 21.01.2010. 201003
(97) EP 2315593 04.05.2011. 201118 En
(54) USE OF IDRABIOTAPARINUX FOR DECREASING THE INCIDENCE OF BLEEDINGS DURING AN ANTITHROMBOTIC TREATMENT
(71) Sanofi-Aventis, 174 Avenue de France, 75013 Paris, FR
(72) CARIOU, Roger, c/o sanofi-aventis, Patent Department, 174 avenue de France, F-75013 Paris, FR;
CHEW, Paul, c/o sanofi-aventis, 1041 Routes 202-206, Mail Code: D-303A, Bridgewater, NJ 08807, US;
DESTORS, Jean-Michel, c/o sanofi-aventis, Patent Department, 174 avenue de France, F-75013 Paris, FR;
PILLION, Gérard, c/o sanofi-aventis, Patent Department, 174 avenue de France, F-75013 Paris, FR;
SILVESTRE, Louise, c/o sanofi-aventis, Patent Department, 174 avenue de France, F-75013 Paris, FR
(74) Colombié, Damien, et al, Cabinet Lavoix, 2, place d'Etienne d'Orves, 75441 Paris Cedex 09, FR

(51) (8) **EP 2303283 ***
A 61K 31/7068
A 61K 31/7076
A 61K 31/513
(30) GB 15.05.2008. 0808841
GB 30.05.2008. 0809856
(86) PCT/EP2009055955 15.05.2009.
(96) EP 09745839.2 15.05.2009. En
(87) WO2009138507 19.11.2009. 200947
(97) EP 2303283 06.04.2011. 201114 En
(54) ANTI-CANCER COMBINATION THERAPY
(71) Katholieke Universiteit Leuven, K.U. Leuven R&D, Minderbroedersstraat 8a, Bus 5105, 3000 Leuven, BE
(72) BALZARINI, Jan, Kapeldreef 20, B-3001 Heverlee, BE;
LIEKENS, Sandra, Zandstraat 15A, B-3130 Begijnendijk, BE
(74) Bounaga, Sakina, et al, De Clercq & Partners cvba, Edgard Gevaertdreef 10a, 9830 Sint-Martens-Latem, BE

(51) (8) **EP 2307029 ***
A 61K 31/7088
C 12N 15/11
(30) US 02.07.2008. 77588 P
EP 02.07.2008. 08104612
(86) PCT/IB2009052860 01.07.2009.
(96) EP 09773009.7 01.07.2009. En
(87) WO2010001349 07.01.2010. 201001
(97) EP 2307029 13.04.2011. 201115 En
(54) RNA ANTAGONISTS TARGETING HSP27
(71) Santaris Pharma A/S, Kogle Alle 6, 2970 Hørsholm, DK
(72) WORM, Jesper, Viktoriagade 28 2 tv, DK-1655 Copenhagen V, DK
(74) Wroe, Stephanie, D Young & Co LLP, 120 Holborn, London, EC1N 2DY, GB

(51) (8) **EP 2315594 ***
A 61K 31/7088
A 61K 31/7105
A 61P 35/00
(30) US 30.05.2008. 57590 P
(86) PCT/US2009045406 28.05.2009.
(96) EP 09767337.0 28.05.2009. En
(87) WO2009155025 23.12.2009. 200952
(97) EP 2315594 04.05.2011. 201118 En
(54) METHODS OF TREATING A MEIOTIC KINESIN-ASSOCIATED DISEASE
(71) Dana-Farber Cancer Institute Inc., 44 Binney Street, Boston, MA 02115, US
(72) PELLMAN, David, Dana-farber Cancer Institute Inc., 44 Binney Street, Boston, MA 02115, US
(74) Harris, Jennifer Lucy, et al, Kilburn & Strode LLP, 20 Red Lion Street, London WC1R 4PJ, GB

(51) (8) **EP 2223692**
A 61K 31/713
C 12N 15/113
(30) EP 15.06.2007. 07110376
EP 13.08.2007. 07114265
(96) EP 10163499.6 13.06.2008. En
(97) EP 2223692 01.09.2010. 201035 En
(54) RNAi inhibition of alpha-ENaC expression
(71) Novartis AG, Lichtstrasse 35, 4056 Basel, CH
(72) Van Heeke, Gino, Novartis Horsham Research Centre, Wimblehurst Road, Horsham, West Sussex RH12 5AB, GB;
Hickman, Emma, Novartis Horsham Research Centre, Wimblehurst Road, Horsham, West Sussex RH12 5AB, GB;
Danahay, Henry Luke, Novartis Horsham Research Centre, Wimblehurst Road, Horsham, West Sussex RH12 5AB, GB;
Tan, Pamela, Kalte Marter 8, 95326 Kulmbach, DE;
Geick, Anke, Holderlin-Anlage 12, 95447 Bayreuth, DE;

Vornlocher, Hans-Peter, Albert-Einstein-Ring 43a, 95448 Bayreuth, DE
(74) Kassow, Anders, et al, Novartis Pharma AG, Patent Department, 4002 Basel, CH

(51) (8) **EP 2223693**
A 61K 31/713
C 12N 15/113
(30) EP 15.06.2007. 07110376
EP 13.08.2007. 07114265
(96) EP 10163500.1 13.06.2008. En
(97) EP 2223693 01.09.2010. 201035 En
(54) RNAi inhibition of alpha-ENaC expression
(71) Novartis AG, Lichtstrasse 35, 4056 Basel, CH
(72) Van Heeke, Gino, Novartis Horsham Research Centre, Wimblehurst Road, Horsham, West Sussex RH12 5AB, GB; Hickman, Emma, Novartis Horsham Research Centre, Wimblehurst Road, Horsham, West Sussex RH12 5AB, GB; Danahay, Henry Luke, Novartis Horsham Research Centre, Wimblehurst Road, Horsham, West Sussex RH12 5AB, GB; Tan, Pamela, Kalte Marter 8, 95326 Kulmbach, DE; Geick, Anke, Holderlin-Anlage 12, 95447 Bayreuth, DE; Vornlocher, Hans-Peter, Albert-Einstein-Ring 43a, 95448 Bayreuth, DE
(74) Kassow, Anders, et al, Novartis Pharma AG, Patent Department, 4002 Basel, CH

(51) (8) **EP 2223694**
A 61K 31/713
C 12N 15/113
(30) EP 15.06.2007. 07110376
EP 13.08.2007. 07114265
(96) EP 10163501.9 13.06.2008. En
(97) EP 2223694 01.09.2010. 201035 En
(54) RNAi inhibition of alpha-ENaC expression
(71) Novartis AG, Lichtstrasse 35, 4056 Basel, CH
(72) Van Heeke, Gino, Novartis Horsham Research Centre, Wimblehurst Road, Horsham, West Sussex RH12 5AB, GB; Hickman, Emma, Novartis Horsham Research Centre, Wimblehurst Road, Horsham, West Sussex RH12 5AB, GB; Danahay, Henry Luke, Novartis Horsham Research Centre, Wimblehurst Road, Horsham, West Sussex RH12 5AB, GB; Tan, Pamela, Kalte Marter 8, 95326 Kulmbach, DE; Geick, Anke, Holderlin-Anlage 12, 95447 Bayreuth, DE; Vornlocher, Hans-Peter, Albert-Einstein-Ring 43a, 95448 Bayreuth, DE
(74) Kassow, Anders, et al, Novartis Pharma AG, Patent Department, 4002 Basel, CH

(51) (8) **EP 2223695**
A 61K 31/713
C 12N 15/113
(30) EP 15.06.2007. 07110376
EP 13.08.2007. 07114265
(96) EP 10163502.7 13.06.2008. En
(97) EP 2223695 01.09.2010. 201035 En
(54) RNAi inhibition of alpha-ENaC expression
(71) Novartis AG, Lichtstrasse 35, 4056 Basel, CH
(72) Van Heeke, Gino, Novartis Horsham Research Centre, Wimblehurst Road, Horsham, West Sussex RH12 5AB, GB; Hickman, Emma, Novartis Horsham Research Centre, Wimblehurst Road, Horsham, West Sussex RH12 5AB, GB; Danahay, Henry Luke, Novartis Horsham Research Centre, Wimblehurst Road, Horsham, West Sussex RH12 5AB, GB; Tan, Pamela, Kalte Marter 8, 95326, Kulmbach, DE; Geick, Anke, Holderlin-Anlage 12, 95447, Bayreuth, DE; Vornlocher, Hans-Peter, Albert-Einstein-Ring 43a, 95448, Bayreuth, DE
(74) Kassow, Anders, Novartis Pharma AG, Patent Department, 4002 Basel, CH

(51) (8) **EP 2079475 ***
A 61K 31/7135
H 01L 31/048
H 01L 23/10
(30) US 06.10.2006. 849882 P
(86) PCT/US2007021492 04.10.2007.
(96) EP 07852576.3 04.10.2007. En
(87) WO2008045382 17.04.2008. 200816
(97) EP 2079475 22.07.2009. 200930 En
(54) A sealed photovoltaic apparatus
(71) Solyndra, Inc., 47700 Kato Road, Fremont CA 94538, US
(72) CUMPSTON, Brian, 47700 Kato Road, Fremont, CA 94538, US
(74) Zeller, Andreas, Jones Day, Rechtsanwälte Attorneys-at-Law Patentanwälte, Prinzregentenstrasse 11, 80538 München, DE

(51) (8) **EP 2307031 ***
A 61K 31/722
A 61K 47/36
A 61K 31/506
A 61K 31/56
A 61K 31/585
(30) EP 04.08.2008. 08161757
(86) PCT/EP2009059807 29.07.2009.
(96) EP 09804542.0 29.07.2009. En
(87) WO2010015556 11.02.2010. 201006
(97) EP 2307031 13.04.2011. 201115 En
(54) FILM-FORMING LIQUID FORMULATIONS FOR DRUG RELEASE TO HAIR AND SCALP
(71) Polichem SA, 50, Val Fleuri, 1526 Luxembourg, LU
(72) MAILLAND, Federico, Strada Regina 10, CH-6900 Lugano, CH;
MURA, Emanuela, Via Bellinzona 76, I-22100 Como, IT
(74) Pistolesi, Roberto, et al, Dragotti & Associati Srl, Via Marina 6, 20121 Milano, IT

(51) (8) **EP 2303287 ***
A 61K 31/731
A 61P 11/06
A 61P 27/14
A 61P 37/08
(30) US 01.07.2008. 129507 P
(86) PCT/EP2009004696 30.06.2009.
(96) EP 09772137.7 30.06.2009. En
(87) WO2010000437 07.01.2010. 201001
(97) EP 2303287 06.04.2011. 201114 En
(54) ANTIALLERGIC MARINE BIOPOLYMERS
(71) Marinomed Biotechnologie GmbH, Veterinärplatz 1, 1210 Vienna, AT
(72) GRASSAUER, Andreas, Kraygasse 94/2/8, A-1220 Vienna, AT;
PRIESCHL-GRASSAUER, Eva, Kraygasse 94/2/8, A-1220 Vienna, AT

(74) Bogensberger, Burkhard, et al, Bogensberger Patent- & Markenbüro, Im Aescherle 1, FL-9494 Schaan, LI

(51) (8) **EP 2303289 ***
A 61K 33/26
A 61K 33/00
A 61K 31/4439
A 61P 1/00
A 61P 7/06
(30) GB 15.05.2008. 0808835
(86) PCT/GB2009001231 14.05.2009.
(96) EP 09746078.6 14.05.2009. En
(87) WO2009138761 19.11.2009. 200947
(97) EP 2303289 06.04.2011. 201114 En
(54) MONO (IRON HYDROXYPYRONE) AND COMBINATION (IRON HYDROXYPYRONE AND GI INFLAMMATION INHIBITING AGENTS) COMPOSITIONS FOR ANAEMIA OR H. PYLORI INFECTIONS
(71) Iron Therapeutics Holdings AG, Sihleggstrasse 23, 8832 Wollerau, CH
(72) STOCKHAM, Michael Arthur, "Baltroy" Stickling Green, Clavering, Saffron Walden, Essex CB11 4QX, GB
(74) Simpson, Mark Geoffrey, Potter Clarkson LLP, Park View House, 58 The Ropewalk, Nottingham, NG1 5DD, GB

(51) (8) **EP 2300023 ***
A 61K 35/28
A 61K 35/48
A 61K 35/76
A 61K 45/06
C 12N 7/00
C 12N 15/00
A 61P 35/00
(30) US 16.05.2008. 54025 P
(86) PCT/US2009003061 15.05.2009.
(96) EP 09747007.4 15.05.2009. En
(87) WO2009139921 19.11.2009. 200947
(97) EP 2300023 30.03.2011. 201113 En
(54) MICROORGANISMS FOR PREVENTING AND TREATING NEOPLASMS ACCOMPANYING CELLULAR THERAPY
(71) Genelux Corporation, 3030 Bunker Hill Street, Suite 310, San Diego, California 92109, US
(72) SZALAY, Aladar, A., 7704 North Folk Rd., Highland, CA 92346, US
(74) Baldock, Sharon Claire, Boult Wade Tennant, Verulam Gardens, 70 Gray's Inn Road, London WC1X 8BT, GB

(51) (8) **EP 2293805 ***
A 61K 36/185
A 61K 36/68
A 61P 11/00
(30) DE 30.06.2008. 202008008532 U
(86) PCT/EP2009002913 22.04.2009.
(96) EP 09776551.5 22.04.2009. De
(87) WO2010003472 14.01.2010. 201002
(97) EP 2293805 16.03.2011. 201111 De
(54) LOZENGE COMPOSITION FOR TREATING INFLAMMATORY DISEASES OF THE MOUTH AND PHARYNX
(71) Maria Clementine Martin Klosterfrau, Vertriebsgesellschaft mbH, Gereonsmühlengasse 1-11, 50670 Köln, DE
(72) PLOCH, Michael, Havelkorso 129, OT Lehnitz, 16515 Oranienburg, DE
(74) Strehlke, Ingo Kurt, Gesthuysen, von Rohr & Eggert, Postfach 10 13 54, 45013 Essen, DE

(51) (8) **EP 2083842 ***
A 61K 38/00
C 07K 2/00
(30) US 27.09.2006. 847423 P
(86) PCT/US2007020595 24.09.2007.
(96) EP 07838741.2 24.09.2007. En
(87) WO2008039415 03.04.2008. 200814
(97) EP 2083842 05.08.2009. 200932 En
(54) ANALOGS OF GHRELIN SUBSTITUTED AT THE N-TERMINAL
(71) IPSEN PHARMA S.A.S., 65, quai Georges Gorse, 91200 Boulogne-Billancourt, FR
(72) DONG, Zheng Xin, 66 Fairview Street, Holliston MA 01746, US
(74) Harrison Goddard Foote, 106 Micklegate, York, YO1 6JX, GB

(51) (8) **EP 2101802 ***
A 61K 38/00
C 07K 14/705
C 07K 7/08
(30) US 13.12.2006. 874694 P
US 11.12.2007. 1258
(86) PCT/US2007025389 12.12.2007.
(96) EP 07862798.1 12.12.2007. En
(87) WO2008076275 26.06.2008. 200826
(97) EP 2101802 23.09.2009. 200939 En
(54) INHIBITING COLLAGEN-INDUCED PLATELET AGGREGATION AND ACTIVATION WITH PEPTIDE VARIANTS
(71) UNIVERSITY OF MASSACHUSETTS MEDICAL SCHOOL, 300 South Street, Suite 400, Shrewsbury, MA 01545-4169, US
(72) SIGALOV, Alexander B., 61 Frank Street, Apt. 36, Worcester, MA 01604, US
(74) Glawe, Delfs, Moll, Patent- und Rechtsanwälte, Rothenbaumchaussee 58, 20148 Hamburg, DE

(51) (8) **EP 2300035 ***
A 61K 38/00
(30) US 20.08.2008. 90448 P
US 17.06.2008. 73274 P
US 10.02.2009. 151349 P
US 03.07.2008. 78171 P
(86) PCT/US2009047447 16.06.2009.
(96) EP 09800752.9 16.06.2009. En
(87) WO2010011439 28.01.2010. 201004
(97) EP 2300035 30.03.2011. 201113 En
(54) GIP-BASED MIXED AGONISTS FOR TREATMENT OF METABOLIC DISORDERS AND OBESITY
(71) Indiana University Research and Technology, Corporation, 351 West 10th Street, Indianapolis, IN 46202, US
(72) DIMARCHI, Richard, D., 10890 Wilmington Drive, Carmel, IN 46033, US;

MA, Tao, 1002 East Atwater Avenue, Bloomington, IN 47401, US
(74) Ponti Sales, Adelaida, Oficina Ponti, C. Consell de Cent 322, 08007 Barcelona, ES

(51) (8) **EP 2310028 ***
A 61K 38/00
A 61P 35/00
A 61P 5/00
(30) GB 12.06.2008. 0810785
GB 12.06.2008. 0810782
GB 14.11.2008. 0820884
GB 17.11.2008. 0820965
(86) PCT/GB2009050665 11.06.2009.
(96) EP 09762018.1 11.06.2009. En
(87) WO2009150469 17.12.2009. 200951
(97) EP 2310028 20.04.2011. 201116 En
(54) SUPPRESSION OF NEUROENDOCRINE DISEASES
(71) Syntaxin Limited, Units 4-10 The Quadrant, Barton Lane, Abingdon, Oxfordshire OX14 3YS, GB
(72) JOHNSTONE, Stephen, Syntaxin Limited, Units 4-10 The Quadrant, Barton Lane, Abingdon, Oxfordshire OX14 3YS, GB;
MARKS, Philip, Syntaxin Limited, Units 4-10 The Quadrant, Barton Lane, Abingdon, Oxfordshire OX14 3YS, GB;
FOSTER, Keith, Syntaxin Limited, Units 4-10 The Quadrant, Barton Lane, Abingdon, Oxfordshire OX14 3YS, GB
(74) MacLean, Martin Robert, et al, Mathys & Squire LLP, 120 Holborn, London, EC1N 2SQ, GB

(51) (8) **EP 2310029 ***
A 61K 38/00
C 12N 9/00
A 61P 35/00
(30) GB 12.06.2008. 0810782
GB 17.11.2008. 0820965
(86) PCT/GB2009050666 11.06.2009.
(96) EP 09762019.9 11.06.2009. En
(87) WO2009150470 17.12.2009. 200951
(97) EP 2310029 20.04.2011. 201116 En
(54) SUPPRESSION OF CANCERS
(71) Syntaxin Limited, Units 4-10 The Quadrant, Barton Lane, Abingdon, Oxfordshire OX14 3YS, GB
(72) MADEC, Frederic, Syntaxin Limited, Units 4-10, The Quadrant, Barton Lane, Abingdon Oxon OX14 3YS, GB;
LECANE, Phil, Syntaxin Limited, Units 4-10, The Quadrant, Barton Lane, Abingdon Oxon OX14 3YS, GB;
MARKS, Philip, Syntaxin Limited, Units 4-10, The Quadrant, Barton Lane, Abingdon Oxon OX14 3YS, GB;
FOSTER, Keith, Syntaxin Limited, Units 4-10, The Quadrant, Barton Lane, Abingdon Oxon OX14 3YS, GB
(74) MacLean, Martin Robert, et al, Mathys & Squire LLP, 120 Holborn, London, EC1N 2SQ, GB

(51) (8) **EP 2320923 ***
A 61K 38/00
(30) US 02.12.2008. 200628 P
US 07.08.2008. 188192 P
(86) PCT/US2009004543 07.08.2009.
(96) EP 09805288.9 07.08.2009. En
(87) WO2010016935 11.02.2010. 201006
(97) EP 2320923 18.05.2011. 201120 En
(54) TRUNCATED ANALOGUES OF GLUCOSE-DEPENDENT INSULINOTROPIC POLYPEPTIDE
(71) IPSEN PHARMA S.A.S., 65, quai Georges Gorse, 91200 Boulogne-Billancourt, FR
(72) DONG, Zheng, Xin, 66 Fairview Street, Holliston, MA 01746, US;
SHEN, Yeelana, 5 Crystal Pond Lane, Franklin, MA 02038, US;
DEOLIVEIRA, Daniel, B., 279 Center St., Bellingham, MA 02019, US
(74) Harrison Goddard Foote, 4th Floor, Merchant Exchange, 17-19 Whitworth Street West, Manchester M1 5WG, GB

(51) (8) **EP 2310032 ***
A 61K 38/08
A 61P 25/16
A 61P 25/28
C 07K 16/18
(30) AT 12.06.2008. 9522008
AT 12.06.2008. 9512008
(86) PCT/AT2009000237 12.06.2009.
(96) EP 09761154.5 12.06.2009. En
(87) WO2009149487 17.12.2009. 200951
(97) EP 2310032 20.04.2011. 201116 En
(54) COMPOUNDS FOR TREATING SYMPTOMS ASSOCIATED WITH PARKINSON'S DISEASE
(71) Affiris AG, Karl-Farkas-Gasse 22, 1030 Wien, AT
(72) MANDLER, Markus, Dieselgasse 5/115, A-1100 Vienna, AT;
MATTNER, Frank, Sieveringerstrasse 190, A-1190 Vienna, AT;
SCHMIDT, Walter, Böcklinstrasse 19, A-1020 Vienna, AT
(74) Alge, Daniel, Sonn & Partner Patentanwälte, Riemergasse 14, 1010 Wien, AT

(51) (8) **EP 2310033 ***
A 61K 38/08
A 61P 25/16
A 61P 25/28
C 07K 16/18
(30) AT 12.06.2008. 9522008
(86) PCT/AT2009000235 12.06.2009.
(96) EP 09761152.9 12.06.2009. En
(87) WO2009149485 17.12.2009. 200951
(97) EP 2310033 20.04.2011. 201116 En
(54) COMPOUNDS FOR TREATING AMYLOIDOSES
(71) Affiris AG, Karl-Farkas-Gasse 22, 1030 Wien, AT
(72) MANDLER, Markus, Dieselgasse 5/115, A-1100 Vienna, AT;
SANTIC, Radmila, Antonigasse 78/15, A-1180 Vienna, AT;
WENINGER, Harald, Hamiltongasse 8/3/20, A-1140 Vienna, AT;
KOPINITS, Edith, Tschadekgasse 12, A-2486 Landegg, AT
(74) Sonn & Partner Patentanwälte, Riemergasse 14, 1010 Wien, AT

(51) (8) **EP 2310034 ***
A 61K 38/08
C 07K 16/18
A 61P 27/16
A 61P 25/28
(30) AT 12.06.2008. 9512008
(86) PCT/AT2009000236 12.06.2009.

(96) EP 09761153.7 12.06.2009. En
(87) WO2009149486 17.12.2009. 200951
(97) EP 2310034 20.04.2011. 201116 En
(54) COMPOUNDS FOR TREATING BETA-AMYLOIDOSES
(71) Affiris AG, Karl-Farkas-Gasse 22, 1030 Wien, AT
(72) MANDLER, Markus, Dieselgasse 5/115, A-1100 Vienna, AT;
GIEFFERS, Christian, Blütenweg 12, 69221 Dossenheim, DE;
MATTNER, Frank, Sieveringerstrasse 190, A-1190 Vienna, AT;
DOLISCHKA, Andrea, Richtergasse 8/9, A-1070 Vienna, AT;
OTAVA, Oleksandr, Kleistgasse 3/8, A-1030 Vienna, AT
(74) Sonn & Partner Patentanwälte, Riemergasse 14, 1010 Wien, AT

(51) (8) **EP 2111867**
A 61K 38/10
A 61P 35/00
(30) US 24.04.2008. 47669 P
EP 30.04.2008. 08008292
(96) EP 09005725.8 23.04.2009. En
(97) EP 2111867 28.10.2009. 200944 En
(54) Novel formulations of tumour-associated peptides binding to human leukocyte antigen (HLA) class I or II molecules for vaccines
(71) Immatics Biotechnologies GmbH, Paul-Ehrlich-Strasse 15, 72076 Tübingen, DE
(72) Lewandrowski, Peter, Landhaushöhe 4, 72070 Tübingen-Unterjesingen, DE;
Flohr, Christian, Metzgerstr. 5, 71093 Weil im Schönbruch, DE
(74) Krauss, Jan, Forrester & Boehmert, Pettenkoferstrasse 20-22, 80336 München, DE

(51) (8) **EP 2307041** *
A 61K 38/10
A 61P 35/00
(30) US 03.06.2008. 58376 P
(86) PCT/US2009045658 29.05.2009.
(96) EP 09759115.0 29.05.2009. En
(87) WO2009148954 10.12.2009. 200950
(97) EP 2307041 13.04.2011. 201115 En
(54) DOSING REGIMEN
(71) Janssen Pharmaceutica, N.V., Turnhoutseweg 30, 2340 Beerse, BE
(72) YURKOW, Edward, J., 123 Woods Road, Hillsborough, NJ 08844, US;
SHUKLA, Umesh, 48 Hills Drive, Belle Mead, NJ 08502, US
(74) Warner, James Alexander, Carpmaels & Ransford, One Southampton Row, London, WC1B 5HA, GB

(51) (8) **EP 2307042** *
A 61K 38/10
A 61P 25/00
(30) DK 25.06.2008. 200800880
US 25.06.2008. 75627 P
(86) PCT/DK2009050143 24.06.2009.
(96) EP 09768854.3 24.06.2009. En
(87) WO2009155932 30.12.2009. 200953
(97) EP 2307042 13.04.2011. 201115 En
(54) MODULATION OF THE TRPV : VPS10P-DOMAIN RECEPTOR SYSTEM FOR THE TREATMENT OF PAIN
(71) H. Lundbeck A/S, Ottiliavej 9, 2500 Valby, DK
(72) NYKJÆR, Anders, Skolevangs Allé 1B, DK-8240 Risskov, DK;
BJERRUM, Ole J., Gartnerkrogen 59, DK-3500 Værløse, DK;
BJERGGAARD VÆGTER, Christian, Blåbærhaven 20, DK-8520 Lystrup, DK;
JANSEN, Pernille, Dunhammervej 21, DK-3600 Frederikssund, DK
(74) Conrad, Lars Sparre, et al, H. Lundbeck A/S, Ottiliavej 9, 2500 Valby, DK

(51) (8) **EP 2114431** *
A 61K 38/16
A 61P 35/00
(30) KR 28.12.2006. 20060136707
KR 29.03.2007. 20070030856
(86) PCT/KR2007006938 28.12.2007.
(96) EP 07851819.8 28.12.2007. En
(87) WO2008082182 10.07.2008. 200828
(97) EP 2114431 11.11.2009. 200946 En
(54) A COMPOSITION CONTAINING ARAZYME FOR THE PREVENTION AND TREATMENT OF CANCER
(71) Insect Biotech Co., Ltd., 461-7, Jeonmin-dong, Yuseong-gu, Daejeon 305-810, KR
(72) PARK, Ho-Yong, 402-1101 Expo Apt., Jeonmin-dong Yuseong-gu, Daejeon 305-762, KR;
SON, Kwang-Hee, 101-1303 Hanbit Apt., Eun-dong Yuseong-gu, Daejeon 305-755, KR;
SHIN, Dong-Ha, 308-1210 Chungsol Apt., Songgang-dong Yuseong-gu, Daejeon 305-752, KR;
JEONG, Kyu-Shik, 105-1203 Woobangmijin Apt., Beommul-dong Suseong-gu, Daegu 706-100, KR
(74) Kihn, Henri, et al, Office Ernest T. Freylinger S.A., 234, route d'Arlon, B.P. 48, 8001 Strassen, LU

(51) (8) **EP 2303306** *
A 61K 38/16
A 61P 13/12
A 61P 19/02
(30) US 03.06.2008. 130749 P
(86) PCT/US2009003338 02.06.2009.
(96) EP 09758730.7 02.06.2009. En
(87) WO2009148566 10.12.2009. 200950
(97) EP 2303306 06.04.2011. 201114 En
(54) DEVELOPMENT OF A C-REACTIVE PROTEIN MUTANT WITH IMPROVED THERAPEUTIC BENEFIT IN IMMUNE THROMBOCYTOPENIA AND LUPUS NEPHRITIS
(71) STC.UNM, 801 University Blvd. SE, Suite 101, Albuquerque, NM 87106, US
(72) DU CLOS, Terry, W., 521 Amherst DR. SE, Albuquerque, NM 87106, US;
MOLD, Carolyn, 521 Amherst DR. SE, Albuquerque, NM 87106, US
(74) Dall'Olio, Giancarlo, et al, Invention S.r.l., Via delle Armi 1, 40137 Bologna, IT

(51) (8) **EP 2318032 ***
A 61K 38/17
A 61P 3/00
(30) DK 26.06.2008. 200800885
(86) PCT/DK2009050151 26.06.2009.
(96) EP 09768858.4 26.06.2009. En
(87) WO2009155936 30.12.2009. 200953
(97) EP 2318032 11.05.2011. 201119 En
(54) USE OF HSP70 AS A REGULATOR OF ENZYMATIC ACTIVITY
(71) Orphazyme APS, c/o COBIS A/S, Ole Maaløes Vej 3, 2200 Copenhagen N, DK
(72) JENSEN, Thomas, Kirkegaard, Ingemannsvej 30, 4. th, DK-1964 Frederiksberg C, DK;
JAATTELA, Marja, Helena, Østerbrogade 52, 3. th, DK-2100 KøbenhavnØ, DK
(74) Høiberg A/S, St. Kongensgade 59 A, 1264 Copenhagen K, DK

(51) (8) **EP 2320928 ***
A 61K 38/17
A 61P 19/02
(30) EP 18.07.2008. 08160761
EP 15.05.2009. 09160448
(86) PCT/EP2009059255 17.07.2009.
(96) EP 09780793.7 17.07.2009. En
(87) WO2010007168 21.01.2010. 201003
(97) EP 2320928 18.05.2011. 201120 En
(54) TREATMENT OF RHEUMATOID ARTHRITIS WITH MAMMAL BETA DEFENSINS
(71) Novozymes Adenium Biotech A/S, Krogshoejvej 36, 2880 Bagsvaerd, DK
(72) KJAER, Tanja, Maria, Rosenkilde, Vestre Paradisvej 153, DK-2840 Holte, DK;
KRUSE, Thomas, Noerrebrogade 34, 4. th., DK-2200 Copenhagen N, DK;
MYGIND, Per, Holse, Boegehaven 72, DK-3500 Vaerloese, DK;
BRINCH, Karoline, Sidelmann, Hyrdeledet 9A, DK-2400 Copenhagen NV, DK;
KJAERULFF, Soeren, Skovmindevej 40, DK-2840 Holte, DK;
ANDERSEN, Birgitte, Vaerebrovej 117B, DK-2880 Bagsvaerd, DK

(51) (8) **EP 2320929 ***
A 61K 38/17
(30) EP 18.07.2008. 08160761
EP 15.08.2008. 08162486
EP 03.09.2008. 08163614
EP 15.05.2009. 09160448
(86) PCT/EP2009059251 17.07.2009.
(96) EP 09780789.5 17.07.2009. En
(87) WO2010007165 21.01.2010. 201003
(97) EP 2320929 18.05.2011. 201120 En
(54) TREATMENT OF INFLAMMATORY DISEASES WITH MAMMAL BETA DEFENSINS
(71) Novozymes Adenium Biotech A/S, Krogshoejvej 36, 2880 Bagsvaerd, DK
(72) KJAER, Tanja Maria Rosenkilde, Vestre Paradisvej 153, DK-2840 Holte, DK;
KRUSE, Thomas, Noerrebrogade 34, 4. th., DK-2200 Copenhagen N, DK;
MYGIND, Per Holse, Boegehaven 72, DK-3500 Vaerloese, DK;
BRINCH, Karoline Sidelmann, Hyrdeledet 9A, DK-2400 Copenhagen NV, DK;
KJAERULFF, Soeren, Skovmindevej 40, DK-2840 Holte, DK;
ANDERSEN, Birgitte, Vaerebrovej 117B, DK-2880 Bagsvaerd, DK

(51) (8) **EP 2320930 ***
A 61K 38/17
(30) EP 18.07.2008. 08160761
EP 15.08.2008. 08162486
EP 03.09.2008. 08163614
(86) PCT/EP2009059253 17.07.2009.
(96) EP 09780791.1 17.07.2009. En
(87) WO2010007166 21.01.2010. 201003
(97) EP 2320930 18.05.2011. 201120 En
(54) TREATMENT OF INFLAMMATORY BOWEL DISEASES WITH MAMMAL BETA DEFENSINS
(71) Novozymes Adenium Biotech A/S, Krogshoejvej 36, 2880 Bagsvaerd, DK
(72) KJAER, Tanja Maria Rosenkilde, Vestre Paradisvej 153, DK-2840 Holte, DK;
KRUSE, Thomas, Noerrebrogade 34, 4. th., DK-2200 Copenhagen N, DK;
MYGIND, Per Holse, Boegehaven 72, DK-3500 Vaerloese, DK;
BRINCH, Karoline Sidelmann, Hyrdeledet 9A, DK-Copenhagen NV 2400, DK;
KJAERULFF, Soeren, Skovmindevej 40, DK-2840 Holte, DK;
ANDERSEN, Birgitte, Vaerebrovej 117B, DK-2880 Bagsvaerd, DK

(51) (8) **EP 2228071**
A 61K 38/18
A 61K 48/00
A 61P 13/12
(30) US 14.11.2006. 599026
US 11.05.2007. 801798
US 16.05.2007. 803991
(96) EP 10165806.0 09.11.2007. En
(97) EP 2228071 15.09.2010. 201037 En
(54) Intra-vascular kidney gene therapy with plasmid encoding BMP-7
(71) Merial Limited, 3239 Satellite Blvd., Duluth, GA 30096, US
(72) Fisher, Laurent, Bernard, 17, Chemin Vert, 69110 Sainte-Foy-ls-Lyon, FR
(74) Harding, Charles Thomas, et al, D Young & Co LLP, 120 Holborn, GB-London EC1N 2DY, GB

(51) (8) **EP 2296690 ***
A 61K 38/18
C 07K 14/50
(30) US 04.06.2008. 58861 P
US 04.06.2008. 58919 P
US 27.03.2009. 164364 P
US 05.05.2009. 175736 P
(86) PCT/US2009046113 03.06.2009.
(96) EP 09759330.5 03.06.2009. En
(87) WO2009149171 10.12.2009. 200950
(97) EP 2296690 23.03.2011. 201112 En
(54) FGF21 MUTANTS AND USES THEREOF

(71) Amgen, Inc, One Amgen Center Drive, Thousand Oaks, California 91320-1799, US
(72) BELOUSKI, Edward, John, 4541 La Tuna Court, Camarillo, CA 93012, US;
ELLISON, Murielle, Marie, 645 Camino Manzanas, Thousand Oaks, CA 91360, US;
HAMBURGER, Agnes, Eva, 3885 Calle Alta Vista, Newbury Park, CA 91320, US;
HECHT, Randy, Ira, 2569 Piccadilly, Thousand Oaks, CA 91362, US;
LI, Yue-Sheng, 3025 Shadow Hill Circle, Thousand Oaks, CA 91360, US;
MICHAELS, Mark, Leo, 5007 Texhoma Avenue, Encino, CA 91316, US;
SUN, Jeonghoon, 4340 Camino De La Rosa, Thousand Oaks, CA 91320, US;
XU, Jing, 1677 Glider Court, Thousand Oaks, CA 91320, US
(74) Grünecker, Kinkeldey, Stockmair & Schwanhäusser, Anwaltssozietät, Leopoldstrasse 4, 80802 München, DE

(51) (8) **EP 2303310 ***
A 61K 38/18
A 61K 38/48
A 61P 9/00
A 61K 38/20
(30) WO 27.05.2008. PCT/US2008/006489
(86) PCT/US2009044714 20.05.2009.
(96) EP 09763198.0 20.05.2009. En
(87) WO2009151907 17.12.2009. 200951
(97) EP 2303310 06.04.2011. 201114 En
(54) COMPOSITIONS AND METHODS FOR USING CELLS TO TREAT HEART TISSUE
(71) Mayo Foundation for Medical Education and Research, 200 First Street SW, Rochester, MN 55905, US
(72) TERZIC, Andre, 803 8th Street S.W., Rochester, Minnesota 55902, US;
BEHFAR, Atta, 1121 Plummer Circle S.W., Rochester, Minnesota 55902, US
(74) Pecher, Nicolas, et al, Pecher Consultants SPRL, Centre Monnet - Avenue Jean Monnet, 1, 1348 Louvain-la-Neuve, BE

(51) (8) **EP 2318034 ***
A 61K 38/18
A 61K 38/20
A 61K 8/64
A 61P 17/02
A 61Q 19/00
(30) US 15.07.2008. 135026 P
(86) PCT/US2009004129 15.07.2009.
(96) EP 09798310.0 15.07.2009. En
(87) WO2010008573 21.01.2010. 201003
(97) EP 2318034 11.05.2011. 201119 En
(54) WOUND HEALING
(71) Thanos, Christopher, 125 Staples Rd., Cumberland, RI 02864, US;
Bintz, Briannan, 51 Front St. 344, Cumberland, RI 02864, US
(72) Thanos, Christopher, 125 Staples Rd., Cumberland, RI 02864, US;
Bintz, Briannan, 51 Front St. 344, Cumberland, RI 02864, US
(74) Helbig, Christian, Wagner + Helbig, Patentanwälte, Pfarrstrasse 14, 80538 München, DE

(51) (8) **EP 2063908 ***
A 61K 38/20
C 12N 15/00
A 61P 37/06
(30) EP 29.08.2006. 06450117
(86) PCT/EP2007007497 28.08.2007.
(96) EP 07801920.5 28.08.2007. En
(87) WO2008025507 06.03.2008. 200810
(97) EP 2063908 03.06.2009. 200923 En
(54) USE OF MODIFIED INTERLEUKIN-8 PROTEINS FOR TREATING REPERFUSION INJURY OR TRANSPLANT REJECTION
(71) Protaffin Biotechnologie AG, Impulszentrum Graz-West, Reininghausstrasse 13a, 8020 Graz, AT
(72) KUNGL, Andreas, J., Strasserhofweg 77a, 8045 Graz, AT;
BEDKE, Jens, Alte Eppelheimer Strasse 16, 69115 Heidelberg, DE;
GRÖNE, Hermann-Josef, Im Moselsgrund 17, 69118 Heidelberg, DE
(74) Redl, Gerda, REDL Life Science Patent Attorneys, Tech Gate Vienna, Donau-City-Straße 1, 1220 Vienna, AT

(51) (8) **EP 2310041 ***
A 61K 38/25
A 61P 9/00
A 61P 17/00
(30) US 13.06.2008. 61163 P
(86) PCT/EP2009057263 12.06.2009.
(96) EP 09761776.5 12.06.2009. En
(87) WO2009150214 17.12.2009. 200951
(97) EP 2310041 20.04.2011. 201116 En
(54) UNACYLATED GHRELIN AND ANALOGS AS THERAPEUTIC AGENTS FOR VASCULAR REMODELING IN DIABETIC PATIENTS AND TREATMENT OF CARDIOVASCULAR DISEASE
(71) ALIZE PHARMA, 15, Chemin Du Saquin, Espace Europeen, 69130 Ecully, FR
(72) BRIZZI, Maria Felice, Via Sappone 11, I-10133 Turin, IT;
MUCCIOLI, Giampiero, Via XX Settembre 2, I-10121 Turin, IT;
GHIGO, Ezio, D'Azeglio 22, I-10125 Turin, IT
(74) Tetaz, Franck Claude Edouard, et al, Cabinet Régimbeau, 139, rue Vendôme, 69477 Lyon Cedex 06, FR

(51) (8) **EP 2300046 ***
A 61K 38/28
A 61K 38/47
A 61P 5/50
A 61P 3/10
(30) US 09.05.2008. 127044 P
US 28.04.2008. 125835 P
(86) PCT/US2009002625 28.04.2009.
(96) EP 09739183.3 28.04.2009. En
(87) WO2009134380 05.11.2009. 200945
(97) EP 2300046 30.03.2011. 201113 En
(54) SUPER FAST-ACTING INSULIN COMPOSITIONS
(71) Halozyme, Inc., 11388 Sorrento Valley Road, San Diego, CA 92121, US
(72) FROST, Gregory, I., 13662 Mercado Drive, Del Mar, CA 92014, US;
BILINSKY, Igor, 104 Hawort St., San Diego, CA 92122, US;
VAUGHN, Daniel, 2230 14th St., Encinitas, CA 92024, US;

SUGARMAN, Barry, 7328 Celata Lane, San Diego, CA 92129, US
(74) Baldock, Sharon Claire, Boult Wade Tennant, Verulam Gardens, 70 Gray's Inn Road, London WC1X 8BT, GB

(51) (8) **EP 2101809** *
A 61K 38/43
A 61P 1/16
A 23L 1/30
(86) PCT/KR2006005835 28.12.2006.
(96) EP 06835535.3 28.12.2006. En
(87) WO2008082019 10.07.2008. 200828
(97) EP 2101809 23.09.2009. 200939 En
(54) PHARMACEUTICAL COMPOSITION CONTAINING ARAZYME FOR THE PREVENTION OF LIVER DYSFUNCTION
(71) Insect Biotech Co., Ltd., 461-7, Jeonmin-dong, Yuseong-gu, Daejeon 305-810, KR
(72) PARK, Ho-Yong, 402-1101 Expo Apt., Jeonmin-dong, Yuseong-gu, Daejeon 305-762, KR;
SON, Kwang-Hee, 101-1303 Hanbit Apt., Eun-dong, Yuseong-gu, Daejeon 305-755, KR;
SHIN, Dong-Ha, 308-1210 Chungsol Apt., Songgang-dong, Yuseong-gu, Daejeon 305-752, KR;
JEONG, Kyu-Shik, 105-1203 Woobangmijin Apt., Beommul-dong, Suseong-gu, Daegu 706-100, KR
(74) Kihn, Henri, et al, Office Ernest T. Freylinger S.A., 234, route d'Arlon, B.P. 48, 8001 Strassen, LU

(51) (8) **EP 2296694** *
A 61K 38/48
(30) US 23.04.2008. 125304 P
(86) PCT/US2009034775 20.02.2009.
(96) EP 09735447.6 20.02.2009. En
(87) WO2009131740 29.10.2009. 200944
(97) EP 2296694 23.03.2011. 201112 En
(54) NEUTRALIZING PROPROTEIN CONVERTASE SUBTILISIN KEXIN TYPE 9 (PCSK9) VARIANTS AND USES THEREOF
(71) Amgen Inc., One Amgen Center Drive, Thousand Oaks, CA 91320-1799, US
(72) JACKSON, Simon, Mark, 2071 Birch Avenue, San Carlos, CA 94070, US;
PIPER, Derek, Evan, 675 Giannini Drive, Santa Clara, CA 95051, US
(74) Grünecker, Kinkeldey, Stockmair & Schwanhäusser, Anwaltssozietät, Leopoldstrasse 4, 80802 München, DE

(51) (8) **EP 2315597** *
A 61K 39/04
C 07K 14/35
G 01N 33/569
(30) US 25.07.2008. 83692 P
(86) PCT/EP2009059586 24.07.2009.
(96) EP 09781058.4 24.07.2009. En
(87) WO2010010180 28.01.2010. 201004
(97) EP 2315597 04.05.2011. 201118 En
(54) NOVEL COMPOSITIONS AND METHODS
(71) GlaxoSmithKline Biologicals S.A., rue de l'Institut, 89, 1330 Rixensart, BE;
Glaxo Group Limited, Glaxo Wellcome House, Berkeley Avenue, Greenford, Middlesex UB6 0NN, GB
(72) BROWN, James, GlaxoSmithKline, 1250 S. Collegeville Road, P.O. Box 5089, Collegeville, PA 19426, US;
METTENS, Pascal, GlaxoSmithKline Biologicals S.A., Rue de l'Institut 89, B-1330 Rixensart, BE;
MURPHY, Dennis, c/o GlaxoSmithKline, 1250 S. Collegeville Road, P.O. Box 5089, Collegeville, PA 19426, US
(74) Dalton, Marcus Jonathan William, GlaxoSmithKline, Corporate Intellectual Property (CN9.25.1), 980 Great West Road, Brentford, Middlesex TW8 9GS, GB

(51) (8) **EP 2320945** *
A 61K 39/07
A 61K 47/00
(30) US 30.07.2008. 84833 P
US 28.01.2009. 202090 P
(86) PCT/US2009052279 30.07.2009.
(96) EP 09825156.4 30.07.2009. En
(87) WO2010053610 14.05.2010. 201019
(97) EP 2320945 18.05.2011. 201120 En
(54) STABLE ANTHRAX VACCINE FORMULATIONS
(71) Emergent Biosolutions Inc., 2273 Research Boulevard, Suite 400, Rockville, MD 20850, US
(72) KAISHEVA, Elizabet, 1000 Marina Boulevard, Brisbane, California 94005-1841, US
(74) Jappy, John William Graham, et al, Gill Jennings & Every LLP, The Broadgate Tower, 20 Primrose Street, London EC2A 2ES, GB

(51) (8) **EP 2298342**
A 61K 39/09
C 07K 14/315
G 01N 33/569
(30) EP 20.11.2006. 06024006
(96) EP 10011486.7 19.11.2007. En
(97) EP 2298342 23.03.2011. 201112 En
(54) Peptides protective against s. pneumoniae and compositions, methods and uses relating thereto
(71) Intercell AG, Campus Vienna Biocenter 6, 1030 Vienna, AT
(72) Eszter, Nagy, Westbahnstrasse 32/34 Top 12, 1070 Wien, AT
(74) Bösl, Raphael Konrad, Isenbruck Bösl Hörschler LLP, Patentanwälte, Prinzregentenstrasse 68, 81675 München, DE

(51) (8) **EP 2307047** *
A 61K 39/12
A 61P 31/12
A 61P 3/10
A 61P 19/02
(30) US 06.06.2008. 59650 P
(86) PCT/US2009046482 05.06.2009.
(96) EP 09759555.7 05.06.2009. En
(87) WO2009149397 10.12.2009. 200950
(97) EP 2307047 13.04.2011. 201115 En
(54) RESPIRATORY SYNCYTIAL VIRUS RENDERS DENDRITIC CELLS TOLEROGENIC
(71) Baylor Research Institute, Suite 125, 3434 Live Oak Street, Dallas, TX 75204, US
(72) CONNOLLY, John, E., 101 S. Walton St., Unit 113, Dallas, TX 75226, US;
BANCHEREAU, Jacques, F., 6730 Northaven Road, Dallas, TX 75230, US;
GILL, Michelle, A., 4101 Barnett Drive, Plano, TX 75024, US

(74) Sonn & Partner Patentanwälte, Riemergasse 14, 1010 Wien, AT

(51) (8) **EP 2307048 ***
A 61K 39/12
A 61K 39/395
(30) US 16.07.2008. 81234 P
(86) PCT/US2009050903 16.07.2009.
(96) EP 09798772.1 16.07.2009. En
(87) WO2010009346 21.01.2010. 201003
(97) EP 2307048 13.04.2011. 201115 En
(54) HIV VACCINE BASED ON TARGETING MAXIMIZED GAG AND NEF TO DENDRITIC CELLS
(71) Baylor Research Institute, Suite 125, 3434 Live Oak Street, Dallas, TX 75204, US
(72) BANCHEREAU, Jacques, F., 6730 Northaven Road, Dallas, TX 75230, US;
ZURAWSKI, Gerard, 7620 Jordan Lane, Midlothian, TX 76065, US;
FLAMAR, Anne-laure, 8650 Southwestern Blvd. 3914, Dallas, TX 75206, US;
COBB, Amanda, 7150 E. Grand Ave. 102, Dallas, TX 75223, US;
MEAD, Holly, 2316 Compton DR., Plano, TX 75025, US;
MONTES, Monica, 3005 Bryan St. 2313, Dallas TX 75204, GB
(74) Sonn & Partner Patentanwälte, Riemergasse 14, 1010 Wien, AT

(51) (8) **EP 2318042 ***
A 61K 39/12
A 61P 35/00
(30) US 31.07.2008. 85101 P
US 08.05.2009. 176561 P
(86) PCT/EP2009059820 29.07.2009.
(96) EP 09781248.1 29.07.2009. En
(87) WO2010012780 04.02.2010. 201005
(97) EP 2318042 11.05.2011. 201119 En
(54) VACCINE AGAINST HPV
(71) GlaxoSmithKline Biologicals S.A., rue de l'Institut, 89, 1330 Rixensart, BE
(72) DESCAMPS, Dominique, GlaxoSmithKline Biologicals S.A., Rue de l'Institut 89, B-1330 Rixensart, BE;
GIANNINI, Sandra, GlaxoSmithKline Biologicals S.A., Rue de l'Institut 89, B-1330 Rixensart, BE;
LECRENIER, Nicolas, GlaxoSmithKline Biologicals S.A., Rue de l'Institiut 89, B-1330 Rixensart, BE;
STEPHENNE, Jean, GlaxoSmithKline Biologicals S.A., Rue de l'Institut 89, B-1330 Rixensart, BE;
WETTENDORFF, Martine Anne Cecile, GlaxoSmithKline Biologicals S.A., Parc de la Noire Epine, Rue Fleming 20, B-1330 Wavre, BE
(74) Dalton, Marcus Jonathan William, GlaxoSmithKline, Corporate Intellectual Property (CN9.25.1), 980 Great West Road, Brentford, Middlesex TW8 9GS, GB

(51) (8) **EP 2303322 ***
A 61K 39/165
C 12N 15/863
C 07K 14/12
C 12N 7/01
C 12N 5/22
(30) US 20.06.2008. 74406 P
EP 01.07.2008. 08011868
(86) PCT/EP2009004094 08.06.2009.
(96) EP 09765549.2 08.06.2009. En
(87) WO2009152969 23.12.2009. 200952
(97) EP 2303322 06.04.2011. 201114 En
(54) RECOMBINANT MODIFIED VACCINIA VIRUS MEASLES VACCINE
(71) Bavarian Nordic A/S, Hejreskovvej 10 A, 3490 Kvistgaard, DK
(72) CHAPLIN, Paul, Bürgerstrasse 9, 81925 Munich, DE
(74) Pielken, Petra, et al, Bavarian Nordic GmbH, Fraunhoferstrasse 18b, 82152 Martinsried, DE

(51) (8) **EP 2293813 ***
A 61K 39/29
(30) US 23.05.2008. 55818 P
(86) PCT/US2009045183 26.05.2009.
(96) EP 09751752.8 26.05.2009. En
(87) WO2009143524 26.11.2009. 200948
(97) EP 2293813 16.03.2011. 201111 En
(54) NANOEMULSION VACCINES
(71) The Regents of the University of Michigan, 1214 S. University Avenue, 2nd Floor, Ann Arbor, MI 48104, US
(72) BAKER, James, R., Jr., 3997 Holden Drive, Ann Arbor, MI 48103, US;
BIELINSKA, Anna, U., 1652 Golden Lane, Ypsilanti, MI 48198, US;
MANK, Nicholas, J., 1421 West Huron St., Ann Arbor, MI 48103, US;
MAKIDON, Paul, E., 11670 Mason Road, Webberville, MI 48892, US;
KNOWLTON, Jessica, A., 1214 South University Avenue 2nd Floor, Ann Arbor, MI 48104, US;
BLANCO, Luz, P., 2391 Hickman Rd., Ann Arbor, MI 48105, US;
CAO, Zhengyi, 1214 South University Avenue 2nd Floor, Ann Arbor, MI 48104, US;
SCOTT, Alison, J., 1214 South University Avenue 2nd Floor, Ann Arbor, MI 48104, US;
NIGAVEKAR, Shraddha, S., 1361 Fox Pointe Circle, Ann Arbor, MI 48108, US
(74) Glawe, Delfs, Moll, Patent- und Rechtsanwälte, Rothenbaumchaussee 58, 20148 Hamburg, DE

(51) (8) **EP 2293814 ***
A 61K 39/38
(30) US 23.05.2008. 55832 P
US 13.08.2008. 88614 P
(86) PCT/US2009045185 26.05.2009.
(96) EP 09814926.3 26.05.2009. En
(87) WO2010033274 25.03.2010. 201012
(97) EP 2293814 16.03.2011. 201111 En
(54) NANOEMULSION ADJUVANTS
(71) The Regents of the University of Michigan, 1214 S. University Avenue, 2nd Floor, Ann Arbor, MI 48104, US
(72) BAKER, James, R., JR., 3997 Holden Drive, Ann Arbor, MI 48103, US;
MAKIDON, Paul, E., 11670 Mason Road, Webberville, MI 48892, US;
MANK, Nicholas, J., 1421 West Huron St., Ann Arbor, MI 48103, US;
BIELINSKA, Anna, U., 1652 Golden Lane, Ypsilanti, MI 48198, US

(74) Glawe, Delfs, Moll, Patent- und Rechtsanwälte, Rothenbaumchaussee 58, 20148 Hamburg, DE

---

(51) (8) **EP 2300052** *
A 61K 39/38
(30) US 16.06.2008. 61886 P
(86) PCT/US2009047449 16.06.2009.
(96) EP 09798415.7 16.06.2009. En
(87) WO2010008726 21.01.2010. 201003
(97) EP 2300052 30.03.2011. 201113 En
(54) NOVEL SYNERGISTIC EFFECTS
(71) ImmunoGen, Inc., 830 Winter Street, Waltham, MA 02451, US
(72) LUTZ, Robert J., 218 Old Connecticut Path, Wayland, Massachusetts 01778, US;
WHITEMAN, Kathleen R., 512 Shawsheen Avenue, Wilmington, Massachusetts 01887, US
(74) Miller, David James, et al, Mathys & Squire LLP, 120 Holborn, London EC1N 2SQ, GB

---

(51) (8) **EP 1977762**
A 61K 39/39
A 61K 39/395
A 61K 31/00
A 61K 38/00
A 61P 13/12
(30) US 11.02.2004. 544121 P
US 08.04.2004. 561018
US 09.06.2004. 578401 P
US 20.10.2004. 620802 P
(96) EP 08011905.0 11.02.2005. En
(97) EP 1977762 08.10.2008. 200841 En
(54) CTGF AS TARGET FOR THE THERAPY OF DIABETIC NEPHROPATHY
(71) Fibrogen, Inc., 409 Illinois Street, San Francisco, CA 94158, US
(72) Flyvbjerg, Allan, Asylgade 41, 8300 Odder, DK;
Guo, Guangjie, 22 Port Royal Avenue, Foster City, CA 94404, US;
Liu, David Y., 201 Ferne Avenue, Palo Alto, CA 94306, US;
Neff, Thomas B., 190 Glenwood Avenue, Atherton, CA 94027, US;
Oliver, Noelynn A., 421 Mundel Way, Los Altos, CA 94022, US;
Usinger, William R., 1056 Roderick Court, Lafayette, CA 94549, US;
Wang, Qingjian, 37 Edgewood Place, Belmont, CA 94002, US
(74) Goodfellow, Hugh Robin, et al, Carpmaels & Ransford, One Southampton Row, London, WC1B 5HA, GB

---

(51) (8) **EP 2228073**
A 61K 39/39
A 61K 39/395
(30) IT 29.06.2006. FI20060163
(96) EP 10164951.5 28.06.2007. En
(97) EP 2228073 15.09.2010. 201037 En
(54) Pharmaceutical compositions containing monoclonal anti idiotypic anti-ca-125 antibody and aluminium derivatives
(71) Menarini International Operations Luxembourg S.A., 1, Avenue de la Gare, 1611 Luxembourg, LU
(72) Flemming, Jens, Oldenfelder Strasse 32f, 22143 Hamburg, DE;
Gröger, Karsten, Wißlerstraße 23, 12587 Berlin, DE;
Schmitz, Reinhard, Flatowallee 21, 14055 Berlin, DE;
Manzini, Stefano, Via della Mattonaia, 25, 50121 Firenze, IT
(74) Gervasi, Gemma, et al, Notarbartolo & Gervasi S.p.A., Corso di Porta Vittoria 9, 20122 Milano, IT

---

(51) (8) **EP 2301576**
A 61K 39/395
C 07K 16/28
A 61P 35/00
A 61P 37/00
C 12N 5/20
(30) US 29.03.2004. 557621 P
US 29.03.2004. 557620 P
US 29.03.2004. 557622 P
US 07.05.2004. 842011
US 05.11.2004. 982357
(96) EP 10180748.5 08.11.2004. En
(97) EP 2301576 30.03.2011. 201113 En
(54) Therapeutic use of Anti-CS1 Antibodies
(71) Abbott Biotherapeutics Corp., 1500 Seaport Boulevard, Redwood City CA 94063, US
(72) Williams, Marna, 347 Ely Place, Palo Alto, CA 94306, US;
Tso, J. Jun, 445 Oak Grove Avenue 16, Menlo Park, CA 94025, US;
Landolfi, Nicolas F., 240 Gloria Circle, Palo Alto, CA 94025, US;
Liu, Gao, 1135 Phyllis Avenue, Mountain View, CA 94040, US
(74) Broughton, Jon Philip, HLBBshaw, Merlin House, Falconry Court, Baker's Lane, Epping, Essex CM16 5DQ, GB

---

(51) (8) **EP 2307051** *
A 61K 39/395
(30) US 08.07.2008. 79095 P
US 07.11.2008. 112701 P
US 07.11.2008. 112699 P
(86) PCT/US2009003994 08.07.2009.
(96) EP 09794821.0 08.07.2009. En
(87) WO2010005566 14.01.2010. 201002
(97) EP 2307051 13.04.2011. 201115 En
(54) NOTCH-BINDING AGENTS AND ANTAGONISTS AND METHODS OF USE THEREOF
(71) OncoMed Pharmaceuticals, Inc., 800 Chesapeake Drive, Redwood City, CA 94063, US
(72) GURNEY, Austin, L., 946 Diamond Street, San Francisco, CA 94114, US;
HOEY, Timothy, Charles, 200 Darrell Road, Hillsborough, CA 94010, US;
HTUN VAN DER HORST, Edward, Thein, 1788 Oak Creek Drive 314, Palo Alto, CA 94304, US;
SATO, Aaron, Ken, 1636 Albemarle Way, Burlingame, CA 94010, US;
LIU, Yuan, Ching, 1108 Sunrise Drive, Fremont, CA 94539, US;
BRUHNS, Maureen, Fitch, 632 42nd Avenue, San Mateo, CA 94403, US;
LEWICKI, John, A., 308 Escobar Avenue, Los Gatos, CA 95032, US

(74) Evenson, Jane Harriet, et al, Mathys & Squire LLP, 120 Holborn, London EC1N 2SQ, GB

(51) (8) **EP 2313109** *
A 61K 39/395
C 07K 16/24
C 07K 16/28
C 07K 16/46
(30) US 02.07.2008. 77859 P
(86) PCT/US2009049593 02.07.2009.
(96) EP 09774550.9 02.07.2009. En
(87) WO2010003101 07.01.2010. 201001
(97) EP 2313109 27.04.2011. 201117 En
(54) IL6 IMMUNOTHERAPEUTICS
(71) Emergent Product Development Seattle, LLC, 2273 Research Boulevard, Suite 400, Rockville, MD 20850, US
(72) MISHER, Lynda, 10614 - 10th Place N.E., Seattle, WA 98125, US;
LOFQUIST, Alan, Keith, 9422 N.E. 130th Place, Kirkland, WA 98034, US;
BAUM, Peter, Robert, 6027 - 34th Avenue N.E., Seattle, WA 98115, US;
THOMPSON, Peter, Armstrong, 14075 N.E. 30th Place, Bellevue, WA 98007, US
(74) Jappy, John William Graham, Gill Jennings & Every LLP, The Broadgate Tower, 20 Primrose Street, London EC2A 2ES, GB

(51) (8) **EP 2315601** *
A 61K 39/395
A 61P 35/00
A 61K 31/435
(30) US 08.07.2008. 129598 P
EP 08.07.2008. 08305387
(86) PCT/EP2009058709 08.07.2009.
(96) EP 09780344.9 08.07.2009. En
(87) WO2010003992 14.01.2010. 201002
(97) EP 2315601 04.05.2011. 201118 En
(54) COMBINATION OF A C-MET ANTAGONIST AND AN AMINOHETEROARYL COMPOUND FOR THE TREATMENT OF CANCER
(71) Pierre Fabre Medicament, 45, Place Abel Gance, 92100 Boulogne-Billancourt, FR
(72) GOETSCH, Liliane, 15 route de Cluses, F-74130 Ayze, FR
(74) Warcoin, Jacques, Cabinet Régimbeau, 20, rue de Chazelles, 75847 Paris Cedex 17, FR

(51) (8) **EP 2318048** *
A 61K 39/395
C 07K 16/18
(30) US 21.07.2008. 82399 P
(86) PCT/US2009051321 21.07.2009.
(96) EP 09800909.5 21.07.2009. En
(87) WO2010011697 28.01.2010. 201004
(97) EP 2318048 11.05.2011. 201119 En
(54) STRUCTURAL VARIANTS OF ANTIBODIES FOR IMPROVED THERAPEUTIC CHARACTERISTICS
(71) Immunomedics, Inc., 300 American Road, Morris Plains, NJ 07950, US
(72) GOLDENBERG, David, M., c/o Immunomedics Inc., 300 American Road, Morris Plains, NJ 07950, US;
CHANG, Chien-Hsing, c/o Immunomedics Inc., 300 AmericanRoad, Morris Plains, NJ 07950, US;
HANSEN, Hans, J., c/o Immunomedics Inc., 300 American Road, Morris Plains, NJ 07950, US
(74) Bohmann, Armin K., Bohmann, Anwaltssozietät, Nymphenburger Straße 1, 80335 München, DE

(51) (8) **EP 2308509**
A 61K 45/00
A 61K 31/343
A 61K 31/427
A 61K 31/4439
A 61K 31/506
A 61K 31/519
A 61K 31/52
A 61K 31/522
A 61P 25/04
A 61P 43/00
C 07D 417/14
C 07D 473/06
C 07D 473/34
C 07D 487/04
C 07D 487/14
C 07D 495/04
(30) JP 29.05.2008. 2008141178
JP 27.11.2008. 2008302783
(86) PCT/JP2009059845 29.05.2009.
(96) EP 09754797.0 29.05.2009. Ja
(87) WO2009145289 03.12.2009. 200949
(97) EP 2308509 13.04.2011. 201115 En
(54) INHIBITOR OF ANALGESIC TOLERANCE
(71) Kyowa Hakko Kirin Co., Ltd., 1-6-1, Ohtemachi, Chiyoda-ku, Tokyo 100-8185, JP
(72) OUCHI, Jun, c/o Drug Discovery Research Laboratories, Kyowa Hakko, Kirin Co., Ltd., 1188, Shimotogari Nagaizumi-cho, Sunton-gun, Shizuoka 411-8731, JP;
KUNORI, Shunji, c/o Pharmacological Research Laboratories, Kyowa Hakko Kirin Co., Ltd., 1188, Shimotogari, Nagaizumi-cho, Sunto-gun, Shizuoka 411-8731, JP;
KOJIMA, Yozo, c/o Pharmacological Research Laboratories, Kyowa Hakko Kirin Co., Ltd., 1188, Shimotogari, Nagaizumi-cho, Sunto-gun, Shizuoka 411-8731, JP;
SHINODA, Katsumi, c/o Head Office, Kyowa, Hakko Kirin Co., Ltd., 1-6-1, Ohtemachi, Chiyoda-ku, Tokyo 100-8185, JP;
SASAKI, Katsutoshi, c/o Drug Discovery Research Laboratories, Kyowa Hakko Kirin Co., Ltd., 1188, Shimotogari, Nagaizumi-cho, Sunto-gun, Shizuoka 411-8731, JP;
SHIRAKURA, Shiro, c/o Pharmacological Research Laboratories, Kyowa Hakko Kirin Co., Ltd., 1188 Shimotogari, Nagaizumi-cho, Sunto-gun, Shizuoka 411-8731, JP
(74) von Uexküll - Güldenband, Alexa, Vossius & Partner, Siebertstrasse 4, 81675 München, DE

(51) (8) **EP 2322223**
A 61K 45/00
A 61K 31/427
A 61K 31/519
A 61K 31/52
A 61P 25/06
(30) JP 23.07.2008. 2008189610
JP 09.09.2008. 2008230657

(86) PCT/JP2009063151 23.07.2009.
(96) EP 09800422.9 23.07.2009. Ja
(87) WO2010010908 28.01.2010. 201004
(97) EP 2322223 18.05.2011. 201120 En
(54) THERAPEUTIC AGENT FOR MIGRAINE
(71) Kyowa Hakko Kirin Co., Ltd., 1-6-1, Ohtemachi, Chiyoda-ku, Tokyo 100-8185, JP
(72) IKEDA, Junichi, c/o Toxicological Research Laboratories, Kyowa Hakko Kirin Co., Ltd, 1188 Shimotogari, Nagaizumi-cho, Sunto-gun, Shizuoka 411-8731, JP;
ICHIKAWA, Shunji, 825, Hita, Kannami-cho, Tagata-gun, Shizuoka 419-0125, JP;
KUROKAWA, Masako, c/o Head Office, Kyowa Hakko Kirin Co., Ltd, 1-6-1, Ohtemachi, Chiyoda-ku, Tokyo 100-8182, JP;
KANDA, Tomoyuki, c/o Pharmacological Research Laboratories, Kyowa Hakko Kirin Co., Ltd, 1188, Shimotogari, Nagaizumi-cho, Sunto-gun, Shizuoka 411-8731, JP
(74) Vossius & Partner, Siebertstrasse 4, 81675 München, DE

(51) (8) **EP 1980272**
A 61K 47/10
A 61K 9/20
(30) JP 11.04.2007. 2007103925
(96) EP 08007211.9 11.04.2008. En
(97) EP 1980272 15.10.2008. 200842 En
(54) Orally-disintegrating tablet and manufacturing method thereof
(71) NIPRO CORPORATION, 9-3, Honjo-Nishi 3-Chome, Kita-ku, Osaka-shi, Osaka 531-8510, JP
(72) Sakuragi, Shiho, Nipro Corporation, 3023, Noji-cho, Kusatsu-shi, Shiga-ken 525-0055, JP;
Yokoe, Jun-ichi, Nipro Corporation, 3023, Noji-cho, Kusatsu-shi, Shiga-ken 525-0055, JP;
Katayama, Naohisa, Nipro Corporation, 3023, Noji-cho, Kusatsu-shi, Shiga-ken 525-0055, JP;
Kai, Toshiya, Nipro Corporation, 3023, Noji-cho, Kusatsu-shi, Shiga-ken 525-0055, JP
(74) Schüssler, Andrea, Kanzlei Huber & Schüssler, Truderinger Strasse 246, 81825 München, DE

(51) (8) **EP 2313115 ***
A 61K 47/34
A 61K 9/107
(30) US 26.06.2008. 133154 P
US 08.07.2008. 134209 P
(86) PCT/EP2009004655 26.06.2009.
(96) EP 09769029.1 26.06.2009. En
(87) WO2009156180 30.12.2009. 200953
(97) EP 2313115 27.04.2011. 201117 En
(54) POLYMERIC DELIVERY SYSTEMS FOR ACTIVE AGENTS
(71) Technische Universität München, Arcisstrasse 21, 80333 München, DE;
University of Nebraska Medical Center, 986099 Nebraska Medical Center, Omaha, Nebraska 68198-6099, US
(72) KABANOV, Alexander, V., 12735 Westchester Plz, Omaha, NE 68154, US;
JORDAN, Rainer, Wiener Str. 53, 01219 Dresden, DE;
LUXENHOFER, Robert, Reckestr. 4, 01187 Dresden, DE
(74) Vossius & Partner, Siebertstrasse 4, 81675 München, DE

(51) (8) **EP 2079486 ***
A 61K 47/48
A 61K 49/00
A 61K 51/04
A 61P 9/00
A 61P 9/10
A 61P 9/06
A 61P 35/00
A 61P 35/02
(30) US 05.10.2006. 828347 P
US 28.06.2007. 770395
(86) PCT/US2007072669 02.07.2007.
(96) EP 07799253.5 02.07.2007. En
(87) WO2008045604 17.04.2008. 200816
(97) EP 2079486 22.07.2009. 200930 En
(54) EFFICIENT SYNTHESIS OF CHELATORS FOR NUCLEAR IMAGING AND RADIOTHERAPY: COMPOSITIONS AND APPLICATIONS
(71) The Board of Regents of The University of Texas, System, 201 West 7th Street, Austin, TX 78701, US
(72) YANG, David J., 1123 Spinnaker Way, Sugar Land, TX 77478, US;
YU, Dongfang, 15002 Beechurst Drive, Houston, TX 77030, US
(74) Dehmel, Albrecht, Dehmel & Bettenhausen, Patentanwälte, Herzogspitalstrasse 11, 80331 München, DE

(51) (8) **EP 2134371 ***
A 61K 47/48
(30) US 12.03.2007. 906387 P
(86) PCT/US2008003353 12.03.2008.
(96) EP 08742082.4 12.03.2008. En
(87) WO2008112288 18.09.2008. 200838
(97) EP 2134371 23.12.2009. 200952 En
(54) OLIGOMER-OPIOID AGONIST CONJUGATES
(71) Nektar Therapeutics, 455 Mission Bay Boulevard South Suite 100, San Francisco CA 94158, US
(72) RIGGS-SAUTHIER, Jennifer, 7917 Smoke Rise Road, Huntsville, AL 35802, US;
DENG, Bo-liang, 222 Kyser Boulevard, Apt. 56, Madison, AL 35758, US;
RILEY, Timothy, Andrew, 211 Morningwalk Lane, Huntsville, AL 35824, US
(74) Baldock, Sharon Claire, Boult Wade Tennant, Verulam Gardens, 70 Gray's Inn Road, London WC1X 8BT, GB

(51) (8) **EP 2293818 ***
A 61K 47/48
(30) US 16.05.2008. 127928
(86) PCT/US2009003035 15.05.2009.
(96) EP 09746991.0 15.05.2009. En
(87) WO2009139905 19.11.2009. 200947
(97) EP 2293818 16.03.2011. 201111 En
(54) CONJUGATES OF A CHOLINESTERASE MOIETY AND A POLYMER
(71) Nektar Therapeutics, 455 Mission Bay Boulevard South Suite 100, San Francisco CA 94158, US
(72) BOSSARD, Mary, J., 120 Kelvingrove Drive, Madison, AL 35758, US;
ZAPPE, Harold, 505 Orville Smith Road, Harvest, AL 35749, US;
LEE, Seoju, 108 Alisha Circle, Madison, AL 35756, US;

FERNANDO, Lal, A. R., P.O. Box 42, Readington, NJ 08870, US
(74) Baldock, Sharon Claire, Boult Wade Tennant, Verulam Gardens, 70 Gray's Inn Road, GB-London WC1X 8BT, GB

(51) (8) **EP 2303332 ***
A 61K 47/48
A 61P 35/00
(30) US 15.07.2008. 80944 P
(86) PCT/US2009050537 14.07.2009.
(96) EP 09790394.2 14.07.2009. En
(87) WO2010009124 21.01.2010. 201003
(97) EP 2303332 06.04.2011. 201114 En
(54) ANTHRACYCLINE DERIVATIVE CONJUGATES, PROCESS FOR THEIR PREPARATION AND THEIR USE AS ANTITUMOR COMPOUNDS
(71) Genentech, Inc., 1 DNA Way, South San Francisco, CA 94080, US;
NERVIANO MEDICAL SCIENCES S.R.L., Viale Pasteur, 10, 20014 Nerviano (MI), IT
(72) BERIA, Italo, c/o Nerviano Medical Sciences S.r.l., Viale Pasteur 10, 20014 Nerviano, MI, IT;
CARUSO, Michele, c/o Nerviano Medical Sciences S.r.l., Viale Pasteur 10, 20014 Nerviano, MI, IT;
FLYGARE, John, A., c/o Genentech Inc., 1 DNA Way, South San Francisco, CA 94080, US;
LUPI, Vittoria, c/o Nerviano Medical Sciences S.r.l., Viale Pasteur 10, 20014 Nerviano, MI, IT;
PEREGO, Rita, c/o Nerviano Medical Sciences S.r.l., Viale Pasteur 10, 20014 Nerviano, MI, IT;
POLAKIS, Paul, c/o Genentech Inc., 1 DNA Way, South San Francisco, CA 94080, US;
POLSON, Andrew, c/o Genentech Inc., 1 DNA Way, South San Francisco, CA 94080, US;
SALSA, Matteo, c/o Nerviano Medical Sciences S.r.l., Viale Pasteur 10, 20014 Nerviano, MI, IT;
SPENCER, Susan, D., c/o Genentech Inc., 1 DNA Way, South San Francisco, CA 94080, US;
VALSASINA, Barbara, c/o Nerviano MedicalSciences S.r.l., Viale Pasteur 10, 20014 Nerviano, MI, IT
(74) Kiddle, Simon John, et al, Mewburn Ellis LLP, 33 Gutter Lane, London, EC2V 8AS, GB

(51) (8) **EP 2305309**
A 61K 47/48
(30) ES 13.06.2008. 200801796
(86) PCT/ES2009070224 12.06.2009.
(96) EP 09761841.7 12.06.2009. Es
(87) WO2009150284 17.12.2009. 200951
(97) EP 2305309 06.04.2011. 201114 En
(54) CONJUGATES FOR THE ADMINISTRATION OF BIOLOGICALLY ACTIVE COMPOUNDS
(71) Proyecto de Biomedicina Cima, S.L., Avenida. Pío XII, 22 Oficina 1, 31008 Pamplona - Navarra, ES
(72) PRIETO VALTUEAA, Jesús María, Ict (d.p.i.), Avda. Pío XII 53, E-31008 Pamplona - Navarra, ES;
BERRAONDO LÓPEZ, Pedro, Ict (d.p.i.), Avda. Pío XII 53, E-31008 Pamplona - Navarra, ES;
FIORAVANTI, Jessica, Ict (d.p.i.), Avda. Pío XII 53, E-31008 Pamplona - Navarra, ES
(74) ABG Patentes, S.L., Avenida de Burgos 16D, Edificio Euromor, 28036 Madrid, ES

(51) (8) **EP 2310053 ***
A 61K 47/48
A 61K 31/13
A 61K 9/08
A 61K 47/10
A 61K 47/12
(30) EP 26.06.2008. 08011633
US 26.06.2008. 133162 P
(86) PCT/EP2009004599 25.06.2009.
(96) EP 09769009.3 25.06.2009. En
(87) WO2009156160 30.12.2009. 200953
(97) EP 2310053 20.04.2011. 201116 En
(54) PHARMACEUTICAL COMPOSITIONS COMPRISING A COMPLEX OF AMINOCYCLOHEXANE DERIVATIVES AND CYCLODEXTRIN
(71) Merz Pharma GmbH & Co. KGaA, Eckenheimer Landstrasse 100, 60318 Frankfurt Main, DE
(72) PLITT, Kirsten, Q 2 13, 68161 Mannheim, DE;
PURMANN, Brigitte, Nelkenweg 5, 63165 Mühlheim, DE;
SZLAK-FREIER, Alda, Woog Str. 36c, 60431 Frankfurt, DE;
HAUPTMEIER, Bernhard, Neue Weinbergstr. 10, 63571 Gelnhausen, DE
(74) Ricker, Mathias, Wallinger Ricker Schlotter Foerstl, Patent- und Rechtsanwälte, Zweibrückenstrasse 5-7, 80331 München, DE

(51) (8) **EP 2319542**
A 61K 47/48
(30) US 21.02.2006. 775507 P
(96) EP 10193376.0 21.02.2007. En
(97) EP 2319542 11.05.2011. 201119 En
(54) Segmented degradable polymers and conjugates made therefrom
(71) Nektar Therapeutics, 455 Mission Bay Boulevard South Suite 100, San Francisco CA 94158, US
(72) McManus, Samuel, 8867 Tacoma Trail, Huntsville, AL 35802, US;
Kozlowski, Antoni, 2209 Fairfax Drive, Huntsville, AL 35811, US
(74) Baldock, Sharon Claire, Boult Wade Tennant, Verulam Gardens, 70 Gray's Inn Road, London WC1X 8BT, GB

(51) (8) **EP 2320956 ***
A 61K 51/04
(30) US 18.07.2008. 81904 P
(86) PCT/US2009050675 15.07.2009.
(96) EP 09790458.5 15.07.2009. En
(87) WO2010009220 21.01.2010. 201003
(97) EP 2320956 18.05.2011. 201120 En
(54) RADIOLABELLED TRP M8 RECEPTOR LIGANDS
(71) Janssen Pharmaceutica N.V., Turnhoutseweg 30, 2340 Beerse, BE
(72) ACTON, Paul, D., 121 Tamarack Circle, Hatboro, PA 19040, US;
HLASTA, Dennis, J., 5008 Davis Drive, Doylestown, PA 18902, US;
MATTHEWS, Jay, M., 305 Walden Lane, Lansdale, PA 19446, US;
MCNALLY, James, J., 321 Heatherfield Drive, Souderton, PA 18964, US
(74) Warner, James Alexander, Carpmaels & Ransford, One Southampton Row, London, WC1B 5HA, GB

(51) (8) **EP 2300058** *
A 61L 2/00
A 61L 9/00
(30) US 03.07.2008. 167343
US 25.06.2009. 491943
(86) PCT/US2009049001 29.06.2009.
(96) EP 09774208.4 29.06.2009. En
(87) WO2010002757 07.01.2010. 201001
(97) EP 2300058 30.03.2011. 201113 En
(54) CLEANING TOOL
(71) Retractable Technologies, Inc., 511 Lobo Lane, Little Elm, TX 75068, US;
Shaw, Thomas J., 5310 Buena Vista, Frisco, TX 75034, US
(72) SHAW, Thomas, J., 5310 Buena Vista, Frisco, TX 75034, US;
SMALL, Mark, 568 Country Road 5025, Leonard, TX 75452, US;
SHAW, Steven, E., 5310 Buena Vista, Frisco, TX 75034, US;
ZHU, Ni, 4408 Brigade Ct., Plano, TX 75024, US
(74) Grünecker, Kinkeldey, Stockmair & Schwanhäusser, Anwaltssozietät, Leopoldstrasse 4, 80802 München, DE

(51) (8) **EP 2322235**
A 61L 29/16
A 61L 31/16
(30) US 20.11.2006. 860084 P
US 17.01.2007. 880742 P
US 25.01.2007. 897427 P
US 26.02.2007. 903529 P
US 02.03.2007. 904473 P
US 30.04.2007. 926850 P
US 19.10.2007. 981380 P
US 19.10.2007. 981384 P
(96) EP 10189393.1 19.11.2007. En
(97) EP 2322235 18.05.2011. 201120 En
(54) Drug releasing coatings for medical devices
(71) Lutonix, Inc., 7351 Kirkwood Lane, Suite 138, Maple Grove, MN 55369, US
(72) Wang, Lixiao, 1205 Oakview Road, 55356, MN Medina, US
(74) Wiedemann, Peter, Hoffmann - Eitle, Patent- und Rechtsanwälte, Arabellastrasse 4, 81925 München, DE

(51) (8) **EP 2319568**
A 61M 16/00
A 61M 16/16
(30) EP 06.11.2009. 09013976
(96) EP 10010536.0 24.09.2010. De
(97) EP 2319568 11.05.2011. 201119 De
(54) Device for moistening breathed air for artificial respiration
(71) ARTA PLAST AB, Antennvägen 1a, 135 48 Tyresö, SE
(72) Steg, Helge, Sveavägen 81, 113 50 Stockholm, SE;
Hall, Leif, Förlikningsvägen 102, 145 60 Norsborg, SE
(74) Niedmers, Ole, propindus, Patentanwälte, NIEDMERS JAEGER KÖSTER, Van-der-Smissen-Strasse 3, 22767 Hamburg, DE

(51) (8) **EP 2125095** *
A 61M 31/00
(30) EP 03.01.2007. 07000094
(86) PCT/EP2007011460 28.12.2007.
(96) EP 07857152.8 28.12.2007. De
(87) WO2008080622 10.07.2008. 200828
(97) EP 2125095 02.12.2009. 200949 De
(54) APPLICATOR FOR THE USE OF BIRTH GEL FOR HUMAN BIRTH
(71) HCB Happy Child Birth Holding AG, Dufourstrasse 5, 4052 Basel, CH
(72) SCHAUB, Andreas, F., Surenweg 7, 6318 Walchwil, CH
(74) Weiss, Wolfgang, et al, Weickmann & Weickmann, Patentanwälte, Postfach 86 08 20, 81635 München, DE

(51) (8) **EP 2129428** *
A 61N 1/00
(30) US 29.03.2007. 921009 P
(86) PCT/US2008058865 31.03.2008.
(96) EP 08733021.3 31.03.2008. En
(87) WO2008121944 09.10.2008. 200841
(97) EP 2129428 09.12.2009. 200950 En
(54) IMPLANTABLE AUDITORY STIMULATION SYSTEMS HAVING A TRANSDUCER AND A TRANSDUCTION MEDIUM
(71) MED-EL Elektromedizinische Geräte GmbH, Fürstenweg 77a, 6020 Innsbruck, AT
(72) BALL, Geoffrey, R., Himmelrich 25, A-6094 Axams, AT;
LAMPACHER, Peter, Kranewitterstr 36, A-6020 Innsbruck, AT
(74) Glawe, Delfs, Moll, Patent- und Rechtsanwälte, Rothenbaumchaussee 58, 20148 Hamburg, DE

(51) (8) **EP 2263744**
A 61N 1/36
A 61N 1/34
(30) BR 15.06.2009. MU8901002 U
(96) EP 09174137.1 27.10.2009. En
(97) EP 2263744 22.12.2010. 201051 En
(54) Assembly arrangement for a bandage holding a transcutaneous electrical nerve stimulation device
(71) Medecell do Brasil Comércio e Importacao Ltda., Praca Isabel Arruda 157, Sala 41, Centro, 18602-111 Botucatu, Sao Paulo, BR
(72) Bighetti, Moacyr Ramos, Rua Francisco Lyra Brandão, 681, Vila Sônia, 18607-000, Botucatu, São Paulo State, BR
(74) Bettello, Pietro, Via Col d'Echele, 25, 36100 Vicenza, IT

(51) (8) **EP 2300098** *
A 61N 1/36
(30) IT 12.06.2008. RM20080309
(86) PCT/IT2009000255 11.06.2009.
(96) EP 09762195.7 11.06.2009. It
(87) WO2009150688 17.12.2009. 200951
(97) EP 2300098 30.03.2011. 201113 En
(54) METHOD OF EYE TREATMENT FOR PREVENTION OF PRESBYOPIA AND GLAUCOMA, AND MEANS FOR CARRYING OUT SAID TREATMENT
(71) Sooft Italia Spa, Contrada Molino, 17, 63025 Montegiorgio, IT
(72) FILIPPELLO, Massimo, Corso Italia 22, I-95129 Catania, IT
(74) Sarpi, Maurizio, Studio Ferrario S.r.l., Via Collina, 36, 00187 Roma, IT

(51) (8) **EP 2310095** *
A 61P 31/14
A 61K 38/07
A 61K 38/06
A 61K 38/08
C 07K 5/08
C 07K 5/10
C 07K 5/12
(30) US 22.07.2008. 135559 P
(86) PCT/US2009050915 17.07.2009.
(96) EP 09790553.3 17.07.2009. En
(87) WO2010011566 28.01.2010. 201004
(97) EP 2310095 20.04.2011. 201116 En
(54) MACROCYCLIC QUINOXALINE COMPOUNDS AS HCV NS3 PROTEASE INHIBITORS
(71) Merck Sharp & Dohme Corp., 126 East Lincoln Avenue, Rahway, NJ 07065-0907, US;
ISTITUTO DI RICERCHE DI BIOLOGIA MOLECOLARE P., ANGELETTI S.P.A., Via Pontina Km. 30.600, 00040 Pomezia, IT
(72) HARPER, Steven, Via Pontina Km, 30.600, 00040 Pomezia, IT;
SUMMA, Vincenzo, via Pontina Km, 30.600, 00040 Pomezia, IT;
LIVERTON, Nigel J., 126 East Lincoln Avenue, Rahway, NJ 07065-0907, US;
MCCAULEY, Johh A., 126 East Lincoln Avenue, Rahway, NJ 07065-0907, US
(74) Horgan, James Michael Frederic, et al, Merck & Co., Inc., European Patent Department, Hertford Road, Hoddesdon, EN11 9BU, GB

(51) (8) **EP 2313158** *
A 61Q 5/12
A 61K 8/64
A 61K 8/81
A 61K 8/86
(30) US 09.07.2008. 169984
(86) PCT/US2009049708 06.07.2009.
(96) EP 09790084.9 06.07.2009. En
(87) WO2010005906 14.01.2010. 201002
(97) EP 2313158 27.04.2011. 201117 En
(54) METHODS AND KITS IMPARTING BENEFITS TO KERATIN-CONTAINING SUBSTRATES
(71) Johnson & Johnson Consumer Companies, Inc., 199 Grandview Road, Skillman, NJ 08558, US
(72) DALY, Susan, 9 Clark Court, Basking Ridge, NJ 07920, US;
JACHOWICZ, Janusz, 14 Aunt Patty's Lane West, Bethel, NJ 06801, US;
BIANCHINI, Robert, 3 Flagg Way, Hillsborough, NJ 08844, US
(74) Kirsch, Susan Edith, Carpmaels & Ransford, One Southampton Row, London, WC1B 5HA, GB

(51) (8) **EP 2313159** *
A 61Q 5/12
A 61Q 1/00
A 61K 8/64
A 61Q 17/00
(30) US 09.07.2008. 170007
(86) PCT/US2009049716 06.07.2009.
(96) EP 09790087.2 06.07.2009. En
(87) WO2010005909 14.01.2010. 201002
(97) EP 2313159 27.04.2011. 201117 En
(54) COMPOSITION FOR PROVIDING A BENEFIT TO A KERATIN-CONTAINING SUBSTRATE
(71) Johnson & Johnson Consumer Companies, Inc., Grandview Road, Skillman, NJ 08558, US
(72) DALY, Susan, 9 Clark Court, Basking Ridge, NJ 07920, US;
JACHOWICZ, Janusz, 14 Aunt Patty's Lane West, Bethel, NJ 06801, US;
BIANCHINI, Robert, 3 Flagg Way, Hillsborough, NJ 08844, US
(74) Kirsch, Susan Edith, Carpmaels & Ransford, One Southampton Row, London, WC1B 5HA, GB

(51) (8) **EP 2101883** *
A 63B 21/068
A 61H 1/00
(30) NO 08.01.2007. 20070115
(86) PCT/NO2008000003 07.01.2008.
(96) EP 08705141.3 07.01.2008. En
(87) WO2008085058 17.07.2008. 200829
(97) EP 2101883 23.09.2009. 200939 En
(54) VIBRATION APPARATUS FOR USE ON THERAPY AND EXERCISE EQUIPMENT, AND A METHOD FOR PROVIDING CONTROLLABLE VIBRATION TO SUCH EQUIPMENT
(71) Redcord AS, Kilsundsenteret, 4920 Staubø, NO
(72) PLANKE, Tore, Dyngeholmen, N-4916 Borøy, NO
(74) Langfeldt, Jens Fredrik Conradi, et al, Zacco Norway AS, Haakon VII's gt. 2, P.O. Box 2003 Vika, 0125 Oslo, NO

(51) (8) **EP 2300106** *
A 63B 22/08
A 61H 23/00
(30) US 16.06.2008. 61855 P
US 24.12.2008. 140687 P
(86) PCT/NL2009000134 16.06.2009.
(96) EP 09788133.8 16.06.2009. En
(87) WO2010005286 14.01.2010. 201002
(97) EP 2300106 30.03.2011. 201113 En
(54) TRAINING SYSTEM COMPRISING A CYCLING DEVICE
(71) Power Plate International Ltd., Unit 9a Utopia Village, 7 Chalcot Road, London, NW1 8LH, GB
(72) VAN DER MEER, Augustinus leonardus Nicolaas, 26 Louisahoeve, NL-2131 MR Hoofddorp, NL
(74) Kox, Jordi, Exter Polak & Charlouis B.V. (EP&C), P.O. Box 3241, 2280 GE Rijswijk, NL

(51) (8) **EP 2310098** *
A 63B 59/14
(30) US 06.08.2008. 221913
(86) PCT/US2009053053 06.08.2009.
(96) EP 09805584.1 06.08.2009. En
(87) WO2010017421 11.02.2010. 201006
(97) EP 2310098 20.04.2011. 201116 En
(54) HOCKEY STICK
(71) Easton Sports, Inc., 7855 Haskell Avenue, Suite 200, Van Nuys, CA 91406-1999, US
(72) IE, Citra, A., 9498 Oviedo Street, San Diego, CA 92129, US

(74) Viering, Jentschura & Partner, Grillparzerstrasse 14, 81675 München, DE

(51) (8) **EP 2321022 ***
B 01D 9/00
C 30B 7/00
A 61K 9/16
B 01D 1/18
F 26B 5/06
F 26B 3/12
(30) GB 18.07.2008. 0813114
GB 09.04.2009. 0906144
GB 03.06.2009. 0909486
(86) PCT/GB2009050885 20.07.2009.
(96) EP 09785360.0 20.07.2009. En
(87) WO2010007447 21.01.2010. 201003
(97) EP 2321022 18.05.2011. 201120 En
(54) PROCESS FOR IMPROVING CRYSTALLINITY
(71) Prosonix Limited, Magdalen Centre Robinson Avenue, Oxford Science Park, Oxford, Oxfordshire OX4 4GA, GB
(72) RUECROFT, Graham, The Magdelen Centre, Robert Robinson Avenue, Oxford Science Park, Oxford, Oxfordshire OX4 4GA, GB;
PARIKH, Dipesh, The Magdelen Centre, Robert Robinson Avenue, Oxford Science Park, Oxford, Oxfordshire OX4 4GA, GB;
HIPKISS, David, The Magdelen Centre, Robert Robinson Avenue, Oxford Science Park, Oxford, Oxfordshire OX4 4GA, GB
(74) Clarke, Lionel Paul, Gill Jennings & Every LLP, The Broadgate Tower, 20 Primrose Street, London EC2A 2ES, GB

(51) (8) **EP 2321023 ***
B 01D 9/00
C 30B 7/00
A 61K 9/16
B 01D 1/18
F 26B 5/06
F 26B 3/12
(30) GB 18.07.2008. 0813114
GB 09.04.2009. 0906144
GB 03.06.2009. 0909486
(86) PCT/GB2009050884 20.07.2009.
(96) EP 09785359.2 20.07.2009. En
(87) WO2010007446 21.01.2010. 201003
(97) EP 2321023 18.05.2011. 201120 En
(54) PROCESS FOR IMPROVING CRYSTALLINITY OF FLUTICASONE PARTICLES
(71) Prosonix Limited, Magdalen Centre Robinson Avenue, Oxford Science Park, Oxford, Oxfordshire OX4 4GA, GB
(72) RUECROFT, Graham, The Magdelen Centre Robert Robinson Avenue, Oxford Science Park, Oxford, Oxfordshire OX4 4GA, GB;
PARIKH, Dipesh, The Magdelen Centre Robert Robinson Avenue, Oxford Science Park, Oxford, Oxfordshire OX4 4GA, GB;
HIPKISS, David, The Magdelen Centre Robert Robinson Avenue, Oxford Science Park, Oxford, Oxfordshire OX4 4GA, GB
(74) Clarke, Lionel Paul, Gill Jennings & Every LLP, The Broadgate Tower, 20 Primrose Street, London EC2A 2ES, GB

(51) (8) **EP 2236185**
B 01D 35/18
(96) EP 09157279.2 03.04.2009. En
(97) EP 2236185 06.10.2010. 201040 En
(54) Filter Assembly
(71) Delphi Technologies Holding S.à.r.l., Avenue de Luxembourg, 4940 Bascharage, LU
(72) Hardouin, Ghislain, 60, rue du Grain D'Or, 41120 SAMBIN, FR;
Daniel, Patrick, 40 bis rue Albert 1er, 41000 Blois, FR
(74) Gregory, John David Charles, Delphi Diesel Systems, Patent Department, Courteney Road, Gillingham, Kent ME8 0RU, GB

(51) (8) **EP 2295130**
B 01D 53/78
B 01D 53/50
(86) PCT/CN2008071307 13.06.2008.
(96) EP 08757718.5 13.06.2008. Zh
(87) WO2009149603 17.12.2009. 200951
(97) EP 2295130 16.03.2011. 201111 En
(54) A METHOD AND DEVICE FOR DESULFURIZATION OF THE SMOKE DISCHARGED FROM SHIP
(71) Peng, Sigan, No.12 A 11, Zhaofu International Mansion, No. 717 Wuluo Road, Wuchang District, Wuhan, Hubei 430072, CN
(72) Peng, Sigan, No.12, 11, Zhaofu International Mansion, No. 717 Wuluo Road, Wuchang District, Wuhan, Hubei 430072, CN
(74) Fuchs, Patentanwälte, Söhnleinstraße 8, 65201 Wiesbaden, DE

(51) (8) **EP 2313182 ***
B 01D 57/02
(30) US 29.07.2008. 84541 P
US 22.07.2008. 129819 P
(86) PCT/US2009051420 22.07.2009.
(96) EP 09800950.9 22.07.2009. En
(87) WO2010011760 28.01.2010. 201004
(97) EP 2313182 27.04.2011. 201117 En
(54) AMPLIFIED ELECTROKINETIC FLUID PUMPING SWITCHING AND DESALTING
(71) Massachusetts Institute of Technology, 77 Massachusetts Avenue, Cambridge, MA 02139, US
(72) KIM, Sung, Jae, 1 Oak Grove Ave. 307, Melrose, MA 02176, US;
HAN, Jongyoon, 5 Appletree Lane, Bedford, MA 01730, US
(74) Szelagowski, Helen, Valea AB, Lindholmspiren 5, S-417 56 Göteborg, SE

(51) (8) **EP 2218497**
B 01J 2/20
B 30B 11/20
(30) FR 17.02.2009. 0900707
(96) EP 10356010.8 17.02.2010. Fr
(97) EP 2218497 18.08.2010. 201033 Fr
(54) Apparatus for the production of pellets for a continuous screw press triturating oleous seeds
(71) La mécanique moderne, Allée d'Irlande, 62223 Fleuchy, FR
(72) Bielawski, Eric, 10 bis Rue d'en Haut, 62760 Halloy, FR

(74) Schmitt, John, Roosevelt Consultants, 109, rue Sully, BP 6138, 69466 Lyon Cédex 06, FR

(51) (8) **EP 2307129 ***
B 01J 13/14
A 01N 25/28
A 61K 8/11
A 61K 9/50
(30) US 31.07.2008. 85255 P
(86) PCT/IL2009000751 02.08.2009.
(96) EP 09787499.4 02.08.2009. En
(87) WO2010013250 04.02.2010. 201005
(97) EP 2307129 13.04.2011. 201115 En
(54) MICROCAPSULES COMPRISING ACTIVE INGREDIENTS AND A METAL OXIDE SHELL, A METHOD FOR THEIR PREPARATION AND USES THEREOF
(71) Sol-Gel Technologies Ltd., Gloda Meir Street 7, Weizmann Science Park, Ness Ziona 74036, IL
(72) TOLEDANO, Ofer, 15A Emek Zvuloon Street, 44623 Kfar-Saba, IL;
SERTCHOOK, Hanan, 23 Katznelson Street, 70700 Gedera, IL;
LOBODA, Natalia, 16/18 Shlomo Ben-Yossef Street, 93811 Jerusalem, IL;
ABU-REZIQ, Raed, P.O.Box 70, 30091 Jatt Hamesholash, IL
(74) Lane, Cathal Michael, 5 Dartmouth Road, Dublin 6, IE

(51) (8) **EP 2321042 ***
B 01J 19/18
C 13K 13/00
(30) US 23.07.2008. 135722 P
(86) PCT/US2009051517 23.07.2009.
(96) EP 09801001.0 23.07.2009. En
(87) WO2010011828 28.01.2010. 201004
(97) EP 2321042 18.05.2011. 201120 En
(54) AUTOMATED OLIGOSACCHARIDE SYNTHESIZER
(71) Ancora Pharmaceuticals Inc., 200 Boston Avenue, Suite 4975, Medford, MA 02155, US
(72) CHRIST, William, 10 Sutherland Street, Andover, MA 01810, US;
KRÖCK, Lenz, Wunderlistrasse 30, 8037 Zürich, CH;
PLANTE, Obadiah, J., 12 Roosevelt Avenue, Danvers, MA 01923, US;
CASTAGNER, Bastien, Schumacherweg 46, CH-8046 Zurich, CH;
SEEBERGER, Peter, H., Rudolf-Breitscheid-Strasse 46, 14532 Kleinmachnow, DE
(74) Maiwald, Walter, Maiwald Patentanwalts GmbH, Elisenhof, Elisenstrasse 3, 80335 München, DE

(51) (8) **EP 1974806**
B 01J 20/04
C 02F 1/28
C 02F 1/56
C 02F 103/28
C 02F 103/32
(96) EP 07005854.0 21.03.2007. En
(97) EP 1974806 01.10.2008. 200840 En
(54) Process for the purification of water
(71) OMYA DEVELOPMENT AG, Baslerstrasse 42, 4665 Oftringen, CH
(72) Gane, Patrick A. C., Studenweg 8, CH-4852 Rothrist, CH;
Schölkopf, Joachim, Buechbühlstrasse 3, CH-8956 Killwangen, CH;
Gantenbein, Daniel, Hauptstrasse 39, CH-4145 Gempen, CH
(74) Maiwald Patentanwalts GmbH, Elisenhof, Elisenstrasse 3, 80335 München, DE

(51) (8) **EP 1982759**
B 01J 20/04
C 02F 1/28
C 02F 1/56
C 02F 103/28
C 02F 103/32
(96) EP 07005856.5 21.03.2007. En
(97) EP 1982759 22.10.2008. 200843 En
(54) Surface treated calcium carbonate and its use in waste water treatment
(71) OMYA DEVELOPMENT AG, Baslerstrasse 42, 4665 Oftringen, CH
(72) Gane, Patrick A. C., Studenweg 8, CH-4852 Rothrist, CH;
Schölkopf, Joachim, Buechbühlstrasse 3, CH-8956 Killwangen, CH;
Gantenbein, Daniel, Hauptstrasse 39, CH-4145 Gempen, CH;
Gerard, Daniel E., Riehenstrasse 90, CH-4058 Basel, CH
(74) Maiwald Patentanwalts GmbH, Elisenhof, Elisenstrasse 3, 80335 München, DE

(51) (8) **EP 2318130 ***
B 01J 21/06
B 01J 21/18
B 01J 37/08
H 01M 4/00
(30) DE 17.07.2008. 102008033574
(86) PCT/EP2009005182 16.07.2009.
(96) EP 09777243.8 16.07.2009. De
(87) WO2010006796 21.01.2010. 201003
(97) EP 2318130 11.05.2011. 201119 De
(54) PROCESS FOR PRODUCING CARBON SUBSTRATES LOADED WITH METAL OXIDES AND CARBON SUBSTRATES PRODUCED IN THIS WAY
(71) Blücher Systems GmbH, Van-der-Upwich-Strasse 37, 41334 Nettetal, DE
(72) SCHULZ, Christof, Ehrenstrasse 30, 50672 Köln, DE;
WIGGERS, Hartmut, Riesweg 33, 48734 Reken, DE

(51) (8) **EP 2233207**
B 01J 21/18
B 01J 23/755
B 01J 23/881
B 01J 37/02
B 01J 37/08
C 01B 31/00
(96) EP 09153963.5 27.02.2009. En
(97) EP 2233207 29.09.2010. 201039 En
(54) Process for the preparation of metal-carbon containing bodies
(71) BASF SE, 67056 Ludwigshafen, DE
(72) Hoekstra, Jacobus, Salamancapad 175, 3584 DX Utrecht, NL;
Geus, John Wilhelm, Gezichstlaan 100, 3723 GJ Bilthoven, NL;
Jenneskens, Leonardus Wijnand, Koninginnelaan 33, 3762 DA Soest, NL;

van de Kleut, Dirk, Ringslang 28, 3824 VE Amersfoort, NL; Vlietstra, Edward Jan, Eiteren 93, 3401 PS IJsselstein, NL
(74) Hatzmann, Martin, et al, Vereenigde, Johan de Wittlaan 7, 2517 JR Den Haag, NL

(51) (8) **EP 2163304**
B 01J 27/18
B 01J 35/00
(30) KR 24.06.2008. 20080059536
(96) EP 08011539.7 25.06.2008. En
(97) EP 2163304 17.03.2010. 201011 En
(54) Coating composition comprising photocatalyst coated with apatite and radiant heating system having the same
(71) Energy Korea Inc., Yongjeong-ri 1048-1, Ganghwa-eup, Ganghwa-gun, Incheon, KR
(72) Lee, Kwang Seong, 114-1701 Songo-Haemoro Apt., 3-44 Songdo-dong, Yeonsu-gu, Incheon, KR;
Hur, Dong Ryol, 202-1706 Yongjong-Joongang Apt., Yongjong-dong, Gyeyang-gu, Incheon, KR;
Lee, Jang Mok, 707-1305 Jugong Apt., Gaepo3-dong, Gangnam-gu, Seoul, KR
(74) Merkle, Gebhard, TER MEER STEINMEISTER & PARTNER GbR, Patentanwälte, Mauerkircherstrasse 45, 81679 München, DE

(51) (8) **EP 2303466 ***
B 05B 7/24
F 16K 5/00
(30) GB 17.06.2008. 0811050
(86) PCT/GB2009050691 17.06.2009.
(96) EP 09785242.0 17.06.2009. En
(87) WO2010004305 14.01.2010. 201002
(97) EP 2303466 06.04.2011. 201114 En
(54) A CONNECTOR FOR A GRAVITY FEED SPRAY GUN, A GRAVITY FEED SPRAY GUN AND A METHOD OF PREPARING A SPRAY PAINT
(71) U-POL LTD, 1 Totteridge Lane, Whetstone, London N20 0EY, GB
(72) JULIEN, Charles, U-POL Limited, 1/3 Totteridge Lane, Whetstone, London, Great London N20 0EY, GB
(74) Gaunt, Thomas Derrick, Ablett & Stebbing, 101/103 Baker Street, London, W1U 6FQ, GB

(51) (8) **EP 2315634 ***
B 06B 1/08
A 61B 17/32
H 01L 41/20
A 61B 17/22
(30) US 15.07.2008. 80772 P
(86) PCT/US2009050525 14.07.2009.
(96) EP 09790391.8 14.07.2009. En
(87) WO2010009113 21.01.2010. 201003
(97) EP 2315634 04.05.2011. 201118 En
(54) A MAGNETOSTRICTIVE ACTUATOR OF A MEDICAL ULTRASOUND TRANSDUCER ASSEMBLY, AND A MEDICAL ULTRASOUND HANDPIECE AND A MEDICAL ULTRASOUND SYSTEM HAVING SUCH ACTUATOR
(71) Ethicon Endo-Surgery, Inc., 4545 Creek Road, Cincinnati, OH 45242, US
(72) DIETZ, Timothy, G., 2 Elm Ledge, Terrace Park, OH 45174, US;
JAEGER, Hans, Eschenstrasse 11, CH-4922 Thunstetten, CH
(74) Tunstall, Christopher Stephen, Carpmaels & Ransford, One Southampton Row, London, WC1B 5HA, GB

(51) (8) **EP 2310149 ***
B 08B 9/055
(30) US 03.07.2008. 167664
(86) PCT/US2009049228 30.06.2009.
(96) EP 09774322.3 30.06.2009. En
(87) WO2010002871 07.01.2010. 201001
(97) EP 2310149 20.04.2011. 201116 En
(54) SPEED REGULATED PIPELINE PIG
(71) TDW DELAWARE, INC., 1100 Market Street, Suite 780, Wilmington, Delaware 19801, US
(72) PRUETT, Rick, D., 219 N. Pine, Oologah, OK 74053, US;
STRONG, Robert, F., 12165 N. 108th East Avenue, Collinsville, OK 74021, US;
FREEMAN, Eric, N., 15772 South 81st West Avenue, Kiefer, OK 74041, US;
COOPER, Charles Culver, Gidden, 6104 Holland Street, Arvada, CO 80004, US;
NELSON, Scott, Douglas, 2640 Zenobia Street, Denver, CO 80212, US;
HENAULT, Mark, Russell, 12996 Harmony Parkway, Westminster, CO 80234, US
(74) Bucks, Teresa Anne, Boult Wade Tennant, Verulam Gardens, 70 Gray's Inn Road, London WC1X 8BT, GB

(51) (8) **EP 2111931**
B 09B 3/00
B 01D 1/00
B 01D 5/00
B 01D 29/11
B 01D 53/40
B 01D 53/77
B 01D 53/86
C 02F 1/04
C 02F 3/02
(30) JP 28.12.2006. 2006355860
(86) PCT/JP2007001494 28.12.2007.
(96) EP 07859679.8 28.12.2007. Ja
(87) WO2008081598 10.07.2008. 200828
(97) EP 2111931 28.10.2009. 200944 En
(54) METHOD FOR DISPOSAL OF ORGANIC WASTE MATERIAL AND APPARATUS FOR THE METHOD
(71) N.M.G Environmental Development Co., Ltd., 5-31-1-206 Oyata, Adachi-ku, Tokyo 120-0001, JP
(72) TOKUDA, Yoshiyuki, 1-14-13 Nangai, Higashi, Yamato-shi, Tokyo 207-0014, JP;
OKAUCHI, Toshiaki, 3-2-7-103 Oyata, Adachi-ku, Tokyo 120-0001, JP
(74) Maggs, Michael Norman, et al, Kilburn & Strode LLP, 20 Red Lion Street, London WC1R 4PJ, GB

(51) (8) **EP 1963034 ***
B 21B 1/46
(86) PCT/IT2005000754 22.12.2005.
(96) EP 05850981.1 22.12.2005. En
(87) WO2007072515 28.06.2007. 200726
(97) EP 1963034 03.09.2008. 200836 En
(54) PROCESS AND RELATED PLANT FOR PRODUCING STEEL STRIPS WITH SOLUTION OF CONTINUITY

(71) ARVEDI, Giovanni, Via Mercatello, 26, I-26100 Cremona, IT
(72) ARVEDI, Giovanni, Via Mercatello, 26, I-26100 Cremona, IT
(74) Adorno, Silvano, et al, Società Italiana Brevetti S.p.A., Via Carducci 8, 20123 Milano, IT

(51) (8) **EP 2303490 ***
B 22D 7/02
(30) US 31.07.2008. 137470 P
(86) PCT/CA2009001077 30.07.2009.
(96) EP 09802325.2 30.07.2009. En
(87) WO2010012099 04.02.2010. 201005
(97) EP 2303490 06.04.2011. 201114 En
(54) SEQUENTIAL CASTING OF METALS HAVING SIMILAR FREEZING RANGES
(71) Novelis, Inc., 191 Evans Avenue, Toronto, ON M8Z 1J5, CA
(72) WAGSTAFF, Robert Bruce, P.O. Box 891, Greenacres, Washington 99016-0891, US;
REEVES, Eric W., 4683 E. Hudlow Road, Hayden Lake, Idaho 83835, US;
FENTON, Wayne J., 16704 E. Heroy Ave., Spokane Valley, Washington 99216, US;
BOORMAN, Jim, 2207 N. Flora, Greenacres, Washington 99016, US
(74) HOFFMANN EITLE, Patent- und Rechtsanwälte, Arabellastraße 4, 81925 München, DE

(51) (8) **EP 2293892 ***
B 22D 7/12
B 22D 30/00
B 22D 9/00
(30) US 06.06.2008. 131283
(86) PCT/CA2009000726 28.05.2009.
(96) EP 09756989.1 28.05.2009. En
(87) WO2009146527 10.12.2009. 200950
(97) EP 2293892 16.03.2011. 201111 En
(54) METHOD AND APPARATUS FOR REMOVAL OF COOLING WATER FROM INGOTS BY MEANS OF WATER JETS
(71) Novelis, Inc., 191 Evans Avenue, Toronto, ON M8Z 1J5, CA
(72) REEVES, Eric W., 4683 E. Hudlow Road, Hayden Lake, Idaho 83835, US;
WOMACK, Randy, P.O. Box 96, Spokane Valley, Washington 99037, US;
FENTON, Wayne J., 16704 E. Heroy Ave., Spokane Valley, Washington 99216, US;
MCDERMOTT, Jeff, Apt. D205, 21200 E. Country Vista Drive, Liberty Lake, Washington 99019, US;
BOORMAN, Jim, 2207 N. Flora, Greenacres, Washington 99016, US
(74) HOFFMANN EITLE, Patent- und Rechtsanwälte, Arabellastraße 4, 81925 München, DE

(51) (8) **EP 2315639 ***
B 22F 1/00
B 22F 9/24
B 82B 1/00
(30) US 16.05.2008. 71785 P
(86) PCT/US2009044402 18.05.2009.
(96) EP 09747775.6 18.05.2009. En
(87) WO2009140694 19.11.2009. 200947
(97) EP 2315639 04.05.2011. 201118 En
(54) GREEN SYNTHESIS OF NANOMETALS USING PLANT EXTRACTS AND USE THEREOF
(71) Verutek Technologies, Inc., 65 West Dudley Town Road, Bloomfield, CT 06002, US
(72) HOAG, George E., 65 West Dudley Town Road, Bloomfield, Connecticut 06002, US;
COLLINS, John B., 65 West Dudley Town Road, Bloomfield, Connecticut 06002, US;
VARMA, Rajender S., 26 West M.L.K. Drive, MS443, Cincinnati, Ohio 45268, US;
NADAGOUDA, Mallikarjuna, 26 West M.L.K. Drive, MS443, Cincinnati, Ohio 45268, US
(74) von Kreisler Selting Werner, Deichmannhaus am Dom, Bahnhofsvorplatz 1, 50667 Köln, DE

(51) (8) **EP 2218533**
B 23D 59/00
B 27B 17/00
(30) DE 14.02.2009. 102009008983
(96) EP 10000786.3 27.01.2010. De
(97) EP 2218533 18.08.2010. 201033 De
(54) Component for reversible attachment to a handheld cutting device
(71) Niedersächsische Landesforsten, Anstalt öffentlichen Rechts, Husarenstrasse 75, 38102 Braunschweig, DE
(72) Kapell, Holger, Böhmsholzer Weg 4, 21394 Südergellersen, DE
(74) Knoop, Philipp, et al, Vonnemann Kloiber & Kollegen, An der Alster 84, 20099 Hamburg, DE

(51) (8) **EP 2300194 ***
B 23K 26/38
A 61B 17/06
(30) US 16.06.2008. 139744
(86) PCT/US2009046570 08.06.2009.
(96) EP 09767463.4 08.06.2009. En
(87) WO2009155153 23.12.2009. 200952
(97) EP 2300194 30.03.2011. 201113 En
(54) POST LASER DRILLING STRESS RELIEF OF SURGICAL NEEDLES MADE OF REFRACTORY ALLOYS
(71) Ethicon, Inc, U.S. Route 22, Somerville, NJ 08876, US
(72) MAURER, Robert, E., 3 McElroy Lane, Belle Mead, NJ 08502, US
(74) Carpmaels & Ransford, One Southampton Row, London WC1B 5HA, GB

(51) (8) **EP 2310165 ***
B 23P 17/06
B 23D 31/00
E 04C 5/01
(30) DE 23.07.2008. 102008034250
(86) PCT/DE2009000736 23.05.2009.
(96) EP 09775880.9 23.05.2009. De
(87) WO2010009687 28.01.2010. 201004
(97) EP 2310165 20.04.2011. 201116 De
(54) METHOD FOR PRODUCING STEEL FIBERS
(71) CENT & CENT GMBH & CO. KG, Benzstrasse 14, 89155 Erbach, DE
(72) STAHL, Karl-Hermann, Pfälzer Strasse 14, 89269 Vöhringen, DE

(74) Dziewior, Joachim, Ensingerstrasse 21, 89073 Ulm, DE

(51) (8) **EP 2014419**
B 25B 27/10
(30) DE 10.07.2007. 202007009629 U
(96) EP 08012091.8 04.07.2008. De
(97) EP 2014419 14.01.2009. 200903 De
(54) Hydraulic pressing device, in particular for binding workpieces
(71) Joiner's Bench AG, Adlerstrasse 17b, 42859 Remscheid, DE
(72) Sgarra, Luciano, Fichtenstrasse 53, 42855 Remscheid, DE;
Koschade, Sven, Floraweg 38, 42929 Wermelskirchen, DE
(74) Schwöbel, Karl T., et al, Patentanwälte Kutzenberger & Wolff, Theodor-Heuss-Ring 23, 50668 Köln, DE

(51) (8) **EP 2296858 ***
B 29B 17/02
D 21B 1/02
(30) EP 21.05.2008. 08425361
(86) PCT/IB2009052131 21.05.2009.
(96) EP 09750253.8 21.05.2009. It
(87) WO2009141796 26.11.2009. 200948
(97) EP 2296858 23.03.2011. 201112 En
(54) METHOD FOR RECYCLING COMPOSITE MATERIAL
(71) Eco Quadrinvest S.r.l., Zona Industriale, Comparto B - Lotto N. 34, Loc. Aeroporto, 89900 Vibo Valentia, IT
(72) LECCE, Roberto, Via Boccaccio 35, I-10132 Torino, IT;
CERUTTI, Silvano, Via Costantino Nigra 26, I-10147 Salassa (Torino), IT
(74) Bonini, Ercole, Studio Bonini Srl, Corso Fogazzaro, 8, I-36100 Vicenza, IT

(51) (8) **EP 2293912 ***
B 29C 37/02
B 29C 71/00
A 61F 9/00
A 61F 9/007
B 24B 9/20
B 24B 31/00
(30) US 30.05.2008. 57246
US 24.06.2008. 132927
(86) PCT/US2008010501 05.09.2008.
(96) EP 08815737.5 05.09.2008. En
(87) WO2009145755 03.12.2009. 200949
(97) EP 2293912 16.03.2011. 201111 En
(54) SURFACE TREATED IMPLANTABLE ARTICLES AND RELATED METHODS
(71) QLT Plug Delivery, Inc., 1098 Hamilton Court, Menlo Park, CA 94025, US
(72) RAPACKI, Alan, R., 2725 Hastings Avenue, Redwood City, California 94061, US;
LEUNG, Wilhelm, 7575 Aubrey Street, Burnaby, British Columbia V5A 1K6, CA
(74) Stellbrink, Axel, Vossius & Partner, Siebertstrasse 4, 81675 München, DE

(51) (8) **EP 2310175 ***
B 29C 39/10
H 01L 33/00
(30) NL 15.06.2008. 2001689
(86) PCT/NL2009050344 15.06.2009.
(96) EP 09794684.2 15.06.2009. Nl
(87) WO2010005294 14.01.2010. 201002
(97) EP 2310175 20.04.2011. 201116 En
(54) A METHOD FOR MANUFACTURING A LENS TO BE ADDED TO A LED, AND A LENS OBTAINED WITH THAT METHOD
(71) Renevu Ltd., 1st. Floor Dekk House, Zippora Street, Providence Industrial Estate, Mahe, SC
(72) VAN OG, Marinus Johannes, Pandora 53, NL-3402 HW Ijsselstein, NL
(74) Bartelds, Erik, Arnold & Siedsma, Sweelinckplein 1, 2517 GK Den Haag, NL

(51) (8) **EP 2293914 ***
B 29C 45/00
A 61L 31/06
(86) PCT/FR2008051199 30.06.2008.
(96) EP 08806125.4 30.06.2008. Fr
(87) WO2010000954 07.01.2010. 201001
(97) EP 2293914 16.03.2011. 201111 Fr
(54) METHOD FOR MOULDING POLY(1,4-DIOXANONE)
(71) Bioring SA en liquidation, Chemin d'Etraz 2, 1027 Lonay, CH
(72) LE GOFF, Philippe, Ch. de la Biolleyre 5, CH-1066 Epalinges, CH;
ANDRIEU, Raymond, Chemin de Chanta-Merloz 7, CH-1169 Yens, CH
(74) Micheli & Cie SA, Rue de Genve 122, Case Postale 61, 1226 Genve-Thônex, CH

(51) (8) **EP 2318194 ***
B 29C 49/00
B 29C 49/22
B 29C 45/16
B 65D 1/02
(30) BE 12.02.2008. 200800082
(86) PCT/BE2009000008 12.02.2009.
(96) EP 09710251.1 12.02.2009. En
(87) WO2009100506 20.08.2009. 200934
(97) EP 2318194 11.05.2011. 201119 En
(54) PLASTIC PREFORM AND PROCESS FOR THE MANUFACTURING THEREOF TO A CONTAINER AND THE CONTAINER AND THE USE THEREOF
(71) Resilux, Damstraat 4, 9230 Wetteren, BE
(72) DIERICKX, William, Leenstraat 41, B-9070 Destelbergen, BE
(74) Petsis, Christos, Attorney at Law, Kyparissias 4-6, 54249 Thessaloniki, GR

(51) (8) **EP 2300213 ***
B 29C 51/16
B 29C 51/10
B 65D 5/56
B 29C 51/42
(30) GB 13.05.2008. 0808604
(86) PCT/GB2009050506 13.05.2009.
(96) EP 09746103.2 13.05.2009. En
(87) WO2009138786 19.11.2009. 200947
(97) EP 2300213 30.03.2011. 201113 En
(54) A METHOD FOR PRODUCING FOOD PACKAGING AND SUCH A FOOD PACKAGING

(71) Split-It Limited, Interlink Park, Bardon, Leicestershire LE67 1PE, GB;
Mecaplastic SAS, Z.I. de Montifaut, 85700 Pouzauges, FR
(72) TYE, Paul, The Benson Box Company Limited, Interlink Way South, Bardon Hill, Coalville, Leicestershire LE67 1PE, GB;
STEPNEY, Mark, Mecaplastic (UK) Limited, Unit 5 Kingfisher Way, Hemdale Business Park, Nuneaton, Warwickshire CV11 6GY, GB
(74) Newell, William Joseph, et al, Wynne-Jones, Lainé & James LLP, Essex Place, 22 Rodney Road, Cheltenham, Gloucestershire GL50 1JJ, GB

(51) (8) **EP 2313252 ***
B 29C 63/00
(30) DE 21.07.2008. 102008034115
(86) PCT/EP2009004859 06.07.2009.
(96) EP 09776970.7 06.07.2009. De
(87) WO2010009805 28.01.2010. 201004
(97) EP 2313252 27.04.2011. 201117 De
(54) METHOD FOR APPLYING EDGE STRIPS ONTO NARROW SURFACES OF IN PARTICULAR PLATE-SHAPED WORK PIECES AND WORK PIECES OBTAINED IN SAID MANNER
(71) Karl W. Niemann GmbH & Co. KG, Hedemer Strasse 4, 32361 Pr. Oldendorf, DE
(72) SCHUMACHER, Reinhard, Otto-Hahn-Str. 3, 32361 Preussisch Oldendorf, DE
(74) Gesthuysen, von Rohr & Eggert, Patentanwälte, Huyssenallee 100, 45128 Essen, DE

(51) (8) **EP 2221164**
B 29C 65/02
B 29C 65/10
E 04D 1/36
E 04D 13/17
B 29C 65/00
B 29C 65/74
(30) DE 20.02.2009. 102009001040
(96) EP 10151022.0 19.01.2010. De
(97) EP 2221164 25.08.2010. 201034 De
(54) Ridge and arris role with welded seam
(71) Casaproof GmbH, Benzstraße 3, 51381 Leverkusen, DE
(72) Bischoff, Achim, VON-Berlepsch-Straße 5, 42799 Leichlingen, DE
(74) Gille Hrabal Struck Neidlein Prop Roos, Patentanwälte, Brucknerstrasse 20, 40593 Düsseldorf, DE

(51) (8) **EP 2221167**
B 29C 70/44
(30) US 23.02.2009. 390806
(96) EP 10153011.1 09.02.2010. En
(97) EP 2221167 25.08.2010. 201034 En
(54) Apparatus And Method Of Making Composite Material Articles
(71) General Electric Company, a New York Company, 1 River Road, Schenectady, NY 12345, US
(72) Driver, Howard Daniel, 414 Grafton Court, Greer, SC 29650, US
(74) Bedford, Grant Richard, Global Patent Operation - Europe, GE International Inc., 15 John Adam Street, London WC2N 6LU, GB

(51) (8) **EP 2315657 ***
B 30B 9/30
B 65B 27/06
B 30B 13/00
B 65G 1/16
B 65G 69/00
B 29D 30/06
(30) FR 22.07.2008. 0804156
(86) PCT/FR2009051473 22.07.2009.
(96) EP 09740361.2 22.07.2009. Fr
(87) WO2010010300 28.01.2010. 201004
(97) EP 2315657 04.05.2011. 201118 Fr
(54) MACHINE AND METHOD FOR COMPACTING AN ANNULAR PART MADE OF A FLEXIBLE MATERIAL
(71) Marrel, Didier André Louis, Route de Saint Laurent de Vaux, 69670 Vaugneray, FR;
CRM, Route de Saint Laurent de Vaux, 69670 Vaugneray, FR
(72) Marrel, Didier André Louis, Route de Saint Laurent de Vaux, 69670 Vaugneray, FR;
CRM, Route de Saint Laurent de Vaux, 69670 Vaugneray, FR
(74) Weber, Jean-François, et al, Cabinet Didier Martin, 50 Chemin des Verrires, 69260 Charbonnieres Les Bains, FR

(51) (8) **EP 2121297 ***
B 30B 11/34
(30) GB 15.02.2007. 0702974
(86) PCT/IB2008000648 15.02.2008.
(96) EP 08719335.5 15.02.2008. En
(87) WO2008099283 21.08.2008. 200834
(97) EP 2121297 25.11.2009. 200948 En
(54) METHOD AND APPARATUS FOR PRODUCING A CENTRED COMPRESSION COATED TABLET
(71) Jagotec AG, Eptingerstrasse 61, 4132 Muttenz, CH
(72) VERGNAULT, Guy, 9, rue des Merles, F-68680 Kembs Loechle, FR;
GRENIER, Pascal, Résidence la Clef des Champs, 5, rue des Vignes, F-68300 Kappelen, FR
(74) Bassil, Nicholas Charles, et al, Kilburn & Strode LLP, 20 Red Lion Street, London WC1R 4PJ, GB

(51) (8) **EP 2313264 ***
B 31F 1/28
B 32B 7/14
B 31F 5/04
B 32B 29/08
(30) NZ 27.05.2008. 56869808
(86) PCT/NZ2009000085 26.05.2009.
(96) EP 09755098.2 26.05.2009. En
(87) WO2009145642 03.12.2009. 200949
(97) EP 2313264 27.04.2011. 201117 En
(54) METHOD OF FORMING SINGLE FACE CORRUGATED BOARD
(71) Corcel IP Limited, KPMG Centre, 85 Alexandra Street, Hamilton 3204, NZ
(72) VAN BERLO, Patrick Petrus Antonius Maria, 22 Rangatira Street, Karapiro, Cambridge 3494, NZ
(74) Wilson Gunn, 5th Floor, Blackfriars House, The Parsonage, Manchester, Lancashire M3 2JA, GB

(51) (8) **EP 2315664 ***
B 32B 11/00
(30) US 07.08.2008. 188214 P
US 04.08.2009. 534950

(86) PCT/US2009052932 06.08.2009.
(96) EP 09805535.3 06.08.2009. En
(87) WO2010017347 11.02.2010. 201006
(97) EP 2315664 04.05.2011. 201118 En
(54) MATTE SUBSTRATE
(71) Ashland Licensing and Intellectual Property LLC, 5200 Blazer Parkway, Dublin, OH 43017, US
(72) OSCAR, Dennis, J., 7900 North Salisbury Road, West Bend, WI 53190, US;
WASSERMAN, Charles, J., W232 S5990 Charles Drive, Waukesha, WI 53189, US
(74) Bülle, Jan, et al, Patentanwälte Kutzenberger & Wolff, Theodor-Heuss-Ring 23, 50668 Köln, DE

(51) (8) **EP 2305464**
B 41C 1/045
(96) EP 09012371.2 30.09.2009. De
(97) EP 2305464 06.04.2011. 201114 De
(54) Method for engraving a surface, a surface of a printing plate for gravure printing and a surface produced according to the method
(71) Weidlich, Ernst-Rudolf, Dr., Polmerheide 1, 59510 Lippetal, DE
(72) Weidlich, Ernst-Rudolf, DR., Polmerheide 1, 59510 Lippetal, DE
(74) Niedmers, Ole, Patentanwälte, Niedmers Jaeger Köster, Van-der-Smissen-Strasse 3, 22767 Hamburg, DE

(51) (8) **EP 2236307**
B 41M 5/025
B 41M 5/035
B 41M 5/52
(96) EP 09004614.5 30.03.2009. De
(97) EP 2236307 06.10.2010. 201040 De
(54) Production of transfer paper for inkjet printing
(71) Azourite Ventures, Ltd., 20 Solonos Street, P.O. Box 53669, 3317 Limassol, CY
(72) Martinovic, ZVONimir, K.P. Kresimira IV 5, 4200 Varazdin, HR
(74) Weiss, Wolfgang, et al, Weickmann & Weickmann, Patentanwälte, Postfach 86 08 20, 81635 München, DE

(51) (8) **EP 2301782**
B 60J 1/18
(30) US 30.10.2006. 855261 P
(96) EP 10075354.0 15.10.2007. En
(97) EP 2301782 30.03.2011. 201113 En
(54) Vehicle window assembly with horizontal slider
(71) Pilkington North America, Inc., 811 Madison Avenue, Toledo, Ohio 43697, US
(72) Seiple, Shane C., 301 Blue Jacket Road, Perrysburg, OH 43551, US;
Ash, Charles E., 598 South Ridge Road, Perrysburg, OH 43551, US;
Voght, H. Richard, 9229 Milcroft Road, Perrysburg, OH 43551, US
(74) Pfenning, Meinig & Partner GbR, Patent- und Rechtsanwälte, Joachimstaler Strasse 12, 10719 Berlin, DE

(51) (8) **EP 2181902**
B 60S 3/06
(30) IT 30.10.2008. MI20080038
(96) EP 09174291.6 28.10.2009. En
(97) EP 2181902 05.05.2010. 201018 En
(54) Double-gantry car wash installation, and corresponding method
(71) Autoequip Lavaggi S.p.A., Zona Industriale, 14059 Vesime (AT), IT
(72) Marengo, Ferruccio, c/o AUTOEQUIP LAVAGGI S.p.A., Zona Industriale, 14059, VESIME (AT), IT;
Ferrino, Massimo, c/o AUTOEQUIP LAVAGGI S.p.A., Zona Industriale, 14059, VESIME (AT), IT;
Brusco, Mauro, c/o AUTOEQUIP LAVAGGI S.p.A., Zona Industriale, 14059, VESIME (AT), IT
(74) Minoja, Fabrizio, Bianchetti Bracco Minoja S.r.l., Via Plinio, 63, 20129 Milano, IT

(51) (8) **EP 2003037**
B 61C 5/00
B 61C 17/04
(30) FR 15.06.2007. 0755784
(96) EP 08103782.2 30.04.2008. Fr
(97) EP 2003037 17.12.2008. 200851 Fr
(54) Device for attaching a drive system to the chassis of a self-propelled vehicle and self-propelled vehicle comprising such a device
(71) ALSTOM Transport SA, 3, avenue André Malraux, 92300 Levallois-Perret, FR
(72) Peter, Sébastien, 191, rue Principale, 67160, SCHLEITHAL, FR
(74) Domenego, Bertrand, Cabinet Lavoix, 2, place d'Estienne d'Orves, 75441 Paris Cedex 09, FR

(51) (8) **EP 2301821**
B 61F 5/22
B 61D 3/10
(30) ES 22.07.2008. 200802171
(86) PCT/ES2009070300 22.07.2009.
(96) EP 09784133.2 22.07.2009. Es
(87) WO2010010221 28.01.2010. 201004
(97) EP 2301821 30.03.2011. 201113 En
(54) DEVICES FOR MOVING THE BUFFERS OF ARTICULATED CARS OF RAILWAY VEHICLES TRAVELLING ON A CURVE
(71) Patentes Talgo, S.L., Paseo del Tren Talgo 2, Las Matas, 28290 Madrid, ES
(72) LÓPEZ GÓMEZ, José Luis, c/ Mizar 10, E-28023 Madrid, ES
(74) Elzaburu Marquez, Alberto, Elzaburu S.L.P., Miguel Angel 21, 2r, 28010 Madrid, ES

(51) (8) **EP 2300311 ***
B 63C 5/02
E 04G 1/22
(30) IT 05.06.2008. BO20080352
(86) PCT/IB2009005779 29.05.2009.
(96) EP 09757848.8 29.05.2009. It
(87) WO2009147494 10.12.2009. 200950
(97) EP 2300311 30.03.2011. 201113 En
(54) SUPPORT PLATFORM FOR WORKERS DEALING WITH MAINTENANCE AND CONSTRUCTION OF MEANS OF TRANSPORT
(71) Officine Meccaniche Ricci S.R.L., Via Gruccia 57, 52027 S. Giovanni (AR), IT
(72) RICCI, Francesco, Via Oliveto 8, I-52024 Loro Ciuffenna (AR), IT

(74) Pistolesi, Roberto, et al, Dragotti & Associati Srl, Via Marina 6, 20121 Milano, IT

(51) (8) **EP 2310263** *
B 64C 27/00
F 16F 15/36
(30) EP 08.07.2008. 08159921
EP 10.09.2008. 08164059
EP 12.11.2008. 08168913
EP 22.04.2009. 09158505
(86) PCT/EP2009058691 08.07.2009.
(96) EP 09793950.8 08.07.2009. En
(87) WO2010003988 14.01.2010. 201002
(97) EP 2310263 20.04.2011. 201116 En
(54) METHOD, APPARATUS AND SYSTEM FOR REDUCING VIBRATION IN A ROTARY SYSTEM OF AN AIRCRAFT, SUCH AS A ROTOR OF A HELICOPTER
(71) Carnehammar, Lars Bertil, Sonnenbergstrasse 126, 8050 Zürich, CH
(72) SEITZ, Norbert, Riegseestrasse 3, 82194 Gröbenzell, DE

(51) (8) **EP 2321183** *
B 65B 25/04
B 65B 19/34
B 65B 5/04
(30) IT 10.07.2008. MI20081257
(86) PCT/EP2009056478 27.05.2009.
(96) EP 09793897.1 27.05.2009. En
(87) WO2010003731 14.01.2010. 201002
(97) EP 2321183 18.05.2011. 201120 En
(54) PADDING MACHINE FOR PACKAGING SUBSTANTIAL PRODUCTS, PARTICULARLY CUCUMBERS AND THE LIKE
(71) Zanichelli Meccanica S.p.A., Via Mantova, 65, 43100 Parma, IT
(72) PAGANI, Caterina, Via Mantova 65, I-43100 Parma, IT
(74) Modiano, Micaela Nadia, et al, Modiano & Partners, Via Meravigli, 16, 20123 Milano, IT

(51) (8) **EP 2230181**
B 65B 35/50
B 65G 57/03
B 65B 61/24
(30) DE 16.03.2009. 102009001586
(96) EP 09159242.8 30.04.2009. De
(97) EP 2230181 22.09.2010. 201038 De
(54) Machine and method for grouping containers
(71) Robert Bosch GmbH, Postfach 30 02 20, 70442 Stuttgart, DE
(72) Zill, Tobias, Pliensbacher Weg 23, 73110 Hattenhofen, DE

(51) (8) **EP 2223857**
B 65B 43/14
B 65B 43/46
(30) IT 26.02.2009. MI20090286
(96) EP 10001793.8 23.02.2010. En
(97) EP 2223857 01.09.2010. 201035 En
(54) Automatic machine for packaging products in fabric bags
(71) Calloni, Sergio, Via G. Leopardi 2, 20020 Arconate (MI), IT
(72) Calloni, Sergio, Via G. Leopardi 2, 20020 Arconate (MI), IT
(74) Beneduce, Gianna, Via Poggibonsi 7, 20146 Milano, IT

(51) (8) **EP 2293990** *
B 65D 43/02
(30) DE 27.05.2008. 102008025430
DE 27.05.2008. 102008025429
(86) PCT/EP2009056489 27.05.2009.
(96) EP 09765734.0 27.05.2009. De
(87) WO2009153154 23.12.2009. 200952
(97) EP 2293990 16.03.2011. 201111 De
(54) CLOSURE DEVICE FOR A CONTAINER
(71) Cliqloc GmbH, Schmiedhofsweg 1, 50769 Köln, DE
(72) ENDERT, Guido, Rothenberg 96, 42799 Leichlingen, DE
(74) Vogel, Andreas, et al, Bals & Vogel, Universitätsstrasse 142, 44799 Bochum, DE

(51) (8) **EP 2308773**
B 65D 83/08
A 47K 7/00
(30) JP 02.07.2008. 2008174009
(86) PCT/JP2009061987 30.06.2009.
(96) EP 09773481.8 30.06.2009. Ja
(87) WO2010001903 07.01.2010. 201001
(97) EP 2308773 13.04.2011. 201115 En
(54) CONTAINING DEVICE
(71) Unicharm Corporation, 182 Shimobun, Kinsei-cho, Shikokuchuo-shi, Ehime 799-0111, JP
(72) MIYAKE Daisuke, c/o UNI-CHARM CORPORATION, Technical Center, 1531-7 Wadahama, Toyohama-cho, Kanonji-shi, Kagawa 769-1602, JP;
BANDOH Takeshi, c/o UNI-CHARM CORPORATION, Technical Center, 1531-7 Wadahama, Toyohama-cho, Kanonji-shi, Kagawa 769-1602, JP
(74) Murgatroyd, Susan Elizabeth, et al, Baron Warren Redfern, 19 South End, Kensington, London, W8 5BU, GB

(51) (8) **EP 2308774**
B 65D 83/08
A 47K 7/00
(30) JP 02.07.2008. 2008174010
(86) PCT/JP2009061988 30.06.2009.
(96) EP 09773482.6 30.06.2009. Ja
(87) WO2010001904 07.01.2010. 201001
(97) EP 2308774 13.04.2011. 201115 En
(54) PACKAGE BODY
(71) Unicharm Corporation, 182 Shimobun, Kinsei-cho, Shikokuchuo-shi, Ehime 799-0111, JP
(72) UEDA Takahiro, c/o UNI-CHARM CORPORATION, Technical Center, 1531-7 Wadahama, Toyohama-cho, Kanonji-shi, Kagawa 769-1602, JP;
TAKEDA Eisuke, c/o UNI-CHARM CORPORATION, Technical Center, 1531-7 Wadahama, Toyohama-cho, Kanonji-shi, Kagawa 769-1602, JP
(74) Murgatroyd, Susan Elizabeth, et al, Baron Warren Redfern, 19 South End, Kensington, London, W8 5BU, GB

(51) (8) **EP 2230194**
B 65D 85/04
B 65D 5/60
(30) FR 18.03.2009. 0951713
(96) EP 10155331.1 03.03.2010. Fr

(97) EP 2230194 22.09.2010. 201038 Fr
(54) Packaging for a plurality of coils of feedwire
(71) L'AIR LIQUIDE, Société Anonyme pour l'Etude, et l'Exploitation des Procédés Georges Claude, Direction de la Propriété Intellectuelle, 75 quai d'Orsay, 75007 Paris, FR;
AIR LIQUIDE WELDING FRANCE, 75, Quai d'Orsay, 75007 Paris, FR
(72) Leduey, Bruno, 25, Chemin Depuis Vert, 95000, CERGY, FR
(74) Pittis, Olivier, L'Air Liquide, S.A., Direction de la Propriété Intellectuelle, 75, Quai d'Orsay, 75321 Paris Cedex 07, FR

(51) (8) **EP 2307288 ***
B 65D 85/804
A 47J 31/06
(30) EP 17.06.2009. 09162917
EP 17.06.2009. 09162941
EP 17.06.2009. 09162927
EP 17.06.2009. 09162984
(86) PCT/NL2009050832 30.12.2009.
(96) EP 09796124.7 30.12.2009. En
(87) WO2010137961 02.12.2010. 201048
(97) EP 2307288 13.04.2011. 201115 En
(54) SYSTEM, METHOD AND CAPSULE FOR PREPARING A BEVERAGE
(71) Sara Lee/DE N.V., Keulsekade 143, 3532 AA Utrecht, NL
(72) KAMERBEEK, Ralf, Ten Veldestraat 59, NL-3454 EJ De Meern, NL;
FLAMAND, John Henri, Meluntersewegh 72, NL-6741 HP Lunteren, NL;
POST VAN LOON, Angenita Dorothea, Weerschijnvlinder 11, NL-3544 DT Utrecht, NL;
KOELING, Hendrik Cornelis, Harderwijkkade 11, NL-3826 BE Amersfoort, NL
(74) Jansen, Cornelis Marinus, VEREENIGDE, Johan de Wittlaan 7, 2517 JR Den Haag, NL

(51) (8) **EP 2310301 ***
B 65D 85/804
A 47J 31/06
(30) EP 17.06.2009. 09162927
EP 17.06.2009. 09162941
EP 17.06.2009. 09162917
EP 17.06.2009. 09162984
(86) PCT/NL2009050834 30.12.2009.
(96) EP 09796126.2 30.12.2009. En
(87) WO2010137963 02.12.2010. 201048
(97) EP 2310301 20.04.2011. 201116 En
(54) SYSTEM, METHOD AND CAPSULE FOR PREPARING A BEVERAGE
(71) Sara Lee/DE N.V., Keulsekade 143, 3532 AA Utrecht, NL
(72) KAMERBEEK, Ralf, Ten Veldestraat 59, NL-3454 EJ De Meern, NL;
FLAMAND, John Henri, Meluntersewegh 72, NL-6741 HP Lunteren, NL;
POST VAN LOON, Angenita Dorothea, Weerschijnvlinder 11, NL-3544 DT Utrecht, NL;
KOELING, Hendrik Cornelis, Harderwijkkade 11, NL-3826 BE Amersfoort, NL
(74) Jansen, Cornelis Marinus, et al, VEREENIGDE, Johan de Wittlaan 7, 2517 JR Den Haag, NL

(51) (8) **EP 2313330 ***
B 65D 88/00
(30) US 23.07.2008. 178377
(86) PCT/US2009046165 03.06.2009.
(96) EP 09800746.1 03.06.2009. En
(87) WO2010011421 28.01.2010. 201004
(97) EP 2313330 27.04.2011. 201117 En
(54) TRANSPORTABLE, MODULAR, SELF CONTAINED SHIPPING CONTAINER BUILDING
(71) Green, James E., 920 148 th Pl. SE, Mill Creek, WA 98012, US
(72) Green, James E., 920 148 th Pl. SE, Mill Creek, WA 98012, US
(74) Russell, Tim, D Young & Co LLP, 120 Holborn, London EC1N 2DY, GB

(51) (8) **EP 2297011 ***
B 65G 53/50
(30) SE 24.06.2008. 0801491
(86) PCT/SE2009050765 18.06.2009.
(96) EP 09770482.9 18.06.2009. En
(87) WO2009157857 30.12.2009. 200953
(97) EP 2297011 23.03.2011. 201112 En
(54) METHOD AND DEVICE FOR OUTPUT OF GRANULATE FROM THE BOTTOM OF A TANK THAT IN ADDITION TO GRANULATE HOLDS LIQUID
(71) Uvån Hagfors Teknologi Aktiebolag, Geijersvägen 6, 683 40 Uddeholm, SE
(72) LUNDSTRÖM, Christoffer, Eskadervägen 44, S-183 58 Täby, SE;
FOLGERÖ, Kåre, Stafettgatan 3, S-722 41 Västerås, SE
(74) Johansson, Lars E., P.O. Box 138, 683 23 Hagfors, SE

(51) (8) **EP 2223883**
B 66F 7/28
(30) DE 26.02.2009. 102009010826
DE 06.03.2009. 102009012047
(96) EP 10154390.8 23.02.2010. De
(97) EP 2223883 01.09.2010. 201035 De
(54) Assembly and repair device
(71) Balzer, Hans, Diepolderstraße 1, 87700 Memmingen, DE
(72) Balzer, Hans, Diepolderstraße 1, 87700 Memmingen, DE
(74) Popp, Eugen, Meissner, Bolte & Partner GbR, Postfach 86 06 24, 81633 München, DE

(51) (8) **EP 2321216 ***
B 81C 1/00
B 81B 7/02
H 05K 5/06
(30) FR 01.08.2008. 0855357
(86) PCT/FR2009051544 31.07.2009.
(96) EP 09740426.3 31.07.2009. Fr
(87) WO2010012966 04.02.2010. 201005
(97) EP 2321216 18.05.2011. 201120 Fr
(54) METHOD AND DEVICE FOR ENCAPSULATING MICROSTRUCTURES
(71) Kfm Technology, ZA Courtaboeuf 1, 11 rue de Norvege, 91140 Villebon sur Yvette, FR
(72) BRAULT, Sébastien, 46 rue Eugne Moutard Martin, F-91460 Marcoussis, FR;
DUFOUR-GERGAM, Elisabeth, 2 allée Valéry Larbaud, F-92260 Fontenay aux Roses, FR;

DESGEORGES, Martial, Chemin du Poteau Blanc, F-91460 Marcoussis, FR
(74) Legrand, Olivier, Pontet Allano & Associés, 25, rue Jean Rostand, Parc Orsay Université, FR-91893 Orsay Cedex, FR

(51) (8) **EP 2303773 ***
C 01B 17/04
B 01D 53/48
(30) US 15.07.2008. 173605
(86) PCT/US2009003959 07.07.2009.
(96) EP 09788868.9 07.07.2009. En
(87) WO2010008503 21.01.2010. 201003
(97) EP 2303773 06.04.2011. 201114 En
(54) COMPACT, TIERED SULFUR RECOVERY UNIT
(71) Born, Sidney Leroy, 50 Lansing Street, No. 704, San Francisco, CA 94105, US
(72) Born, Sidney Leroy, 50 Lansing Street, No. 704, San Francisco, CA 94105, US
(74) Tomkinson, Alexandra, Bailey Walsh & Co L.L.P., 5 York Place, Leeds LS1 2SD, GB

(51) (8) **EP 2303774 ***
C 01B 31/00
H 01M 4/38
H 01M 4/04
H 01M 4/08
H 01M 4/58
(30) DE 15.07.2008. 102008033097
DE 30.08.2008. 102008045231
(86) PCT/EP2009005110 14.07.2009.
(96) EP 09777180.2 14.07.2009. De
(87) WO2010006763 21.01.2010. 201003
(97) EP 2303774 06.04.2011. 201114 De
(54) INTERCALATION OF SILICON AND/OR TIN INTO POROUS CARBON SUBSTRATES
(71) Universität Duisburg-Essen, Universitätsstrasse 2, 45141 Essen, DE
(72) SCHULZ, Christof, Ehrenstrasse 30, 50672 Köln, DE; WIGGERS, Hartmut, Riesweg 33, 48734 Reken, DE
(74) Strehlke, Ingo Kurt, et al, Gesthuysen, von Rohr & Eggert, Postfach 10 13 54, 45013 Essen, DE

(51) (8) **EP 2297034 ***
C 01B 33/025
C 01B 33/037
C 30B 13/00
(30) IT 16.06.2008. MI20081085
(86) PCT/EP2009056477 27.05.2009.
(96) EP 09765731.6 27.05.2009. En
(87) WO2009153151 23.12.2009. 200952
(97) EP 2297034 23.03.2011. 201112 En
(54) METHOD FOR PREPARING HIGH-PURITY METALLURGICAL-GRADE SILICON
(71) N.E.D. Silicon S.P.A., Via Thomas Edison 6, 60027 Osimo, IT
(72) PIZZINI, Sergio, Via degli Iris 8c, I-21018 Sesto Calende, IT
(74) Modiano, Micaela Nadia, et al, Dr. Modiano & Associati SpA, Via Meravigli 16, 20123 Milano, IT

(51) (8) **EP 2297035 ***
C 01B 33/025
C 01B 33/037
C 30B 13/00
(30) IT 16.06.2008. MI20081086
(86) PCT/EP2009056482 27.05.2009.
(96) EP 09765732.4 27.05.2009. En
(87) WO2009153152 23.12.2009. 200952
(97) EP 2297035 23.03.2011. 201112 En
(54) METHOD AND APPARATUS FOR PURIFYING METALLURGICAL GRADE SILICON BY DIRECTIONAL SOLIDIFICATION AND FOR OBTAINING SILICON INGOTS FOR PHOTOVOLTAIC USE
(71) N.E.D. Silicon S.P.A., Via Thomas Edison 6, 60027 Osimo, IT
(72) PIZZINI, Sergio, Via degli Iris 8c, I-21018 Sesto Calende, IT
(74) Modiano, Micaela Nadia, et al, Dr. Modiano & Associati SpA, Via Meravigli 16, 20123 Milano, IT

(51) (8) **EP 2318313 ***
C 01B 33/037
B 01J 8/18
(30) US 26.02.2009. 393852
(86) PCT/US2009065345 20.11.2009.
(96) EP 09840944.4 20.11.2009. En
(87) WO2010098797 02.09.2010. 201035
(97) EP 2318313 11.05.2011. 201119 En
(54) FLUIDIZED BED REACTOR FOR PRODUCTION OF HIGH PURITY SILICON
(71) Siliken Chemicals S.L., Isaac Peral y Caballero 14, Parque Tecnologico, 46980 Paterna Valencia, ES
(72) SAN SEGUNDO SANCHEZ, Javier, Generalitat 12, E-46120 Alboraya, ES;
MONTESINOS BARONA, Jose Luis, Deque de Liria 18, 13, E-46160 Lliria, ES;
AYUSO CONEJERO, Evaristo, Fray Luis Colomer 6, E-46021 Valencia, ES;
VALES CANLE, Manuel Vicente, Baleares 48, E-46023 Valencia, ES;
BENAVIDES REL, Xavier, Calvario 25, E-46133 Meliana, ES;
LUJAN GARCIA, Pedro-Tomas, Leonardo da Vinci 38, E-46980 Paterna, ES
(74) Bradley, Adrian, et al, Cleveland, 40-43 Chancery Lane, London WC2A 1JQ, GB

(51) (8) **EP 2294012 ***
C 01G 3/00
(30) US 07.05.2008. 51341
(86) PCT/US2009043138 07.05.2009.
(96) EP 09743658.8 07.05.2009. En
(87) WO2009137672 12.11.2009. 200946
(97) EP 2294012 16.03.2011. 201111 En
(54) METHODS OF TREATING BOWEL DISEASE BY ADMINISTERING A BOWEL CLEANSER AND AN ANTIBIOTIC
(71) Salix Pharmaceuticals, Ltd., 1700 Perimeter Park Drive, Morrisville, NC 27560, US
(72) JOHNSON, Lorin, 195-a Bryant Street, Palo Alto, CA 94301, US;

FORBES, William, 1008 Heydon Court, Raleigh, NC 27614, US;
PATTON, Stephana, 912 Union St., San Francisco, CA 94133, US
(74) Adam, Holger, Kraus & Weisert, Patent- und Rechtsanwälte, Thomas-Wimmer-Ring 15, 80539 München, DE

(51) (8) **EP 2297050** *
C 02F 9/08
C 02F 1/42
C 02F 103/04
B 01J 47/04
C 02F 9/04
C 02F 103/12
C 02F 103/34
C 02F 1/28
C 02F 1/04
C 02F 1/52
C 02F 9/00
(30) IT 15.05.2008. PD20080143
(86) PCT/EP2009055871 14.05.2009.
(96) EP 09745808.7 14.05.2009. En
(87) WO2009138476 19.11.2009. 200947
(97) EP 2297050 23.03.2011. 201112 En
(54) APPARATUS FOR TREATING WASTEWATER, PARTICULARLY WASTEWATER ORIGINATING FROM A PROCESS FOR THE PRODUCTION OF PHOTOVOLTAIC CELLS
(71) Helios Technology S.P.S., Via Postumia 9/B, 35010 Carmignano Di Brenta, IT;
S.A.I.T.A. S.R.L., Via Pierobon 2, 35010 Limena, IT
(72) MARTINI, Ferdinando, Via Capodichino 5, I-36030 Caldogno, IT;
CASTELLI, Gianluca, Via Pietro D'Abano 32/Int. 10, I-35011 Campodarsego, IT;
TRAVERSO, Franco, Via Provinciale 7, I-35010 Carmignano Di Brenta, IT;
RAGNI, Andrea, Via Carlo Mollino 9, I-36100 Vicenza, IT
(74) Modiano, Micaela Nadia, et al, Dr. Modiano & Associati SpA, Via Meravigli 16, 20123 Milano, IT

(51) (8) **EP 2310331** *
C 03B 7/06
(30) IT 07.08.2008. PR20080050
(86) PCT/IB2009053290 29.07.2009.
(96) EP 09804624.6 29.07.2009. En
(87) WO2010015964 11.02.2010. 201006
(97) EP 2310331 20.04.2011. 201116 En
(54) FOREHEARTH OR WORKING-END FOR GLASS FURNACE AND PROCEDURE FOR THE EXTRACTION OF FUMES FROM THE FOREHEARTH
(71) F.I.R.E. S.r.l., Via Q. Sella, 23/A, 43126 Parma, IT
(72) BRAGLIA, Marco, c/o F.I.R.E. S.r.l., Via Q. Sella, 23/A, I-43126 Parma, IT
(74) Monelli, Alberto, C/0 BUGNION S.P.A, Largo Michele Novaro, 1/A, 43121 PARMA ITALY, IT

(51) (8) **EP 2297054** *
C 03B 19/08
(30) GB 23.05.2008. 0809441
US 23.05.2008. 55733
(86) PCT/EP2009056329 25.05.2009.
(96) EP 09749946.1 25.05.2009. En
(87) WO2009141456 26.11.2009. 200948
(97) EP 2297054 23.03.2011. 201112 En
(54) CELLULAR CERAMIC PLATES WITH ASYMMETRICAL CELL STRUCTURE AND MANUFACTURING METHOD THEREOF
(71) Pittsburgh Corning Europe Nv, Albertkade 1, 3980 Tessenderlo, BE
(72) STRAUVEN, Hans, Sparrenweg 17, B-3560 Lummen, BE
(74) Bird, William Edward, et al, Bird Goën & Co, Klein Dalenstraat 42A, 3020 Winksele, BE

(51) (8) **EP 2230223**
C 04B 2/10
(30) DE 19.03.2009. 102009013935
(96) EP 10156025.8 10.03.2010. De
(97) EP 2230223 22.09.2010. 201038 De
(54) Method and device for producing calcium
(71) Messer Group GmbH, Otto-Volger-Strasse 3c, 65843 Sulzbach, DE
(72) Grohmann, Paul, Dreisteinstr. 43, A-2372, Gießhübl, DE

(51) (8) **EP 2294029** *
C 04B 28/02
E 01C 1/00
E 01C 11/22
(30) IT 29.04.2008. MI20080787
(86) PCT/EP2009055112 28.04.2009.
(96) EP 09738138.8 28.04.2009. En
(87) WO2009133094 05.11.2009. 200945
(97) EP 2294029 16.03.2011. 201111 En
(54) A PAVING WITH A POLLUTION-ABATING ACTIVITY AND A PHOTOCATALYTIC MIXTURE FOR ITS PREPARATION
(71) ITALCEMENTI S.p.A., Via G. Camozzi, 124, 24121 Bergamo, IT
(72) GUERRINI, Gian Luca, Piazza Giovanni XXIII 3, I-20063 Cernusco Sul Naviglio, IT;
GRELAUD, Jean-Pierre, 155 Grande Rue, Sandracourt, F-78520 Saint Martin La Garenne, FR
(74) Appoloni, Romano, et al, Notarbartolo & Gervasi S.P.A., Corso di Porta Vittoria, 9, 20122 Milano, IT

(51) (8) **EP 2210866**
C 04B 28/14
F 24D 3/14
C 04B 14/00
(30) EP 16.12.2008. 08171829
(96) EP 09179498.2 16.12.2009. De
(97) EP 2210866 28.07.2010. 201030 De
(54) Thin-layer heat screed construction on partition and insulating layer
(71) Knauf Gips KG, Am Bahnhof 7, 97346 Iphofen, DE
(72) Seifert, Andreas, Panoramaweg 11, 97318 Kitzingen, DE; Umlauf, Richard, Plattenbergstrasse 11, 78628 Rottweil, DE; Baumann, Michael, Kolpingstrasse 20, 97337 Dettelbach, DE
(74) von Kreisler Selting Werner, Deichmannhaus am Dom, Bahnhofsvorplatz 1, 50667 Köln, DE

(51) (8) **EP 2310342 ***
C 05F 11/02
B 01F 17/52
B 01F 17/56
B 09C 1/08
(30) IT 29.07.2008. RM20080407
(86) PCT/IT2009000332 27.07.2009.
(96) EP 09787804.5 27.07.2009. It
(87) WO2010013275 04.02.2010. 201005
(97) EP 2310342 20.04.2011. 201116 En
(54) PROCESS FOR THE PREPARATION OF FERTILIZER AND SURFACTANT NATURAL COMPOSITIONS FOR WASHING, RECLAMATION AND CULTIVATION OF CONTAMINATED SOILS AND RELATED COMPOSITIONS
(71) Fertirev SRL, Via Cernaia n. 31, 10121 Torino, IT
(72) TERENZIO, Domenico, Via San Raffaele 9 bis, I-4022 Fondi (LT), IT
(74) Gitto, Serena, et al, Barzanò & Zanardo Roma S.p.A., Via Piemonte, 26, 00187 Roma, IT

(51) (8) **EP 2300398 ***
C 07C 2/02
(30) US 13.06.2008. 138877
US 03.06.2009. 477319
(86) PCT/US2009047149 12.06.2009.
(96) EP 09763691.4 12.06.2009. En
(87) WO2009152403 17.12.2009. 200951
(97) EP 2300398 30.03.2011. 201113 En
(54) PROCESSES FOR CONVERTING GASEOUS ALKANES TO LIQUID HYDROCARBONS
(71) Marathon GTF Technology, Ltd., 5555 San Felipe, Houston, TX 77056-2799, US
(72) WAYCUILIS, John, J., 14902 Quail Farms Road, Cypress, TX 77429, US;
TURNER, William, J., 1223 Goldendale Drive, Seabrook, TX 77586, US;
THOMAS, Raphael, 1751 Babcock Road, Apt. 818, San Antonio, TX 78229, US
(74) Mallalieu, Catherine Louise, et al, D Young & Co LLP, 120 Holborn, London EC1N 2DY, GB

(51) (8) **EP 2297072 ***
C 07C 4/04
C 07C 7/04
C 07C 11/04
C 07C 17/02
C 07C 19/045
(30) EP 03.06.2008. 08157515
(86) PCT/EP2009056638 29.05.2009.
(96) EP 09757481.8 29.05.2009. En
(87) WO2009147100 10.12.2009. 200950
(97) EP 2297072 23.03.2011. 201112 En
(54) PROCESS FOR THE MANUFACTURE OF 1,2-DICHLOROETHANE AND OF AT LEAST ONE ETHYLENE DERIVATIVE COMPOUND DIFFERENT FROM 1,2-DICHLOROETHANE
(71) SOLVAY (Société Anonyme), Rue du Prince Albert, 33, 1050 Bruxelles, BE
(72) LEMPEREUR, Michel, Rue du Baty 12, B-1435 Corbais, BE;
BALTHASART, Dominique, Rue du Ch?teau Beyaerd 150, B-1120 Brussels, BE;
STREBELLE, Michel, Rue Sombre 84, B-1150 Brussels, BE;
GIANSANTE, Massimo, Avenue Joséphine Charlotte 15, B-1330 Rixensart, BE
(74) Jacques, Philippe, et al, Solvay S.A., Département de la Propriété Industrielle, Rue de Ransbeek, 310, 1120 Bruxelles, BE

(51) (8) **EP 2316809**
C 07C 13/48
C 07C 209/62
C 07C 211/60
C 07C 13/19
C 07C 17/26
C 07C 17/30
(30) EP 12.12.2005. 05027072
EP 21.04.2006. 06008248
(96) EP 11153843.5 11.12.2006. En
(97) EP 2316809 04.05.2011. 201118 En
(54) Process for the preparation of benzonorbornane derivatives
(71) Syngenta Participations AG, Schwarzwaldallee 215, 4058 Basel, CH
(72) Tobler, Hans, Birsigstrasse 129, 4054 Basel, CH;
Walter, Harald, Syngenta Crop Protection Münchwilen AG, Schaffhauserstrasse, 4332 Stein, CH;
Corsi, Camilla, Syngenta Crop Protection Münchwilen AG, Schaffhauserstrasse, 4332 Stein, CH;
Ehrenfreund, Josef, Mühlebachweg 29, 4123 Allschwil, CH;
Giordano, Fanny, Syngenta Crop Protection AG, Schwarzwaldallee 215, 4058 Basel, CH;
Zeller, Martin, Syngenta Crop Protection Münchwilen AG, Breitenloh 5, 4333 Münchwilen, CH
(74) Thwaite, Jonathan Simon, Syngenta Crop Protection, Münchwilen AG, Intellectual Property, Schaffhauserstrasse, 4332 Stein, CH

(51) (8) **EP 2310346 ***
C 07C 17/00
(30) US 13.06.2008. 61475 P
US 03.06.2009. 477307
(86) PCT/US2009047162 12.06.2009.
(96) EP 09763696.3 12.06.2009. En
(87) WO2009152408 17.12.2009. 200951
(97) EP 2310346 20.04.2011. 201116 En
(54) BROMINE-BASED METHOD AND SYSTEM FOR CONVERTING GASEOUS ALKANES TO LIQUID HYDROCARBONS USING ELECTROLYSIS FOR BROMINE RECOVERY
(71) Marathon GTF Technology, Ltd., 5555 San Felipe, Houston, TX 77056-2799, US
(72) WAYCUILIS, John, J., 14902 Quail Farms Road, Cypress, TX 77429, US
(74) Mallalieu, Catherine Louise, et al, D Young & Co LLP, 120 Holborn, GB-London EC1N 2DY, GB

(51) (8) **EP 2303816 ***
C 07C 17/02
C 07C 17/156
C 07C 17/25
C 07C 19/045
C 07C 21/06
(30) EP 03.06.2008. 08157513
(86) PCT/EP2009056600 29.05.2009.
(96) EP 09757465.1 29.05.2009. En

(87) WO2009147083 10.12.2009. 200950
(97) EP 2303816 06.04.2011. 201114 En
(54) PROCESS FOR THE MANUFACTURE OF AT LEAST ONE ETHYLENE DERIVATIVE COMPOUND
(71) SOLVAY (Société Anonyme), Rue du Prince Albert, 33, 1050 Bruxelles, BE
(72) LEMPEREUR, Michel, Rue du Baty 12, 1435 Corbais, BE;
BALTHASART, Dominique, Rue du Ch?teau Beyaerd 150, 1120 Brussels, BE;
STREBELLE, Michel, Rue Sombre 84, 1150 Brussels, BE;
KÖTTER, Joachim, Ring 72, 04416 Markkleeberg, DE;
WINKLER, Hans-Dieter, Otto-Michael-Str. 49, 04357 Leipzig, DE;
MEWS, Peter, Obere Dorfstr. 49, 09648 Mittweida, DE
(74) Vande Gucht, Anne, et al, Solvay S.A., Intellectual Assets Management, Rue de Ransbeek, 310, 1120 Bruxelles, BE

(51) (8) **EP 2307339 ***
C 07C 17/02
C 07C 17/156
C 07C 17/25
C 07C 19/045
C 07C 21/06
(30) EP 03.06.2008. 08157516
(86) PCT/EP2009056640 29.05.2009.
(96) EP 09757482.6 29.05.2009. En
(87) WO2009147101 10.12.2009. 200950
(97) EP 2307339 13.04.2011. 201115 En
(54) PROCESS FOR THE MANUFACTURE OF AT LEAST ONE ETHYLENE DERIVATIVE COMPOUND
(71) SOLVAY (Société Anonyme), Rue du Prince Albert, 33, 1050 Bruxelles, BE
(72) PETITJEAN, André, Avenue des Liserons 17, B-1020 Brussels, BE;
LEMPEREUR, Michel, Rue du Baty 12, B-1435 Corbais, BE;
BALTHASART, Dominique, Rue du Ch?teau Beyaerd 150, B-1120 Brussels, BE;
STREBELLE, Michel, Rue Sombre 84, B-1150 Brussels, BE
(74) Jacques, Philippe, et al, Solvay S.A., Intellectual Assets Management, Rue de Ransbeek, 310, 1120 Bruxelles, BE

(51) (8) **EP 2303820 ***
C 07C 17/42
(30) US 13.06.2008. 139135
(86) PCT/US2009047155 12.06.2009.
(96) EP 09763693.0 12.06.2009. En
(87) WO2009152405 17.12.2009. 200951
(97) EP 2303820 06.04.2011. 201114 En
(54) HYDROGENATION OF MULTI-BROMINATED ALKANES
(71) Marathon GTF Technology, Ltd., 5555 San Felipe, Houston, TX 77056-2799, US
(72) WAYCUILIS, John, J., 14902 Quail Farms Road, Cypress, TX 77429, US;
TURNER, William, J., 1223 Goldendale Drive, Seabrook, TX 77586, US
(74) Mallalieu, Catherine Louise, D Young & Co LLP, 120 Holborn, London EC1N 2DY, GB

(51) (8) **EP 2307343 ***
C 07C 46/00
C 07C 46/10
C 07D 213/70
C 07C 50/24
C 07C 50/32
(86) PCT/IL2008000892 30.06.2008.
(96) EP 08763648.6 30.06.2008. En
(87) WO2010001378 07.01.2010. 201001
(97) EP 2307343 13.04.2011. 201115 En
(54) PROCESS FOR THE EPIMERIZATION OF ATOVAQUONE ISOMER, ATOVAQUONE INTERMEDIATES AND MIXTURE THEREOF
(71) Chemagis Ltd., 29 Lehi Street, 51200 Bnei Brak, IL
(72) ZHU, Fuqiang, 1088 Chuansha Road, Pudong, Shanghai 201209, CN;
BEKHAZI, Michel, 31 Compton Cresent, Pointe Claire, Quebec H9R 5V6, CA
(74) Modiano, Micaela Nadia, et al, Modiano & Partners, Thierschstrasse 11, 80538 München, DE

(51) (8) **EP 2316813**
C 07C 209/06
C 07C 211/31
A 01N 45/02
(30) EP 12.12.2005. 05027072
EP 21.04.2006. 06008248
(96) EP 11153841.9 11.12.2006. En
(97) EP 2316813 04.05.2011. 201118 En
(54) Process for the preparation of amines
(71) Syngenta Participations AG, Schwarzwaldallee 215, 4058 Basel, CH
(72) Tobler, Hans, Birsigstrasse 129, 4054 Basel, CH;
Walter, Harald, Syngenta Crop Protection Münchwilen AG, Schaffhauserstrasse, 4332 Stein, CH;
Corsi, Camilla, Syngenta Crop Protection Münchwilen AG, Schaffhauserstrasse, 4332 Stein, CH;
Ehrenfreund, Josef, Mühlebachweg 29, 4123 Allschwil, CH;
Giordano, Fanny, Syngenta Crop Protection AG, Schwarzwaldallee 215, 4058 Basel, CH;
Zeller, Martin, Syngenta Crop Protection Münchwilen AG, Breitenloh 5, 4333 Münchwilen, CH
(74) Thwaite, Jonathan Simon, Syngenta Crop Protection, Münchwilen AG, Intellectual Property, Schaffhauserstrasse, 4332 Stein, CH

(51) (8) **EP 2316814**
C 07C 209/28
A 01N 45/02
C 07C 211/31
C 07C 13/19
C 07C 17/26
C 07C 17/30
C 07C 25/18
(30) EP 12.12.2005. 05027072
EP 21.04.2006. 06008248
(96) EP 11153845.0 11.12.2006. En
(97) EP 2316814 04.05.2011. 201118 En
(54) Process for preparation of halogen substituted benzonorbornenes derivatives
(71) Syngenta Participations AG, Schwarzwaldallee 215, 4058 Basel, CH
(72) Tobler, Hans, Birsigstrasse 129, 4054 Basel, CH;

Walter, Harald, Syngenta Crop Protection Münchwilen AG, Schaffhauserstrasse, 4332 Stein, CH;
Corsi, Camilla, Syngenta Crop Protection Münchwilen AG, Schaffhauserstrasse, 4332 Stein, CH;
Ehrenfreund, Josef, Mühlebachweg 29, 4123 Allschwil, CH;
Giordano, Fanny, Syngenta Crop Protection AG, Schwarzwaldallee 215, 4058 Basel, CH;
Zeller, Martin, Syngenta Crop Protection Münchwilen AG, Breitenloh 5, 4333 Münchwilen, CH
(74) Thwaite, Jonathan Simon, Syngenta Crop Protection, Münchwilen AG, Intellectual Property, Schaffhauserstrasse, 4332 Stein, CH

(51) (8) **EP 2316815**
C 07C 209/28
A 01N 45/02
C 07C 211/31
C 07C 13/19
C 07C 17/26
C 07C 17/30
C 07C 25/18
C 07C 23/10
(30) EP 12.12.2005. 05027072
EP 21.04.2006. 06008248
(96) EP 11153846.8 11.12.2006. En
(97) EP 2316815 04.05.2011. 201118 En
(54) Process for preparation of halogen substituted arynes
(71) Syngenta Participations AG, Schwarzwaldallee 215, 4058 Basel, CH
(72) Tobler, Hans, Birsigstrasse 129, 4054 Basel, CH;
Walter, Harald, Syngenta Crop Protection Münchwilen AG, Schaffhauserstrasse, 4332 Stein, CH;
Corsi, Camilla, Syngenta Crop Protection Münchwilen AG, Schaffhauserstrasse, 4332 Stein, CH;
Ehrenfreund, Josef, Mühlebachweg 29, 4123 Allschwil, CH;
Giordano, Fanny, Syngenta Crop Protection AG, Schwarzwaldallee 215, 4058 Basel, CH;
Zeller, Martin, Syngenta Crop Protection Münchwilen AG, Breitenloh 5, 4333 Münchwilen, CH
(74) Thwaite, Jonathan Simon, Syngenta Crop Protection, Münchwilen AG, Intellectual Property, Schaffhauserstrasse, 4332 Stein, CH

(51) (8) **EP 2321257 ***
C 07C 209/78
B 01J 21/12
B 01J 37/00
(30) US 14.08.2008. 88927 P
US 21.01.2009. 146193 P
(86) PCT/US2009053815 14.08.2009.
(96) EP 09791517.7 14.08.2009. En
(87) WO2010019844 18.02.2010. 201007
(97) EP 2321257 18.05.2011. 201120 En
(54) PRODUCTION OF MIXTURES OF METHYLENEDIANILINE AND ITS HIGHER HOMOLOGUES USING CALCINED METAL OXIDE-SILICA CATALYSTS
(71) Dow Global Technologies LLC, 2040 Dow Center, Midland, MI 48674, US
(72) WEINER, Heiko, 3184 N. Gil Haven Ct., Sanford, MI 48657, US;
MOLZAHN, David, 5501 Cortland St., Midland, MI 48642, US;
GULOTTY, Robert, J., Jr., 4212 Bluebird Drive, Midland, MI 48640, US
(74) Chung, Hsu Min, et al, Boult Wade Tennant, Verulam Gardens, 70 Gray's Inn Road, London WC1X 8BT, GB

(51) (8) **EP 2307351 ***
C 07C 215/10
C 07C 235/56
A 61K 31/195
A 61K 31/205
A 61P 19/00
(30) GB 10.06.2008. 0810615
(86) PCT/EP2009057007 08.06.2009.
(96) EP 09761681.7 08.06.2009. En
(87) WO2009150118 17.12.2009. 200951
(97) EP 2307351 13.04.2011. 201115 En
(54) NOVEL SALTS OF (4-{[(5-{[(3-CHLOROPHENYL)METHYL]OXY}-2-METHYLPHENYL)CARBONYL]AMINO}-3-METHYLPHENYL)ACETIC ACID
(71) Glaxo Group Limited, Glaxo Wellcome House, Berkeley Avenue, Greenford, Middlesex UB6 0NN, GB
(72) KEEL, Trevor Raymond, GlaxoSmithKline, Gunnels Wood Road, Stevenage, Hertfordshire SG1 2NY, GB;
VALLANCE, Sarah, GlaxoSmithKline, Gunnels Wood Road, Stevenage, Hertfordshire SG1 2NY, GB
(74) Cooke, Tracey, GlaxoSmithKline, Corporate Intellectual Property CN925.1, 980 Great West Road, Brentford, Middlesex TW8 9GS, GB

(51) (8) **EP 2297089 ***
C 07C 215/44
C 07C 217/52
C 07C 313/08
C 07C 213/02
C 07C 213/08
A 61K 31/135
A 61K 31/335
(30) EP 28.04.2008. 08155261
(86) PCT/EP2009055034 27.04.2009.
(96) EP 09738096.8 27.04.2009. En
(87) WO2009133052 05.11.2009. 200945
(97) EP 2297089 23.03.2011. 201112 En
(54) BENZOCYCLOHEPTANE AND BENZOXEPINE DERIVATIVES
(71) Janssen Pharmaceutica, N.V., Turnhoutseweg 30, 2340 Beerse, BE
(72) SCHOENTJES, Bruno, Janssen Pharmaceutica NV, Turnhoutseweg 30, B-2340 Beerse, BE;
PONCELET, Alain, Philippe, Janssen - Cilag, Campus de Maigremont, B.P. 615, F-27106 Val de Reuil Cedex, FR;
DOYON, Julien, Georges, Pierre-Olivier, Beekakkerstraat 68, B-2340 Beerse, BE;
LINDERS, Joannes, Theodorus, Maria, Janssen Pharmaceutica NV, Turnhoutseweg 30, B-2340 Beerse, BE;
MEERPOEL, Lieven, Janssen Pharmaceutica NV, Turnhoutseweg 30, B-2340 Beerse, BE;
VER DONCK, Luc, August, Laurentius, Janssen Pharmaceutica NV, Turnhoutseweg 30, B-2340 Beerse, BE
(74) Vervoort, Liesbeth, J&J Patent Law Department Beerse, Janssen Pharmaceutica N.V., Turnhoutseweg 30, 2340 Beerse, BE

(51) (8) **EP 2298730**
C 07C 227/40
C 07C 229/34
(30) JP 19.06.2008. 2008160314
(86) PCT/JP2008067595 22.09.2008.
(96) EP 08874706.8 22.09.2008. Ja
(87) WO2009153889 23.12.2009. 200952
(97) EP 2298730 23.03.2011. 201112 En
(54) METHOD OF PRODUCING PURIFIED OPTICALLY ACTIVE 4-AMINO-3-(SUBSTITUTED PHENYL)BUTANOIC ACID COMPOUND
(71) Sumitomo Chemical Company, Limited, 27-1, Shinkawa 2-chome, Chuo-ku, Tokyo 104-8260, JP
(72) MURAKAMI, Kazuo, 3-1-1-105 Nishimami, Kashiba-shi, Nara 639-0222, JP;
TAKEDA, Masahiro, 1-2-8-304, Koshienguchi, Nishinomiya, Hyogo, JP;
KATO, Hirofumi, 1-3-11-305, Mikuni, Toyonaka-shi, Osaka, JP
(74) Vossius & Partner, Siebertstrasse 4, 81675 München, DE

(51) (8) **EP 2318355 ***
C 07C 229/46
C 07C 233/58
C 07C 233/60
C 07C 255/47
C 07C 259/08
C 07C 261/04
C 07C 271/24
C 07C 62/06
C 07C 62/38
C 07C 69/00
C 07C 69/753
C 07D 217/04
A 61K 31/19
A 61P 3/04
A 61P 3/10
(30) EP 25.07.2008. 08161151
(86) PCT/EP2009059573 24.07.2009.
(96) EP 09781046.9 24.07.2009. En
(87) WO2010010174 28.01.2010. 201004
(97) EP 2318355 11.05.2011. 201119 En
(54) 1,1'-DIADAMANTYL CARBOXYLIC ACIDS, MEDICAMENTS CONTAINING SUCH COMPOUNDS AND THEIR USE
(71) Boehringer Ingelheim International GmbH, Binger Strasse 173, 55216 Ingelheim, DE
(72) ECKHARDT, Matthias, Boehringer Ingelheim GmbH, CD Patents, Binger Strasse 173, 55216 Ingelheim Am Rhein, DE;
HAMILTON, Bradford, S., Boehringer Ingelheim GmbH, CD Patents, Binger Strasse 173, 55216 Ingelheim Am Rhein, DE;
HIMMELSBACH, Frank, Boehringer Ingelheim GmbH, CD Patents, Binger Strasse 173, 55216 Ingelheim Am Rhein, DE
(74) Hammann, Heinz, et al, Boehringer Ingelheim GmbH, CD-Patents, Binger Straße 173, 55216 Ingelheim am Rhein, DE

(51) (8) **EP 2314567**
C 07C 233/76
C 07C 311/14
C 07D 213/81
C 07D 213/82
C 07D 333/38
C 07D 295/155
A 61P 19/02
A 61P 29/00
A 61P 11/06
A 61K 31/167
A 61K 31/381
A 61K 31/44
A 61K 31/445
(96) EP 09173872.4 23.10.2009. En
(97) EP 2314567 27.04.2011. 201117 En
(54) Inhibitors of the microsomal prostaglandin E2 synthase-1
(71) Boehringer Ingelheim International GmbH, Binger Strasse 173, 55216 Ingelheim am Rhein, DE
(72) The designation of the inventor has not yet been filed
(74) Hammann, Heinz, et al, Boehringer Ingelheim GmbH, CD-Patents, Binger Straße 173, 55216 Ingelheim am Rhein, DE

(51) (8) **EP 2310356 ***
C 07C 233/79
A 61K 31/4412
A 61K 31/444
A 61P 25/00
C 07C 233/00
C 07D 213/81
C 07D 215/48
C 07D 231/14
C 07D 241/44
C 07D 333/38
C 07D 401/12
C 07D 401/14
C 07D 403/12
C 07D 405/12
C 07D 405/14
(30) US 25.07.2008. 83563 P
US 17.03.2009. 160804 P
(86) PCT/US2009050934 17.07.2009.
(96) EP 09790560.8 17.07.2009. En
(87) WO2010011570 28.01.2010. 201004
(97) EP 2310356 20.04.2011. 201116 En
(54) ADAMANTYL DIAMIDE DERIVATIVES AND USES OF SAME
(71) H. Lundbeck A/S, Ottiliavej 9, 2500 Valby-Copenhagen, DK
(72) JIMENEZ, Hermogenes, N., 80 Nolton Street, Belleville, NJ 07109, US;
LI, Guiying, 76 Rutgers Place Apt. 1, River Edge, NJ 07661, US;
DOLLER, Dario, 15 Quarterhorse Crossing, Sparta, NJ 07871, US;
GRENON, Michel, 117 Rochelle Parkway, Saddle Brook, NJ 07663-4659, US;
WHITE, Andrew, D., 10608 West Splitstone, Pinckney, MI 48169, US;
GUO, Maojun, 1155 Guanglan Road, No. 29 Room 301, Pudong, Shanghai 201203, CN;
MA, Gil, 2306 Windsor Park CT, Englewood, NJ 07631, US

(74) Conrad, Lars Sparre, et al, H. Lundbeck A/S, Corporate Patents and Trademarks, Ottiliavej 9, 2500 Valby-Copenhagen, DK

(51) (8) **EP 2064176 ***
C 07C 233/88
C 07C 309/66
C 07F 7/18
(30) EP 04.09.2006. 06018455
(86) PCT/EP2007006148 06.07.2007.
(96) EP 07765168.5 06.07.2007. En
(87) WO2008028533 13.03.2008. 200811
(97) EP 2064176 03.06.2009. 200923 En
(54) PHENYLOXYANILINE DERIVATIVES
(71) Bayer Schering Pharma Aktiengesellschaft, Müllerstrasse 178, 13353 Berlin, DE
(72) LEHMANN, Lutz, Bornemannstrasse 6, 13357 Berlin, DE;
ROTHER, Axel, Choriner Strasse 64a, 10435 Berlin, DE

(51) (8) **EP 2303832 ***
C 07C 235/56
A 61K 31/16
(30) GB 10.06.2008. 0810617
(86) PCT/EP2009057008 08.06.2009.
(96) EP 09761682.5 08.06.2009. En
(87) WO2009150119 17.12.2009. 200951
(97) EP 2303832 06.04.2011. 201114 En
(54) NOVEL POLYMORPHIC FORMS OF (4-{[(5-{[(3-CHLOROPHENYL)METHYL]OXY}-2-METHYLPHENYL)CARBONYL]AMINO}-3-METHYLPHENYL)ACETIC ACID
(71) Glaxo Group Limited, Glaxo Wellcome House, Berkeley Avenue, Greenford, Middlesex UB6 0NN, GB
(72) VALLANCE, Sarah, GlaxoSmithKline, Gunnels Wood Road, Stevenage Hertfordshire SG1 2NY, GB
(74) Cooke, Tracey, GlaxoSmithKline, Corporate Intellectual Property CN925.1, 980 Great West Road, Brentford, Middlesex TW8 9GS, GB

(51) (8) **EP 2316821**
C 07C 253/30
C 07D 257/04
(96) EP 09174264.3 27.10.2009. En
(97) EP 2316821 04.05.2011. 201118 En
(54) Process for the manufacture of organic compounds
(71) Novartis AG, Lichtstrasse 35, 4056 Basel, CH
(72) The designation of the inventor has not yet been filed
(74) Roth, Peter Richard, Novartis Pharma AG, Patent Department, 4002 Basel, CH

(51) (8) **EP 2061753 ***
C 07C 253/34
C 07C 255/53
C 07D 307/87
(30) DK 11.09.2007. 200701314
(86) PCT/DK2008050222 10.09.2008.
(96) EP 08801398.2 10.09.2008. En
(87) WO2009033488 19.03.2009. 200912
(97) EP 2061753 27.05.2009. 200922 En
(54) METHOD FOR MANUFACTURE OF ESCITALOPRAM
(71) H. Lundbeck A/S, Ottiliavej 9, 2500 Valby-Copenhagen, DK
(72) DE FAVERI, Carla, Via dei Colli 28, I-31020 Farra di Soligo (TV), IT;
HUBER, Florian Anton Martin, Via Zardo 5, I-36050 Bolzano Vicentino (VI), IT;
DANCER, Robert James, Sønderkær 53, DK-2650 Hvidovre, DK
(74) Madsen, Jens Toftelund, et al, H. Lundbeck A/S, Ottiliavej 9, DK-2500 Valby, DK

(51) (8) **EP 2300419 ***
C 07C 279/24
B 01J 19/18
(30) US 19.05.2008. 71812 P
(86) PCT/US2009003072 18.05.2009.
(96) EP 09750946.7 18.05.2009. En
(87) WO2009142715 26.11.2009. 200948
(97) EP 2300419 30.03.2011. 201113 En
(54) METHOD AND APPARATUS FOR PREPARING A SOLUTION OF A SHEAR SENSITIVE MATERIAL
(71) Otsuka America Pharmaceutical, Inc., 2440 Research Boulevard, Rockville, MD 20850, US
(72) HATHAWAY, Royal D. Jr., 9009 Nesbit Court, Montgomery Village, MD 20886, US;
SCLAFANI, Joseph R., Jr., 427 Gilpin Road, Penn Valley, PA 19072, US
(74) Molnia, David, df-mp, Fünf Höfe, Theatinerstrasse 16, 80333 München, DE

(51) (8) **EP 2064177 ***
C 07C 311/00
(30) US 21.09.2006. 846084 P
(86) PCT/IB2007004453 20.09.2007.
(96) EP 07872067.9 20.09.2007. En
(87) WO2008078200 03.07.2008. 200827
(97) EP 2064177 03.06.2009. 200923 En
(54) PROTEASE INHIBITORS
(71) Ambrilia Biopharma Inc., 1000, chemin du Golf, Verdun, Quebec H3E 1H4, CA
(72) STRANIX, Brent Richard, 109 Maywood, Pointe-Claire, Quebec H9R 3L7, CA;
LAVALLEE, Jean-Francois, 28 Scraire, Mille-lles, Quebec, CA;
LEBERRE, Nicolas, 10 500 Saint-Denis, Montreal, Quebec H3L 2J3, CA;
PERRON, Valerie, 2090 Mayfield, Apt. 142, Laval, Quebec H7T 1K5, CA;
HERBART, Dominik, 298 rue Radisson, Apt. 4, Saint-Eustache, Québec J7D 4M9, CA;
MILOT, Guy, 1972 de L' Elan, Longueuil, Québec J4N 1N1, CA;
PANCHAL, Chandra J., 303 rue Baffin, Dollard-des-Ormeaux Québec H9A 3G4, CA
(74) Harris, Jennifer Lucy, et al, Kilburn & Strode LLP, 20 Red Lion Street, London WC1R 4PJ, GB

(51) (8) **EP 2305641**
C 07C 311/21
A 61K 31/341
A 61K 31/426
A 61K 31/427
A 61K 31/4402
A 61K 31/4406
A 61K 31/443
A 61K 31/4439
A 61K 31/497
A 61K 31/501
A 61K 31/506
A 61P 13/02
A 61P 13/08
A 61P 13/10
A 61P 43/00
C 07D 213/71
C 07D 277/20
C 07D 277/36
C 07D 277/56
C 07D 307/64
C 07D 405/12
(30) JP 23.06.2008. 2008163739
(86) PCT/JP2009061288 22.06.2009.
(96) EP 09770109.8 22.06.2009. Ja
(87) WO2009157399 30.12.2009. 200953
(97) EP 2305641 06.04.2011. 201114 En
(54) SULFONAMIDE COMPOUND OR SALT THEREOF
(71) Astellas Pharma Inc., 3-11, Nihonbashi-Honcho 2-chome, Chuo-ku, Tokyo 103-8411, JP
(72) KUBOTA, Hideki, c/o Astellas Pharma Inc., 3-11, Nihonbashi-Honcho 2-chome, Chuo-ku, Tokyo 103-8411, JP; TSUKAMOTO, Issei, c/o Astellas Pharma Inc., 3-11, Nihonbashi-Honcho 2-chome, Chuo-ku, Tokyo 103-8411, JP; KAMIJO, Kazunori, c/o Astellas Pharma Inc., 3-11, Nihonbashi-Honcho 2-chome, Chuo-ku, Tokyo 103-8411, JP; KATO, Koji, c/o Astellas Pharma Inc., 3-11, Nihonbashi-Honcho 2-chome, Chuo-ku, Tokyo 103-8411, JP; FUKUDA, Yuta, c/o Astellas Pharma Inc., 3-11, Nihonbashi-Honcho 2-chome, Chuo-ku, Tokyo 103-8411, JP; AZAMI, Hidenori, c/o Astellas Pharma Inc., 3-11, Nihonbashi-Honcho 2-chome, Chuo-ku, Tokyo 103-8411, JP
(74) Gille Hrabal Struck Neidlein Prop Roos, Patentanwälte, Brucknerstrasse 20, 40593 Düsseldorf, DE

(51) (8) **EP 2310359 ***
C 07C 311/48
C 07D 231/12
C 07D 213/36
C 07D 243/08
C 07D 261/08
C 07D 307/14
C 07D 307/52
C 07D 333/36
C 07D 413/12
A 61K 31/18
A 61P 29/00
(30) EP 04.08.2008. 08161765
US 19.03.2009. 161627 P
(86) PCT/EP2009060061 03.08.2009.
(96) EP 09804555.2 03.08.2009. En
(87) WO2010015613 11.02.2010. 201006
(97) EP 2310359 20.04.2011. 201116 En
(54) ORGANIC COMPOUNDS
(71) Novartis AG, Lichtstrasse 35, 4056 Basel, CH
(72) BAETTIG, Urs, Novartis Horsham Research Centre, Wimblehurst Road, Horsham West Sussex RH12 5AB, GB; D'SOUZA, Anne-Marie, Novartis Horsham Research Centre, Wimblehurst Road, Horsham West Sussex RH12 5AB, GB; HUNT, Peter, Novartis Horsham Research Centre, Wimblehurst Road, Horsham West Sussex RH12 5AB, GB; PRESS, Neil John, Novartis Horsham Research Centre, Wimblehurst Road, Horsham West Sussex RH12 5AB, GB; WATSON, Simon James, Novartis Horsham Research Centre, Wimblehurst Road, Horsham West Sussex RH12 5AB, GB
(74) Mueller, Philippe, et al, Novartis Pharma AG, Patent Department, 4002 Basel, CH

(51) (8) **EP 2321272 ***
C 07C 323/52
C 07D 211/60
A 61K 31/215
A 61K 31/4458
A 61P 31/04
(30) EP 02.09.2008. 08450126
(86) PCT/AT2009000313 17.08.2009.
(96) EP 09810900.2 17.08.2009. En
(87) WO2010025482 11.03.2010. 201010
(97) EP 2321272 18.05.2011. 201120 En
(54) ORGANIC COMPOUNDS
(71) Nabriva Therapeutics AG, Leberstrasse 20, 1112 Wien, AT
(72) MANG, Rosemarie, Reglergasse 3/204, A-1220 Wien, AT; HEILMAYER, Werner, Obere Weideäcker 19, A-7034 Zillingtal, AT
(74) Schwarz, Albin, Schwarz & Partner, Patentanwälte, Wipplingerstraße 30, A-1010 Wien, AT

(51) (8) **EP 2307362 ***
C 07C 323/57
C 07C 321/20
A 61K 31/167
A 61K 31/10
A 61P 11/00
A 61P 37/08
(30) US 03.07.2008. 78311 P
(86) PCT/US2009049621 02.07.2009.
(96) EP 09774569.9 02.07.2009. En
(87) WO2010003120 07.01.2010. 201001
(97) EP 2307362 13.04.2011. 201115 En
(54) ANTAGONISTS OF PROSTAGLANDIN D2 RECEPTORS
(71) Amira Pharmaceuticals, Inc., 9535 Waples Street, Suite 100, San Diego, CA 92121, US
(72) HUTCHINSON, John, Howard, 3435 Richmond Street, San Diego, CA 92103, US; SEIDERS, Thomas, Jon, 5257 Soledad Mountain Road, San Diego, CA 92109, US; WANG, Bowei, 10 Kirkview Circle, Westfield, NJ 07090, US; ARRUDA, Jeannie, M., 3611 Florida St. 4, San Diego, CA 92104, US; STEARNS, Brian, Andrew, 157 Beechtree Drive, Encinitas, CA 92024, US
(74) Sahans, Sarah Anne, et al, HLBBshaw, HLBBshaw Ltd, Merlin House, Falconry Court, Baker's Lane, Epping, Essex CM16 5DQ, GB

(51) (8) **EP 2297095 ***
C 07C 323/60
C 07C 323/65
(30) FR 13.05.2008. 0853092
(86) PCT/EP2009055787 13.05.2009.
(96) EP 09745768.3 13.05.2009. Fr
(87) WO2009138436 19.11.2009. 200947
(97) EP 2297095 23.03.2011. 201112 Fr
(54) NOVEL AMINO ACID DERIVATIVES, METHOD FOR PREPARING SAME, AND THERAPEUTIC USE THEREOF
(71) Pharmaleads, 11, Rue Watt, 75013 Paris, FR
(72) FOURNIE-ZALUSKI, Marie-Claude, 16 avenue de Bouvines, F-75011 Paris, FR;
PORAS, Hervé, 8 Chemin des Princes, F-78870 Bailly, FR;
ROQUES, Bernard, 38-40 rue Cabanis, F-75014 Paris, FR
(74) Warcoin, Jacques, et al, Cabinet Régimbeau, 20, rue de Chazelles, 75847 Paris Cedex 17, FR

(51) (8) **EP 2305642**
C 07C 327/56
A 61K 31/16
A 61P 35/00
(30) US 23.06.2004. 582596 P
US 16.05.2005. 681368 P
(96) EP 10009536.3 20.06.2005. En
(97) EP 2305642 06.04.2011. 201114 En
(54) Bis(thio-hydrazide amide) salts for treatment of cancers
(71) Synta Pharmaceuticals Corp., 45 Hartwell Avenue, Lexington, MA 02421, US
(72) Kostik, Elena, 32 School Street, Arlington, Massachusetts 02474, US;
Vaghefi, Farid, 14 Marshall Street, Watertown, Massachusetts 02472, US;
Liang, Guiqing, 26 Minuteman Drive, Concord, Massachusetts 01742, US;
Koya, Keizo, 234 Bonad Road, Chestnut Hill, Massachusetts 02467, US;
Sun, Lijun, 148 Depot Road, Harvard, Massachusetts 01451, US;
Tatsuta, Noriaki, 60 Fifer Lane, Lexinton, Massachusetts 02420, US;
Chen, Shoujun, 19 Dunster Road, Bedford, Massachusetts 01730, US;
Inoue, Takayo, 18 Winship Street, Malden, Massachusetts 02148, US;
Xia, Zhi-Qiang, 634 Massachusetts Avenue, Acton, Massachusetts 01720, US
(74) Snodin, Michael D., et al, Potter Clarkson LLP, Park View House, 58 The Ropewalk, Nottingham, NG1 5DD, GB

(51) (8) **EP 2300422 ***
C 07D 205/04
C 07D 401/12
C 07D 403/12
C 07D 401/06
A 61K 31/397
A 61K 31/496
A 61P 25/00
C 07D 403/14
C 07D 471/04
C 07D 487/04
A 61P 1/00
A 61P 9/00
A 61P 11/00
(30) EP 08.05.2008. 08155915
US 19.12.2008. 139461 P
(86) PCT/EP2009055418 05.05.2009.
(96) EP 09742060.8 05.05.2009. En
(87) WO2009135842 12.11.2009. 200946
(97) EP 2300422 30.03.2011. 201113 En
(54) AZETIDINES AND CYCLOBUTANES AS HISTAMINE H3 RECEPTOR ANTAGONISTS
(71) Evotec AG, Schnackenburgallee 114, 22525 Hamburg, DE
(72) DAVENPORT, Adam James, Penny Red Farington Road, Southmoor, Abington, Oxfordshire,OX13 5AA, GB;
HALLETT, David James, 4 White Lodge Close, Marlow Buckinghamshire SL7 3QY, GB;
CORSI, Massimo, Via Cadore 16, I-50142 Florence, IT
(74) Büchel, Edwin, Isenbruck Bösl Hörschler LLP, Patentanwälte, Eastsite One, Seckenheimer Landstraße 4, 68163 Mannheim, DE

(51) (8) **EP 2125715 ***
C 07D 205/08
A 61K 31/397
A 61P 3/00
(30) EP 24.01.2007. 07001537
EP 01.08.2007. 07015107
EP 12.10.2007. 07020070
EP 06.12.2007. 07023686
EP 17.12.2007. 07024430
(86) PCT/EP2008000546 24.01.2008.
(96) EP 08707257.5 24.01.2008. En
(87) WO2008089984 31.07.2008. 200831
(97) EP 2125715 02.12.2009. 200949 En
(54) PROCESS FOR THE PREPARATION OF EZETIMIBE AND DERIVATIVES THEREOF
(71) KRKA, D.d., Novo mesto, Smarjeska cesta 6, 8501 Novo mesto, SI
(72) STIMAC, Anton, Ulica Bratov, Ucakar 12, 1000 Ljubljana, SI;
MOHAR, Barbara, Kadunceva 1b, 1290 Grosuplje, SI;
STEPHAN, Michel, 21, rue de Danton, F-92170 Vanves, FR;
BEVC, Mojca, Glavna Cesta 54, 8233 Mirna, SI;
ZUPET, Rok, Janeza Rozica 6, 1000 Ljubljana, SI;
GARTNER, Andrej, Scopolijeva 51, 1000 Ljubljana, SI;
KROSELJ, Vesna, Staro Sejmisce 47, 8310 Sentjernej, SI;
SMRKOLJ, Matej, Cesta OF 42, 1420 Trbovlje, SI;
KIDEMET, Davor, Krizaniceva 55, 42000 Varazdin, HR;
SEDMAK, Gregor, Palmejeva 30, 1000 Ljubljana, SI;
BENKIC, Primo, Masera-Spasiceva 7, 1000 Ljubljana, SI;
KLJAJIC, Alen, Smrekarjeva ulica 4, 3000 Celje, SI;

PLEVNIK, Miha, Ulica Cankarjeve Brigade 16, 1295 Ivancna Gorica, SI
(74) Becker Kurig Straus, Patentanwälte, Bavariastrasse 7, 80336 München, DE

(51) (8) **EP 2313370 ***
C 07D 207/08
C 07D 207/48
C 07D 211/32
C 07D 211/94
C 07D 211/96
C 07D 307/12
C 07D 309/04
C 07D 307/26
C 07D 309/12
C 07D 335/02
C 07D 401/06
C 07D 405/06
C 07D 409/06
C 07D 413/06
C 07D 491/18
(30) GB 03.07.2008. 0812310
(86) PCT/EP2009058250 01.07.2009.
(96) EP 09772473.6 01.07.2009. En
(87) WO2010000773 07.01.2010. 201001
(97) EP 2313370 27.04.2011. 201117 En
(54) 5-HETEROCYCLYLALKYL-3-HYDROXY-2-PHENYLCYCLOPENT-2-ENONES AS HERBICIDES
(71) Syngenta Limited, European Regional Centre, Priestley Road, Surrey Research Park, Guildford, Surrey GU2 7YH, GB
(72) JEANMART, Stephane, André, Marie, c/o Syngenta Limited, Jealotts Hill, International Research Center, Bracknell Berkshire RG42 6EY, GB;
VINER, Russell, c/o Syngenta Limited, Jealotts Hill, International Research Center, Bracknell Berkshire RG42 6EY, GB;
TAYLOR, John, Benjamin, c/o Syngenta Limited, Jealotts Hill, International Research Center, Bracknell Berkshire RG42 6EY, GB;
WHITTINGHAM, William, Guy, c/o Syngenta Limited, Jealotts Hill, International Research Center, Bracknell Berkshire RG42 6EY, GB;
WAILES, Jeffrey, Steven, c/o Syngenta Limited, Jealotts Hill, International Research Center, Bracknell Berkshire RG42 6EY, GB;
TARGETT, Sarah, c/o Syngenta Limited, Jealotts Hill, International Research Center, Bracknell Berkshire RG42 6EY, GB;
MATHEWS, Christopher, John, c/o SYNGENTA LIMITED, Jeallotts Hill, International Research Center, Bracknell Berkshire RG42 6EY, GB;
GOVENKAR, Mangala, c/o Syngenta Biosciences Pvt Limited, Santa Monica Works Corlim, Ilhas 403110, Goa, IN;
CORDINGLEY, Matthew, Robert, c/o Syngenta Limited, Jeallotts Hill, International Research Center, Bracknell Berkshire RG42 6EY, GB;
RUSSELL, Claire, Janet, c/o Syngenta Limited, Jeallotts Hill, International Research Center, Bracknell Berkshire RG42 6EY, GB;
TYTE, Melloney, c/o Syngenta Limited, Jeallotts Hill, International Research Center, Bracknell Berkshire RG42 6EY, GB
(74) Breen, Anthony Paul, et al, Syngenta Limited, Intellectual Property Department, PO Box 3538, Jealott's Hill International Research Centre, Bracknell, Berkshire RG42 6YA, GB

(51) (8) **EP 2318363 ***
C 07D 207/08
C 07D 207/16
C 07D 401/14
C 07D 407/14
C 07D 471/10
A 61K 31/4025
A 61K 31/438
A 61K 31/4439
A 61K 31/454
A 61P 35/00
(30) DK 16.06.2008. 200800836
US 16.06.2008. 61789 P
(86) PCT/DK2009050129 16.06.2009.
(96) EP 09765460.2 16.06.2009. En
(87) WO2009152824 23.12.2009. 200952
(97) EP 2318363 11.05.2011. 201119 En
(54) HETEROCYCLIC DERIVATIVES AS IAP BINDING COMPOUNDS
(71) Nuevolution A/S, Rønnegade 8, 5th floor, 2100 Copenhagen, DK
(72) Dybro Lundorf, Mikkel, Nordvej 16B, DK-4000 Roskilde, DK;
Birkebæk Jensen, Kim, Voldumvej 30C, DK-2610 Rødovre, DK;
Schrøder Glad, Sanne, Viggo Barfoeds Alle 59, DK-2750 Ballerup, DK;
Haahr Gouliaev, Alex, Brøndsted 223, DK-3670 Veksø Sjælland, DK;
Holtmann, Anette, Lynge Bygade 12D, DK-3540 Lynge, DK;
Godskesen, Michael, Anders, Plantagekrogen 8, DK-2950 Vedbæk, DK
(74) Aamand, Jesper L., et al, Hjerrild & Levin ApS, Tuborg Boulevard 12, 2900 Hellerup, DK

(51) (8) **EP 2134680 ***
C 07D 207/14
A 61K 31/40
A 61K 31/4025
A 61K 31/4439
A 61K 31/5377
A 61P 35/00
C 07D 401/04
C 07D 401/12
C 07D 405/12
C 07D 413/12
(30) US 13.03.2007. 906733 P
US 06.03.2008. 43450
(86) PCT/CA2008000455 12.03.2008.
(96) EP 08733559.2 12.03.2008. En
(87) WO2008109994 18.09.2008. 200838
(97) EP 2134680 23.12.2009. 200952 En
(54) INHIBITORS OF HISTONE DEACETYLASE
(71) MethylGene Inc., 7220, rue Frederick-Banting, Montreal, QC H4S 2A1, CA
(72) FRECHETTE, Sylvie, 3693 Rue Ethel, Verdun, Quebec H4G 1S2, CA;
ISAKOVIC, Lubo, 1850 Lincoln Avenue, Apt. 602, Montreal, Quebec H3H 1H4, CA;

PAQUIN, Isabelle, 2250 Keller, Saint-Laurent, Quebec H4K 2P8, CA;
ROY, Simon, 73 B 1re Avenue Nord, Roxboro, Quebec H8Y 2K8, CA;
MORADEI, Oscar, 27 Rolland-Laniel, Kirkland, Quebec H9J 4A5, CA;
VAISBURG, Arkadii, 10 Riverwood Grove, Kirkland, Quebec H9J 2X2, CA
(74) Mallalieu, Catherine Louise, et al, D Young & Co LLP, 120 Holborn, London EC1N 2DY, GB

(51) (8) **EP 2315747 ***
C 07D 207/456
C 07C 327/20
C 07C 327/32
C 07H 3/06
C 08B 37/00
C 07K 14/31
(30) US 21.07.2008. 135493 P
US 20.02.2009. 208155 P
(86) PCT/US2009004206 21.07.2009.
(96) EP 09800657.0 21.07.2009. En
(87) WO2010011284 28.01.2010. 201004
(97) EP 2315747 04.05.2011. 201118 En
(54) METHODS AND COMPOSITIONS RELATING TO SYNTHETIC BETA-1,6 GLUCOSAMINE OLIGOSACCHARIDES
(71) The Brigham and Women's Hospital, Inc., 75 Francis Street, Boston, MA 02115, US
(72) PIER, Gerald, B., 21 Thorndike Street, Brookline, MA 02446, US;
NIFANTIEV, Nikolay, Litovsky Bulvar 13/12-481, Moscow 117593, RU;
TSVETKOV, Yury, Novatorov Str. 34/4-208, Moscow 119421, RU;
GENING, Marina, 3-Tverskaya-Yamskaya Str. 12-31, Moscow 125047, RU
(74) Korn, Richard Mervyn, et al, Potter Clarkson LLP, Park View House, 58 The Ropewalk, Nottingham, NG1 5DD, GB

(51) (8) **EP 2315748 ***
C 07D 209/08
C 07C 271/24
C 07D 203/14
(30) US 12.08.2008. 88156 P
(86) PCT/EP2009060351 10.08.2009.
(96) EP 09781678.9 10.08.2009. En
(87) WO2010018154 18.02.2010. 201007
(97) EP 2315748 04.05.2011. 201118 En
(54) PROCESSES FOR THE PREPARATION OF 4-OXO-OCTAHYDRO-INDOLE-1-CARBOCYLIC ACID METHYL ESTER AND DERIVATIVES THEREOF
(71) Novartis AG, Lichtstrasse 35, 4056 Basel, CH
(72) KUESTERS, Ernst, Gallenweiler Weg 1, 79427 Eschbach, DE;
ACEMOGLU, Murat, Grellingerstrasse 53, CH-4052 Basel, CH;
LUSTENBERGER, Philipp, Novartis Pharma AG, Postfach, CH-4002 Basel, CH;
SEDELMEIER, Gottfried, Erlenweg 11, 79227 Schallstadt, DE;
SCHMIDT, Beat, Maiengasse 27, CH-4123 Allschwil, CH;
PENN, Gerhard, Im Lohgraben 28, CH-4104 Oberwil, CH
(74) Jeffries, Charles Edward, et al, Novartis Pharma AG, Patent Department, 4002 Basel, CH

(51) (8) **EP 2300423 ***
C 07D 209/10
C 07D 209/12
C 07D 209/18
C 07D 405/06
C 07D 409/06
A 61K 31/404
A 61P 9/00
(30) DE 25.06.2008. 102008030207
(86) PCT/EP2009004305 16.06.2009.
(96) EP 09768921.0 16.06.2009. De
(87) WO2009156072 30.12.2009. 200953
(97) EP 2300423 30.03.2011. 201113 De
(54) SUBSTITUTED 7-SULFANYLMETHYL, 7-SULFINYLMETHYL AND 7-SULFONYLMETHYL INDOLES AND USE THEREOF
(71) Bayer Schering Pharma Aktiengesellschaft, Müllerstrasse 178, 13353 Berlin, DE
(72) KOLKHOF, Peter, Falkenberg 121, 42113 Wuppertal, DE;
BRÜNS, Astrid, Oberer Stiller Winkel 21, 42113 Wuppertal, DE;
THEDE, Kai, Jablonskistr. 26, 10405 Berlin, DE;
SCHLEMMER, Karl-Heinz, Wildsteig 22, 42113 Wuppertal, DE;
HILLISCH, Alexander, Stöckerberg 3-5, 42651 Solingen, DE;
LANG, Dieter, Wimmersberger Str. 60, 42553 Velbert, DE;
GERISCH, Michael, Schlieffenstr. 88, 42329 Wuppertal, DE;
GÖLLER, Andreas, Falkenberg 42, 42113 Wuppertal, DE;
GROSSER, Rolf, Gellertstr. 9, 51373 Leverkusen, DE;
SCHMECK, Carsten, Carl-Friedrich-Goerdeler-Str. 24, 45472 Mülheim, DE;
WOLTERING, Elisabeth, Narzissenweg 1 B, 40723 Hilden, DE;
PRIEN, Olaf, Lützenstr. 12, 10711 Berlin, DE;
PAULSEN, Holger, Dietrich-Bonhoeffer-Str. 19, 40724 Hilden, DE;
KERN, Armin, Am Brucher Häuschen 105, 42109 Wuppertal, DE

(51) (8) **EP 2307363 ***
C 07D 209/14
C 07D 403/12
A 61K 31/33
A 61P 19/00
(30) US 23.06.2008. 74837 P
(86) PCT/US2009047895 19.06.2009.
(96) EP 09789853.0 19.06.2009. En
(87) WO2010008761 21.01.2010. 201003
(97) EP 2307363 13.04.2011. 201115 En
(54) PIPERIDYL ACRYLAMIDE ANTOGONISTS OF CCR2
(71) Janssen Pharmaceutica, N.V., Turnhoutseweg 30, 2340 Beerse, BE
(72) CAI, Chaozhong, 129 Banbury Avenue, North Wales, PA 19454, US;
SUI, Zhihua, 665 Stockton Drive, Exton, PA 19341, US
(74) Warner, James Alexander, et al, Carpmaels & Ransford, One Southampton Row, GB-London WC1B 5HA, GB

(51) (8) **EP 2061758** *
C 07D 209/34
A 61K 31/404
(30) US 11.09.2006. 843634 P
US 20.03.2007. 895880 P
(86) PCT/US2007077964 10.09.2007.
(96) EP 07814771.7 10.09.2007. En
(87) WO2008033743 20.03.2008. 200812
(97) EP 2061758 27.05.2009. 200922 En
(54) SUBSTITUTED 2-INDOLINONE AS PTK INHIBITORS CONTAINING A ZINC BINDING MOIETY
(71) Curis, Inc., 4 Maguire Road, Lexington, MA 02421, US
(72) CAI, Xiong, 26 Concord Ave., Belmont, MA 02478, US;
QIAN, Changgeng, 163 Old Connecticut Path, Wayland, MA 01778, US;
GOULD, Stephen, 265 Highland Avenue, San Carlos, CA 94070, US
(74) Stevens, Ian Edward, et al, Potter Clarkson LLP, Park View House, 58 The Ropewalk, Nottingham, NG1 5DD, GB

(51) (8) **EP 2265582** *
C 07D 209/34
C 07D 401/06
C 07D 403/06
A 61K 31/404
(30) FR 19.02.2008. 0800866
(86) PCT/FR2009000179 18.02.2009.
(96) EP 09721627.9 18.02.2009. Fr
(87) WO2009115685 24.09.2009. 200939
(97) EP 2265582 29.12.2010. 201052 Fr
(54) NOVEL 3-AMINOALKYL-1,3-DIHYDRO-2H-INDOL-2-ONE DERIVATIVES, PREPARATION THEREOF AND THERAPEUTIC USE THEREOF.
(71) Sanofi-Aventis, 174 Avenue de France, 75013 Paris, FR
(72) FOULON, Loïc, c/o Sanofi-aventis, Département Brevets, 174 avenue de France, F-75013 Paris, FR;
GOULLIEUX, Laurent, c/o Sanofi-aventis, Département Brevets, 174 avenue de France, F-75013 Paris, FR;
POUZET, Brigitte, c/o Sanofi-aventis, Département Brevets, 174 avenue de France, F-75013 Paris, FR;
SERRADEIL-LE GAL, Claudine, c/o Sanofi-aventis, Département Brevets, 174 avenue de France, F-75013 Paris, FR;
VALETTE, Gérard, c/o Sanofi-aventis, Département Brevets, 174 avenue de France, F-75013 Paris, FR
(74) Werner, Alain Henri, et al, Sanofi-Aventis, Département Brevets, 174, avenue de France, 75013 Paris, FR

(51) (8) **EP 2307364** *
C 07D 209/44
A 61K 31/4035
A 61P 35/00
A 61P 29/00
(30) US 01.07.2008. 77432 P
(86) PCT/US2009049449 01.07.2009.
(96) EP 09774472.6 01.07.2009. En
(87) WO2010003022 07.01.2010. 201001
(97) EP 2307364 13.04.2011. 201115 En
(54) ISOINDOLONE DERIVATIVES AS MEK KINASE INHIBITORS AND METHODS OF USE
(71) Genentech, Inc., 1 DNA Way, South San Francisco, CA 94080, US
(72) GANCIA, Emanuela, c/o Argenta Discovery Limited, 8/9 Spire Green Center, Flex Meadow, Harlow CM195TR, GB;
HEALD, Robert, Andrew, c/o Argenta Discovery Limited, 8/9 Spire Green Center, Flex Meadow, Harlow, Essex CM195TR, GB;
JACKSON, Philip, c/o Argenta Discovery Limited, 8/9 Spire Green Center, Flex Meadow, Harlow, Essex CM195TR, GB;
PRICE, Stephen, c/o Argenta Discovery Limited, 8/9 Spire Green Center, Flex Meadow, Harlow, Essex CM195TR, GB
(74) Kiddle, Simon John, et al, Mewburn Ellis LLP, 33 Gutter Lane, London, EC2V 8AS, GB

(51) (8) **EP 2133333**
C 07D 209/52
A 61K 31/403
A 61P 25/00
A 61P 3/04
(30) FR 13.06.2008. 0803297
(96) EP 09290432.5 11.06.2009. Fr
(97) EP 2133333 16.12.2009. 200951 Fr
(54) New azabicyclic derivatives, method of preparing same and pharmaceutical compositions containing them
(71) Les Laboratoires Servier, 35, rue de Verdun, 92284 Suresnes Cedex, FR
(72) Casara, Patrick, 740, Chemin Pré Seigneur, 78670 Villennes sur Seine, FR;
Chollet, Anne-Marie, 27, avenue d'Aligre, 78230 Le Pecq, FR;
Dhainaut, Alain, 7, rue des Guipires, 78400 Chatou, FR;
Lestage, Pierre, 9, allée de la Grande Terre, 78170 La Celle Saint Cloud, FR;
Panayi, Fany, 45, rue des Abbesses, 75018 Paris, FR;
Roger, Anita, 10, avenue du Ch?teau, 78620 L'Etang-la-Ville, FR

(51) (8) **EP 2300425** *
C 07D 209/88
C 07D 209/82
A 61K 31/403
A 61P 9/06
(30) US 24.06.2008. 75242
(86) PCT/US2009048327 23.06.2009.
(96) EP 09798503.0 23.06.2009. En
(87) WO2010008864 21.01.2010. 201003
(97) EP 2300425 30.03.2011. 201113 En
(54) CYCLOALKANE[B]INDOLE ANGTAGONISTS OF PROSTAGLANDIN D2 RECEPTORS
(71) Amira Pharmaceuticals, Inc., 9535 Waples Street, Suite 100, San Diego, CA 92121, US;
Hutchinson, John Howard, 5948 Via Zurita, La Jolla, California 92037, US;
Stearns, Brian Andrew, 3339 32nd Street, San Diego, California 92104, US;
Truong, Yen Pham, 9175 Judicial Drive, 6407, San Diego, California 92122, US
(72) HUTCHINSON, John Howard, 3435 Richmond Street, San Diego, California 92103, US;
STEARNS, Brian Andrew, 157 Beechtree Drive, Encinitas, California 92024, US;
TRUONG, Yen Pham, 12939 Calle de las Rosas, San Diego, California 92129, US
(74) Sahans, Sarah Anne, et al, HLBBshaw, Merlin House, Falconry Court, Baker's Lane, Epping, Essex CM16 5DQ, GB

(51) (8) **EP 2307367 ***
C 07D 211/34
C 07D 211/90
A 61K 31/4402
A 61P 35/00
(30) US 08.07.2008. 79002 P
(86) PCT/US2009048782 26.06.2009.
(96) EP 09794969.7 26.06.2009. En
(87) WO2010005807 14.01.2010. 201002
(97) EP 2307367 13.04.2011. 201115 En
(54) NOVEL INHIBITORS OF PROLIFERATION AND ACTIVATION OF SIGNAL TRANSDUCER AND ACTIVATOR OF TRANSCRIPTION (STATS)
(71) Board of Regents, The University of Texas System, 201 West 7th Street, Austin, TX 78701, US
(72) PRIEBE, Waldemar, 4239 Emory Avenue, Houston, TX 77005, US;
SKORA, Stanislaw, 1800 El Paseo 613, Houston, TX 77054, US;
MADDEN, Timothy, 1811 Birnam Glen DR., Sugar Land, TX 77479, US;
FOKT, Izabela, 7500 Kirby Drive, 1128, Houston, TX 77030, US;
CONRAD, Charles, 15911 Harwick Drive, Spring, TX 77379, US
(74) Adam, Holger, Kraus & Weisert, Patent- und Rechtsanwälte, Thomas-Wimmer-Ring 15, 80539 München, DE

(51) (8) **EP 2300426 ***
C 07D 211/38
C 07D 211/46
C 07D 213/75
C 07D 295/192
C 07D 295/096
A 61K 31/397
A 61K 31/40
A 61K 31/435
A 61K 31/445
A 61K 31/4453
A 61K 31/495
A 61K 31/496
A 61K 31/5355
A 61K 31/5375
A 61K 31/5377
(30) EP 06.06.2008. 08104281
(86) PCT/EP2009056758 02.06.2009.
(96) EP 09757530.2 02.06.2009. En
(87) WO2009147149 10.12.2009. 200950
(97) EP 2300426 30.03.2011. 201113 En
(54) COMPOUNDS COMPRISING A CYCLOBUTOXY GROUP
(71) UCB Pharma, S.A., 60, allée de la Recherche, 1070 Brussels, BE
(72) CELANIRE, Sylvain, 116, Clos les Lauriers, F-74930 Reignier, FR;
PROVINS, Laurent, c/o UCB PHARMA S.A., 60 Allée de la Recherche, B-1070 Brussels, BE;
DENONNE, Frédéric, 27c rue des Sables, B-1000 Brussels, BE;
VALADE, Anne, c/o UCB PHARMA S.A., 60 Allée de la Recherche, B-1070 Brussels, BE
(74) UCB, Intellectual Property, c/o UCB Pharma S.A., Intellectual Property Department, Allée de la Recherche 60, 1070 Brussels, BE

(51) (8) **EP 2303842 ***
C 07D 211/90
A 61K 31/4422
A 61P 9/00
(30) EP 02.07.2008. 08159540
(86) PCT/EP2009056439 27.05.2009.
(96) EP 09772245.8 27.05.2009. En
(87) WO2010000545 07.01.2010. 201001
(97) EP 2303842 06.04.2011. 201114 En
(54) A PROCESS FOR PRODUCING LERCANIDIPINE HC1 FORM V
(71) Recordati Ireland Limited, Raheens East, Ringaskiddy, County Cork, IE
(72) LEONARDI, Amedeo, Via Poliziano 16, I-20154 Milano, IT;
MOTTA, Gianni, Corso Marconi. 32/1, I-20030 Barlassina (MI), IT;
JACQUET, Luc, Via Brianza 19, I-21047 Saronno (VA), IT
(74) Pistolesi, Roberto, et al, Dragotti & Associati Srl, Via Marina 6, 20121 Milano, IT

(51) (8) **EP 2310366 ***
C 07D 213/02
C 07D 249/12
C 07D 471/04
A 61K 31/437
A 61P 37/08
A 61P 35/00
A 61P 25/00
A 61P 21/00
A 61P 27/00
A 61P 19/02
A 61P 11/06
A 61P 7/02
A 61P 3/00
A 61K 31/5377
C 07D 277/82
C 07D 213/61
C 07D 213/26
A 61K 31/496
A 61K 31/428
A 61P 17/06
(30) FR 18.07.2008. 0804084
FR 21.01.2009. 0900245
(86) PCT/FR2009051406 16.07.2009.
(96) EP 09736253.7 16.07.2009. Fr
(87) WO2010007316 21.01.2010. 201003
(97) EP 2310366 20.04.2011. 201116 Fr
(54) NOVEL TRIAZOLO(4,3-A)PYRIDINE DERIVATIVES, PROCESS FOR THE PREPARATION THEREOF, USE THEREOF AS MEDICAMENTS, PHARMACEUTICAL COMPOSITIONS AND NOVEL USE, IN PARTICULAR AS MET INHIBITORS
(71) Sanofi-Aventis, 174 Avenue de France, 75013 Paris, FR
(72) BACQUE, Eric, c/o sanofi-aventis, Département Brevets, 174 avenue de France, F-75013 Paris, FR;
DAMOUR, Dominique, c/o sanofi-aventis, Département Brevets, 174 avenue de France, F-75013 Paris, FR;

NEMECEK, Conception, c/o sanofi-aventis, Département Brevets, 174 avenue de France, F-75013 Paris, FR;
NEMECEK, Patrick, c/o sanofi-aventis, Département Brevets, 174 avenue de France, F-75013 Paris, FR;
WENTZLER, Sylvie, c/o sanofi-aventis, Département Brevets, 174 avenue de France, Paris 75013, FR
(74) Le Coupanec, Pascale A.M.P., Nony & Associés, 3, rue de Penthivre, 75008 Paris, FR

(51) (8) **EP 2321278 ***
C 07D 213/24
C 07D 401/04
C 07D 407/04
C 07D 409/04
A 61K 31/216
A 61P 25/28
(30) US 22.07.2008. 82586 P
US 05.06.2009. 478820
(86) PCT/US2009051211 21.07.2009.
(96) EP 09790657.2 21.07.2009. En
(87) WO2010011626 28.01.2010. 201004
(97) EP 2321278 18.05.2011. 201120 En
(54) PYRIDINYL MODULATORS OF y-SECRETASE
(71) Janssen Pharmaceutica, N.V., Turnhoutseweg 30, 2340 Beerse, BE
(72) LU, Tianbao, 42 Livery Drive, Churchville, PA 18966, US
(74) Warner, James Alexander, Carpmaels & Ransford, One Southampton Row, London, WC1B 5HA, GB

(51) (8) **EP 2059508 ***
C 07D 213/60
C 07D 241/10
C 07D 401/04
A 61K 31/435
A 61P 9/00
(30) FR 11.08.2006. 0607283
(86) PCT/FR2007001357 09.08.2007.
(96) EP 07823409.3 09.08.2007. Fr
(87) WO2008020124 21.02.2008. 200808
(97) EP 2059508 20.05.2009. 200921 Fr
(54) 5,6-BISARYL-2-PYRIDINE-CARBOXAMIDE DERIVATIVES, PREPARATION AND APPLICATION THEREOF IN THERAPEUTICS AS UROTENSIN II RECEPTOR ANTAGONISTS
(71) Sanofi-Aventis, 174 Avenue de France, 75013 Paris, FR
(72) ALTENBURGER, Jean-Michel, Sanofi-Aventis, Département Brevets, 174, avenue de France, 75013 Paris, FR;
FOSSEY, Valerie, Sanofi-Aventis, Département Brevets, 174, avenue de France, 75013 Paris, FR;
LASSALLE, Gilbert, Sanofi-Aventis, Département Brevets, 174, avenue de France, 75013 Paris, FR;
PETIT, Frédéric, Sanofi-Aventis, Département Brevets, 174, avenue de France, 75013 Paris, FR;
VERNIERES, Jean-Claude, Sanofi-Aventis, Département Brevets, 174, avenue de France, 75013 Paris, FR;
JANIAK, Philip, Sanofi-Aventis, Département Brevets, 174, avenue de France, 75013 Paris, FR
(74) Bouron, Estelle, et al, Sanofi-Aventis, Département Brevets, 174, avenue de France, 75013 Paris, FR

(51) (8) **WO 2009153496**
C 07D 213/64
C 07D 213/70
C 07D 213/74
C 07D 407/04
C 07D 213/643
A 61K 31/44
A 61K 31/443
A 61K 31/444
A 61P 3/10
A 61P 3/06
(30) FR 26.05.2008. 0853415
(86) PCT/FR2009050980 26.05.2009.
(96) WO 09766058.3 26.05.2009. Fr
(87) WO2009153496 23.12.2009. 200952
(97) WO 2009153496 23.12.2009. 200952 Fr
(54) PPAR AGONIST COMPOUNDS AND PREPARATION AND USES THEREOF FOR TREATING DIABETES AND/OR DYSLIPIDEMIA
(71) Genfit, Parc Eurasanté Lille Métropole, 885, Avenue Eugne Avinée, 59120 Loos, FR
(72) MASSON, Christophe, 15 rue des comblais, F-28200 Chateaudun, FR;
CAUMONT-BERTRAND, Karine, 39 rue du Pont Rouge, F-59236 Frelinghien, FR
(74) Tezier Herman, Béatrice, et al, Cabinet Becker & Associés, 25, rue Louis Le Grand, 75002 Paris, FR

(51) (8) **EP 2310371 ***
C 07D 213/64
C 07D 213/70
C 07D 213/74
C 07D 407/04
C 07D 213/643
A 61K 31/44
A 61K 31/443
A 61K 31/444
A 61P 3/10
A 61P 3/06
(30) FR 26.05.2008. 0853415
(86) PCT/FR2009050980 26.05.2009.
(96) EP 09766058.3 26.05.2009. Fr
(87) WO2009153496 23.12.2009. 200952
(97) EP 2310371 20.04.2011. 201116 Fr
(54) PPAR AGONIST COMPOUNDS AND PREPARATION AND USES THEREOF FOR TREATING DIABETES AND/OR DYSLIPIDEMIA
(71) Genfit, Parc Eurasanté Lille Métropole, 885, Avenue Eugne Avinée, 59120 Loos, FR
(72) MASSON, Christophe, 15 rue des comblais, F-28200 Chateaudun, FR;
CAUMONT-BERTRAND, Karine, 39 rue du Pont Rouge, F-59236 Frelinghien, FR
(74) Tezier Herman, Béatrice, et al, Cabinet Becker & Associés, 25, rue Louis Le Grand, 75002 Paris, FR

(51) (8) **EP 2307373 ***
C 07D 213/70
C 07D 213/89
C 07C 46/10
C 07C 50/32
(86) PCT/IL2008000893 30.06.2008.
(96) EP 08763649.4 30.06.2008. En

(87) WO2010001379 07.01.2010. 201001
(97) EP 2307373 13.04.2011. 201115 En
(54) A PROCESS FOR PREPARING ATOVAQUONE AND ASSOCIATE INTERMEDIATES
(71) Chemagis Ltd., 29 Lehi Street, 51200 Bnei Brak, IL
(72) ZHU, Fuqiang, 1088 Chuansha Road, Pudong, Shanghai 201209, CN;
QIAO, He, 1088 Chuansha Road, Pudong, Shanghai 201209, CN;
BEKHAZI, Michel, 31 Compton Cresent, Pointe Claire, Québec H9R 5V6, CA
(74) Modiano, Micaela Nadia, et al, Modiano & Partners, Thierschstrasse 11, 80538 München, DE

(51) (8) **EP 2300428 ***
C 07D 213/73
C 07D 401/12
C 07D 401/14
C 07D 409/12
C 07D 409/14
C 07D 413/12
C 07D 417/12
A 61K 31/5377
A 61K 31/44
A 61K 31/4439
A 61K 31/4436
A 61K 31/444
A 61K 31/4725
A 61K 31/4709
A 61P 29/00
(30) GB 29.04.2008. 0807828
US 29.04.2008. 71431
(86) PCT/GB2009001062 28.04.2009.
(96) EP 09738378.0 28.04.2009. En
(87) WO2009133348 05.11.2009. 200945
(97) EP 2300428 30.03.2011. 201113 En
(54) AMINOPYRIDINE DERIVATIVES
(71) Vantia Limited, 1 Venture Road, Southampton Science Park, Chilworth, SO16 7NP, GB
(72) EVANS, David, Michael, Southampton Science Park, 1 Venture Road, Chilworth, Southampton SO16 7NP, GB;
ALLAN, Christine, Elizabeth, Southampton Science Park, 1 Venture Road, Chilworth, Southampton SO16 7NP, GB;
HORTON, John, Southampton Science Park, 1 Venture Road, Chilworth, Southampton SO16 7NP, GB;
ROOKER, David, Philip, Southampton Science Park, 1 Venture Road, Chilworth, Southampton SO16 7NP, GB
(74) Hallybone, Huw George, Carpmaels & Ransford, One Southampton Row, GB-London WC1B 5HA, GB

(51) (8) **EP 2307374 ***
C 07D 213/74
C 07D 213/84
A 61K 31/496
A 61P 25/00
(30) EP 31.07.2008. 08161576
(86) PCT/EP2009059788 29.07.2009.
(96) EP 09802514.1 29.07.2009. En
(87) WO2010012758 04.02.2010. 201005
(97) EP 2307374 13.04.2011. 201115 En
(54) PIPERAZIN-1-YL-TRIFLUOROMETHYL-SUBSTITUTED-PYRIDINES AS FAST DISSOCIATING DOPAMINE 2 RECEPTOR ANTAGONISTS
(71) Janssen Pharmaceutica, N.V., Turnhoutseweg 30, 2340 Beerse, BE
(72) BARTOLOMÉ-NEBREDA, José Manuel, Janssen-Cilag S.A., Calle Jarama 75, Poligono Industrial, E-45007 Toledo, ES;
MACDONALD, Gregor, James, Janssen Pharmaceutica NV, Turnhoutseweg 30, B-2340 Beerse, BE;
VAN GOOL, Michiel, Luc, Maria, Janssen Cilag S.A., Poligono Industrial, E-45007 Toledo, ES
(74) Quaghebeur, Luc, et al, Janssen Pharmaceutica N.V., Patent Department, Turnhoutseweg 30, 2340 Beerse, BE

(51) (8) **EP 2311807**
C 07D 213/74
C 07D 239/48
C 07D 239/95
C 07D 401/12
C 07D 401/14
C 07D 403/12
C 07D 403/14
C 07D 413/12
C 07D 417/12
C 07D 451/02
C 07D 453/02
C 07D 471/04
C 07D 473/16
C 07D 487/04
C 07D 487/08
A 61K 31/506
A 61P 25/00
A 61P 37/00
A 61P 31/00
(30) US 08.12.2006. 869299 P
(96) EP 10007914.4 20.11.2007. En
(97) EP 2311807 20.04.2011. 201116 En
(54) Compounds and composition as protein kinase inhibitors
(71) IRM LLC, 131 Front Street, PO Box HM 2899, Hamilton HM LX, BM
(72) Michellys, Pierre-Yves, 1416 Corte Bravo, San Marcos, CA 92069, US;
Pei, Wei, 8688 New Salem Street, Unit 184, San Diego, CA 92126, US;
Marsilje, Thomas H., 1844 Narragansett Court, San Diego, CA 92107, US;
Lu, Wenshuo, 3644 Berryfield Court, San Diego, CA 92130, US;
Chen, Bei, 11048 Creekbridge Place, San Diego, CA 92128, US;
Uno, Tetsuo, 4495 Shorepoint Way, San Diego, CA 92130, US;
Jin, Yunho, 13477 Tiverton Road, San Diego, CA 92130, US;
Jiang, Tao, 10721 Calle Mar de Mariposa, San Diego, CA 92130, US
(74) Kiddle, Simon John, et al, Mewburn Ellis LLP, 33 Gutter Lane, London, EC2V 8AS, GB

(51) (8) **EP 2119706**
C 07D 213/75
A 61K 31/4412
A 61K 31/4427
A 61K 31/496
A 61K 31/506
A 61K 31/5377
A 61P 35/00
C 07D 401/12
C 07D 401/14
C 07D 403/12
C 12N 15/09
C 12Q 1/68
G 01N 33/15
G 01N 33/48
G 01N 33/50
G 01N 33/53
G 01N 33/574
(30) JP 23.02.2007. 2007044424
(86) PCT/JP2008053066 22.02.2008.
(96) EP 08711837.8 22.02.2008. Ja
(87) WO2008102870 28.08.2008. 200835
(97) EP 2119706 18.11.2009. 200947 En
(54) PYRIDINE OR PYRIMIDINE DERIVATIVE HAVING EXCELLENT CELL GROWTH INHIBITION EFFECT AND EXCELLENT ANTI-TUMOR EFFECT ON CELL STRAIN HAVING AMPLIFICATION OF HGFR GENE
(71) Eisai R&D Management Co., Ltd., 6-10, Koishikawa 4-chome, Bunkyo-ku, Tokyo 112-8088, JP
(72) OBAISHI, Hiroshi, c/o EISAI CO. LTD., Tsukuba Research Laboratories, 1-3 Tokodai 5-chome, Tsukuba-shi, Ibaraki 300-2635, JP;
NAKAGAWA, Takayuki, c/o EISAI CO. LTD., Tsukuba Research Laboratories, 1-3 Tokodai 5-chome, Tsukuba-shi, Ibaraki 300-2635, JP;
MATSUSHIMA, Tomohiro, c/o EISAI CO. LTD., Tsukuba Research Laboratories, 1-3 Tokodai 5-chome, Tsukuba-shi, Ibaraki 300-2635, JP;
FUNASAKA, Setsuo, c/o EISAI CO. LTD., Tsukuba Research Laboratories, 1-3 Tokodai 5-chome, Tsukuba-shi, Ibaraki 300-2635, JP;
SHIROTORI, Shuji, c/o EISAI CO. LTD., Tsukuba Research Laboratories, 1-3 Tokodai 5-chome, Tsukuba-shi, Ibaraki 300-2635, JP;
TAKAHASHI, Keiko, c/o EISAI CO. LTD., Tsukuba Research Laboratories, 1-3 Tokodai 5-chome, Tsukuba-shi, Ibaraki 300-2635, JP
(74) HOFFMANN EITLE, Patent- und Rechtsanwälte, Arabellastraße 4, 81925 München, DE

(51) (8) **EP 2315751 ***
C 07D 213/82
C 07D 233/88
C 07D 407/08
C 07D 413/12
C 07D 417/12
C 07D 471/04
C 07D 471/10
C 07D 487/04
C 07D 487/06
C 07D 487/10
C 07D 487/16
C 07D 491/10
C 07D 495/10
A 61K 31/506
A 61K 31/404
(30) US 26.06.2008. 133249 P
(86) PCT/US2009003803 26.06.2009.
(96) EP 09770549.5 26.06.2009. En
(87) WO2009158011 30.12.2009. 200953
(97) EP 2315751 04.05.2011. 201118 En
(54) ALKYNYL ALCOHOLS AS KINASE INHIBITORS
(71) Amgen Inc., One Amgen Center Drive, Thousand Oaks, CA 91320, US
(72) CHEN, Guoqing, 17 Binnacle Lane, Foster City, CA 94404, US;
CUSHING, Timothy, D., 1064 Glacier Avenue, Pacifica, CA 94044, US;
FISHER, Benjamin, 1020 Yates Way, Apt. 313, San Mateo, CA 94403, US;
HE, Xiao, 725 Crane Avenue, Foster City, CA 94404, US;
LI, Kexue, 161 Montelana Court, Mountain View, CA 94040, US;
LI, Zhihong, 467 Anita Drive, Millbrae, CA 94030, US;
MCGEE, Lawrence, R., 39 Big Sur Way, Pacifica, CA 94044, US;
PATTAROPONG, Vatee, 1408 El Camino Real, Unit 1, Burlingame, CA 94010, US;
FAULDER, Paul, 30 Prestwick Close, Macclesfield, Chesire SK10 2TH, GB;
SEGANISH, Jennifer, L., 10 Happel Court, Scotch Plains, NJ 07076, US;
SHIN, Youngsook, 64 Loop 22, Emeryville, CA 94608, US;
WANG, Zhulun, 660 Glenbrook Drive, Palo Alto, CA 94306, US;
LIU, Wen, 343 Catamaran Street, Foster City, CA 94404, US
(74) Grünecker, Kinkeldey, Stockmair & Schwanhäusser, Anwaltssozietät, Leopoldstrasse 4, 80802 München, DE

(51) (8) **EP 2099759 ***
C 07D 215/14
C 07D 401/04
C 07D 413/04
C 07D 417/04
A 61K 31/496
A 61P 31/04
(30) EP 06.12.2006. 06125529
(86) PCT/EP2007063316 04.12.2007.
(96) EP 07847814.6 04.12.2007. En
(87) WO2008068270 12.06.2008. 200824
(97) EP 2099759 16.09.2009. 200938 En
(54) ANTIBACTERIAL QUINOLINE DERIVATIVES

(71) Janssen Pharmaceutica NV, Turnhoutseweg 30, 2340 Beerse, BE
(72) GUILLEMONT, Jérôme Emile Georges, Johnson & Johnson, Pharmaceutical Research and Development, A division of Janssen-Cilag, Campus de Maigremont BP615, 27106 Val de Reuil Cedex, FR;
ANDRIES, Koenraad Jozef Lodewijk Marcel, Janssen Pharmaceutica N.V., Turnhoutseweg 30, 2340 Beerse, BE;
KOUL, Anil, Janssen Pharmaceutica N.V., Turnhoutseweg 30, 2340 Beerse, BE
(74) Vervoort, Liesbeth, Janssen Pharmaceutica N.V., Turnhoutseweg 30, 2340 Beerse, BE

(51) (8) **EP 2311810**
C 07D 217/06
A 61K 31/4545
A 61K 31/4725
A 61K 31/55
A 61M 1/36
A 61P 7/04
C 07D 401/12
C 07D 401/14
(30) JP 11.07.2008. 2008181882
(86) PCT/JP2009062636 10.07.2009.
(96) EP 09794531.5 10.07.2009. Ja
(87) WO2010005087 14.01.2010. 201002
(97) EP 2311810 20.04.2011. 201116 En
(54) AMIDINE DERIVATIVE
(71) Ajinomoto Co., Inc., 15-1, Kyobashi 1-chome, Chuo-ku, Tokyo 104-8315, JP
(72) MATSUMOTO, Kayo, c/o AJINOMOTO CO. INC., 1-1 Suzuki-cho, Kawasaki-ku, Kawasaki-shi, Kanagawa 210-8681, JP;
SUGIKI, Masayuki, c/o AJINOMOTO CO. INC., 1-1 Suzuki-cho, Kawasaki-ku, Kawasaki-shi, Kanagawa 210-8681, JP;
TAKAYANAGI, Masaru, c/o AJINOMOTO CO. INC., 1-1 Suzuki-cho, Kawasaki-ku, Kawasaki-shi, Kanagawa 210-8681, JP;
NOGI, Yasuko, c/o AJINOMOTO CO. INC., 1-1 Suzuki-cho, Kawasaki-ku, Kawasaki-shi, Kanagawa 210-8681, JP;
TANIGUCHI, Shinya, c/o AJINOMOTO CO. INC., 1-1 Suzuki-cho, Kawasaki-ku, Kawasaki-shi, Kanagawa 210-8681, JP;
UENO, Satoko, c/o AJINOMOTO CO. INC., 1-1 Suzuki-cho, Kawasaki-ku, Kawasaki-shi, Kanagawa 210-8681, JP;
SHIRAI, Yoshiaki, c/o AJINOMOTO CO. INC., 1-1 Suzuki-cho, Kawasaki-ku, Kawasaki-shi, Kanagawa 210-8681, JP
(74) Nicholls, Kathryn Margaret, et al, Mewburn Ellis LLP, 33 Gutter Lane, London, EC2V 8AS, GB

(51) (8) **EP 2303845 ***
C 07D 217/24
C 07D 493/08
C 07D 495/08
A 61K 31/472
A 61P 27/00
A 61P 9/00
A 61P 25/00
A 61P 37/00
(30) EP 24.06.2008. 08290607
US 17.02.2009. 153155 P
(86) PCT/EP2009004393 18.06.2009.
(96) EP 09768941.8 18.06.2009. En
(87) WO2009156092 30.12.2009. 200953
(97) EP 2303845 06.04.2011. 201114 En
(54) BI-AND POLYCYCLIC SUBSTITUTED ISOQUINOLINE AND ISOQUINOLINE DERIVATIVES AS RHO KINASE INHIBITORS
(71) Sanofi-Aventis, 174 Avenue de France, 75013 Paris, FR
(72) PLETTENBURG, Oliver, c/o Sanofi-Aventis Deutschland GmbH, 65926 Frankfurt am Main, DE;
LORENZ, Katrin, c/o Sanofi-Aventis Deutschland GmbH, 65926 Frankfurt am Main, DE;
LOEHN, Matthias, c/o Sanofi-Aventis Deutschland GmbH, 65926 Frankfurt am Main, DE;
DUCLOS, Olivier, c/o Sanofi-Aventis, Département Brevets, 174, avenue de France, F-75013 Paris, FR;
BISCARRAT, Sandrine, c/o Sanofi-Aventis, Département Brevets, 174, avenue de France, F-75013 Paris, FR
(74) Löschner, Thomas, et al, Sanofi-Aventis Deutschland GmbH, Patent- und Lizenzabteilung, Industriepark Höchst, Gebäude K 801, D-65926 Frankfurt am Main, DE

(51) (8) **EP 2303846 ***
C 07D 217/24
A 61K 31/472
A 61P 9/00
A 61P 27/00
A 61P 25/00
A 61P 37/00
(30) EP 24.06.2008. 08290606
US 17.02.2009. 153149 P
(86) PCT/EP2009004421 19.06.2009.
(96) EP 09768949.1 19.06.2009. En
(87) WO2009156100 30.12.2009. 200953
(97) EP 2303846 06.04.2011. 201114 En
(54) SUBSTITUTED ISOQUINOLINES AND ISOQUINOLINONES AS RHO KINASE INHIBITORS
(71) Sanofi-Aventis, 174 Avenue de France, 75013 Paris, FR
(72) PLETTENBURG, Oliver, Sanofi-Aventis Deutschland GmbH, 65926 Frankfurt am Main, DE;
LORENZ, Katrin, Sanofi-Aventis Deutschland GmbH, 65926 Frankfurt am Main, DE;
WESTON, John, Sanofi-Aventis Deutschland GmbH, 65926 Frankfurt am Main, DE;
LOEHN, Matthias, Sanofi-Aventis Deutschland GmbH, 65926 Frankfurt am Main, DE;
KLEEMANN, Heinz-Werner, Sanofi-Aventis Deutschland GmbH, 65926 Frankfurt am Main, DE;
DUCLOS, Olivier, Sanofi-Aventis, Département Brevets, 174, avenue de France, F-75013 Paris, FR;
JEANNOT, Frédéric, c/o Sanofi-Aventis, Département Brevet, 174, avenue de France, F-75013 Paris, FR
(74) Löschner, Thomas, et al, Sanofi-Aventis Deutschland GmbH, Patent- und Lizenzabteilung, Industriepark Höchst, Gebäude K 801, D-65926 Frankfurt am Main, DE

(51) (8) **EP 2313374 ***
C 07D 217/24
C 07D 217/02
C 07D 217/22
C 07D 405/12
C 07D 409/12
C 07D 417/12
A 61K 31/472
A 61K 31/4725
A 61P 9/12
A 61P 43/00
(30) EP 24.06.2008. 08290605
US 17.02.2009. 153145
(86) PCT/EP2009004420 19.06.2009.
(96) EP 09768948.3 19.06.2009. En
(87) WO2009156099 30.12.2009. 200953
(97) EP 2313374 27.04.2011. 201117 En
(54) 6-SUBSTITUTED ISOQUINOLINES AND ISOQUINOLINONES
(71) Sanofi-Aventis, 174 Avenue de France, 75013 Paris, FR
(72) PLETTENBURG, Oliver, c/o Sanofi-Aventis Deutschland GmbH, 65926 Frankfurt am Main, DE;
LORENZ, Katrin, c/o Sanofi-Aventis Deutschland GmbH, 65926 Frankfurt am Main, DE;
LOEHN, Matthias, c/o Sanofi-Aventis Deutschland GmbH, 65926 Frankfurt am Main, DE;
WESTON, John, c/o Sanofi-Aventis Deutschland GmbH, 65926 Frankfurt am Main, DE;
KLEEMANN, Heinz-Werner, c/o Sanofi-Aventis Deutschland GmbH, 65926 Frankfurt am Main, DE
(74) Löschner, Thomas, et al, Sanofi-Aventis Deutschland GmbH, Patents Germany, Industriepark Höchst, Building K801, 65926 Frankfurt am Main, DE

(51) (8) **EP 2318372 ***
C 07D 221/26
A 61K 31/485
A 61P 25/36
A 61P 29/00
(30) US 21.07.2008. 82255 P
(86) PCT/US2009051200 21.07.2009.
(96) EP 09790652.3 21.07.2009. En
(87) WO2010011619 28.01.2010. 201004
(97) EP 2318372 11.05.2011. 201119 En
(54) LARGE SUBSTITUENT, NON-PHENOLIC AMINE OPIOIDS
(71) Rensselaer Polytechnic Institute, Office of the Technology Commercialization, 110 8th Street, J Building, 3rd Floor, Troy, NY 12180, US
(72) WENTLAND, Mark P., 9 Dennin Drive, Menands, New York 12204, US
(74) Graf von Stosch, Andreas, et al, Graf von Stosch, Patentanwaltsgesellschaft mbH, Prinzregentenstrasse 22, 80538 München, DE

(51) (8) **EP 2307381 ***
C 07D 231/06
C 07D 231/12
C 07D 233/22
C 07D 261/08
C 07D 271/06
(30) EP 09.06.2008. 08010458
(86) PCT/EP2009004144 09.06.2009.
(96) EP 09772072.6 09.06.2009. En
(87) WO2010000372 07.01.2010. 201001
(97) EP 2307381 13.04.2011. 201115 En
(54) NEW DRUGS FOR INHIBITING AGGREGATION OF PROTEINS INVOLVED IN DISEASES LINKED TO PROTEIN AGGREGATION AND/OR NEURODEGENERATIVE DISEASES
(71) Ludwig-Maximilians-Universität München, Geschwister-Scholl-Platz 1, 80539 München, DE;
Max-Planck-Gesellschaft zur Förderung, der Wissenschaften e.V., Hofgartenstrasse 8, 80539 München, DE
(72) GIESE, Armin, Hermann-Hahn-Platz 7, 81477 München, DE;
BERTSCH, Uwe, Vogelanger 25, 86937 Scheuring, DE;
KRETZSCHMAR, Hans, Nelkenweg 5A, 82515 Wolfratshausen, DE;
HABECK, Mathias, Terofalstr. 9, 80689 München, DE;
HIRSCHBERGER, Thomas, Landsberger Str. 71, 80339 München, DE;
TAVAN, Paul, Schinkelstr. 35, 80805 München, DE;
GRIESINGER, Christian, Hainholzweg 74, 37085 Göttingen, DE;
LEONOV, Andrei, Immanuel-Kant-Str. 32, 37083 Göttingen, DE;
RYAZANOV, Sergey, Rosenwinkel 23, 37081 Göttingen, DE;
WEBER, Petra, Pelargonienweg 51, 81377 M nchen, DE;
GEISSEN, Markus, Wieselkamp 9, 21244 Buchholz i.d. Nordheide, DE;
GROSCHUP, Martin, H., Erlenweg 9, 17498 Weitenhagen, DE;
WAGNER, Jens, Bramburgstrasse 3, 81375 München, DE
(74) Vossius & Partner, Siebertstrasse 4, 81675 München, DE

(51) (8) **EP 2118067 ***
C 07D 231/40
C 07D 401/04
C 07D 403/04
C 07D 403/12
C 07D 403/14
C 07D 407/04
C 07D 407/14
C 07D 409/04
C 07D 413/12
C 07D 473/04
C 07D 487/04
A 61K 31/4155
A 61P 25/00
(30) US 16.01.2007. 880629 P
(86) PCT/IB2008000090 16.01.2008.
(96) EP 08702252.1 16.01.2008. En
(87) WO2008087529 24.07.2008. 200830
(97) EP 2118067 18.11.2009. 200947 En
(54) NICOTINIC ACETYLCHOLINE RECEPTOR MODULATORS
(71) Siena Biotech S.p.A., Via Banchi di Sotto, 34, 53100 Siena, IT;
Wyeth Pharmaceuticals, 5 Giralda Farms, Madison NJ 07940, US
(72) GHIRON, Chiara, Via Banchi di Sotto, 34, I-53100 Siena, IT;
NENCINI, Arianna, Via Banchi di Sotto, 34, I-53100 Siena, IT;
MICCO, Iolanda, Via Banchi di Sotto, 34, I-53100 Siena, IT;

ZANALETTI, Riccardo, Via Banchi di Sotto, 34, I-53100 Siena, IT;
MACCARI, Laura, Via Banchi di Sotto, 34, I-53100 Siena, IT;
BOTHMANN, Hendrick, Via Banchi di Sotto, 34, I-53100 Siena, IT;
HAYDAR, Simon, C/O Wyeth Parmaceuticals, CN8000-R2108, Princeton, NJ 08543-8000, US;
VARRONE, Maurizio, Via Banchi di Sotto, 34, I-53100 Siena, IT;
PRATELLI, Carmela, Via Banchi di Sotto, 34, I-53100 Siena, IT;
HARRISON, Boyd, C/O Wyeth Parmaceuticals, CN8000-R2108, Princeton, NJ 08543-8000, US
(74) Banfi, Paolo, Bianchetti Bracco Minoja S.r.l., Via Plinio, 63, 20129 Milano, IT

(51) (8) **EP 2141150**
C 07D 231/56
A 61K 31/416
A 61K 31/428
A 61K 31/433
A 61K 31/437
A 61P 1/04
A 61P 3/06
A 61P 3/10
A 61P 5/00
A 61P 7/10
A 61P 7/12
A 61P 9/00
A 61P 9/10
A 61P 9/12
A 61P 11/08
A 61P 15/00
A 61P 15/08
A 61P 19/10
A 61P 25/14
A 61P 25/16
A 61P 25/18
(30) JP 26.04.2007. 2007117676
(86) PCT/JP2008058020 25.04.2008.
(96) EP 08752094.6 25.04.2008. Ja
(87) WO2008136382 13.11.2008. 200846
(97) EP 2141150 06.01.2010. 201001 En
(54) BICYCLIC COMPOUND AND PHARMACEUTICAL USE THEREOF
(71) Takeda Pharmaceutical Company Limited, 1-1, Doshomachi 4-chome, Chuo-ku, Osaka-shi, Osaka 541-0045, JP
(72) KOIKE, Tatsuki, c/o TAKEDA PHARMACEUTICAL COMPANY LIMITED, 17-85 Jusohonmachi 2-chome, Yodogawa-ku, Osaka-shi, Osaka 532-8686, JP;
TAKAI, Takafumi, c/o TAKEDA PHARMACEUTICAL COMPANY LIMITED, 17-85 Jusohonmachi 2-chome, Yodogawa-ku, Osaka-shi, Osaka 532-8686, JP;
HOASHI, Yasutaka, c/o TAKEDA PHARMACEUTICAL COMPANY LIMITED, 17-85 Jusohonmachi 2-chome, Yodogawa-ku, Osaka-shi, Osaka 532-8686, JP
(74) Jones, Nicholas Andrew, et al, Withers & Rogers LLP, Goldings House, 2 Hays Lane, London, SE1 2HW, GB

(51) (8) **EP 2310373 ***
C 07D 231/56
C 07D 275/04
C 07D 403/12
C 07D 405/12
C 07D 471/04
A 61K 31/437
A 61P 35/00
(30) US 01.07.2008. 77426 P
(86) PCT/US2009049453 01.07.2009.
(96) EP 09774475.9 01.07.2009. En
(87) WO2010003025 07.01.2010. 201001
(97) EP 2310373 20.04.2011. 201116 En
(54) BICYCLIC HETEROCYCLES AS MEK KINASE INHIBITORS
(71) Genentech, Inc., 1 DNA Way, South San Francisco CA 94080-4990, US
(72) HEALD, Robert, Andrew, c/o Argenta Discovery Limited, 8/9 Spire Green Center, Flex Meadow, Harlow CM195TR, GB;
JACKSON, Philip, c/o Argenta Discovery Limited, 8/9 Spire Green Center, Flex Meadow, Harlow CM195TR, GB;
LYSSIKATOS, Joseph, 42 Alta Avenue, Piedmont, CA 94611, US;
PRICE, Stephen, c/o Argenta Discovery Limited, 8/9 Spire Green Center, Flex Meadow, Harlow CM195TR, GB;
SAVY, Pascal, Pierre, c/o Argenta Discovery Limited, 8/9 Spire Green Center, Flex Meadow, Harlow CM195TR, GB
(74) Kiddle, Simon John, et al, Mewburn Ellis LLP, 33 Gutter Lane, London, EC2V 8AS, GB

(51) (8) **EP 2297114 ***
C 07D 233/90
C 07D 401/12
C 07D 401/14
C 07D 407/12
C 07D 409/06
C 07D 409/14
C 07D 413/06
C 07D 413/14
C 07D 417/06
C 07D 417/12
C 07D 471/04
C 07D 487/04
C 07D 487/08
C 07D 495/04
(30) JP 19.06.2008. 2008161049
JP 13.01.2009. 2009004882
(86) PCT/JP2009061438 17.06.2009.
(96) EP 09766748.9 17.06.2009. En
(87) WO2009154300 23.12.2009. 200952
(97) EP 2297114 23.03.2011. 201112 En
(54) HETEROCYCLIC COMPOUND AND USE THEREOF
(71) Takeda Pharmaceutical Company Limited, 1-1 Doshomachi 4-chome, Chuo-ku, Osaka-shi, Osaka 541-0045, JP
(72) KUROITA, Takanobu, c/o TAKEDA PHARMACEUTICAL COMPANY LIMITED, 17-85 Jusohonmachi 2-chome, Yodogawa-ku, Osaka-shi, Osaka 532-8686, JP;
IMAEDA, Yasuhiro, 1544 McIntyre Drive, Ann Arbor, MI 48105, US;

IWANAGA, Kouichi, c/o TAKEDA PHARMACEUTICAL COMPANY LIMITED, 17-85 Jusohonmachi 2-chome, Yodogawa-ku, Osaka-shi, Osaka 532-8686, JP;
TAYA, Naohiro, c/o TAKEDA PHARMACEUTICAL COMPANY LIMITED, 17-85 Jusohonmachi 2-chome, Yodogawa-ku, Osaka-shi, Osaka 532-8686, JP;
TOKUHARA, Hidekazu, c/o TAKEDA PHARMACEUTICAL COMPANY LIMITED, 17-85 Jusohonmachi 2-chome, Yodogawa-ku, Osaka-shi, Osaka 532-8686, JP;
FUKASE, Yoshiyuki, c/o TAKEDA PHARMACEUTICAL COMPANY LIMITED, 17-85 Jusohonmachi 2-chome, Yodogawa-ku, Osaka-shi, Osaka 532-8686, JP
(74) König, Gregor Sebastian, et al, König Szynka Tilmann von Renesse, Patentanwälte Partnerschaft, Lohengrinstrasse 11, 40549 Düsseldorf, DE

(51) (8) **EP 2310374 ***
C 07D 237/20
C 07D 237/22
C 07D 401/12
A 61K 31/501
A 61P 3/04
(30) EP 03.07.2008. 08159591
(86) PCT/EP2009004745 01.07.2009.
(96) EP 09772156.7 01.07.2009. En
(87) WO2010000456 07.01.2010. 201001
(97) EP 2310374 20.04.2011. 201116 En
(54) SUBSTITUTED 6- (1-PIPERAZINYL) - PYRIDAZINES AS 5-HT6 RECEPTOR ANTAGONISTS
(71) Janssen Pharmaceutica N.V., Turnhoutseweg 30, 2340 Beerse, BE
(72) BARTOLOMÉ-NEBREDA, José Manuel, Janssen-Cilag S.A ., Calle Jarama, 75 Poligono Industrial, 45007 Toledo, ES;
MACDONALD, Gregor, James, Janssen Pharmaceutica NV, Turnhoutseweg 30, 2340 Beerse, BE;
VAN GOOL, Michiel, Luc, Maria, Janssen-Cilag S., ., Calle Jarama, 75 Poligono Industria, 45007 Toledo, ES;
CONDE-CEIDE, Susana, Janssen-Cilag S.A ., Calle Jarama, 75 Poligono Industrial, 45007 Toledo, ES;
DELGADO-JIMÉNEZ, Francisca, Janssen-Cilag S.A ., Calle Jarama, 75 Poligono Industrial, 45007 Toledo, ES
(74) Quaghebeur, Luc, et al, Janssen Pharmaceutica N.V., Patent Department, Turnhoutseweg 30, 2340 Beerse, BE

(51) (8) **EP 2313376 ***
C 07D 237/28
C 07D 405/04
C 07D 409/04
A 61K 31/502
A 61P 25/00
A 61P 35/00
C 07D 237/36
(30) FR 11.07.2008. 0803974
(86) PCT/FR2009051362 09.07.2009.
(96) EP 09784493.0 09.07.2009. Fr
(87) WO2010004215 14.01.2010. 201002
(97) EP 2313376 27.04.2011. 201117 Fr
(54) SUBSTITUTED 1-BENZYL-CINNOLIN-4(1H)-ONE DERIVATIVES, PREPARATION THEREOF, AND THERAPEUTIC USE THEREOF
(71) Sanofi-Aventis, 174 Avenue de France, 75013 Paris, FR
(72) BARBAGALLO, Elodie, c/o sanofi-aventis, Département Brevets, 174 avenue de France, F-75013 Paris, FR;
RINALDI-CARMONA, Murielle, c/o sanofi-aventis, Département Brevets, 174 avenue de France, F-75013 Paris, FR;
ROUX, Pascale, c/o sanofi-aventis, Département Brevets, 174 avenue de France, F-75013 Paris, FR;
VERNHET, Claude, c/o sanofi-aventis, Département Brevets, 174 avenue de France, F-75013 Paris, FR
(74) Werner, Alain Henri, Sanofi-Aventis, Département Brevets, 174, avenue de France, 75013 Paris, FR

(51) (8) **EP 2318377 ***
C 07D 239/02
(30) US 31.07.2008. 85309 P
(86) PCT/US2009052469 31.07.2009.
(96) EP 09803674.2 31.07.2009. En
(87) WO2010014939 04.02.2010. 201005
(97) EP 2318377 11.05.2011. 201119 En
(54) PYRIMIDINE COMPOUNDS, COMPOSITIONS AND METHODS OF USE
(71) Genentech, Inc., 1 DNA Way, South San Francisco, CA 94080, US
(72) BERGERON, Philippe, 941 Dolores Street, Apt. 1, San Francisco, California 94110, US;
COHEN, Frederick, 2001 Mcallister Street, 143, San Francisco, CA 94118, US;
ESTRADA, Anthony, 7 Pyxie Lane, San Carlos, CA 94070, US;
KOEHLER, Michael, F. T., 516 Georgia Avenue, Palo Alto, CA 94306, US;
LAU, Kevin, Hon Luen, 55 West 20th Avenue, 102, San Mateo, CA 94403, US;
LY, Cuong, 45 Westdale Avenue, Daly City, CA 94015, US;
LYSSIKATOS, Joseph, P., 42 Alta Avenue, Piedmont, CA 94611, US;
ORTWINE, Daniel, Fred, 138 Cortona Drive, San Ramon, CA 94582, US;
PEI, Zhonghua, C/o Genentech Inc., Ms 49, 1 Dna Way, South San Francisco, CA 94080, US;
ZHAO, Xianrui, 619 North San Mateo Drive, Apt. 102, San Mateo, CA 94401, US
(74) Kiddle, Simon John, et al, Mewburn Ellis LLP, 33 Gutter Lane, London, EC2V 8AS, GB

(51) (8) **EP 2300440 ***
C 07D 239/22
C 07D 401/04
C 07D 471/04
C 07D 405/04
A 61K 31/517
A 61K 31/519
A 61P 29/00
(30) EP 02.06.2008. 08157398
(86) PCT/EP2009056593 29.05.2009.
(96) EP 09757461.0 29.05.2009. En
(87) WO2009147079 10.12.2009. 200950
(97) EP 2300440 30.03.2011. 201113 En
(54) 3,4-DIHYDROPYRIMIDINE TRPA1 ANTAGONISTS
(71) Janssen Pharmaceutica, N.V., Turnhoutseweg 30, 2340 Beerse, BE
(72) GIJSEN, Henricus Jacobus Maria, Janssen Pharmaceutica NV, Turnhoutseweg 30, B-2340 Beerse, BE;

BERTHELOT, Didier, Jean-Claude, Janssen Pharmaceutica NV, Turnhoutseweg 30, B-2340 Beerse, BE;
DE CLEYN, Michel, Anna, Jozef, Janssen Pharmaceutica NV, Turnhoutseweg 30, B-2340 Beerse, BE
(74) Verberckmoes, Filip Gerard, Janssen Pharmaceutica N.V., J&J Patent Law Department, Turnhoutseweg 30, 2340 Beerse, BE

(51) (8) **EP 2315755 ***
C 07D 239/70
C 07D 495/04
(30) US 13.05.2008. 52816 P
(86) PCT/US2009043068 07.05.2009.
(96) EP 09736709.8 07.05.2009. En
(87) WO2009140127 19.11.2009. 200947
(97) EP 2315755 04.05.2011. 201118 En
(54) SYNTHESIS OF DIHYDROTHIENO[3,2-d]PYRIMIDINE DIOLS AND SIMILAR PYRIMIDINE DIOLS
(71) Boehringer Ingelheim International GmbH, Binger Strasse 173, 55216 Ingelheim, DE;
Boehringer Ingelheim Pharma GmbH & Co. KG, Binger Strasse 173, 55216 Ingelheim, DE
(72) FRUTOS, Rogelio, Perez, Boehringer Ingelheim Pharmaceuticals Inc., 900 Ridgebury Road, P.O. Box 368, Ridgefield, CT 06877-0368, US;
TAMPONE, Thomas, G., Boehringer Ingelheim Pharmaceuticals Inc., 900 Ridgebury Road, P.O. Box 368, Ridgefield, CT 06877-0368, US;
MULDER, Jason, Alan, Boehringer Ingelheim Pharmaceuticals Inc., 900 Ridgebury Road, P.O. Box 368, Ridgefield, CT 06877-0368, US;
KRISHNAMURTHY, Dhileepkumar, Boehringer Ingelheim Pharmaceuticals Inc., 900 Ridgebury Road, P.O. Box 368, Ridgefield, CT 06877-0368, US;
SENANAYAKE, Chris, Hugh, Boehringer Ingelheim Pharmaceuticals Inc., 900 Ridgebury Road, P.O. Box 368, Ridgefield, CT 06877-0368, US
(74) Hammann, Heinz, et al, Boehringer Ingelheim GmbH, Corporate Patents, Binger Strasse 173, 55216 Ingelheim am Rhein, DE

(51) (8) **EP 2297116 ***
C 07D 239/84
A 61K 31/517
A 61P 7/02
(30) GB 16.05.2008. 0808948
(86) PCT/GB2009050508 13.05.2009.
(96) EP 09746105.7 13.05.2009. En
(87) WO2009138788 19.11.2009. 200947
(97) EP 2297116 23.03.2011. 201112 En
(54) SUBSTITUTED QUINAZOLINES
(71) Shire LLC, 9200 Brookfield Court, Florence, KY 41042, US
(72) GOLDING, Bernard, 42 Dukesfield, Shiremoor, Newcastle upon Tyne, Tyne and Wear NE27 0EZ, GB;
CICALA, Peter, Shire Pharmaceuticals Inc., 725 Chesterbrook Boulevard, Wayne, Pennsylvania 19087-8301, US;
FRANKLIN, Richard, 3 Rosedene Gardens, Fleet, Hampshire GU51 4NQ, GB;
MACLEOD, Angus, BioFocus DPI, Chesterford Research Park, Saffron Walden, Essex CB10 1XL, GB
(74) Harrison Goddard Foote, Belgrave Hall, Belgrave Street, Leeds, LS2 8DD, GB

(51) (8) **EP 2061772 ***
C 07D 239/88
C 07D 239/93
A 61K 31/517
A 61P 35/04
A 61P 25/16
A 61P 25/28
(30) US 11.09.2006. 843590 P
US 20.03.2007. 895889 P
(86) PCT/US2007077971 10.09.2007.
(96) EP 07842112.0 10.09.2007. En
(87) WO2008033747 20.03.2008. 200812
(97) EP 2061772 27.05.2009. 200922 En
(54) MULTI-FUNCTIONAL SMALL MOLECULES AS ANTI-PROLIFERATIVE AGENTS
(71) Curis, Inc., 4 Maguire Road, Lexington, MA 02421, US
(72) CAI, Xiong, 26 Concord Ave., Belmont, MA 02478, US;
QIAN, Changgeng, 163 Old Connecticut Path, Wayland, MA 01778, US;
GOULD, Stephen, 265 Highland Avenue, San Carlos, CA 94070, US;
ZHAI, Haixiao, 283 South Road, Bedford, MA 01730, US
(74) Stevens, Ian Edward, et al, Potter Clarkson LLP, Park View House, 58 The Ropewalk, Nottingham, NG1 5DD, GB

(51) (8) **EP 2300441 ***
C 07D 239/95
A 61K 31/517
A 61P 35/00
(30) US 07.04.2008. 42994 P
US 07.04.2008. 42998 P
(86) PCT/US2009039792 07.04.2009.
(96) EP 09731193.0 07.04.2009. En
(87) WO2009126639 15.10.2009. 200942
(97) EP 2300441 30.03.2011. 201113 En
(54) CRYSTALLINE SALT FORMS OF ANTIFOLATE COMPOUNDS AND METHODS OF MANUFACTURING THEREOF
(71) Chelsea Therapeutics, Inc., 3530 Toringdon Way, Suite 200, Charlotte, NC 28277, US
(72) PIMPLASKAR, Harish, K., 11210 Travis Gulch Drive, Charlotte, NC 28277, US;
LEBEDEV, Mikhail, Fornhöjdsvägen 76, S-152 58 Södertälje, SE;
HORVATH, Karol, Fornhöjdsvägen 56, S-152 Södertälje, SE
(74) Noel, Chantal Odile, et al, Cabinet Ors, 36, rue de St Pétersbourg, 75008 Paris, FR

(51) (8) **EP 2321286 ***
C 07D 241/52
C 07D 401/04
A 61K 31/497
A 61P 25/28
(30) EP 26.06.2008. 08290619
(86) PCT/IB2009006445 25.06.2009.
(96) EP 09769668.6 25.06.2009. En
(87) WO2009156857 30.12.2009. 200953
(97) EP 2321286 18.05.2011. 201120 En
(54) SUBSTITUTED N-OXIDE PYRAZINE DERIVATIVES

(71) Mitsubishi Tanabe Pharma Corporation, 2-6-18, Kitahama Chuo-ku, Osaka-shi, Osaka 541-8505, JP;
Sanofi-Aventis, 174 Avenue de France, 75013 Paris, FR
(72) LOCHEAD, Alistair, Patent Department, c/o Sanofi-aventis, 174 avenue de France, F-75013 Paris, FR;
SAADY, Mourad, Patent Department, c/o Sanofi-Aventis, 174 avenue de France, F-75013 Paris, FR;
YAICHE, Philippe, c/o Sanofi-Aventis, Département Brevets, 174 avenue de France, F-75013 Paris, FR
(74) Tinel, Marie-Line, et al, Sanofi-Aventis, Département Brevets, 174, avenue de France, F-75013 Paris, FR

(51) (8) **EP 2298747**
C 07D 249/08
A 61K 31/4196
A 61K 31/42
A 61K 31/422
A 61K 31/4245
A 61K 31/427
A 61K 31/4439
A 61K 31/496
A 61K 31/506
A 61K 31/5377
A 61K 31/541
A 61P 3/04
A 61P 3/06
A 61P 3/10
A 61P 9/12
A 61P 19/10
A 61P 25/28
A 61P 27/06
A 61P 43/00
C 07D 401/04/
(30) JP 03.07.2008. 2008174181
(86) PCT/JP2009062081 02.07.2009.
(96) EP 09773524.5 02.07.2009. Ja
(87) WO2010001946 07.01.2010. 201001
(97) EP 2298747 23.03.2011. 201112 En
(54) TRIAZOLE DERIVATIVE OR SALT THEREOF
(71) Astellas Pharma Inc., 3-11, Nihonbashi-Honcho 2-chome, Chuo-ku, Tokyo 103-8411, JP
(72) YOSHIMURA, Seiji, c/o Astellas Pharma Inc., 3-11 Nihonbashi-Honcho 2-chome, Chuo-ku, Tokyo 103-8411, JP;
KAWANO, Noriyuki, c/o Astellas Pharma Inc., 3-11 Nihonbashi-Honcho 2-chome, Chuo-ku, Tokyo 103-8411, JP;
KAWANO, Tomoaki, c/o Astellas Pharma Inc., 3-11 Nihonbashi-Honcho 2-chome, Chuo-ku, Tokyo 103-8411, JP;
SASUGA, Daisuke, c/o Astellas Pharma Inc., 3-11 Nihonbashi-Honcho 2-chome, Chuo-ku, Tokyo 103-8411, JP;
KOIKE, Takanori, c/o Astellas Pharma Inc., 3-11 Nihonbashi-Honcho 2-chome, Chuo-ku, Tokyo 103-8411, JP;
WATANABE, Hideyuki, c/o Astellas Pharma Inc., 3-11 Nihonbashi-Honcho 2-chome, Chuo-ku, Tokyo 103-8411, JP;
FUKUDOME, Hiroki, c/o Astellas Pharma Inc., 3-11 Nihonbashi-Honcho 2-chome, Chuo-ku, Tokyo 103-8411, JP;
SHIRAISHI, Nobuyuki, c/o Astellas Pharma Inc., 3-11 Nihonbashi-Honcho 2-chome, Chuo-ku, Tokyo 103-8411, JP;
MUNAKATA, Ryosuke, c/o Astellas Pharma Inc., 3-11 Nihonbashi-Honcho 2-chome, Chuo-ku, Tokyo 103-8411, JP;
HOSHII, Hiroaki, c/o Astellas Pharma Inc., 3-11 Nihonbashi-Honcho 2-chome, Chuo-ku, Tokyo 103-8411, JP;
MIHARA, Kayoko, c/o Astellas Pharma Inc., 3-11 Nihonbashi-Honcho 2-chome, Chuo-ku, Tokyo 103-8411, JP
(74) HOFFMANN EITLE, Patent- und Rechtsanwälte, Arabellastraße 4, 81925 München, DE

(51) (8) **EP 2300443 ***
C 07D 249/08
C 07D 401/12
C 07D 401/04
C 07D 401/06
C 07D 401/14
A 61K 31/4196
A 61K 31/4709
A 61K 31/454
A 61P 11/00
A 61P 29/00
(30) US 11.07.2008. 79837 P
(86) PCT/IB2009052986 09.07.2009.
(96) EP 09786555.4 09.07.2009. En
(87) WO2010004517 14.01.2010. 201002
(97) EP 2300443 30.03.2011. 201113 En
(54) TRIAZOLE DERIVATIVES USEFUL FOR THE TREATMENT OF DISEASES
(71) Pfizer Limited, Ramsgate Road, Sandwich, Kent CT13 9NJ, GB
(72) JONES, Lyn Howard, Pfizer Global Research and Development, Ramsgate Road, Sandwich Kent CT13 9NJ, GB;
ROBERTS, Dannielle Frances, Pfizer Global Research and Development, Ramsgate Road, Sandwich Kent CT13 9NJ, GB;
STRANG, Ross Sinclair, Pfizer Global Research and Development, Ramsgate Road, Sandwich Kent CT13 9NJ, GB
(74) Laurent, Claire, et al, Pfizer Limited, European Patent Department, Ramsgate Road, Sandwich, Kent CT13 9NJ, GB

(51) (8) **EP 2295416**
C 07D 249/12
C 07D 401/04
C 07D 405/04
C 07D 403/04
A 61K 31/4196
A 61P 35/00
(30) US 18.11.2004. 628979 P
US 18.08.2005. 709358 P
US 06.10.2005. 725044 P
(96) EP 10075465.4 17.11.2005. En
(97) EP 2295416 16.03.2011. 201111 En
(54) Triazole compounds that modulate HSP90 activity
(71) Synta Pharmaceuticals Corp., 45 Hartwell Avenue, Lexington, MA 02421, US
(72) Ying, Weiven, 31 Bayberry Road, Groton, MA 01450, US;
James, David, 700 Huron Avenue, Apt. 15H, Cambridge, MA 02138, US;
Zhang, Shijie, 27 Lojko Drive, Nashua, NH 03062, US;
Przewloka, Teresa, 23 Merrimack Meadows Lane, Tewksbury, MA 01876, US;
Chae, Junghyun, 3 Brattle Drive, No. 10, Arlington, MA 02474, US;
Chimmanamada, Dinesh U, 79 Summer Street, Unit 4A, Arlington, MA 02474, US;
Lee, Chi-Wan, 240 Magill Drive, Grafton, MA 01519, US;
Kostik, Elena, 32 School Street, Arlington, MA 02476, US;
NG, Howard P., 17 Worcester Street, No. 1, Belmont, MA 02478, US;

Foley, Kevin, 30 Cambridge Park Drive, No. 4109, Cambridge, MA 02140, US;
Du, Zhenjian, 18 Overlock Drive, Northborough, MA 01532, US;
Barsoum, James, 6 Moreland Avenue, Lexington, MA 02421, US
(74) Snodin, Michael D., et al, Potter Clarkson LLP, Park View House, 58 The Ropewalk, Nottingham, NG1 5DD, GB

(51) (8) **EP 2298748**
C 07D 249/12
C 07D 401/04
C 07D 405/04
C 07D 403/04
A 61K 31/4196
A 61P 35/00
(30) US 18.11.2004. 628979 P
US 18.08.2005. 709358 P
US 06.10.2005. 725044 P
(96) EP 10075452.2 17.11.2005. En
(97) EP 2298748 23.03.2011. 201112 En
(54) Triazole compounds that modulate HSP90 activity
(71) Synta Pharmaceuticals Corp., 45 Hartwell Avenue, Lexington, MA 02421, US
(72) Ying, Weiwen, 31 Bayberry Road, Groton, Massachusetts 01450, US;
James, David, 700 Huron Avenue, Apt. 15H, Cambridge, Massachusetts 02138, US;
Zhang, Shijie, 27 Lojko Drive, Nashua, New Hampshire 03062, US;
Przewloka, Teresa, 23 Merrimack Meadows lane, Tewksbury, Massachusetts 01876, US;
Chae, Junghyun, 3 Brattle Drive, No. 10, Arlington, Massachusetts 02474, US;
Chimmanamada, Dinesh U, 79 Summer Street, Unit 4A, Arlington, Massachusetts 02474, US;
Lee, Chi-Wan, 240 Magill Drive, Grafton, Massachusetts 01519, US;
Kostik, Elena, 32 School Street, Arlington, Massachusetts 02476, US;
Ng, Howard P, 17 Worcester Street, No. 1, Belmont, Massachusetts 02478, US;
Foley, Kevin, 30 Cambridge Park Drive, No. 4109, Cambridge, Massachusetts 02140, US;
Du, Zhenjian, 18 Overlook Drive, Northborough, Massachusetts 01532, US;
Barsoum, James, 6 Moreland Avenue, Lexington, Massachusetts 02421, US
(74) Snodin, Michael D., et al, Potter Clarkson LLP, Park View House, 58 The Ropewalk, Nottingham, NG1 5DD, GB

(51) (8) **EP 2300444 ***
C 07D 251/10
(30) EP 23.05.2008. 08009483
(86) PCT/EP2009002997 24.04.2009.
(96) EP 09749530.3 24.04.2009. En
(87) WO2009141040 26.11.2009. 200948
(97) EP 2300444 30.03.2011. 201113 En
(54) PROCESS FOR THE SYNTHESIS OF 3,6-DIHYDRO-1,3,5-TRIAZINE DERIVATIVES
(71) POXEL SAS, 200 Avenue Jean Jaures, 69007 Lyon, FR
(72) AUBOURG, Stéphanie, 4 rue Louis Armstron, F- 45800 Saint Jean de Braye, FR;
BOUDET, Bernard, 98 rue du Faubourg d'Orléans, F-45300 Pithiviers, FR;
CRAVO, Daniel, 123, Avenue Jules Ferry, F-78500 Sartrouville, FR;
HELMREICH, Matthias, Erwin-Rohde-Strasse 10, 69120 Heidelberg, DE
(74) Tezier Herman, Béatrice, et al, Cabinet Becker & Associés, 25, rue Louis Le Grand, 75002 Paris, FR

(51) (8) **EP 2321287 ***
C 07D 263/28
C 07D 413/12
A 61K 31/421
A 61K 31/422
A 61P 25/00
A 61P 3/04
A 61P 3/06
A 61P 3/10
(30) EP 24.07.2008. 08161060
(86) PCT/EP2009059026 15.07.2009.
(96) EP 09780600.4 15.07.2009. En
(87) WO2010010014 28.01.2010. 201004
(97) EP 2321287 18.05.2011. 201120 En
(54) 4,5-DIHYDRO-OXAZOL-2-YL DERIVATIVES
(71) F. Hoffmann-La Roche AG, Grenzacherstrasse 124, 4070 Basel, CH
(72) GALLEY, Guido, Katzenbuckelweg 14, 79618 Rheinfelden, DE;
GOERGLER, Annick, 5 mittlerer Noehlen Pfad, F-68000 Colmar, FR;
GROEBKE ZBINDEN, Katrin, Laubibergstrasse 61, CH-4410 Liestal, CH;
NORCROSS, Roger, Rheinfelderstrasse 2, CH-4305 Olsberg, CH
(74) Poppe, Regina, F.Hoffmann-La Roche AG, Patent Department, Grenzacherstrasse 124, 4070 Basel, CH

(51) (8) **EP 2303850 ***
C 07D 263/54
A 61K 31/423
A 61K 31/4439
A 61K 31/454
A 61K 31/496
A 61K 31/5377
A 61K 31/541
A 61P 29/00
A 61P 37/00
A 61P 37/06
C 07D 263/56
C 07D 413/12
(30) US 13.06.2008. 61497 P
(86) PCT/AU2009000739 12.06.2009.
(96) EP 09761173.5 12.06.2009. En
(87) WO2009149508 17.12.2009. 200951
(97) EP 2303850 06.04.2011. 201114 En
(54) NOVEL POTASSIUM CHANNEL BLOCKERS AND USES THEREOF
(71) Bionomics Limited, 31 Dalgleish Street, Thebarton, S.A. 5031, AU
(72) HARVEY, Andrew John, 14 Almond Street, Goodwood, South Australia 5034, AU;
FLYNN, Bernard Luke, 38 Lusk Drive, Vermont, Victoria 3133, AU;

MOULD, Jorgen Alvar, 41 Company Street, Semaphore, South Australia 5019, AU;
PAUL, Dharam, 3/90 Ashley Street, Torrensville, South Australia 5031, AU;
GILL, Gurmit Singh, 51 Yarcombe Crescent, Craigieburn, Victoria 3064, AU;
RIPPER, Justin Anthony, 30 Eaton Street, Cumberland Park, South Australia 5041, AU;
COOKE, Rachel Christine, Unit 1, 16 Modler Road, Morphett Vale, South Australia 5162, AU;
CROSSMAN, Julia Stephanie, 63 Stuart Road, South Plympton, South Australia 5038, AU;
BAELL, Jonathan Bayldon, 77 Hawker Street, Ivanhoe, victoria 3079, AU;
KUCHEL, Nathan Wayne, 1/358 Cross Road, Clarence Park, South Australia 5034, AU;
SINGH, Rajinder, 35 Jervois Street, Torrensville, South Australia 5031, AU
(74) Kling, Simone, Lavoix Munich, Bayerstrasse 85a, 80335 München, DE

(51) (8) **EP 2303851 ***
C 07D 265/36
C 07D 498/04
A 61K 31/538
A 61P 25/00
(30) DK 27.06.2008. 200800887
(86) PCT/EP2009057928 24.06.2009.
(96) EP 09769306.3 24.06.2009. En
(87) WO2009156458 30.12.2009. 200953
(97) EP 2303851 06.04.2011. 201114 En
(54) NOVEL PHENOLIC AND CATECHOLIC AMINES AND PRODRUGS THEREOF
(71) H. Lundbeck A/S, Ottiliavej 9, 2500 Valby, DK
(72) PÜSCHL, Ask, Harsdorffsvej 7A 4tv, DK-1874 Frederiksberg, DK;
JØRGENSEN, Morten, Aldershvilevej 94, DK-2880 Bagsværd, DK;
BANG-ANDERSEN, Benny, Lillegrund 33, DK-2300 Copenhagen S, DK

(51) (8) **EP 2315756 ***
C 07D 271/08
A 61K 31/4245
A 61P 1/00
A 61P 11/00
A 61P 17/00
A 61P 19/00
A 61P 25/00
A 61P 27/00
A 61P 29/00
A 61P 31/00
A 61P 35/00
A 61P 37/00
A 61P 43/00
(30) US 08.07.2008. 78876 P
US 09.02.2009. 150873 P
(86) PCT/US2009049794 07.07.2009.
(96) EP 09790108.6 07.07.2009. En
(87) WO2010005958 14.01.2010. 201002
(97) EP 2315756 04.05.2011. 201118 En
(54) 1,2,5-OXADIAZOLES AS INHIBITORS OF INDOLEAMINE 2,3-DIOXYGENASE
(71) Incyte Corporation, Experimental Station, Route 141&Henry Clay Road, Building E336, Wilmington, Delaware 19880, US
(72) COMBS, Andrew, P., 329 East Doe Run Road, Kennett Square, PA 19348, US;
YUE, Eddy, W., 9 Altemus Drive, Landenberg, PA 19350, US;
SPARKS, Richard, B., 2616 Larkin Road, Boothwyn, PA 19061, US;
ZHU, Wenyu, 21 Abel Place, Media, PA 19063, US;
ZHOU, Jiacheng, 46 Bay Boulevard, Newark, DE 19702, US;
LIN, Qiyan, 6 Henlopen Court, Newark, DE 19711, US;
WENG, Lingkai, 28 Landmark Drive, Malvern, PA 19355, US;
YUE, Tai-Yuen, 501 Blackbird Drive, Hockessin, DE 19707, US;
LIU, Pingli, 205 Pilot Court, Newark, DE 19702, US
(74) Howard, Paul Nicholas, Carpmaels & Ransford, One Southampton Row, London, WC1B 5HA, GB

(51) (8) **EP 2313382 ***
C 07D 277/24
A 61K 31/425
(30) EP 16.06.2008. 08380177
US 16.06.2008. 139661
(86) PCT/EP2009057324 15.06.2009.
(96) EP 09765806.6 15.06.2009. En
(87) WO2009153226 23.12.2009. 200952
(97) EP 2313382 27.04.2011. 201117 En
(54) 5-(4-METHANESULFONYL-PHENYL)-THIAZOLE DERIVATIVES FOR THE TREATMENT OF ACUTE AND CHRONIC INFLAMMATORY DISEASES
(71) FAES FARMA, S.A., Máximo Aguirre, 14, 48940 Lamiako - Leioa - Vizcaya, ES
(72) RUBIO ROYO, Victor, Faes Farma S.A., Máximo Aguirre 14, E-48940 Lamiako (Leioa) - Vizcaya, ES;
DE LA HERA MARTÍNEZ, Antonio, Faes Farma S.A., MáximoAguirre 14, E-48940 Lamiako (Leioa) - Vizcaya, ES;
ÁLVAREZ DE MON SOTO, Melchor, Faes Farma S.A., Máximo Aguirre 14, E-48940 Lamiako (Leioa) - Vizcaya, ES;
MUAOZ MUAOZ, Ana, Faes Farma S.A., Máximo Aguirre 14, E-48940 Lamiako (Leioa) - Vizcaya, ES
(74) ABG Patentes, S.L., Avenida de Burgos 16D, Edificio Euromor, 28036 Madrid, ES

(51) (8) **EP 2303854 ***
C 07D 277/42
(30) US 20.06.2008. 74345 P
(86) PCT/US2009047469 16.06.2009.
(96) EP 09744502.7 16.06.2009. En
(87) WO2010008729 21.01.2010. 201003
(97) EP 2303854 06.04.2011. 201114 En
(54) PROCESS FOR MAKING SUBSTITUTED 2-AMINO-THIAZOLONES
(71) Amgen, Inc, One Amgen Center Drive, Thousand Oaks, California 91320-1799, US
(72) MONIZ, George A., 700 Huron Avenue, Apt. 18K, Cambridge, Massachusetts 02138, US;
FRIZZLE, Matthew J., 15 Cowper Ct., Dundas, Ontario L9H 7T3, CA;
BERNARD, Charles, 14466 Laurel Lane, Moorpark, California 91320, US;
MARTINELLI, Michael, 12860 Baywind Point, San Diego, California 92130, US;

FAUL, Margaret, 119 Via Pacifica, Newbury Park, California 91320, US;
LARROW, Jay, 5 Edmunds Place, Wakefield, Massachusetts 01880, US;
HANSEN, Karl B., 35 Pond Street, Cohasset, Massachusetts 20225, US;
KLINGENSMITH, Liane, 47 Columbia St., Stoughton, Massachusetts 02072, US
(74) Sexton, Jane Helen, J.A. Kemp & Co., 14 South Square, Gray's Inn, London WC1R 5JJ, GB

---

(51) (8) **EP 2321290 ***
C 07D 277/54
(30) US 29.07.2008. 84549 P
(86) PCT/US2009051929 28.07.2009.
(96) EP 09790875.0 28.07.2009. En
(87) WO2010014586 04.02.2010. 201005
(97) EP 2321290 18.05.2011. 201120 En
(54) ASYMMETRIC PROCESS FOR MAKING SUBSTITUTED 2-AMINO-THIAZOLONES
(71) Amgen, Inc, One Amgen Center Drive, Thousand Oaks, California 91320-1799, US
(72) CAILLE, Seb, 11521 Gentlewood Drive, Moorpark, CA 93021, US;
CUI, Sheng, 525 Village Commons Blvd., Camarillo, CA 93012, US;
WANG, Xiang, 1724 Woodside Drive, Thousand Oaks, CA 91362, US;
FAUL, Margaret, 119 Via Pacifica, Newbury Park, CA 91320, US
(74) Sexton, Jane Helen, J.A. Kemp & Co., 14 South Square, Gray's Inn, London WC1R 5JJ, GB

---

(51) (8) **EP 2318382 ***
C 07D 277/82
C 07D 471/04
A 61K 31/437
A 61P 35/00
(30) FR 18.07.2008. 0804085
FR 19.05.2009. 0902409
(86) PCT/FR2009051407 16.07.2009.
(96) EP 09737061.3 16.07.2009. Fr
(87) WO2010007317 21.01.2010. 201003
(97) EP 2318382 11.05.2011. 201119 Fr
(54) NOVEL IMIDAZO[1,2-A]PYRIDINE DERIVATIVES, METHOD FOR THE PREPARATION THEREOF, USE THEREOF AS MEDICAMENTS, PHARMACEUTICAL COMPOSITIONS AND NOVEL USE IN PARTICULAR AS MET INHIBITORS
(71) Sanofi-Aventis, 174 Avenue de France, 75013 Paris, FR
(72) DAMOUR, Dominique, c/o sanofi-aventis, Département Brevets, 174 Avenue de France, F-75013 Paris, FR;
NEMECEK, Conception, c/o sanofi-aventis, Département Brevets, 174 Avenue de France, F-75013 Paris, FR;
NEMECEK, Patrick, c/o sanofi-aventis, Département Brevets, 174 Avenue de France, F-75013 Paris, FR;
WENTZLER, Sylvie, c/o sanofi-aventis, Département Brevets, 174 Avenue de France, F-75013 Paris, FR
(74) Le Coupanec, Pascale A.M.P., et al, Nony & Associés, 3, rue de Penthivre, 75008 Paris, FR

---

(51) (8) **EP 2297120 ***
C 07D 279/06
A 61K 31/541
A 61P 25/28
(30) US 02.05.2008. 49881 P
(86) PCT/US2009040589 15.04.2009.
(96) EP 09739419.1 15.04.2009. En
(87) WO2009134617 05.11.2009. 200945
(97) EP 2297120 23.03.2011. 201112 En
(54) AMINODIHYDROTHIAZINE DERIVATIVES AS BACE INHIBITORS FOR THE TREATMENT OF ALZHEIMER'S DISEASE
(71) Eli Lilly & Company, Lilly Corporate Center, Indianapolis, IN 46285, US
(72) AUDIA, James, Edmund, Eli Lilly and Company, Lilly Corporate Center, Indianapolis, IN 46285, US;
MERGOTT, Dustin, James, Eli Lilly and Company, Lilly Corporate Center, Indianapolis, IN 46285, US;
SHEEHAN, Scott, Martin, Eli Lilly and Company, Lilly Corporate Center, Indianapolis, IN 46285, US;
WATSON, Brian, Morgan, Eli Lilly and Company, Lilly Corporate Center, Indianapolis, IN 46285, US
(74) Bassinder, Emma Marie, Eli Lilly and Company Limited, European Patent Operations, Lilly Research Centre, Erl Wood Manor, Sunninghill Road, Windlesham, Surrey GU20 6PH, GB

---

(51) (8) **EP 2307389 ***
C 07D 281/16
A 61K 31/554
A 61P 25/18
A 61P 25/24
(30) US 20.06.2008. 74417 P
(86) PCT/SE2009050763 18.06.2009.
(96) EP 09766953.5 18.06.2009. En
(87) WO2009154563 23.12.2009. 200952
(97) EP 2307389 13.04.2011. 201115 En
(54) DIBENZOTHIAZEPINE DERIVATIVES AND USE THEREOF
(71) AstraZeneca AB, 151 85 Södertälje, SE
(72) BROWN, Dean, AstraZeneca R&D Boston, 35 Gatehouse Drive, Waltham, MA 02451, US;
DAMEWOOD, James R., AstraZeneca R&D Wilmington, 1800 Concord Pike, P.O. Box 15437, Wilmington, Delaware 19850-5437, US;
EDWARDS, Phil, c/o AstraZeneca Intellectual Property, AstraZeneca R&D Wilmington, 1800 Concord Pike, P.O. Box 15437, Wilmington, Delaware 19850-5437, US;
HULSIZER, James, c/o Astrazeneca Intellectual Property, AstraZeneca R&D Wilmington, 1800 Concord Pike, P.O. Box 15437, Wilmington, Delaware 19850-5437, US;
MUIR, James Campbell, AstraZeneca, Charter Way, Macclesfield Cheshire SK10 2NA, GB;
PIERSON JR., M. Edward, AstraZeneca R&D Wilmington, 1800 Concord Pike, P.O. Box 15437, Wilmington, Delaware 19850-5437, US;
SHENVI, Ashokkumar Bhikkappa, AstraZeneca R&D Wilmington, c/o Astrazeneca Intellectual Property, 1800 Concord Pike, P.O. Box 15437, Wilmington, Delaware 19850-5437, US;
WESOLOWSKI, Steven, AstraZeneca R&D Boston, 35 Gatehouse Drive, Waltham, MA 02451, US;

WIDZOWSKI, Dan, AstraZeneca R&D Boston, 35 Gatehouse Drive, Waltham, MA 02451, US;
WOOD, Michael, AstraZeneca R&D Wilmington, 1800 Concord Pike, P.O. Box 15437, Wilmington, DE 19850-5437, US
(74) Steinrud, Henrik, et al, AstraZeneca AB, Global Intellectual Property, S-151 85 Södertälje, SE

(51) (8) **EP 2297122** *
C 07D 295/185
(30) EP 11.06.2008. 08158058
(86) PCT/EP2009057081 09.06.2009.
(96) EP 09761710.4 09.06.2009. En
(87) WO2009150147 17.12.2009. 200951
(97) EP 2297122 23.03.2011. 201112 En
(54) NEW PROCESS FOR THE PREPARATION OF LEVOCETIRIZINE AND INTERMEDIATES THEREOF
(71) KRKA, tovarna zdravil, d.d., Novo mesto, Smarjeska cesta 6, 8501 Novo mesto, SI
(72) TIHI, Jaroslav, Ulica Slavka Gruma 36, 8000 Novo mesto, SI;
PECAVAR, Anica, Gotna vas 18, Novo mesto 8000, SI;
ZUPET, Rok, Janeza Rozica 6, 1000 Ljubljana, SI;
RZEN, Janez, Kaseljska 27, 1000 Ljubljana Zalog, SI;
STROPNIK, Tadej, Rusjanov trg 10, 1000 Ljubljana, SI;
HVALEC, Miran, Seidlova 62, 8000 Novo mesto, SI;
KLOBCAR, Andrej, Vidmarjeva ulica 8, 8000 Novo mesto, SI;
BENKIC, Primoz, Masera-Spasiceva ulica 7, 1000 Ljubljana, SI;
SMODIS, Janez, Ulica Slavka Gruma 18, 8000 Novo mesto, SI;
KRASOVEC, Dusan, Krmelj 98a, 8296 Krmelj, SI
(74) UEXKÜLL & STOLBERG, Patentanwälte, Beselerstrasse 4, 22607 Hamburg, DE

(51) (8) **EP 2074108** *
C 07D 309/04
C 07D 405/12
A 61K 31/435
A 61P 9/00
(30) US 18.09.2006. 845291 P
(86) PCT/US2007020164 18.09.2007.
(96) EP 07838381.7 18.09.2007. En
(87) WO2008036247 27.03.2008. 200813
(97) EP 2074108 01.07.2009. 200927 En
(54) RENIN INHIBITORS
(71) Vitae Pharmaceuticals, Inc., 502 West Office Center Drive, Fort Washington, PA 19034, US
(72) BALDWIN, John, J., 621 Gypsy Hill Circle, Gwynedd Valley, PA 19437, US;
CLAREMON, David, A., 1508 Aidenn Lair Road, Maple Glen, PA 19002, US;
TICE, Colin, M., 1325 Pinebrook Court, Ambler, PA 19002, US;
CACATIAN, Salvacion, 89 Ramsgate Court, Blue Bell, Pennsylvania 19422, US;
DILLARD, Lawrence, W., 496 Kings Road, Yardley, PA 19067, US;
ISHCHENKO, Alexey, V., 6332 Brookview Place, Elkins Park, PA 19027, US;
YUAN, Jing, 537 Candlemaker Way, Lansdale, PA 19446, US;
XU, Zhenrong, 3855 Blair Mill Road, Apt. 235-B, Horsham, PA 19044, US;
MCGEEHAN, Gerard, 6 Martin's Court, Gamet Valley, PA 19061, US;
ZHAO, Wei, 930 Heritage Drive, Eagleville, PA 19403, US;
SIMPSON, Robert, D., 2001 N. Van Buren Street, Wilmington, DE 19802, US;
SINGH, Suresh, B., 4 Adams Road, Kendall Park, NJ 08824, US;
JIA, Lanqi, 105 Allison Road, Apt. 2A, Horsham, PA 19044, US;
FLAHERTY, Patrick, T., 3053 Windemere Avenue, Pittsburgh, PA 15216, US
(74) Bardehle, Heinz, Bardehle Pagenberg, Galileiplatz 1, 81679 München, DE

(51) (8) **EP 2313387** *
C 07D 309/32
C 07D 335/02
C 07D 405/10
C 07D 407/10
C 07D 409/10
C 07D 417/10
C 07D 493/08
A 01N 43/16
C 07C 49/603
(30) GB 11.06.2008. 0810728
(86) PCT/EP2009056874 04.06.2009.
(96) EP 09761656.9 04.06.2009. En
(87) WO2009150093 17.12.2009. 200951
(97) EP 2313387 27.04.2011. 201117 En
(54) NOVEL HERBICIDES
(71) Syngenta Participations AG, Schwarzwaldallee 215, 4058 Basel, CH;
Syngenta Limited, European Regional Centre, Priestley Road, Surrey Research Park, Guildford, Surrey GU2 7YH, GB
(72) SCUTT, James Nicholas, c/o SYNGENTA LIMITED, Jealotts Hill, International Research Center, Bracknell, Berkshire RG42 6EY, GB;
MATHEWS, Christopher John, c/o SYNGENTA LIMITED, Jeallotts Hill, International Research Center, Bracknell, Berkshire RG42 6EY, GB;
MUEHLEBACH, Michel, c/o SYNGENTA CROP PROTECTION, Münchwilen AG, Schaffhauserstrasse, CH-4332 Stein, CH
(74) Breen, Anthony Paul, et al, Syngenta Limited, Intellectual Property Department, PO Box 3538, Jealott's Hill International Research Centre, Bracknell, Berkshire RG42 6YA, GB

(51) (8) **EP 2313388** *
C 07D 309/32
C 07D 335/02
C 07D 405/10
C 07D 407/10
C 07D 409/10
C 07D 417/10
C 07D 493/08
C 07C 49/603
A 01N 43/16
(30) GB 12.06.2008. 0810815
(86) PCT/EP2009056876 04.06.2009.
(96) EP 09761657.7 04.06.2009. En
(87) WO2009150094 17.12.2009. 200951

(97) EP 2313388 27.04.2011. 201117 En
(54) NOVEL HERBICIDES
(71) Syngenta Limited, European Regional Centre, Priestley Road, Surrey Research Park, Guildford, Surrey GU2 7YH, GB
(72) SCUTT, James Nicholas, c/o SYNGENTA LIMITED, Jealotts Hill, International Research Center, Bracknell, Berkshire RG42 6EY, GB;
MATHEWS, Christopher John, c/o SYNGENTA LIMITED, Jeallotts Hill, International Research Center, Bracknell, Berkshire RG42 6EY, GB
(74) Breen, Anthony Paul, et al, Syngenta Limited, Intellectual Property Department, PO Box 3538, Jealott's Hill International Research Centre, Bracknell, Berkshire RG42 6YA, GB

(51) (8) **EP 2307397** *
C 07D 311/04
C 07D 405/12
C 07D 407/12
A 61K 31/353
A 61P 29/00
(30) US 25.06.2008. 75615 P
(86) PCT/US2009048499 24.06.2009.
(96) EP 09770959.6 24.06.2009. En
(87) WO2009158426 30.12.2009. 200953
(97) EP 2307397 13.04.2011. 201115 En
(54) 6-SUBSTITUTED PHENOXYCHROMAN CARBOXYLIC ACID DERIVATIVES
(71) Array Biopharma, Inc., 3200 Walnut Street, Boulder, CO 80301, US
(72) BURGESS, Laurence, E., C/o Array Biopharma Inc., 3200 Walnut Street, Boulder, CO 80301, US;
CLARK, Christopher, T., c/o Array Biopharma Inc., 3200 Walnut Street, Boulder, CO 80301, US;
COOK, Adam, c/o Array Biopharma Inc., 3200 Walnut Street, Boulder, CO 80301, US;
CORRETTE, Christopher, P., c/o Array Biopharma Inc., 3200 Walnut Street, Boulder, CO 80301, US;
DELISLE, Robert, Kirk, c/o Array Biopharma Inc., 3200 Walnut Street, Boulder, CO 80301, US;
DOHERTY, George, A., c/o Array Biopharma Inc., 3200 Walnut Street, Boulder, CO 80301, US;
HUNT, Kevin, W., c/o Array Biopharma Inc., 3200 Walnut Street, Boulder, CO 80301, US;
ROMOFF, Todd, c/o Array Biopharma Inc., 3200 Walnut Street, Boulder, CO 80301, US;
KIM, Ganghyeok, C/o Array Biopharma Inc., 3200 Walnut Street, Boulder, CO 80301, US
(74) Office Freylinger, P.O. Box 48, L-8001 Strassen, LU

(51) (8) **EP 2298755**
C 07D 317/72
C 07C 67/31
C 07C 67/343
C 07C 69/675
C 07C 69/738
C 07C 69/757
C 12P 7/62
A 61P 43/00
(30) JP 21.05.2008. 2008133056
(86) PCT/JP2009059156 19.05.2009.
(96) EP 09750546.5 19.05.2009. Ja
(87) WO2009142184 26.11.2009. 200948
(97) EP 2298755 23.03.2011. 201112 En
(54) METHOD OF PRODUCING BICYCLO[3.1.0]HEXANE DERIVATIVE USING ENZYME
(71) Taisho Pharmaceutical Co., Ltd., 24-1 Takata 3-chome, Toshima-ku, Tokyo 170-8633, JP
(72) HIROTSUKA, Mitsuaki, c/o TAISHO PHARMACEUTICAL CO. LTD., 24-1 Takada 3-chome, Toshima-ku, Tokyo 170-8633, JP;
SASAKI, Joji, c/o TAISHO PHARMACEUTICAL CO. LTD., 24-1 Takada 3-chome, Toshima-ku, Tokyo 170-8633, JP;
KAMIYAMA, Hiroaki, c/o TAISHO PHARMACEUTICAL CO. LTD., 24-1 Takada 3-chome, Toshima-ku, Tokyo 170-8633, JP;
OSHIDA, Motoko, c/o TAISHO PHARMACEUTICAL CO. LTD., 24-1 Takada 3-chome, Toshima-ku, Tokyo 170-8633, JP;
ISHII, Takaaki, c/o TAISHO PHARMACEUTICAL CO. LTD., 24-1 Takada 3-chome, Toshima-ku, Tokyo 170-8633, JP
(74) HOFFMANN EITLE, Patent- und Rechtsanwälte, Arabellastraße 4, 81925 München, DE

(51) (8) **EP 2319840**
C 07D 333/78
A 61K 31/381
A 61K 31/4025
A 61K 31/4535
A 61K 31/496
A 61K 31/5377
A 61K 31/54
A 61P 11/06
A 61P 29/00
A 61P 37/08
A 61P 43/00
(30) JP 01.08.2008. 2008199648
JP 27.05.2009. 2009127385
(86) PCT/JP2009063645 31.07.2009.
(96) EP 09803043.0 31.07.2009. Ja
(87) WO2010013805 04.02.2010. 201005
(97) EP 2319840 11.05.2011. 201119 En
(54) AMINOPROPYLIDENE DERIVATIVE
(71) Nippon Zoki Pharmaceutical Co., Ltd., 1-2 Hiranomachi 2-chome, Chuo-ku, Osaka-shi, Osaka 541-0046, JP
(72) HIGASHIURA, Kunihiko, c/o NIPPON ZOKI PHARMACEUTICAL CO. LTD., Institute of Bio-Active Science, 442-1 Kawakitayama, Kinashi, Kato-shi, Hyogo 673-1461, JP;
OGINO, Takashi, c/o NIPPON ZOKI PHARMACEUTICAL CO. LTD., Institute of Bio-Active Science, 442-1 Kawakitayama, Kinashi, Kato-shi, Hyogo 673-1461, JP;
ITO, Taizo, c/o NIPPON ZOKI PHARMACEUTICAL CO. LTD., Institute of Bio-Active Science, 442-1 Kawakitayama, Kinashi, Kato-shi, Hyogo 673-1461, JP;
KUNIMASU, Koji, c/o NIPPON ZOKI PHARMACEUTICAL CO. LTD., Institute of Bio-Active Science, 442-1 Kawakitayama, Kinashi, Kato-shi, Hyogo 673-1461, JP;
FURUKAWA, Kazuhito, c/o NIPPON ZOKI PHARMACEUTICAL CO. LTD., Institute of Bio-Active Science, 442-1 Kawakitayama, Kinashi, Kato-shi, Hyogo 673-1461, JP
(74) HOFFMANN EITLE, Patent- und Rechtsanwälte, Arabellastraße 4, 81925 München, DE

(51) (8) **EP 2069324 ***
C 07D 401/00
(30) US 20.03.2007. 895921 P
US 20.12.2007. 15288
(86) PCT/US2008056396 10.03.2008.
(96) EP 08743755.4 10.03.2008. En
(87) WO2008115719 25.09.2008. 200839
(97) EP 2069324 17.06.2009. 200925 En
(54) FUSED AMINO PYRIDINE AS HSP90 INHIBITORS
(71) Curis, Inc., 4 Maguire Road, Lexington, MA 02421, US
(72) CAI, Xiong, 26 Concord Ave., Belmont, MA 02478, US;
QIAN, Changgeng, 163 Old Connecticut Path, Wayland, MA 01778, US;
ZHAI, Haixiao, 283 South Road, Bedford, MA 01730, US
(74) Stevens, Ian Edward, Potter Clarkson LLP, Park View House, 58 The Ropewalk, Nottingham, NG1 5DD, GB

(51) (8) **EP 2300452 ***
C 07D 401/04
A 61K 31/44
A 61P 25/00
(30) GB 14.05.2008. 0808747
(86) PCT/EP2009055700 12.05.2009.
(96) EP 09745725.3 12.05.2009. En
(87) WO2009138393 19.11.2009. 200947
(97) EP 2300452 30.03.2011. 201113 En
(54) 5-[5-[2-(3,5-BIS(TRIFLUOROMETHYL)PHENYL)-2-METHYLPROPANOYLMETHYLAMINO]-4-(4-FLUORO-2-METHYLPHENYL)]-2-PYRIDINYL-2-ALKYL-PROLINAMIDE AS NK1 RECEPTOR ANTAGONISTS
(71) Glaxo Wellcome Manufacturing Pte Ltd, 1 Pioneer Sector 1, Jurong 628413, SG
(72) ALVARO, Giuseppe, GlaxoSmithKline, via Alessandro Fleming 2, I-37135 Verona, IT;
MARASCO, Agostino, GlaxoSmithKline, via Alessandro Fleming 2, I-37135 Verona, IT
(74) Pezzoli, Anna, GlaxoSmithKline, 980 Great West Road, Brentford, Middlesex, TW8 9GS, GB

(51) (8) **EP 2307400 ***
C 07D 401/04
C 07D 401/14
C 07D 471/04
A 61K 31/498
A 61K 31/502
A 61K 31/4709
A 61P 35/00
(30) US 30.05.2008. 57745
(86) PCT/US2009045713 29.05.2009.
(96) EP 09767432.9 29.05.2009. En
(87) WO2009155121 23.12.2009. 200952
(97) EP 2307400 13.04.2011. 201115 En
(54) INHIBITORS OF PI3 KINASE
(71) Amgen, Inc, One Amgen Center Drive, Thousand Oaks, California 91320-1799, US
(72) BO, Yunxin Y., 419 Calle Veracruz, Thousand Oaks, CA 91320, US;
BOOKER, Shon, 71 McAfee Court, Thousand Oaks, CA 91360, US;
BRYAN, Marian, 24001 Victory Blvd., West Hills, CA 91307, US;
DEAK, Holly L., 124 Park Street Apt. 3, Brookline, MA 02446, US;
LIU, Longbin, 753 Rushing Creek Place, Thousand Oaks, CA 91360, US;
ANDREWS, Kristin, 3154 Foxtail Court, Thousand Oaks, CA 91362, US;
NISHIMURA, Nobuko, 24050 Arminta Street, West Hills, CA 91304, US;
NORMAN, Mark H., 130 Venus Street, Thousand Oaks, CA 91360, US;
PANTER, Kathleen, 80 Porter Road Apt. 44, Cambridge, MA 02140, US;
SCHENKEL, Laurie, 4 Longfellow Place Apt. 3106, Boston, MA 02114, US;
SIEGMUND, Aaron C., 311 Mariposa Drive, Ventura, CA 93011, US;
TAMAYO, Nuria A., 4394 Camino De La Rosa, Newbury Park, CA 91320, US;
YANG, Kevin, 8871 Camino Real Avenue, San Gabriel, CA 91775, US
(74) Grünecker, Kinkeldey, Stockmair & Schwanhäusser, Anwaltssozietät, Leopoldstrasse 4, 80802 München, DE

(51) (8) **EP 2313391 ***
C 07D 401/04
C 07D 401/14
C 07D 403/04
C 07D 409/04
C 07D 413/04
C 07D 417/04
A 61K 31/4725
A 61P 25/18
(30) DK 23.06.2008. 200800859
US 23.06.2008. 74740 P
(86) PCT/EP2009057660 19.06.2009.
(96) EP 09769188.5 19.06.2009. En
(87) WO2009156339 30.12.2009. 200953
(97) EP 2313391 27.04.2011. 201117 En
(54) ISOQUINOLINONE DERIVATIVES AS NK3 ANTAGONISTS
(71) H. Lundbeck A/S, Ottiliavej 9, 2500 Valby, DK
(72) KHANZHIN, Nikolay, Teglgårdsvej 545, 2. tv, DK-3050 Humlebæk, DK;
JUHL, Karsten, Brydeholm 56, DK-2670 Greve, DK;
NIELSEN, Søren, Møller, Zmosevej 15, DK-3400 Hillerød, DK;
SIMONSEN, Klaus, Bæk, Læssøegade 75, DK-5230 Odense M, DK

(51) (8) **EP 2321295 ***
C 07D 401/04
C 07D 487/04
A 61K 31/53
A 61P 25/28
A 61P 3/10
A 61P 35/00
A 61P 33/06
(30) EP 26.06.2008. 08290617
(86) PCT/IB2009006463 25.06.2009.
(96) EP 09769671.0 25.06.2009. En
(87) WO2009156860 30.12.2009. 200953
(97) EP 2321295 18.05.2011. 201120 En

(54) 4-(PYRIDIN-4-YL)-1H-[1,3,5]TRIAZIN-2-ONE DERIVATIVES AS GSK3-BETA INHIBITORS FOR THE TREATMENT OF NEURODEGENERATIVE DISEASES
(71) Mitsubishi Tanabe Pharma Corporation, 2-6-18, Kitahama Chuo-ku 3-chome, Osaka-shi, Osaka 541-8505, JP;
Sanofi-Aventis, 174 Avenue de France, 75013 Paris, FR
(72) LOCHEAD, Alistair, Patent Department, c/o sanofi-aventis, 174 avenue de France, F-75013 Paris, FR;
SAADY, Mourad, Patent Department, c/o sanofi-aventis, 174 avenue de France, F-75013 Paris, FR;
YAICHE, Philippe, Patent Department, c/o sanofi-aventis, 174 avenue de France, F-75013 Paris, FR
(74) Tinel, Marie-Line, et al, Sanofi-Aventis, Département Brevets, 174, avenue de France, F-75013 Paris, FR

(51) (8) **EP 2297131 ***
C 07D 401/10
C 07D 413/10
C 07D 215/227
C 07D 417/10
C 07D 295/02
C 07D 407/10
A 61K 31/47
A 61K 31/4427
A 61P 3/10
A 61P 15/00
A 61P 25/00
(30) US 25.06.2008. 75599 P
US 18.12.2008. 138856 P
(86) PCT/US2009048608 25.06.2009.
(96) EP 09770999.2 25.06.2009. En
(87) WO2009158467 30.12.2009. 200953
(97) EP 2297131 23.03.2011. 201112 En
(54) DI-SUBSTITUTED PHENYL COMPOUNDS AS PHOSPHODIESTERASE 10 INHIBITORS
(71) Envivo Pharmaceuticals, Inc., 480 Arsenal Street, Bldg. 1, Watertown, MA 02472, US
(72) CHESWORTH, Richard, 88 Kingston Street, Unit 5F, Boston, MA 02111, US;
SHAPIRO, Gideon, 5507 NW 80th Avenue, Gainsville, FL 32653, US;
RIPKA, Amy, 1446 Main Street, Reading, MA 01867, US
(74) Harrison Goddard Foote, 4th Floor, Merchant Exchange, 17-19 Whitworth Street West, Manchester M1 5WG, GB

(51) (8) **EP 2300455 ***
C 07D 401/10
C 07D 487/04
C 07D 253/07
A 61K 31/53
A 61P 35/00
(30) US 21.05.2008. 54995 P
(86) PCT/US2009044622 20.05.2009.
(96) EP 09751439.2 20.05.2009. En
(87) WO2009143211 26.11.2009. 200948
(97) EP 2300455 30.03.2011. 201113 En
(54) SALTS OF 2-FLUORO-N-METHYL-4-[7-(QUINOLIN-6-YL-METHYL) - IMIDAZO [1, 2-B] [1, 2, 4] TRIAZIN-2-YL] BENZAMIDE AND PROCESSES RELATED TO PREPARING THE SAME
(71) Incyte Corporation, Experimental Station, Route 141 & Henry Clay Road, Building E336, Wilmington, DE 19880, US
(72) WENG, Lingkai, 28 Landmark Drive, Malvern, PA 19355, US;
QIAO, Lei, 1376 Stonegate Drive, Downingtown, PA 19335, US;
ZHOU, Jiacheng, 46 Bay Boulevard, Newark, DE 19702, US;
LIU, Pingli, 205 Pilot Court, Newark, DE 19702, US;
PAN, Yongchun, 11 Capano Drive, Apt. B6, Newark, DE 19702, US
(74) Clyde-Watson, Zöe, et al, D Young & Co LLP, 120 Holborn, London EC1N 2DY, GB

(51) (8) **EP 2114920 ***
C 07D 401/12
C 07D 401/14
C 07D 409/14
A 61K 31/4725
A 61P 9/00
(30) EP 27.12.2006. 06026896
(86) PCT/EP2007011165 19.12.2007.
(96) EP 07856888.8 19.12.2007. En
(87) WO2008077552 03.07.2008. 200827
(97) EP 2114920 11.11.2009. 200946 En
(54) SUBSTITUTED ISOQUINOLINE AND ISOQUINOLINONE DERIVATIVES
(71) Sanofi-Aventis, 174 Avenue de France, 75013 Paris, FR
(72) PLETTENBURG, Oliver, Sanofi-Aventis Deutschland GmbH, 65926 Frankfurt am Main, DE;
HOFMEISTER, Armin, Sanofi-Aventis Deutschland GmbH, 65926 Frankfurt am Main, DE;
GOERLITZER, Jochen, Sanofi-Aventis Deutschland GmbH, 65926 Frankfurt am Main, DE;
LÖHN, Matthias, Sanofi-Aventis Deutschland GmbH, 65926 Frankfurt am Main, DE
(74) Löschner, Thomas, Sanofi-Aventis Deutschland GmbH, Patent- und Lizenzabteilung, Industriepark Höchst, Gebäude K 801, Raum 5041, D-65926 Frankfurt am Main, DE

(51) (8) **EP 2297133 ***
C 07D 401/12
C 07D 401/14
C 07D 405/12
C 07D 413/14
C 07D 417/14
A 61K 31/4409
A 61K 31/5355
A 61P 25/18
(30) US 25.06.2008. 75594
US 28.10.2008. 109162
US 18.12.2008. 138866
US 07.05.2009. 176413
(86) PCT/US2009048426 24.06.2009.
(96) EP 09770926.5 24.06.2009. En
(87) WO2009158393 30.12.2009. 200953
(97) EP 2297133 23.03.2011. 201112 En
(54) 1, 2 DISUBSTITUTED HETEROCYCLIC COMPOUNDS
(71) Envivo Pharmaceuticals, Inc., 480 Arsenal Street, Bldg. 1, Watertown, MA 02472, US
(72) RIPKA, Amy, 1446 Main Street, Reading, MA 01867, US;
SHAPIRO, Gideon, 5507 NW 80th Avenue, Gainsville, FL 32653, US;
CHESWORTH, Richard, 88 Kingston Street, Unit 5F, Boston, MA 02111, US

(74) Harrison Goddard Foote, 4th Floor, Merchant Exchange, 17-19 Whitworth Street West, Manchester, M1 5WG, GB

(51) (8) **EP 2300457 ***
C 07D 401/12
A 61K 31/4439
A 61P 35/00
(30) US 10.10.2008. 104618 P
US 11.06.2008. 60752 P
(86) PCT/US2009003493 10.06.2009.
(96) EP 09762895.2 10.06.2009. En
(87) WO2009151599 17.12.2009. 200951
(97) EP 2300457 30.03.2011. 201113 En
(54) SUBSTITUTED PYRROLES AND METHODS OF USE
(71) Genentech, Inc., 1 DNA Way, South San Francisco, CA 94080, US
(72) GAZZARD, Lewis, J., 2552 Belmont Canyon Road, Belmont, CA 94002, US;
LYSSIKATOS, Joseph, P., 42 Alta Ave., Piedmont, CA 94611, US
(74) Kiddle, Simon John, et al, Mewburn Ellis LLP, 33 Gutter Lane, London, EC2V 8AS, GB

(51) (8) **EP 2303861 ***
C 07D 401/12
C 07D 401/14
C 07D 405/14
C 07D 413/14
A 61K 31/4439
A 61P 35/00
(30) US 17.06.2008. 73055 P
(86) PCT/GB2009050675 15.06.2009.
(96) EP 09766150.8 15.06.2009. En
(87) WO2009153589 23.12.2009. 200952
(97) EP 2303861 06.04.2011. 201114 En
(54) PYRIDINE COMPOUNDS
(71) AstraZeneca AB, 151 85 Södertälje, SE
(72) BARLAAM, Bernard, Christophe, AstraZeneca Pharma, Z.I. La Pompelle, BP 1050, F-51689 Reims Cedex 2, FR;
FOOTE, Kevin, Michael, AstraZeneca R&D Alderley, Alderley Park, Macclesfield, Cheshire SK10 4TG, GB;
PLE, Patrick, AstraZeneca Pharma, Z.I. La Pompelle, BP 1050, F-51689 Reims Cedex 2, FR;
JONES, Clifford, David, c/o AstraZeneca R&D Alderley, Alderley Park, Macclesfield, Cheshire SK10 4TG, GB
(74) Gairns, Raymond Stevenson, et al, AstraZeneca Intellectual Property, AstraZeneca AB, 151 85 Sodertalje, SE

(51) (8) **EP 2303863 ***
C 07D 401/12
C 07D 401/14
C 07D 405/12
C 07D 405/14
C 07D 413/14
A 61K 31/4409
A 61K 31/5355
A 61K 31/47
A 61P 25/18
(30) US 25.06.2008. 75594
US 28.10.2008. 109162
US 18.12.2008. 138866
US 07.05.2009. 176413
(86) PCT/US2009048617 25.06.2009.
(96) EP 09771005.7 25.06.2009. En
(87) WO2009158473 30.12.2009. 200953
(97) EP 2303863 06.04.2011. 201114 En
(54) 5- AND 6-MEMBERED HETEROCYCLIC COMPOUNDS
(71) Envivo Pharmaceuticals, Inc., 480 Arsenal Street, Bldg. 1, Watertown, MA 02472, US
(72) RIPKA, Amy, 1446 Main Street, Reading, MA 01867, US;
SHAPIRO, Gideon, 5507 Nw 80th Avenue, Gainsville, FL 32653, US;
CHESWORTH, Richard, 88 Kingston Street, Unit 5F, Boston, MA 02111, US
(74) Harrison Goddard Foote, 4th Floor, Merchant Exchange, 17-19 Whitworth Street West, Manchester, M1 5WG, GB

(51) (8) **EP 2303866 ***
C 07D 401/12
A 61K 31/4439
(30) SI 23.06.2008. 200800161
(86) PCT/EP2009057846 23.06.2009.
(96) EP 09779911.8 23.06.2009. En
(87) WO2010006904 21.01.2010. 201003
(97) EP 2303866 06.04.2011. 201114 En
(54) CRYSTALLINE FORMS OF RABEPRAZOLE SODIUM
(71) Krka Tovarna Zdravil, D.D., Novo Mesto, Smarjeska cesta 6, 8501 Novo Mesto, SI
(72) KOTAR-JORDAN, Berta, Vodeniska 19, 8311 Kostanjevica na Krki, SI;
VRECER, Franc, Potok 5b, 8531 Straza pri Novem mestu, SI;
ZADNIK, Jernej, Pionirska cesta 4, 8350 Dolenjske Toplice, SI;
URSKA, Turk, Slavka Gruma 66, 8000 Novo Mesto, SI;
KOVACIC, Borut, Stegne 30, 1251 Moravce, SI
(74) UEXKÜLL & STOLBERG, Patentanwälte, Beselerstrasse 4, 22607 Hamburg, DE

(51) (8) **EP 2307401 ***
C 07D 401/12
C 07D 401/14
C 07D 407/14
C 07D 471/04
A 61K 31/519
A 61K 31/4709
A 61K 31/4375
A 61P 35/00
C 07D 215/56
C 07D 213/82
C 07D 213/40
(30) FR 08.07.2008. 0803863
(86) PCT/FR2009051322 06.07.2009.
(96) EP 09784468.2 06.07.2009. Fr
(87) WO2010004198 14.01.2010. 201002
(97) EP 2307401 13.04.2011. 201115 Fr
(54) ANTINEOPLASTIC DERIVATIVES OF 4-OXO-1,4-DIHYDRO-QUINOLINE, PREPARATION THEREOF, AND THERAPEUTIC USE THEREOF
(71) Sanofi-Aventis, 174 Avenue de France, 75013 Paris, FR
(72) BERNHART, Claude, c/o sanofi-aventis, Département Brevets, 174 avenue de France, F-75013 Paris, FR;

BOUABOULA, Monsif, c/o sanofi-aventis, Département Brevets, 174 avenue de France, F-75013 Paris, FR;
CASELLAS, Pierre, c/o sanofi-aventis, Département Brevets, 174 avenue de France, F-75013 Paris, FR;
DUCLOS, Olivier, c/o sanofi-aventis, Département Brevets, 174 avenue de France, F-75013 Paris, FR;
HERBERT, Jean Marc, c/o sanofi-aventis, Département Brevets, 174 avenue de France, F-75013 Paris, FR;
JEGHAM, Samir, c/o sanofi-aventis, Département Brevets, 174 avenue de France, F-75013 Paris, FR;
MCCORT, Gary, c/o sanofi-aventis, Département Brevets, 174 avenue de France, F-75013 Paris, FR
(74) Gaslonde, Aude, et al, Sanofi-Aventis, Département Brevets, 174, Avenue de France, 75013 Paris, FR

(51) (8) **EP 2310382 ***
C 07D 401/12
C 07D 401/14
C 07D 403/12
C 07D 403/14
C 07D 405/14
A 61K 31/4412
A 61P 35/00
(30) US 24.07.2008. 83294 P
US 31.07.2008. 85082 P
US 27.10.2008. 108659 P
(86) PCT/US2009050640 15.07.2009.
(96) EP 09790440.3 15.07.2009. En
(87) WO2010011538 28.01.2010. 201004
(97) EP 2310382 20.04.2011. 201116 En
(54) AMIDOPHENOXYINDAZOLES USEFUL AS INHIBITORS OF C-MET
(71) Eli Lilly & Company, Lilly Corporate Center, Indianapolis, IN 46285, US
(72) LI, Tiechao, Eli Lilly and Company, Lilly Corporate Center, Indianapolis, Indiana 46285, US;
POBANZ, Mark, Andrew, 4293 Sedge Court, Zionsville, Indiana 46077, US;
SHIH, Chuan, Eli Lilly and Company, Lilly Corporate Center, Indianapolis, Indiana 46285, US;
WU, Zhipei, Eli Lilly and Company, Lilly Corporate Center, Indianapolis, Indiana 46285, US;
YANG, Wei Jennifer, Eli Lilly and Company, Lilly Corporate Center, Indianapolis, Indiana 46285, US;
ZHONG, Boyu, Eli Lilly and Company, Lilly Corporate Center, Indianapolis, Indiana 46285, US
(74) Smith, Andrew George, Eli Lilly and Company Limited, Lilly Research Centre, Erl Wood Manor, Sunninghill Road, Windlesham, Surrey GU20 6PH, GB

(51) (8) **EP 2313392 ***
C 07D 401/12
C 07D 403/12
C 07D 409/12
A 61K 31/40
A 61P 1/00
A 61P 11/00
A 61P 25/00
(30) FR 14.08.2008. 0804596
(86) PCT/FR2009001004 13.08.2009.
(96) EP 09736249.5 13.08.2009. Fr
(87) WO2010018329 18.02.2010. 201007
(97) EP 2313392 27.04.2011. 201117 Fr
(54) AZETIDINE POLYSUBSTITUTED COMPOUNDS, PREPARATION THEREOF, AND THERAPEUTIC APPLICATION THEREOF
(71) Sanofi-Aventis, 174 Avenue de France, 75013 Paris, FR
(72) AUGER, Florian, c/o Sanofi-aventis, Département Brevets, 174 avenue de France, F-75013 Paris, FR;
BERNARDELLI, Patrick, c/o Sanofi-aventis, Département Brevets, 174 avenue de France, F-75013 Paris, FR;
SABUCO, Jean-François, c/o Sanofi-aventis, Département Brevets, 174 avenue de France, F-75013 Paris, FR;
TERRIER, Corinne, c/o Sanofi-aventis, Département Brevets, 174 avenue de France, F-75013 Paris, FR
(74) Tinel, Marie-Line, et al, Sanofi-Aventis, Département Brevets, 174, avenue de France, F-75013 Paris, FR

(51) (8) **EP 2313393 ***
C 07D 401/12
C 07D 403/12
C 07D 413/12
C 07D 417/12
A 61K 31/40
A 61P 1/00
A 61P 11/00
A 61P 25/00
(30) FR 14.08.2008. 0804595
(86) PCT/FR2009001003 13.08.2009.
(96) EP 09737012.6 13.08.2009. Fr
(87) WO2010018328 18.02.2010. 201007
(97) EP 2313393 27.04.2011. 201117 Fr
(54) AZETIDINE POLYSUBSTITUTED COMPOUNDS, PREPARATION THEREOF, AND THERAPEUTIC APPLICATION THEREOF
(71) Sanofi-Aventis, 174 Avenue de France, 75013 Paris, FR
(72) BERNARDELLI, Patrick, c/o Sanofi-aventis, Département Brevets, 174 avenue de France, F-75013 Paris, FR;
SABUCO, Jean-François, c/o Sanofi-aventis, Département Brevets, 174 avenue de France, F-75013 Paris, FR;
TERRIER, Corinne, c/o Sanofi-aventis, Département Brevets, 174 avenue de France, F-75013 Paris, FR
(74) Tinel, Marie-Line, et al, Sanofi-Aventis, Département Brevets, 174, avenue de France, F-75013 Paris, FR

(51) (8) **EP 2315763 ***
C 07D 401/12
C 07D 401/14
C 07D 403/12
C 07D 403/14
C 07D 405/12
C 07D 405/14
C 07D 413/12
C 07D 413/14
C 07D 417/12
C 07D 417/14
C 07D 471/04
C 07D 471/08
C 07D 513/04
A 61K 31/4184
A 61K 31/437
(30) US 03.07.2008. 133938
(86) PCT/US2009049498 02.07.2009.
(96) EP 09774497.3 02.07.2009. En
(87) WO2010003048 07.01.2010. 201001

(97) EP 2315763 04.05.2011. 201118 En
(54) BENZIMIDAZOLES AND RELATED ANALOGS AS SIRTUIN MODULATORS
(71) Sirtris Pharmaceuticals, Inc., 200 Technology Square, Suite 300, Cambridge, MA 02139, US
(72) VU, Chi, B., 200 Technology Square, Suite 300, Cambridge, MA 02139, US;
DISCH, Jeremy, S., 200 Technology Square, Suite 300, Cambridge, MA 02139, US;
NG, Pui, Yee, 200 Technology Square, Suite 300, Cambridge, MA 02139, US;
BLUM, Charles, A., 200 Technology Square, Suite 300, Cambridge, MA 02139, US;
PERNI, Robert, B., 200 Technology Square, Suite 300, Cambridge, MA 02139, US
(74) Learoyd, Stephanie Anne, et al, GlaxoSmithKline, Corporate Intellectual Property (CN9.25.1), 980 Great West Road, Brentford, Middlesex TW8 9GS, GB

(51) (8) **EP 2318389 ***
C 07D 401/12
C 07D 401/14
C 07D 403/12
C 07D 413/14
C 07D 471/04
A 61K 31/501
A 61K 31/506
A 61P 35/00
(30) US 18.07.2008. 81900 P
(86) PCT/EP2009059138 16.07.2009.
(96) EP 09780696.2 16.07.2009. En
(87) WO2010007120 21.01.2010. 201003
(97) EP 2318389 11.05.2011. 201119 En
(54) PYRIDAZINE DERIVATIVES AS SMO INHIBITORS
(71) Novartis AG, Lichtstrasse 35, 4056 Basel, CH
(72) HE, Feng, China Novartis Institutes for, BioMedical Research Co. Ltd., No. 8 Building, Lane 898 Halei Road, Zhangjiang Hi-Tech Park, Pudong New Area Shanghai 201203, CN;
PEUKERT, Stefan, Novartis Institutes for BioMedical Research Inc., 250 Massachusetts Avenue, Cambridge, Massachusetts 02139, US;
MILLER-MOSLIN, Karen, Novartis Institutes for BioMedical Research Inc., 250 Massachusetts Avenue, Cambridge, Massachusetts 02139, US;
YUSUFF, Naeem, Novartis Institutes for BioMedical Research Inc., 250 Massachusetts Avenue, Cambridge, Massachusetts 02139, US;
CHEN, Zhuoliang, Novartis Institutes for BioMedical Research Inc., 250 Massachusetts Avenue, Cambridge, Massachusetts 02139, US;
LAGU, Bharat, Novartis Institutes for BioMedical Research Inc., 250 Massachusetts Avenue, Cambridge, Massachusetts 02139, US
(74) Dyer, James, et al, Novartis AG, Patent Department, 4002 Basel, CH

(51) (8) **EP 2321298 ***
C 07D 401/12
C 07D 403/12
C 07D 403/14
A 61K 31/506
A 61P 35/00
(30) US 04.08.2008. 86107 P
(86) PCT/US2009052759 04.08.2009.
(96) EP 09740559.1 04.08.2009. En
(87) WO2010017240 11.02.2010. 201006
(97) EP 2321298 18.05.2011. 201120 En
(54) AURORA KINASE MODULATORS AND METHODS OF USE
(71) Amgen Inc., One Amgen Center Drive, Thousand Oaks, CA 93012, US
(72) DEAK, Holly L., 124 Park Street Apt. 3, Brookline, Massachusetts 02446, US;
GEUNS-MEYER, Stephanie D., 54 Whitney Road, Medford, Massachusetts 02155, US;
HUMAN, Jason B., 901 Beacon Street Apt. 5, Boston, Massachusetts 02215, US;
MARTIN, Mathew, 30 Cambridge Park Drive Apt. 3115, Cambridge, Massachusetts 02140, US;
MARX, Isaac, 12 Evergreen Square Apt. 1, Somerville, Massachusetts 02143, US
(74) Grünecker, Kinkeldey, Stockmair & Schwanhäusser, Anwaltssozietät, Leopoldstrasse 4, 80802 München, DE

(51) (8) **EP 2308869**
C 07D 401/14
A 61P 25/04
A 61P 43/00
C 07D 413/14
C 07D 417/14
A 61K 31/4545
(30) JP 14.07.2008. 2008182251
(86) PCT/JP2009062680 13.07.2009.
(96) EP 09797891.0 13.07.2009. Ja
(87) WO2010007966 21.01.2010. 201003
(97) EP 2308869 13.04.2011. 201115 En
(54) AZOLE COMPOUND
(71) Astellas Pharma Inc., 3-11, Nihonbashi-Honcho 2-chome, Chuo-ku, Tokyo 103-8411, JP
(72) AOKI, Satoshi, c/o Astellas Pharma Inc., 3-11, Nihonbashi-Honcho 2-chome, Chuo-ku, Tokyo 103-8411, JP;
MUNAKATA, Ryosuke, c/o Astellas Pharma Inc., 3-11, Nihonbashi-Honcho 2-chome, Chuo-ku, Tokyo 103-8411, JP;
KAWANO, Noriyuki, c/o Astellas Pharma Inc., 3-11, Nihonbashi-Honcho 2-chome, Chuo-ku, Tokyo 103-8411, JP;
SAMIZU, Kiyohiro, c/o Astellas Pharma Inc., 3-11, Nihonbashi-Honcho 2-chome, Chuo-ku, Tokyo 103-8411, JP;
OKA, Hiromasa, c/o Astellas Pharma Inc., 3-11, Nihonbashi-Honcho 2-chome, Chuo-ku, Tokyo 103-8411, JP;
ISHII, Takahiro, c/o Astellas Pharma Inc., 3-11, Nihonbashi-Honcho 2-chome, Chuo-ku, Tokyo 103-8411, JP;
SUGANE, Takashi, c/o Astellas Pharma Inc., 3-11, Nihonbashi-Honcho 2-chome, Chuo-ku, Tokyo 103-8411, JP
(74) HOFFMANN EITLE, Patent- und Rechtsanwälte, Arabellastraße 4, 81925 München, DE

(51) (8) **EP 2318390 ***
C 07D 401/14
A 61K 31/444
(30) JP 27.08.2008. 2008218851
JP 17.10.2008. 2008269099
(86) PCT/JP2009065279 26.08.2009.
(96) EP 09788053.8 26.08.2009. En
(87) WO2010024451 04.03.2010. 201009
(97) EP 2318390 11.05.2011. 201119 En
(54) PYRROLE COMPOUNDS
(71) Takeda Pharmaceutical Company Limited, 1-1 Doshomachi 4-chome, Chuo-ku, Osaka-shi, Osaka 541-0045, JP
(72) NISHIDA, Haruyuki, c/o TAKEDA PHARMACEUTICAL COMPANY LIMITED, 17-85, Jusohonmachi 2-chome, Yodogawa-ku, Osaka-shi, Osaka 532-8686, JP;
ARIKAWA, Yasuyoshi, c/o Takeda Pharmaceutical Company Limited, 17-85, Jusohonmachi 2-chome, Yodagawa-ku, Osaka-shi, Osaka 532-8686, JP;
FUJIMORI, Ikuo, c/o TAKEDA PHARMACEUTICAL COMPANY LIMITED, 17-85, Jusohonmachi 2-chome, Yodogawa-ku, Osaka-shi, Osaka 532-8686, JP
(74) Jones, Nicholas Andrew, et al, Withers & Rogers LLP, Goldings House, 2 Hays Lane, London, SE1 2HW, GB

(51) (8) **EP 2318392 ***
C 07D 401/14
C 07D 403/12
C 07D 403/14
C 07D 409/14
C 07D 413/14
A 61K 31/506
(30) US 25.06.2008. 75583 P
US 25.02.2009. 155434 P
(86) PCT/US2009048428 24.06.2009.
(96) EP 09736712.2 24.06.2009. En
(87) WO2010002655 07.01.2010. 201001
(97) EP 2318392 11.05.2011. 201119 En
(54) PYRIMIDINE DERIVATIVES AS KINASE INHIBITORS
(71) IRM LLC, 131 Front Street, P.O. Box HM 2899, Hamilton HM LX, BM
(72) MARSILJE III, Thomas H., 1844 Narragansett Court, San Diego, California 92107, US;
LU, Wenshuo, 3644 Berryfield Court, San Diego, California 92130, US;
CHEN, Bei, 11048 Creekbridge Place, San Diego, California 92128, US;
HE, Xiaohui, 12461 Dormouse Road, San Diego, California 92129, US;
LEE, Christian Cho-Hua, 11115 Ice Skate Place, San Diego, California 92126, US;
JIANG, Songchun, 10512 Rancho Carmel Drive, San Diego, California 92128, US;
YANG, Kunyong, 11861 Spruce Run Drive, C, San Diego, California 92131, US
(74) Bailey, Sam Rogerson, et al, Mewburn Ellis LLP, 33 Gutter Lane, London, EC2V 8AS, GB

(51) (8) **EP 2303869 ***
C 07D 403/04
A 61K 31/506
(30) US 30.06.2008. 76759
(86) PCT/US2009049033 29.06.2009.
(96) EP 09774228.2 29.06.2009. En
(87) WO2010002777 07.01.2010. 201001
(97) EP 2303869 06.04.2011. 201114 En
(54) PROCESS FOR THE PREPARATION OF BENZOIMIDAZOL-2-YL PYRIMIDINE DERIVATIVES
(71) Janssen Pharmaceutica, N.V., Turnhoutseweg 30, 2340 Beerse, BE
(72) CESCO-CANCIAN, Sergio, 4108 Shannon, Bethlehem, PA 18020, US;
GRIMM, Jeffrey, S., 64 Country Squire Way, Somerville, NJ 08876, US;
MANI, Neelakandha, S., 13109 Russet Leaf Lane, San Diego, CA 92129, US;
MAPES, Christopher, M., 8255 Pasadena Avenue, La Mesa, CA 91941, US;
PALMER, David, C., 605 Covered Bridge Lane, Doylestown, PA 18901, US;
PIPPEL, Daniel, J., 13106 Caminito Mar Villa, Del Mar, CA 92014, US;
XIAO, Tong, 202 West Locust Avenue, Edison, NJ 08820, US;
BROGGINI, Diego, Amin Bollinger Weg 5, CH-8050 Zurich, CH;
LOCHNER, Susanne, Tittisbuehl 1, D-78224 Singen, DE
(74) Carpmaels & Ransford, One Southampton Row, London, WC1B 5HA, GB

(51) (8) **EP 2308870**
C 07D 403/06
C 07D 471/04
C 07D 473/00
C 07D 487/04
C 07D 513/04
A 61P 25/00
A 61K 31/4192
A 61K 31/437
A 61K 31/4196
A 61K 31/5025
A 61K 31/404
A 61K 31/431
(30) EP 01.06.2005. 05011780
EP 01.06.2005. 05011779
(96) EP 10012556.6 31.05.2006. En
(97) EP 2308870 13.04.2011. 201115 En
(54) 2-oxo-1-pyrrolidine deriatives, processes for preparing them and their uses
(71) UCB Pharma S.A., Allée de la Recherche 60, 1070 Brussels, BE
(72) Kenda, BenoSt, c/o USC Pharma S.A., Intellectual Proporty Dpt., 60, Allée de la Recherche, 1070 Brussels, BE;
Quesnel, Yannick, c/o USC Pharma S.A., Intellectual Proporty Dpt., 60, Allée de la Recherche, 1070 Brussels, BE;
Ates, Ali, c/o USC Pharma S.A., Intellectual Proporty Dpt., 60, Allée de la Recherche, 1070 Brussels, BE;
Michel, Philippe, c/o USC Pharma S.A., Intellectual Proporty Dpt., 60, Allée de la Recherche, 1070 Brussels, BE;
Turet, Laurent, c/o USC Pharma S.A., Intellectual Proporty Dpt., 60, Allée de la Recherche, 1070 Brussels, BE;

Mercier, Joël, c/o USC Pharma S.A., Intellectual Proporty Dpt., 60, Allée de la Recherche, 1070 Brussels, BE

(51) (8) **EP 2307403** *
C 07D 403/12
C 07D 403/14
A 61K 8/49
A 61Q 5/12
(30) FR 04.07.2008. 0854553
US 14.07.2008. 80284
(86) PCT/FR2009051164 18.06.2009.
(96) EP 09772723.4 18.06.2009. Fr
(87) WO2010001041 07.01.2010. 201001
(97) EP 2307403 13.04.2011. 201115 Fr
(54) COSMETIC COMPOSITION, COSMETIC TREATMENT METHOD AND 4-OXO-1,4-DIHYDROPYRIMIDIN-2-YL COMPOUNDS
(71) L'Oréal, 14, rue Royale, 75008 Paris, FR
(72) MOUGIN, Nathalie, 18 Rue Titon, F-75011 Paris, FR;
SCHULTZE, Xavier, 43 Allée Robillard, F-93320 Les Pavillons Sous Bois, FR;
DUBLANCHET, Anne-Claude, 6 bis rue du Nord, F-92160 Antony, FR;
PHILIPPE, Michel, 34 Rue Pierre et Marie Curie, F-91320 Wissous, FR
(74) Dodin, Catherine, L'Oréal, D.I.P.I., 25-29 Quai Aulagnier, 92600 Asnires, FR

(51) (8) **EP 2318395** *
C 07D 403/12
C 07D 403/10
A 61K 31/4025
A 61P 35/00
(30) US 02.08.2008. 85844 P
(86) PCT/US2009051522 23.07.2009.
(96) EP 09805348.1 23.07.2009. En
(87) WO2010017035 11.02.2010. 201006
(97) EP 2318395 11.05.2011. 201119 En
(54) INHIBITORS OF IAP
(71) Genentech, Inc., 1 DNA Way, South San Francisco, CA 94080, US
(72) DUDLEY, Dannette, 1245 Glacier Avenue, Pacifica, CA 94044, US;
FLYGARE, John, A., 1419 Vancouver Avenue, Burlingame, CA 94010, US;
NDUBAKU, Chudi, 1050 Mississippi Street, 3, San Francisco, CA 94107, US
(74) Wytenburg, Wilhelmus Johannes, et al, Mewburn Ellis LLP, 33 Gutter Lane, London, EC2V 8AS, GB

(51) (8) **EP 2321301** *
C 07D 403/12
A 61K 31/4155
A 61K 31/422
A 61P 7/02
C 07D 405/14
C 07D 413/12
(30) US 23.06.2008. 74736
US 03.10.2008. 102381
(86) PCT/SE2009050778 22.06.2009.
(96) EP 09770485.2 22.06.2009. En
(87) WO2009157860 30.12.2009. 200953
(97) EP 2321301 18.05.2011. 201120 En
(54) NEW HETEROCYCLIC CARBOXAMIDES FOR USE AS THROMBIN INHIBITORS
(71) AstraZeneca AB, 151 85 Södertälje, SE
(72) BRZNALT, Jonas, AstraZeneca R&D Mölndal, S-431 83 Mölndal, SE;
GUSTAFSSON, David, AstraZeneca R&D Mölndal, S-431 83 Mölndal, SE;
NILSSON, Ingemar, AstraZeneca R&D Mölndal, S-431 83 Mölndal, SE;
POLLA, Magnus, AstraZeneca R&D Mölndal, S-431 83 Mölndal, SE

(51) (8) **EP 2079732** *
C 07D 405/04
A 61K 31/501
(30) EP 29.05.2006. 06114615
EP 05.09.2006. 06120117
(86) PCT/EP2007054940 22.05.2007.
(96) EP 07729379.3 22.05.2007. En
(87) WO2007137968 06.12.2007. 200749
(97) EP 2079732 22.07.2009. 200930 En
(54) 3- (1, 3-BENZ0DI0X0L-5-YL) -6- (4-CYCLOPROPYLPIPERAZIN-1-YL) -PYRIDAZINE, ITS SALTS AND SOLVATES AND ITS USE AS HISTAMINE H3 RECEPTOR ANTAGONIST
(71) High Point Pharmaceuticals, LLC, 4170 Mendenhall Oaks Parkway, High Point, NC 27265, US
(72) HOHLWEG, Rolf, Nederste Torpenvej 29, DK-3050 Humlebæk, DK
(74) Russell, Lindsey, Elkington and Fife LLP, Thavies Inn House, 3-4 Holborn Circus, London EC1N 2HA, GB

(51) (8) **EP 2318396** *
C 07D 405/14
A 61K 31/496
A 61P 31/10
(30) EP 03.07.2008. 08159600
US 03.07.2008. 133852 P
(86) PCT/EP2009057975 25.06.2009.
(96) EP 09772368.8 25.06.2009. En
(87) WO2010000668 07.01.2010. 201001
(97) EP 2318396 11.05.2011. 201119 En
(54) A CRYSTALLINE FORM OF POSACONAZOLE
(71) Sandoz AG, Lichtstrasse 35, 4056 Basel, CH
(72) WIESER, Josef, c/o Sandoz GmbH, Biochemiestr. 10, A-6250 Kundl, AT;
PICHLER, Arthur, c/o Sandoz GmbH, Biochemiestr. 10, A-6250 Kundl, AT;
HOTTER, Andreas, c/o Sandoz GmbH, Biochemiestr. 10, A-6250 Kundl, AT;
GRIESSER, Ulrich, c/o Sandoz GmbH, Biochemiestr. 10, A-6250 Kundl, AT;
LANGES, Christoph, c/o Sandoz GmbH, Biochemiestr. 10, A-6250 Kundl, AT
(74) Altmann, Andreas, et al, Herzog Fiesser & Partner, Patentanwälte, Isartorplatz 1, 80331 München, DE

(51) (8) **EP 2316832**
C 07D 407/04
C 07D 405/04
C 07D 307/94
A 61K 31/4355
A 61K 31/438
(30) US 27.08.2004. 605020 P
US 08.10.2004. 617170 P
US 05.11.2004. 625676 P
US 19.05.2005. 683169 P
(96) EP 10012704.2 26.08.2005. En
(97) EP 2316832 04.05.2011. 201118 En
(54) Cyclopamine analogues and methods of use thereof
(71) Infinity Pharmaceuticals, Inc., 780 Memorial Drive, Cambridge MA 02139, US
(72) Janardannair, Somarajannair, 39 Flett Road, Belmont, MA 02478, US;
Adams, Julian, 673 Boylston Street, Boston, MA 02116, US;
Tremblay, Martin, 780 Memorial Drive, Cambridge, MA 02139, US;
Nevalainen, Marta, 145A Suomi Road, Unit 1, Quincy, MA 02169, US;
Castro, Alfredo, C., 43 Wildwood Street, Winchester, MA 01890, US;
Foley, Michael, A., 94 Shaw Road, Chestnut Hill, MA 02467, US;
Porter, James, R., 10 Lake Shore Court N 2, Brighton, MA 02135, US
(74) Blood, Marlon, Vereenigde, Johan de Wittlaan 7, 2517 JR The Hague, NL

(51) (8) **EP 2316833**
C 07D 407/04
C 07D 405/04
C 07D 307/94
A 61K 31/4355
A 61K 31/438
(30) US 27.08.2004. 605020 P
US 08.10.2004. 617170 P
US 05.11.2004. 625676 P
US 19.05.2005. 683169 P
(96) EP 10012778.6 26.08.2005. En
(97) EP 2316833 04.05.2011. 201118 En
(54) Process for the preparation of Cyclopamine analogue compounds
(71) Infinity Pharmaceuticals, Inc., 780 Memorial Drive, Cambridge MA 02139, US
(72) Janardanannair, Somarajannair, 39 Flett Road, Belmont, MA 02478, US;
Adams, Julian, 673 Boylston Street, Boston, MA 02116, US;
Tremblay, Martin, 780 Memorial Drive, Cambridge, MA 02139, US;
Nevalainen, Marta, 145A Suomi Road, Unit 1, Quincy, MA 02169, US;
Castro, Alfredo C., 43 Wildwood Street, Winchester, MA 01890, US;
Foley, Michael A., 94 Shaw Road, Chestnut Hill, MA 02467, US;
Porter, James R., 10 Lake Shore Court N 2, Brighton, MA 02135, US
(74) Blood, Marlon, Vereenigde, Johan de Wittlaan 7, 2517 JR The Hague, NL

(51) (8) **EP 2116542**
C 07D 407/06
A 61K 31/496
A 61P 35/00
(30) JP 29.01.2007. 2007017491
US 05.02.2007. 888257 P
(86) PCT/JP2008051695 28.01.2008.
(96) EP 08704375.8 28.01.2008. Ja
(87) WO2008093853 07.08.2008. 200832
(97) EP 2116542 11.11.2009. 200946 En
(54) SOLID OF MACROLIDE COMPOUND, METHOD FOR PRODUCTION THEREOF, AND PHARMACEUTICAL COMPOSITION COMPRISING THE SAME
(71) Eisai R&D Management Co., Ltd., 6-10, Koishikawa 4-chome, Bunkyo-ku, Tokyo 112-8088, JP;
MERCIAN CORPORATION, 5-8, Kyobashi 1-chome, Chuo-ku, Tokyo 104-8305, JP
(72) ISHIHARA, Hiroshi, c/o Eisai Co. Ltd., Tsukuba Research Laboratories, 1-3 Tokodai 5-chome, Tsukuba-shi, Ibaraki 300-2635, JP;
SASHO, Manabu, c/o Eisai Co. Ltd., 6-10 Koishikawa 4-chome, Bunkyo-ku, Tokyo 112-8088, JP;
SATO, Keizo, c/o Eisai Co. Ltd., Tsukuba Research Laboratories, 1-3 Tokodai 5-chome, Tsukuba-shi, Ibaraki 300-2635, JP;
KAMAHARA, Takashi, 98-1-510 Daijuku, Sodegaura-shi, Chiba 299-0241, JP;
YOSHIDA, Masashi, PALSCOURT II, 103, 1-16-21 Koenjiminami, Suginami-ku, Tokyo 166-0003, JP
(74) HOFFMANN EITLE, Patent- und Rechtsanwälte, Arabellastraße 4, 81925 München, DE

(51) (8) **EP 2313399 ***
C 07D 409/04
C 07D 409/14
C 07D 417/04
A 61K 31/427
A 61K 31/4196
A 61K 31/5377
A 61P 35/00
A 61P 29/00
A 61P 9/00
(30) US 19.06.2008. 132484
(86) PCT/US2009003607 17.06.2009.
(96) EP 09767054.1 17.06.2009. En
(87) WO2009154741 23.12.2009. 200952
(97) EP 2313399 27.04.2011. 201117 En
(54) THIOPHENE OR THIAZOLE DERIVATIVES AND THEIR USE AS PI3K INHIBITORS
(71) MILLENNIUM PHARMACEUTICALS, INC., 40 Landsdowne Street, Cambridge, MA 02139, US
(72) CARDIN, David, P., 26 Fairview Avenue, Wilmington, MA 01887, US;
GAULIN, Jeffrey, L., 17 Justin Circle, Londonderry, NH 03053, US;
GREENSPAN, Paul, D., 8 Overlook Drive, Acton, MA 01720, US;
VYSKOCIL, Stepan, 24 Hovey Street, Watertown, MA 02472, US;
XU, Tianlin, 2 Arrowwood Drive, Shrewsbury, MA 01545, US;

RENOU, Christelle, C., 3 Plaza Avenue, Stoneham, MA 02180, US
(74) Harris, Jennifer Lucy, et al, Kilburn & Strode LLP, 20 Red Lion Street, London WC1R 4PJ, GB

(51) (8) **EP 2298764**
C 07D 413/04
C 07D 413/14
A 61K 31/454
A 61P 25/00
(30) US 21.11.2005. 739107 P
(96) EP 10010919.8 21.11.2006. En
(97) EP 2298764 23.03.2011. 201112 En
(54) 4-Oxadiazolyl-piperidine compounds and use thereof
(71) Purdue Pharma LP, One Stamford Forum, 201 Tresser Boulevard, Stamford, CT 06901-3431, US
(72) Tafesse, Laykea, 11 Abbington Lane, Robbinsville, NJ 08691, US
(74) Maiwald, Walter, Maiwald Patentanwalts GmbH, Elisenhof, Elisenstrasse 3, 80335 München, DE

(51) (8) **EP 2298765**
C 07D 413/04
C 07D 413/14
A 61K 31/454
A 61P 25/00
(30) US 21.11.2005. 739107 P
(96) EP 10010920.6 21.11.2006. En
(97) EP 2298765 23.03.2011. 201112 En
(54) 4-Oxadiazolyl-piperidine compounds and use thereof
(71) Purdue Pharma LP, One Stamford Forum, 201 Tresser Boulevard, Stamford, CT 06901-3431, US
(72) Tafesse, Laykea, 11 Abbington Lane, Robbinsville, NJ 08691, US
(74) Maiwald, Walter, Maiwald Patentanwalts GmbH, Elisenhof, Elisenstrasse 3, 80335 München, DE

(51) (8) **EP 2300461 ***
C 07D 413/10
C 07D 413/14
A 61K 31/5355
A 61P 19/10
(30) US 01.05.2008. 49650 P
WO 25.07.2008. PCT/US2008/009017
US 25.07.2008. 137148 P
US 04.02.2009. 206785 P
(86) PCT/US2009002653 30.04.2009.
(96) EP 09739203.9 30.04.2009. En
(87) WO2009134400 05.11.2009. 200945
(97) EP 2300461 30.03.2011. 201113 En
(54) CYCLIC INHIBITORS OF 11BETA-HYDROXYSTEROID DEHYDROGENASE 1
(71) Vitae Pharmaceuticals, Inc., 502 West Office Center Drive, Fort Washington, PA 19034, US;
Boehringer Ingelheim International GmbH, Binger Straße 173, 55216 Ingelheim am Rhein, DE
(72) CLAREMON, David, A., 1508 Aidenn Lair Road, Maple Glen, PA 19002, US;
ZHUANG, Linghang, 3135 Fox Drive, Chalfont, PA 18914, US;
LEFTHERIS, Katerina, 92 Richmond Drive, Skillman, NJ 08558, US;
TICE, Colin, M., 1325 Pinebrook Court, Ambler, PA 19002, US;
XU, Zhenrong, 3855 Blair Mill Road Apt. 235-b, Horsham, PA 19002, US;
YE, Yuanjie, 835 Meetinghouse Road, Ambler, PA 19002, US;
SINGH, Suresh, B., 4 Adams Road, Kendall Park, NJ 08824, US;
CACATIAN, Salvacion, 89 Ramsgate Court, Blue Bell, PA 19422, US;
ZHAO, Wei, 930 Heritage Drive, Eagleville, PA 19403, US;
HIMMELSBACH, Frank, C/o Boehringer Ingelheim Gmbh, Cd Patents, 173 Binger Strasse, 55216 Ingelheim Am Rhein, DE
(74) Simpson, Mark Geoffrey, Potter Clarkson LLP, Park View House, 58 The Ropewalk, Nottingham, NG1 5DD, GB

(51) (8) **EP 2303872 ***
C 07D 413/10
A 61K 31/422
A 61P 25/00
C 07D 209/46
(30) US 06.06.2008. 59485 P
(86) PCT/SE2009050682 08.06.2009.
(96) EP 09758630.9 08.06.2009. En
(87) WO2009148403 10.12.2009. 200950
(97) EP 2303872 06.04.2011. 201114 En
(54) ISOXAZOLE DERIVATIVES AND THEIR USE AS METABOTROPIC GLUTAMATE RECEPTOR POTENTIATORS
(71) AstraZeneca AB, 151 85 Södertälje, SE
(72) CACCIOLA, Joseph, c/o AstraZeneca Intellectual Property, AstraZeneca R&D Wilmington, 1800 Concord Pike, P.O. Box 15437, Wilmington, Delaware 19850-5437, US;
EMPFIELD, James, AstraZeneca R&D Wilmington, Wilmington, Delaware 19850-5437, US;
FOLMER, James, AstraZeneca R&D Wilmington, Wilmington, Delaware 19850-5437, US;
HUNTER, Angela M, AstraZeneca R&D Wilmington, Wilmington, Delaware 19850-5437, US;
THRONER, Scott, AstraZeneca R&D Wilmington, Wilmington, Delaware 19850-5437, US
(74) Padget, Lucy Clare, AstraZeneca AB, Global Intellectual Property, 151 85 Sodertalje, SE

(51) (8) **EP 2303873 ***
C 07D 413/12
A 61K 31/538
A 61P 11/00
C 07D 231/12
(30) US 18.06.2008. 73420
(86) PCT/SE2009050749 17.06.2009.
(96) EP 09766947.7 17.06.2009. En
(87) WO2009154557 23.12.2009. 200952
(97) EP 2303873 06.04.2011. 201114 En
(54) BENZOXAZINONE DERIVATIVES ACTING AS BETA2-ADRENORECEPTOR AGONIST FOR THE TREATMENT OF RESPIRATORY DISORDERS
(71) AstraZeneca AB, 151 85 Södertälje, SE
(72) BONNERT, Roger, Victor, AstraZeneca R&D Charnwood, Bakewell Road, Loughborough Leicestershire LE11 5RH, GB;
CONNOLLY, Stephen, AstraZeneca R&D Charnwood, Bakewell Road, Loughborough Leicestershire LE11 5RH, GB;

COOK, Anthony Ronald, AstraZeneca R&D Charnwood, Bakewell Road, Loughborough Leicestershire LE11 5RH, GB; EVANS, Richard, AstraZeneca R&D Charnwood, Bakewell Road, Loughborough Leicestershire LE11 5RH, GB; RAUBO, Piotr, AstraZeneca R&D Charnwood, Bakewell Road, Loughborough Leicestershire LE11 5RH, GB
(74) Tierney, Francis John, et al, AstraZeneca, Intellectual Property Patents, 151 85 Södertalje, SE

(51) (8) **EP 2221304**
C 07D 413/14
C 07D 265/30
C 07D 265/32
(30) JP 22.07.2005. 2005213311
JP 14.09.2005. 2005267485
JP 24.01.2006. 2006015436
(96) EP 10002308.4 21.07.2006. En
(97) EP 2221304 25.08.2010. 201034 En
(54) Method for synthesizing intermediate compound for synthesizing a pharmaceutical agent
(71) Mitsubishi Tanabe Pharma Corporation, 2-10, Dosho-machi 3-chome, Chuo-ku, Osaka-shi, Osaka 541-8505, JP; Sanofi-Aventis, 174 Avenue de France, 75013 Paris, FR
(72) Okuyama, Masahiro, c/o Mitsubishi Tanabe Pharma Corporation, Tokyo Office, 2-6 Nihonbashi-honcho 2-chome, Chuo-ku, Tokyo 1038405, JP;
Uehara, Fumiaki, c/o Mitsubishi Tanabe Pharma Corporation, Tokyo Office, 2-6 Nihonbashi-honcho 2-chome, Chuo-ku, Tokyo 1038405, JP;
Iwamura, Hiroshi, c/o Mitsubishi Tanabe Pharma Corporation, Tokyo Office, 2-6 Nihonbashi-honcho 2-chome, Chuo-ku, Tokyo 1038405, JP;
Watanabe, Kazutoshi, c/o Mitsubishi Tanabe Pharma Corporation, Tokyo Office, 2-6 Nihonbashi-honcho 2-chome, Chuo-ku, Tokyo 1038405, JP
(74) HOFFMANN EITLE, Patent- und Rechtsanwälte, Arabellastraße 4, 81925 München, DE

(51) (8) **EP 2221305**
C 07D 413/14
C 07D 239/26
(30) JP 22.07.2005. 2005213311
JP 14.09.2005. 2005267485
JP 24.01.2006. 2006015436
(96) EP 10002309.2 21.07.2006. En
(97) EP 2221305 25.08.2010. 201034 En
(54) Method for synthesizing intermediate compound for synthesizing a pharmaceutical agent
(71) Mitsubishi Tanabe Pharma Corporation, 2-10, Dosho-machi 3-chome, Chuo-ku, Osaka-shi, Osaka 541-8505, JP; Sanofi-Aventis, 174 Avenue de France, 75013 Paris, FR
(72) Okuyama, Masahiro, c/o Mitsubishi Tanabe Pharma Corporation, Tokyo Office, 2-6 Nihonbashi-honcho 2-chome, Chuo-ku, Tokyo 1038405, JP;
Uehara, Fumiaki, c/o Mitsubishi Tanabe Pharma Corporation, Tokyo Office, 2-6 Nihonbashi-honcho 2-chome, Chuo-ku, Tokyo 1038405, JP;
Iwamura, Hiroshi, c/o Mitsubishi Tanabe Pharma Corporation, Tokyo Office, 2-6 Nihonbashi-honcho 2-chome, Chuo-ku, Tokyo 1038405, JP;
Watanabe, Kazutoshi, c/o Mitsubishi Tanabe Pharma Corporation, Tokyo Office, 2-6 Nihonbashi-honcho 2-chome, Chuo-ku, Tokyo 1038405, JP
(74) HOFFMANN EITLE, Patent- und Rechtsanwälte, Arabellastraße 4, 81925 München, DE

(51) (8) **EP 2297142 ***
C 07D 413/14
C 07D 401/10
C 07D 401/14
C 07D 417/14
A 61K 31/501
A 61P 9/02
(30) US 24.06.2008. 75277 P
(86) PCT/EP2009057320 15.06.2009.
(96) EP 09769133.1 15.06.2009. En
(87) WO2009156284 30.12.2009. 200953
(97) EP 2297142 23.03.2011. 201112 En
(54) NOVEL SUBSTITUTED PYRIDIN-2-ONES AND PYRIDAZIN-3-ONES
(71) F. Hoffmann-La Roche AG, Grenzacherstrasse 124, 4070 Basel, CH
(72) DEWDNEY, Nolan, James, 14595 Horseshoe Drive, Saratoga, California 95070, US;
KONDRU, Rama, K., 1035 Aster Avenue, 2118, Sunnyvale, California 94086, US;
LOE, Bradley, E., 154 Stockton Avenue, Santa Cruz, California 95060, US;
LOU, Yan, 1740 Fallbrook Avenue, San Jose, California 95130, US;
MCINTOSH, Joel, 540 Fremont Avenue, Pacifica, California 94044, US;
OWENS, Timothy, D., 938 Clark Avenue, No. 37, Mountain View, California 94040, US;
SOTH, Michael, 2321 Edsel Drive, Milpitas, California 95035, US
(74) Sauer, Frank, F. Hoffmann-La Roche AG, Patent Department, Grenzacherstrasse 124, 4070 Basel, CH

(51) (8) **EP 2300462 ***
C 07D 413/14
C 07D 273/01
A 61K 31/553
A 61P 7/00
(30) EP 06.06.2008. 08290520
(86) PCT/EP2009003650 22.05.2009.
(96) EP 09757185.5 22.05.2009. De
(87) WO2009146802 10.12.2009. 200950
(97) EP 2300462 30.03.2011. 201113 De
(54) MACROCYCLIC UREA AND SULFAMIDE DERIVATIVES AS INHIBITORS OF TAFIA
(71) Sanofi-Aventis, 174 avenue de France, 75013 Paris, FR
(72) KALLUS, Christopher, c/o Sanofi-Aventis Deutschland Gmbh, 65926 Frankfurt am Main, DE;
BROENSTRUP, Mark, c/o Sanofi-Aventis Deutschland Gmbh, 65926 Frankfurt am Main, DE;
EVERS, Andreas, c/o Sanofi-Aventis Deutschland Gmbh, 65926 Frankfurt am Main, DE;
GLOBISCH, Anja, c/o Sanofi-Aventis Deutschland Gmbh, 65926 Frankfurt am Main, DE;
SCHREUDER, Herman, c/o Sanofi-Aventis Deutschland Gmbh, 65926 Frankfurt am Main, DE;
WAGNER, Michael, c/o Sanofi-Aventis Deutschland Gmbh, 65926 Frankfurt am Main, DE

(74) Venne-Dunker, Sabine, et al, Sanofi-Aventis Deutschland GmbH, Industriepark Höchst, Gebäude K801, 65926 Frankfurt am Main, DE

(51) (8) **EP 2310385 ***
C 07D 413/14
A 61P 9/12
A 61K 31/4245
(30) US 31.07.2008. 85201 P
US 01.08.2008. 85627 P
(86) PCT/JP2009063833 29.07.2009.
(96) EP 09788017.3 29.07.2009. En
(87) WO2010013835 04.02.2010. 201005
(97) EP 2310385 20.04.2011. 201116 En
(54) SOLID PHARMACEUTICAL COMPOSITION
(71) Takeda Pharmaceutical Company Limited, 1-1 Doshomachi 4-chome, Chuo-ku, Osaka-shi, Osaka 541-0045, JP
(72) TANOUE, Yutaka, c/o TAKEDA PHARMACEUTICAL COMPANY LIMITED, 17-85 Jusohonmachi 2-chome, Yodogawa-ku, Osaka-shi, Osaka 532-8686, JP;
NOMURA, Junya, c/o TAKEDA PHARMACEUTICAL COMPANY LIMITED, 17-85 Jusohonmachi 2-chome, Yodogawa-ku, Osaka-shi, Osaka 532-8686, JP
(74) Dossmann, Gérard, et al, Casalonga & Partners, Bayerstrasse 71-73, 80335 München, DE

(51) (8) **EP 2313402 ***
C 07D 413/14
A 61K 31/345
A 61P 31/04
(30) US 04.06.2008. 58728 P
US 20.02.2009. 154093 P
(86) PCT/GB2009050622 04.06.2009.
(96) EP 09757812.4 04.06.2009. En
(87) WO2009147440 10.12.2009. 200950
(97) EP 2313402 27.04.2011. 201117 En
(54) HETEROCYCLIC UREA DERIVATIVES AND METHODS OF USE THEREOF
(71) AstraZeneca AB, 151 85 Södertälje, SE
(72) SHERER, Brian, AstraZeneca R&D Boston, 35 Gatehouse Drive, Waltham, Massachusetts 02451, US;
ZHOU, Fei, AstraZeneca R&D Boston, 35 Gatehouse Drive, Waltham, Massachusetts 02451, US

(51) (8) **EP 2318401 ***
C 07D 417/04
C 07D 417/02
C 07D 413/04
C 07D 413/02
C 07D 487/04
C 07D 487/02
A 61K 31/33
A 61P 35/00
(30) US 16.08.2008. 89508 P
(86) PCT/US2009053889 14.08.2009.
(96) EP 09808640.8 14.08.2009. En
(87) WO2010021934 25.02.2010. 201008
(97) EP 2318401 11.05.2011. 201119 En
(54) AZAINDOLE INHIBITORS OF IAP
(71) Genentech, Inc., 1 DNA Way, South San Francisco, CA 94080, US
(72) BERGERON, Philippe, 941 Dolores Street, Apt. 1, San Francisco, CA 94110, US;
KOEHLER, Michael, F. T., 516 Georgia Avenue, Palo Alto, California 94306, US
(74) Wytenburg, Wilhelmus Johannes, et al, Mewburn Ellis LLP, 33 Gutter Lane, London, EC2V 8AS, GB

(51) (8) **EP 2303874 ***
C 07D 417/06
C 07D 417/14
A 01N 43/80
(30) US 18.06.2008. 73574 P
(86) PCT/EP2009057531 17.06.2009.
(96) EP 09765865.2 17.06.2009. En
(87) WO2009153285 23.12.2009. 200952
(97) EP 2303874 06.04.2011. 201114 En
(54) SULFONAMIDE COMPOUNDS
(71) BASF SE, 67056 Ludwigshafen, DE
(72) VON DEYN, Wolfgang, An der Bleiche 24, 67435 Neustadt, DE;
PUHL, Michael, Platanenstr. 37, 69493 Hirschberg, DE;
POHLMAN, Matthias, Am Langenstein 13, 67251 Freinsheim, DE;
RACK, Michael, Hildastr. 11/1, 69214 Eppelheim, DE;
PARRA RAPADO, Liliana, Walther-Blumenstock-Str. 22, 77654 Offenburg, DE;
LANGEWALD, Jürgen, Beethovenstr. 5, 68165 Mannheim, DE;
ANSPAUGH, Douglas D., 4007 Winecott Drive, Apex, North Carolina 27502, US;
OLOUMI-SADEGHI, Hassan, -, deceased, US;
CULBERTSON, Deborah L., 6400 Vintage Ridge Lane, Fuquay Varina, North Carolina 27526, US;
RANKL, Nancy B., 111 Bardsey Ct., Cary, North Carolina 27513, US;
KAMP, Hennicke, Kirchheimbolander Straße 9, 67294 Bischheim, DE;
VAN RAVENZWAAY, Bennard, Rheinstr. 6, 67112 Altrip, DE
(74) Reitstötter - Kinzebach, Patentanwälte, Ludwigsplatz 4, 67059 Ludwigshafen, DE

(51) (8) **EP 2305672**
C 07D 417/12
A 61K 31/4439
A 61K 31/497
A 61K 31/541
A 61P 25/28
A 61P 43/00
C 07D 417/10
C 07D 417/14
(30) JP 13.06.2008. 2008154990
JP 22.10.2008. 2008271689
JP 22.04.2009. 2009103616
(86) PCT/JP2009060696 11.06.2009.
(96) EP 09762528.9 11.06.2009. Ja
(87) WO2009151098 17.12.2009. 200951
(97) EP 2305672 06.04.2011. 201114 En
(54) SULFUR-CONTAINING HETEROCYCLIC DERIVATIVE HAVING ß-SECRETASE-INHIBITING ACTIVITY
(71) Shionogi & Co., Ltd., 1-8 Doshomachi 3-chome, Chuo-ku, Osaka-shi, Osaka 541-0045, JP

(72) HORI, Akihiro, c/o Shionogi&Co. Ltd., 12-4 Sagisu 5-chome, Fukushima-ku, Osaka-shi, Osaka 553-0002, JP;
YONEZAWA, Shuji, c/o Shionogi&Co. Ltd., Shionogi Innovation Center for Drug Discovery, North 21, West 11, Kita-ku, Sapporo-shi, Hokkaido 001-0021, JP;
FUJIKOSHI, Chiaki, c/o Shionogi&Co. Ltd., 12-4 Sagisu 5-chome, Fukushima-ku, Osaka-shi, Osaka 553-0002, JP;
MATSUMOTO, Sae, c/o Shionogi&Co. Ltd., 12-4 Sagisu 5-chome, Fukushima-ku, Osaka-shi, Osaka 553-0002, JP;
KOORIYAMA, Yuuji, c/o Shionogi&Co. Ltd., 12-4 Sagisu 5-chome, Fukushima-ku, Osaka-shi, Osaka 553-0002, JP;
UENO, Tatsuhiko, c/o Shionogi&Co. Ltd., 12-4 Sagisu 5-chome, Fukushima-ku, Osaka-shi, Osaka 553-0002, JP;
KATO, Terukazu, c/o Shionogi&Co. Ltd., 12-4 Sagisu 5-chome, Fukushima-ku, Osaka-shi, Osaka 553-0002, JP
(74) Vossius & Partner, Siebertstrasse 4, 81675 München, DE

(51) (8) **EP 2300463 ***
C 07D 417/14
C 07D 498/06
A 61P 31/04
A 61K 31/4709
A 61K 31/4738
(30) US 04.06.2008. 58736
(86) PCT/GB2009050611 03.06.2009.
(96) EP 09757805.8 03.06.2009. En
(87) WO2009147433 10.12.2009. 200950
(97) EP 2300463 30.03.2011. 201113 En
(54) HETEROCYCLIC UREA DERIVATIVES FOR THE TREATMENT OF BACTERIAL INFECTIONS
(71) AstraZeneca AB, 151 85 Södertälje, SE
(72) HILL, Pamela, AstraZeneca R&D Boston, 35 Gatehouse Drive, Waltham, Massachusetts 02451, US;
MANCHESTER, John, Irvin, AstraZeneca R&D Boston, 35 Gatehouse Drive, Waltham, Massachusetts 02451, US;
SHERER, Brian, AstraZeneca R&D Boston, 35 Gatehouse Drive, Waltham, Massachusetts 02451, US;
CHOY, Allison, Laura, AstraZeneca R&D Boston, 35 Gatehouse Drive, Waltham, MA 02451, US
(74) Padget, Lucy Clare, et al, AstraZeneca AB, Global Intellectual Property, 151 85 Sodertalje, SE

(51) (8) **EP 2300464 ***
C 07D 453/02
A 61K 31/439
A 61P 11/00
(86) PCT/GB2008001647 13.05.2008.
(96) EP 08750581.4 13.05.2008. En
(87) WO2009138707 19.11.2009. 200947
(97) EP 2300464 30.03.2011. 201113 En
(54) QUINUCLIDINE DERIVATIVES AS MUSCARINIC M3 RECEPTOR ANTAGONISTS
(71) AstraZeneca AB, 151 85 Södertälje, SE;
Pulmagen Therapeutics (Synergy) Limited, Fulmer Hall, Windmill Road, Fulmer, Slough, Berkshire SL3 6HD, GB
(72) FORD, Rhonan, Lee, AstraZeneca R&D Charnwood, Bakewell Road, Loughborough, Leicestershire LE11 5RH, GB;
MATHER, Andrew, Nigel, AstraZeneca R&D Charnwood, Bakewell Road, Loughborough, Leicestershire LE11 5RH, GB;
METE, Antonio, AstraZeneca R&D Charnwood, Bakewell Road, Loughborough, Leicestershire LE11 5RH, GB;
BULL, Richard, James, Argenta Discovery Limited, 8/9 Spire Green Centre, Flex Meadow, Harlow, Essex CM19 5TR, GB;
SKIDMORE, Elizabeth, Anne, Argenta Discovery Limited, 8/9 Spire Green Centre, Flex Meadow, Harlow, Essex CM19 5TR, GB
(74) Booth, Catherine Louise, et al, AstraZeneca, Intellectual Property, 151 85 Södertälje, SE

(51) (8) **EP 2310387 ***
C 07D 453/02
A 61P 13/10
A 61K 31/439
(30) SI 29.07.2008. 200800188
SI 20.11.2008. 200800285
SI 21.04.2009. 200900113
(86) PCT/EP2009005497 29.07.2009.
(96) EP 09777523.3 29.07.2009. En
(87) WO2010012459 04.02.2010. 201005
(97) EP 2310387 20.04.2011. 201116 En
(54) A PROCESS FOR THE PREPARATION OF SOLIFENACIN SALTS AND THEIR INCLUSION INTO PHARMACEUTICAL DOSAGE FORMS
(71) KRKA, D.D., Novo Mesto, Smarjeska cesta 6, 8501 Novo mesto, SI
(72) RU I, Milo, Milke Kerinove 9, SI-3000 Celje, SI;
PRUDI, Darja, Smolenja vas 68c, SI-8000 Novo Mesto, SI;
PE AVAR, Anica, Gotna vas 18, SI-8000 Novo Mesto, SI;
ZANOTTI-GEROSA, Antonio, 44 York Street, Cambridge CB1 2PY, GB;
STROPNIK, Tadej, Rusjanov trg 10, SI-1000 Ljublijana, SI
(74) Westendorp | Sommer, Uhlandstraße 2, 80336 München, DE

(51) (8) **EP 2313404 ***
C 07D 453/02
A 61K 31/439
A 61P 11/00
(30) EP 08.08.2008. 08162066
(86) PCT/EP2009005272 21.07.2009.
(96) EP 09777321.2 21.07.2009. En
(87) WO2010015324 11.02.2010. 201006
(97) EP 2313404 27.04.2011. 201117 En
(54) QUINUCLIDINE CARBONATE DERIVATIVES AND MEDICINAL COMPOSITION THEREOF
(71) CHIESI FARMACEUTICI S.p.A., Via Palermo, 26/A, 43100 Parma, IT
(72) AMARI, Gabriele, Via Palermo 26/A, I-43100 Parma, IT;
DELCANALE, Maurizio, Via Palermo 26/A, I-43100 Parma, IT
(74) Minoja, Fabrizio, Bianchetti Bracco Minoja S.r.l., Via Plinio, 63, 20129 Milano, IT

(51) (8) **EP 2121683 ***
C 07D 471/04
A 61K 31/496
A 61P 1/14
(30) EP 25.01.2007. 07101153
(86) PCT/EP2008050818 24.01.2008.
(96) EP 08708157.6 24.01.2008. En
(87) WO2008090200 31.07.2008. 200831
(97) EP 2121683 25.11.2009. 200948 En
(54) 2-PIPERAZIN-1-YL-3H-IMIDAZO[4,5-B]PYRIDINE DERIVATIVES

(71) Janssen Pharmaceutica, N.V., Turnhoutseweg 30, 2340 Beerse, BE
(72) JANSSENS, Frans, Eduard, Janssen Pharmaceutica NV, Turnhoutseweg 30, B-2340 Beerse, BE;
GUILLEMONT, Jérôme Émile Georges, Johnson & Johnson, Pharmaceutical Research and Development, A division of Janssen-Cilag Campus de Maigremont, Maigremont BP 615, F-27106 Val de Reuil Cedex, FR;
SOMMEN, François Maria, Janssen Pharmaceutica NV, Turnhoutseweg 30, B-2340 Beerse, BE;
BONFANTI, Jean-François, Johnson & Johnson, Pharmaceutical Research and Development, A division of Janssen-Cilag Campus de Maigremont, Maigremont BP 615, F-27106 Val de Reuil Cedex, FR
(74) Verberckmoes, Filip Gerard, Janssen Pharmaceutica N.V., J&J Patent Law Department, Turnhoutseweg 30, 2340 Beerse, BE

(51) (8) **EP 2294068 ***
C 07D 471/04
A 61K 31/437
(30) FR 21.04.2008. 0802195
(86) PCT/FR2009000456 17.04.2009.
(96) EP 09738348.3 17.04.2009. Fr
(87) WO2009133314 05.11.2009. 200945
(97) EP 2294068 16.03.2011. 201111 Fr
(54) 1,3-DIHYDRO-2H-PYRROLO[3,2-B]PYRIDIN-2-ONE DERIVATIVES, PREPARATION THEREOF AND THERAPEUTIC USES THEREOF
(71) Sanofi-Aventis, 174 Avenue de France, 75013 Paris, FR
(72) COUTURIER Cédric, c/o Sanofi-aventis, Département Brevets, 174 avenue de France, F-75013 PARIS, FR;
FOULON Loïc, c/o Sanofi-aventis, Département Brevets, 174 avenue de France, F-75013 PARIS, FR;
SERRADEIL-LEGAL Claudine, c/o Sanofi-aventis, Département Brevets, 174 avenue de France, F-75013 PARIS, FR;
VALETTE Gérard, c/o Sanofi-aventis, Département Brevets, 174 avenue de France, F-75013 PARIS - FRANCE, FR
(74) Werner, Alain Henri, et al, Sanofi-Aventis, Département Brevets, 174, avenue de France, 75013 Paris, FR

(51) (8) **EP 2297144 ***
C 07D 471/04
C 07D 487/04
A 61P 3/00
A 61K 31/437
(30) US 29.05.2008. 130197
(86) PCT/US2009045430 28.05.2009.
(96) EP 09755719.3 28.05.2009. En
(87) WO2009146358 03.12.2009. 200949
(97) EP 2297144 23.03.2011. 201112 En
(54) IMIDAZOPYRIDINE AND RELATED ANALOGS AS SIRTUIN MODULATORS
(71) Sirtris Pharmaceuticals, Inc., 200 Technology Square, Suite 300, Cambridge, MA 02139, US
(72) VU, Chi, B., 200 Technology Square, Suite 300, Cambridge, MA 02139, US;
NG, Pui, Yee, 200 Technology Square, Suite 300, Cambridge, MA 02139, US;
BLUM, Charles, A., 200 Technology Square, Suite 300, Cambridge, MA 02139, US;
PERNI, Robert, B., 200 Technology Square, Suite 300, Cambridge, MA 02139, US
(74) Learoyd, Stephanie Anne, GlaxoSmithKline, Corporate Intellectual Property (CN9.25.1), 980 Great West Road, Brentford, Middlesex TW8 9GS, GB

(51) (8) **EP 2300465 ***
C 07D 471/04
C 07D 513/04
A 61P 35/00
A 61K 31/437
A 61K 31/506
A 61K 31/501
A 61K 31/53
A 61K 31/444
A 61K 31/497
A 61K 31/496
A 61K 31/4545
(30) GB 13.06.2008. 0810902
US 13.06.2008. 61184 P
(86) PCT/EP2009057318 12.06.2009.
(96) EP 09761801.1 12.06.2009. En
(87) WO2009150240 17.12.2009. 200951
(97) EP 2300465 30.03.2011. 201113 En
(54) IMIDAZOPYRIDINE DERIVATIVES AS INHIBITORS OF RECEPTOR TYROSINE KINASES
(71) Astex Therapeutics Limited, 436 Cambridge Science Park, Milton Park, Cambridge, Cambridgeshire CB4 0QA, GB
(72) BERDINI, Valerio, c/o Astex Therapeutics Limited, 436 Cambridge Science Park, Milton Road, Cambridge, Cambridgeshire CB4 0QA, GB;
CARR, Maria, Grazia, c/o Astex Therapeutics Limited, 436 Cambridge Science Park, Milton Road, Cambridge, Cambridgeshire CB4 0QA, GB;
CONGREVE, Miles, Stuart, 11A Orchard Road, Melbourn, Royston SG8 6HL, GB;
FREDERICKSON, Martyn, c/o Astex Therapeutics Limited, 436 Cambridge Science Park, Milton Road, Cambridge, Cambridgeshire CB4 0QA, GB;
GRIFFITHS-JONES, Charlotte, Mary, c/o Astex Therapeutics Limited, 436 Cambridge Science Park, Milton Road, Cambridge, Cambridgeshire CB4 0QA, GB;
HAMLETT, Christopher, Charles, Frederick, c/o Astex Therapeutics Limited, 436 Cambridge Science Park, Milton Road, Cambridge, Cambridgeshire CB4 0QA, GB;
MADIN, Andrew, Eisai Ltd., European Knowledge Centre, Mosquito Way, Hatfield, Herts. AL10 9SN, GB;
MURRAY, Christopher, William, c/o Astex Therapeutics Limited, 436 Cambridge Science Park, Milton Road, Cambridge, Cambridgeshire CB4 0QA, GB;
BENNING, Rajdeep Kaur, 15 Fairlight Drive, Uxbridge, Middlesex UB8 1XP, GB;
SAXTY, Gordon, c/o Astex Therapeutics Limited, 436 Cambridge Science Park, Milton Road, Cambridge, Cambridgeshire CB4 0QA, GB;
VICKERSTAFFE, Emma, 11 Lucas Lane, Ashwell, Baldock SG7 5LN, GB;
WOODHEAD, Andrew, James, c/o Astex Therapeutics Limited, 436 Cambridge Science Park, Milton Road, Cambridge, Cambridgeshire CB4 0QA, GB;
WOODHEAD, Steven, John, Lilly Blotechnology Center, 10300 Campus Point Drive, Suite 200, San Diego, CA 92121, US;

FREYNE, Eddy, Jean, Edgard, Jan Van Eycklei 8, B-2840 Rumst, BE;
GOVAERTS, Tom, Cornelis, Hortense, Werchtersesteenweg 165, B-3130 Betekom, BE;
ANGIBAUD, Patrick, René, 1 rue du Lavoir, F-27600 Fontaine-Bellenger, FR;
WILLIAMS, Brian, John, deceased, US
(74) Trueman, Lucy Petra, Barker Brettell LLP, 100 Hagley Road, Edgbaston, Birmingham, B16 8QQ, GB

(51) (8) **EP 2300469 ***
C 07D 471/04
C 07D 487/04
A 61K 31/4985
A 61K 31/4353
A 61P 37/00
(30) US 13.05.2008. 52879 P
US 16.02.2009. 152872 P
(86) PCT/US2009043073 07.05.2009.
(96) EP 09747213.8 07.05.2009. En
(87) WO2009140128 19.11.2009. 200947
(97) EP 2300469 30.03.2011. 201113 En
(54) FUSED NITROGEN CONTAINING HETEROCYCLES AND COMPOSITIONS THEREOF AS KINASE INHIBITORS
(71) IRM LLC, 131 Front Street, P.O. Box HM 2899, Hamilton HM LX, BM
(72) ALBAUGH, Pamela, A., 6081 Paseo Monona, Carlsbad, CA 92009, US;
CHOI, Ha-Soon, 13716 Fontanelle Place, San Diego, CA 92128, US;
CHOPIUK, Gregory, 2055 Pendrell Street, Suite 803, Vancouver, Bristish Columbia V6G 1T9, CA;
FAN, Yi, 12228 Pepper Tree Lane, Poway, CA 92064, US;
RUCKER, Paul, Vincent, 2390 Rising Glen Way Apt. 101, Carlsbad, CA 92008, US;
WANG, Zhicheng, 13012 Chambord Way, San Diego, CA 92130, US
(74) Bailey, Sam Rogerson, et al, Mewburn Ellis LLP, 33 Gutter Lane, London, EC2V 8AS, GB

(51) (8) **EP 2300472 ***
C 07D 471/04
A 61K 31/437
A 61P 5/44
A 61P 5/46
(30) US 06.06.2008. 59388
(86) PCT/US2009046058 03.06.2009.
(96) EP 09759298.4 03.06.2009. En
(87) WO2009149139 10.12.2009. 200950
(97) EP 2300472 30.03.2011. 201113 En
(54) GLUCOCORTICOID MIMETICS, METHODS OF MAKING THEM, PHARMACEUTICAL COMPOSITIONS, AND USES THEREOF
(71) Boehringer Ingelheim International GmbH, Binger Strasse 173, 55216 Ingelheim, DE;
Boehringer Ingelheim Pharma GmbH & Co. KG, Binger Strasse 173, 55216 Ingelheim, DE
(72) BOEHRINGER INGELHEIM PHARMA GMBH&CO. KG, Binger Strasse 173, 55216 Ingelheim, DE;
BETAGERI, Rajashekhar, Boehringer Ingelheim Pharmaceuticals Inc., 900 Ridgebury Road, P.O. Box 368, Ridgefield, CT 06877-0368, US;
BOSANAC, Todd, Boehringer Ingelheim Pharmaceuticals Inc., 900 Ridgebury Road, P.O. Box 368, Ridgefield, CT 06877-0368, US;
BURKE, Michael, Jason, Boehringer Ingelheim Pharmaceuticals Inc., 900 Ridgebury Road, P.O. Box 368, Ridgefield, CT 06877-0368, US;
HARCKEN, Christian, Boehringer Ingelheim Pharmaceuticals Inc., 900 Ridgebury Road, P.O. Box 368, Ridgefield, CT 06877-0368, US;
KIM, Soojin, Boehringer Ingelheim Pharmaceuticals Inc., 900 Ridgebury Road, P.O. Box 368, Ridgefield, CT 06877-0368, US;
KUZMICH, Daniel, Boehringer Ingelheim Pharmaceuticals Inc., 900 Ridgebury Road, P.O. Box 368, Ridgefield, CT 06877-0368, US;
LEE, Thomas, Wai-ho, Boehringer Ingelheim Pharmaceuticals Inc., 900 Ridgebury Road, P.O. Box 368, Ridgefield, CT 06877-0368, US;
LI, Zhibin, Boehringer Ingelheim Pharmaceuticals Inc., 900 Ridgebury Road, P.O. Box 368, Ridgefield, CT 06877-0368, US;
LIU, Pingrong, Boehringer Ingelheim Pharmaceuticals Inc., 900 Ridgebury Road, P.O. Box 368, Ridgefield, CT 06877-0368, US;
LORD, John, Boehringer Ingelheim Pharmaceuticals Inc., 900 Ridgebury Road, P.O. Box 368, Ridgefield, CT 06877-0368, US;
RAZAVI, Hossein, Boehringer Ingelheim Pharmaceuticals Inc., 900 Ridgebury Road, P.O. Box 368, Ridgefield, CT 06877-0368, US;
REEVES, Jonathan, Timothy, Boehringer Ingelheim Pharmaceuticals Inc., 900 Ridgebury Road, P.O. Box 368, Ridgefield, CT 06877-0368, US;
THOMSON, David, Boehringer Ingelheim Pharmaceuticals Inc., 900 Ridgebury Road, P.O. Box 368, Ridgefield, CT 06877-0368, US
(74) Hammann, Heinz, Boehringer Ingelheim GmbH, CD-Patents, Binger Straße 173, 55216 Ingelheim am Rhein, DE

(51) (8) **EP 2303875 ***
C 07D 471/04
A 61K 31/519
A 61P 35/00
(30) US 20.06.2008. 74188
US 13.02.2009. 152350
(86) PCT/GB2009050695 18.06.2009.
(96) EP 09766158.1 18.06.2009. En
(87) WO2009153597 23.12.2009. 200952
(97) EP 2303875 06.04.2011. 201114 En
(54) COMPOSITIONS WITH AND PROCESS FOR METHYLMORPHOLIN-SUBSITUTED PYRIDO[2,3-D]PYRIMIDINES
(71) AstraZeneca AB, 151 85 Södertälje, SE
(72) BLADE, Helen, AstraZeneca, Charter Way, Macclesfield, Cheshire SK10 2NA, GB;
CHURCHILL, Gwydion, Huw, AstraZeneca, Charter Way, Macclesfield, Cheshire SK10 2NA, GB;
CURRIE, Angela, Charlotte, AstraZeneca, Charter Way, Macclesfield, Cheshire SK10 2NA, GB;
DOBSON, Benjamin, Charles, AstraZeneca, Charter Way, Macclesfield, Cheshire SK10 2NA, GB;
HYNES, Peter, Samuel, AstraZeneca Intellectual Property, Alderley Park, Macclesfield, Cheshire SK10 4TG, GB;

KENWORTHY, Martin, Neal, AstraZeneca, Charter Way, Macclesfield, Cheshire SK10 2NA, GB;
POWELL, Lyn, AstraZeneca, Charter Way, Macclesfield, Cheshire SK10 2NA, GB;
RAW, Steven, Anthony, AstraZeneca, Charter Way, Macclesfield, Cheshire SK10 2NA, GB

(51) (8) **EP 2303880 ***
C 07D 471/04
C 07D 487/04
A 61K 31/498
A 61P 35/00
C 07D 471/14
C 07D 241/04
C 07D 213/36
C 07D 211/70
C 07D 207/20
A 61K 31/4985
(30) FR 15.07.2008. 0804014
(86) PCT/FR2009000855 10.07.2009.
(96) EP 09784263.7 10.07.2009. Fr
(87) WO2010007248 21.01.2010. 201003
(97) EP 2303880 06.04.2011. 201114 Fr
(54) NOVEL TRICYCLIC DERIVATIVES, PROCESS FOR THE PREPARATION THEREOF AND PHARMACEUTICAL COMPOSITIONS CONTAINING SAME
(71) Les Laboratoires Servier, 35, rue de Verdun, 92284 Suresnes Cedex, FR
(72) CASARA, Patrick, 740 Chemin Pré Seigneur, F-78670 Villennes sur Seine, FR;
LE DIGUARHER, Thierry, 2 rue Jean de la Fontaine, F-92500 Rueil Malmaison, FR;
DURAND, Didier, 9, Allée de la Résidence, F-78240 Chambourcy, FR;
GENESTE, Olivier, B?timent, / 17 rue Crevel Duval, F-92500 Rueil Malmaison, FR;
HICKMAN, John, 126 boulevard Pereire, F-75017 Paris, FR

(51) (8) **EP 2307409 ***
C 07D 471/04
A 61K 31/437
A 61P 35/00
(30) US 13.05.2008. 52926 P
(86) PCT/US2009043691 13.05.2009.
(96) EP 09747404.3 13.05.2009. En
(87) WO2009140320 19.11.2009. 200947
(97) EP 2307409 13.04.2011. 201115 En
(54) PYRROLOPYRIDINES AS KINASE INHIBITORS
(71) Array Biopharma, Inc., 3200 Walnut Street, Boulder, CO 80301, US
(72) LE HUEROU, Yvan, c/o Array BioPharma Inc., 3200 Walnut Street, Boulder, CO 80301, US;
BLAKE, James, F., c/o Array BioPharma Inc., 3200 Walnut Street, Boulder, CO 80301, US;
GUNWARDANA, Indrani, W., c/o Array BioPharma Inc., 3200 Walnut Street, Boulder, CO 80301, US;
MOHR, Peter, J., c/o Array BioPharma Inc., 3200 Walnut Street, Boulder, CO 80301, US;
WALLACE, Eli, M., c/o Array BioPharma Inc., 3200 Walnut Street, Boulder, CO 80301, US;
WANG, Bin, c/o Array BioPharma Inc., 3200 Walnut Street, Boulder, CO 80301, US;
CHICARELLI, Mark, c/o Array BioPharma Inc., 3200 Walnut Street, Boulder, CO 80301, US;
LYON, Michael, c/o Array BioPharma Inc., 3200 Walnut Street, Boulder, CO 80301, IS
(74) Office Freylinger, P.O. Box 48, 8001 Strassen, LU

(51) (8) **EP 2310389 ***
C 07D 471/04
A 61K 31/4192
A 61P 35/00
(30) US 22.05.2008. 128555 P
(86) PCT/US2009045058 22.05.2009.
(96) EP 09751705.6 22.05.2009. En
(87) WO2009143477 26.11.2009. 200948
(97) EP 2310389 20.04.2011. 201116 En
(54) HETEROCYCLES AS PROTEIN KINASE INHIBITORS
(71) Amgen Inc., One Amgen Center Drive M/S 28-2-C, Thousand Oaks, CA 91320-1799, US
(72) ALBRECHT, Brian, K., 179 Chestnut Street 2, Cambridge, MA 02139, US;
BELLON, Steven, 14 Greenlawn Avenue, Wellesley, MA 02139, US;
BODE, Christiane, 54 Myrtle Street, Unit 1, Sommerville, MA 02145, US;
BOEZIO, Alessandro, 54 Myrtle Street Unit 1, Somerville, MA 02145, US;
CHOQUETTE, Deborah, 17 Blakely Road, Medford, MA 02155, US;
HARMANGE, Jean-Christophe, 57 William Street, Andover, MA 01810, US
(74) Grünecker, Kinkeldey, Stockmair & Schwanhäusser, Anwaltssozietät, Leopoldstrasse 4, 80802 München, DE

(51) (8) **EP 2313407 ***
C 07D 471/04
C 07D 487/04
C 07D 519/00
A 61K 31/437
A 61P 35/00
(30) US 14.08.2008. 88959 P
US 25.11.2008. 117910 P
US 17.03.2009. 161007 P
(86) PCT/US2009053913 14.08.2009.
(96) EP 09791542.5 14.08.2009. En
(87) WO2010019899 18.02.2010. 201007
(97) EP 2313407 27.04.2011. 201117 En
(54) cMET INHIBITORS
(71) Takeda Pharmaceutical Company Limited, 1-1 Doshomachi 4-chome, Chuo-ku, Osaka-shi, Osaka 541-0045, JP
(72) BRESSI, Jerome, C., c/o Takeda San Diego Inc., 10410 Science Center Drive, San Diego, CA 92121, US;
CHU, Shaosong, c/o Takeda San Diego Inc., 10410 Science Center Drive, San Diego, CA 92121, US;
ERICKSON, Philip, c/o Takeda San Diego Inc., 10410 Science Center Drive, San Diego, CA 92121, US;
KOMANDLA, Mallareddy, c/o Takeda San Diego Inc., 10410 Science Center Drive, San Diego, CA 92121, US;
KWOK, Lily, c/o Takeda San Diego Inc., 10410 Science Center Drive, San Diego, CA 92121, US;
LAWSON, John, D., c/o Takeda San Diego Inc., 10410 Science Center Drive, San Diego, CA 92121, US;

STAFFORD, Jeffrey, A., c/o Takeda San Diego Inc., 10410 Science Center Drive, San Diego, CA 92121, US;
WALLACE, Michael, B., c/o Takeda San Diego Inc., 10410 Science Center Drive, San Diego, CA 92121, US;
ZHANG, Zhiyuan, c/o Takeda San Diego Inc., 10410 Science Center Drive, San Diego, CA 92121, US;
DAS, Sanjib, c/o Takeda San Diego Inc., 10410 Science Center Drive, San Diego, CA 92121, US
(74) Duncan, Garreth Andrew, D Young & Co LLP, 120 Holborn, London, EC1N 2DY, GB

(51) (8) **EP 2321312 ***
C 07D 471/04
(30) SI 31.07.2008. 200800190
(86) PCT/SI2009000032 30.07.2009.
(96) EP 09788631.1 30.07.2009. SI
(87) WO2010014047 04.02.2010. 201005
(97) EP 2321312 18.05.2011. 201120 En
(54) PROCESS FOR THE PREPARATION OF PALIPERIDONE
(71) Krka, D.D., Novo Mesto, Marjeska cesta 6, 8501 Novo mesto, SI
(72) RUZIC, Milo, Milke Kerinove 9, 3000 Celje, SI;
PRUDIC, Darja, Smolenja vas 68c, 8000 Novo mesto, SI;
PECAVAR, Anica, Gotna vas 18, 8000 Novo mesto, SI;
SMRKOLJ, Matej, Orehovica 4, 1411 Izlake, Zagorje ob Savi, SI
(74) Redensek, Vladimira, Patentna Pisarna d.o.o., Copova 14, P.O. Box 1725, 1001 Ljubljana, SI

(51) (8) **EP 2321313 ***
C 07D 471/04
A 61K 31/519
A 61P 31/10
A 61P 17/14
A 61P 25/00
(30) EP 26.06.2008. 08290618
(86) PCT/IB2009006460 25.06.2009.
(96) EP 09769670.2 25.06.2009. En
(87) WO2009156859 30.12.2009. 200953
(97) EP 2321313 18.05.2011. 201120 En
(54) SUBSTITUTED PYRIMIDO [2, 1-A]ISOQUINOLIN-4-ONE DERIVATIVES
(71) Mitsubishi Tanabe Pharma Corporation, 2-6-18, Kitahama Chuo-ku, Osaka-shi, Osaka 541-8505, JP;
Sanofi-Aventis, 174 Avenue de France, 75013 Paris, FR
(72) LOCHEAD, Alistair, Patent Department, c/o sanofi-aventis, 174 Avenue de France, 75013 Paris, FR;
SAADY, Mourad, Patent Department, c/o sanofi-aventis, 174 Avenue de France, 75013 Paris, FR;
YAICHE, Philippe, c/o sanofi-aventis, Departement Brevets, 174 avenue de France, 75013 Paris, FR
(74) Tinel, Marie-Line, et al, Sanofi-Aventis, Département Brevets, 174, avenue de France, F-75013 Paris, FR

(51) (8) **EP 2321314 ***
C 07D 471/04
A 61K 31/519
A 61P 25/00
(30) EP 26.06.2008. 08290614
(86) PCT/IB2009006486 25.06.2009.
(96) EP 09769672.8 25.06.2009. En
(87) WO2009156861 30.12.2009. 200953
(97) EP 2321314 18.05.2011. 201120 En
(54) SUBSTITUTED PYRIMIDONE DERIVATIVES
(71) Mitsubishi Tanabe Pharma Corporation, 2-6-18, Kitahama Chuo-ku 3-chome, Osaka-shi, Osaka 541-8505, JP;
Sanofi-Aventis, 174 Avenue de France, 75013 Paris, FR
(72) LOCHEAD, Alistair, c/o Sanofi-aventis, 174 Avenue de France, F-75013 Paris, FR;
SAADY, Mourad, c/o Sanofi-aventis, 174 Avenue de France, F-75013 Paris, FR;
YAICHE, Philippe, c/o Sanofi-aventis, 174 Avenue de France, F-75013 Paris, FR
(74) Tinel, Marie-Line, et al, Sanofi-Aventis, Département Brevets, 174, avenue de France, F-75013 Paris, FR

(51) (8) **EP 2321315 ***
C 07D 471/04
A 61K 31/519
A 61P 25/00
(30) EP 26.06.2008. 08290615
(86) PCT/IB2009006568 25.06.2009.
(96) EP 09769675.1 25.06.2009. En
(87) WO2009156864 30.12.2009. 200953
(97) EP 2321315 18.05.2011. 201120 En
(54) SUBSTITUTED ALKYL PYRIMIDIN-4-ONE DERIVATIVES
(71) Mitsubishi Tanabe Pharma Corporation, 2-6-18, Kitahama Chuo-ku, Osaka-shi, Osaka 541-8505, JP;
Sanofi-Aventis, 174 Avenue de France, 75013 Paris, FR
(72) FAYOL, Aude, Patent Department, c/o Sanofi-Aventis, 174 avenue de France, F-75013 Paris, FR;
LOCHEAD, Alistair, Patent Department, c/o Sanofi-Aventis, 174 avenue de France, F-75013 Paris, FR;
SAADY, Mourad, Patent Department, c/o Sanofi-Aventis, 174 avenue de France, F-75013 Paris, FR;
VACHE, Julien, Patent Department, c/o Sanofi-Aventis, 174 avenue de France, F-75013 Paris, FR;
YAICHE, Philippe, Patent Department, c/o Sanofi-Aventis, 174 avenue de France, F-75013 Paris, FR
(74) Tinel, Marie-Line, et al, Sanofi-Aventis, Département Brevets, 174, avenue de France, F-75013 Paris, FR

(51) (8) **EP 2321316 ***
C 07D 471/04
A 61K 31/519
A 61P 25/00
(30) EP 26.06.2008. 08290613
(86) PCT/IB2009006576 25.06.2009.
(96) EP 09769676.9 25.06.2009. En
(87) WO2009156865 30.12.2009. 200953
(97) EP 2321316 18.05.2011. 201120 En
(54) SUBSTITUTED PYRIMIDIN-4-ONE DERIVATIVES
(71) Mitsubishi Tanabe Pharma Corporation, 2-6-18 Kitahama, Chuo-Ku, Osaka-shi, Osaka 541-8505, JP;
Sanofi-Aventis, 174 Avenue de France, 75013 Paris, FR
(72) FAYOL, Aude, Patent Department, c/o sanofi-aventis, 174 avenue de France, F-75013 Paris, FR;
LOCHEAD, Alistair, Patent Department, c/o sanofi-aventis, 174 avenue de France, F-75013 Paris, FR;
SAADY, Mourad, Patent Department, c/o sanofi-aventis, 174 avenue de France, F-75013 Paris, FR;
VACHE, Julien, Patent Department, c/o sanofi-aventis, 174 avenue de France, F-75013 Paris, FR;

YAICHE, Philippe, Patent Department, c/o sanofi-aventis, 174 avenue de France, F-75013 Paris, FR
(74) Tinel, Marie-Line, et al, Sanofi-Aventis, Département Brevets, 174, avenue de France, F-75013 Paris, FR

(51) (8) **EP 2297147 ***
C 07D 471/08
A 61K 31/439
A 61P 31/04
(30) FR 29.04.2008. 0802395
(86) PCT/IB2009005391 24.04.2009.
(96) EP 09738455.6 24.04.2009. Fr
(87) WO2009133442 05.11.2009. 200945
(97) EP 2297147 23.03.2011. 201112 Fr
(54) AZABICYCLIC COMPOUNDS, PREPARATION THEREOF AND USE OF SAME AS DRUGS, ESPECIALLY BETA-LACTAMASE INHIBITORS
(71) NOVEXEL, 102 Avenue Gaston Roussel, 93230 Romainville, FR
(72) LEDOUSSAL, BenoSt, 34 rue des Roches, F-77580 Bouleurs, FR;
GOURDEL, Marie-Edith, 43 rue Grande, F-77176 Savigny le Temple, FR
(74) Hirsch & Associés, 58, avenue Marceau, 75008 Paris, FR

(51) (8) **EP 2300473 ***
C 07D 471/08
A 61K 31/551
A 61P 25/00
C 07D 243/08
C 07D 211/58
A 61P 25/28
A 61P 25/18
(30) FR 02.06.2008. 0802995
(86) PCT/FR2009051039 02.06.2009.
(96) EP 09769519.1 02.06.2009. Fr
(87) WO2009156678 30.12.2009. 200953
(97) EP 2300473 30.03.2011. 201113 Fr
(54) FUMARATE SALT OF 4-BROMOPHENYL 1,4-DIAZABICYCLO[3.2.2]NONANE-4-CARBOXYLATE, CRYSTALLINE FORMS THEREOF, PREPARATION THEREOF AND THERAPEUTIC USE THEREOF
(71) Sanofi-Aventis, 174 Avenue de France, 75013 Paris, FR
(72) ROBERT, Benoit, c/o Sanofi-Aventis, Département Brevets, 174 Avenue de France, F-75013 Paris, FR;
SALLE, Laurent, c/o Sanofi-Aventis, Département Brevets, 174 Avenue de France, F-75013 Paris, FR
(74) Morel-Pécheux, Muriel, et al, Sanofi-Aventis, Département Brevets, 174 avenue de France, 75013 Paris, FR

(51) (8) **EP 2300474 ***
C 07D 471/10
C 07D 498/20
A 61P 25/22
A 61P 25/24
A 61P 29/00
(30) GB 01.05.2008. 0808030
(86) PCT/EP2009055190 29.04.2009.
(96) EP 09738179.2 29.04.2009. En
(87) WO2009133135 05.11.2009. 200945
(97) EP 2300474 30.03.2011. 201113 En
(54) SPIRO (PIPERIDINE-4, 2 ' -PYRROLIDINE) -1- (3, 5- TRIFLUOROMETHYL PHENYL) METHYLCARBOXAMIDES AS NK1 TACHIKYNIN RECEPTOR ANTAGONISTS
(71) Glaxo Wellcome Manufacturing Pte Ltd, 1 Pioneer Sector 1, Jurong 628413, SG
(72) ALVARO, Giuseppe, GlaxoSmithKline, via Alessandro Fleming 2, I-37135 Verona, IT;
CASTIGLIONI, Emiliano, GlaxoSmithKline, via Alessandro Fleming 2, I-37135 Verona, IT;
MARASCO, Agostino, GlaxoSmithKline, via Alessandro Fleming 2, I-37135 Verona, IT
(74) Pezzoli, Anna, GlaxoSmithKline, 980 Great West Road, Brentford, Middlesex, TW8 9GS, GB

(51) (8) **EP 2300475 ***
C 07D 471/14
A 61K 31/437
A 61P 35/00
(30) US 11.06.2008. 60746 P
US 28.01.2009. 148001 P
(86) PCT/US2009003492 10.06.2009.
(96) EP 09762894.5 10.06.2009. En
(87) WO2009151598 17.12.2009. 200951
(97) EP 2300475 30.03.2011. 201113 En
(54) DIAZACARBAZOLES AND METHODS OF USE
(71) Genentech, Inc., 1 DNA Way, South San Francisco, CA 94080, US
(72) DYKE, Hazel, Joan, Argenta Discovery Ltd., 8/9 Spire Green Centre, Flex Meadow, Harlow, Essex CM195TR, GB;
ELLWOOD, Charles, Argenta Discovery Ltd., 8/9 Spire Green Centre, Flex Meadow, Harlow, Essex CM195TR, GB;
GANCIA, Emanuela, Argenta Discovery Ltd., 8/9 Spire Green Centre, Flex Meadow, Harlow, Essex CM195TR, GB;
GAZZARD, Lewis, J., 2552 Belmont Canyon Road, Belmont, CA 94002, US;
GOODACRE, Simon, Charles, Argenta Discovery Ltd., 8/9 Spire Green Centre, Flex Meadow, Harlow, Essex CM195TR, GB;
KINTZ, Samuel, S., 3811 Farm Hill Blvd., Redwood City, CA 94061, US;
LYSSIKATOS, Joseph, P., 42 Alta Ave., Piedmont, CA 94611, US;
MACLEOD, Calum, Argenta Discovery Ltd., 8/9 Spire Green Centre, Flex Meadow, Harlow, Essex CM195TR, GB;
WILLIAMS, Karen, Argenta Discovery Ltd., 8/9 Spire Green Centre, Flex Meadow, Harlow, Essex CM195TR, GB;
CHEN, Huifen, 482 Cumberland Road, Burlingame, CA 94010, US
(74) Kiddle, Simon John, et al, Mewburn Ellis LLP, 33 Gutter Lane, London, EC2V 8AS, GB

(51) (8) **EP 2303882 ***
C 07D 471/14
A 61K 31/437
A 61P 35/00
C 07D 471/04
C 07D 213/04
C 07D 207/32
(30) FR 12.06.2008. 0803262
(86) PCT/FR2009051100 11.06.2009.
(96) EP 09761932.4 11.06.2009. Fr
(87) WO2009150381 17.12.2009. 200951
(97) EP 2303882 06.04.2011. 201114 Fr

(54) AZACARBOLINE DERIVATIVES, PREPARATION METHOD THEREOF AND THERAPEUTIC USE OF SAME
(71) Sanofi-Aventis, 174 Avenue de France, 75013 Paris, FR
(72) ARENDT, Christopher, c/o Sanofi-Aventis, 1041 Routes 202-206, Mail Code: D-303A, Bridgewater, New Jersey 08807, US;
BABIN, Didier, c/o Sanofi-Aventis, Département Brevets, 174 avenue de France, F-75013 Paris, FR;
BEDEL, Olivier, c/o Sanofi-Aventis, Département Brevets, 174 avenue de France, F-75013 Paris, FR;
GOUYON, Thierry, c/o Sanofi-Aventis, Département Brevets, 174 avenue de France, F-75013 Paris, FR;
LEVIT, Mikhail, c/o Sanofi-Aventis, 1041 Routes 202-206, Mail Code: D-303A, Bridgewater, New Jersey 08807, US;
MIGNANI, Serge, c/o Sanofi-Aventis, Département Brevets, 174 avenue de France, F-75013 Paris, FR;
MOORCROFT, Neil, c/o Sanofi-Aventis, 1041 Routes 202-206, Mail Code: D-303A, Bridgewater, New Jersey 08807, US;
PAPIN, David, c/o Sanofi-Aventis, Département Brevets, 174 avenue de France, F-75013 Paris, FR;
LI, Ronghua, c/o Sanofi-Aventis, 1041 Routes 202-206, Mail Code: D-303A, Bridgewater, New Jersey 08807, US
(74) Morel-Pécheux, Muriel, et al, Sanofi-Aventis, Département Brevets, 174 avenue de France, 75013 Paris, FR

(51) (8) **EP 2300476 ***
C 07D 471/16
A 61K 31/4745
A 61P 31/06
(30) EP 23.05.2008. 08382018
EP 17.10.2008. 08382044
EP 17.10.2008. 08382057
(86) PCT/EP2009056177 20.05.2009.
(96) EP 09749888.5 20.05.2009. En
(87) WO2009141398 26.11.2009. 200948
(97) EP 2300476 30.03.2011. 201113 En
(54) TRICYCLIC NITROGEN CONTAINING COMPOUNDS AND THEIR USE AS ANTIBACTERIALS
(71) Glaxo Group Limited, Glaxo Wellcome House, Berkeley Avenue, Greenford, Middlesex UB6 0NN, GB
(72) ALEMPARTE-GALLARDO, Carlos, GlaxoSmithKline, Parque Tecnologico de Madrid Calle, Doctor Severo Ocha, Tres Cantos, E-28760 Madrid, ES;
BARFOOT, Christopher, GlaxoSmithKline, Gunnels Wood Road, Stevenage, Hertfordshire SG1 2NY, GB;
BARROS-AGUIRRE, David, GlaxoSmithKline, Parque Tecnologico de Madrid Calle, Doctor Severo Ocha, Tres Cantos, E-28760 Madrid, ES;
CACHO-IZQUIERDO, Monica, GlaxoSmithKline, Parque Tecnologico de Madrid Calle, Doctor Severo Ocha, Tres Cantos, E-28760 Madrid, ES;
FIANDOR ROMAN, Jose, Maria, GlaxoSmithKline, Parque Tecnologico de Madrid Calle, Doctor Severo Ocha, Tres Cantos, E-28760 Madrid, ES;
HENNESSY, Alan, Joseph, GlaxoSmithKline, Gunnels Wood Road, Stevenage, Hertfordshire SG1 2NY, GB;
PEARSON, Neil, David, GlaxoSmithKline, 1250 S. Collegeville Road, P O Box 5089, Collegeville, Pennsylvania 19426, US;
REMUINAN-BLANCO, Modesto, Jesus, GlaxoSmithKline, Parque Tecnologico de Madrid Calle, Doctor Severo Ocha, Tres Cantos, E-28760 Madrid, ES
(74) Walker, Ralph Francis, GlaxoSmithKline, Corporate Intellectual Property (CN9.25.1), 980 Great West Road, Brentford, Middlesex TW8 9GS, GB

(51) (8) **EP 2112151**
C 07D 473/00
C 07D 473/32
A 61K 31/52
A 61P 3/00
A 61P 9/00
(30) US 13.01.2005. 643796 P
US 19.08.2005. 709980 P
(96) EP 09008136.5 13.01.2006. En
(97) EP 2112151 28.10.2009. 200944 En
(54) Haloaryl substituted aminopurines, compositions thereof, and methods of treatment therewith
(71) Signal Pharmaceuticals LLC, 4550 Towne Centre Court, San Diego, CA 92121, US;
Pharmacopeia, LLC, c/o Ligand Pharmaceuticals, Inc., 10275 Science Center Drive, San Diego, CA 92121, US
(72) Albers, Ronald, 6559 Comly St., San Diego, CA 92111, US;
Ayala, Leticia, 1206 Cornerstone Blvd STE 279, Downingtown, PA 19335-5363, US;
Clareen, Steven, S., 3989 Richmond St., Apt. 102, San Diego, CA 92103, US;
Delgado Mederos,Maria, M., 7842 Embry Point, San Diego, CA 92126, US;
Hilgraf, Robert, 11568 Compass Point Drive North, Apt. 54, San Diego, CA 92126, US;
Hedge, Sayee, 8889 Caminito Plaza, Centro No. 7318, San Diego, CA 92122, US;
Hughes, Kevin, PSC 475, Box 1619, FPO, AP 96350, US;
Kois, Adam, 15644 Summer Sage, Poway, CA 92064, US;
Plantevin-Krenitsky, Veronique, 11045 Alonda Court, San Diego, CA 92126, US;
Mccarrick, Meg, 10904 Corte Luz del Sol, San Diego, CA 92130, US;
Nadolny, Lisa, 2714 Ariane Drive 13, San Diego, CA 92117, US;
Palanki, Moorthy, 602 Crest DR., Encinitas, CA 92024, US;
Sahasrabudhe, Kiran, 1100 New York Avenue, NW, Washington, DC 20005, US;
Sapienza, John, 1654 Ridge Rock Ct., Chula Vista, CA 91913, US;
Satoh, Yoshitaka, 17041 Cloudcroft DR., Poway, CA 92064, US;
Sloss, Marian, 11979 Depple Way, San Diego, CA 92128, US;
Sudbeck, Elise, 11062 Caminito Dulce, San Diego, CA 92131, US;
Wright, Jonathan, 7678 Salix Place, San Diego, CA 92129, US;
Cole, Andrew, G., 21 Abby Court, Robbinsville, NJ 08691, US;
Henderson, Ian, 62 Mountain Road, Hopewell, NJ 08525, US
(74) Ritter, Thomas Kurt, Jones Day, Prinzregentenstraße 11, 80538 München, DE

(51) (8) **EP 2289893**
C 07D 473/00
C 07D 473/32
A 61K 31/52
A 61P 3/00
A 61P 9/00
(30) US 13.01.2005. 643796 P
US 19.08.2005. 709980 P
(96) EP 10182984.4 13.01.2006. En
(97) EP 2289893 02.03.2011. 201109 En
(54) Haloaryl substituted aminopurines, compositions thereof, and methods of treatment therewith
(71) Signal Pharmaceuticals LLC, 4550 Towne Centre Court, San Diego, CA 92121, US;
Pharmacopeia, LLC, c/o Ligand Pharmaceuticals, Inc., 10275 Science Center Drive, San Diego, CA 92121, US
(72) Albers, Ronald, 6559 Comly St., San Diego, CA 92111, US;
Ayala, Leticia, 187 Fringetree Drive, West Chester, PA 19380, US;
Clareen, Steven, S., 187 Fringetree Drive, West Chester, PA 19380, US;
Delgado Mederos, Maria, M., 7842 Embry Point, San Diego, CA 92126, US;
Hilgraf, Robert, 11568 Compass Point Drive North Apt. 54, San Diego, CA 92126, US;
Hegde, Sayee, 2420 Geranium Street, San Diego, CA 92109, US;
Kois, Adam, 15644 Summer Sage, Poway, CA 92064, US;
Plantevin-Krenitsky, Veronique, 11045 Alonda Court, San Diego, CA 92126, US;
McCarrick, Meg, 10904 Corte Luz del Sol, San Diego, CA 92130, US;
Nadolny, Lisa, 2714 Ariane Drive 13, San Diego, CA 92117, US;
Palanki, Moorthy, 602 Crest DR., Encinitas, CA 92024, US;
Sahasrabudhe, Kiran, 1100 New York Avenue, NW, Washington, DC 20005, US;
Sapienza, John, 1654 Ridge Rock Ct., Chula Vista, CA 91913, US;
Satoh, Yoshitaka, 17041 Cloudcroft DR., Poway, CA 92064, US;
Sloss, Marian, 11979 Depple Way, San Diego, CA 92128, US;
Sudbeck, Elise, 11062 Caminito Dulce, San Diego, CA 92131, US;
Wright, Jonathan, 9710 Scranton Road, Suite 160, c/o BioDuro, San Diego, CA 92121, US;
Cole, Andrew, G., 21 Abby Court, Robbinsville, NJ 08691, US;
Henderson, Ian, 62 Mountain Road, Hopewell, NJ 08525, US;
Hughes, Kevin, PSC 475, Box 1619, FPO, AP, 96350, US
(74) Ritter, Thomas Kurt, et al, Jones Day, Prinzregentenstraße 11, 80538 München, DE

(51) (8) **EP 2301937**
C 07D 473/06
A 61K 31/522
(30) US 16.06.2005. 691408 P
(96) EP 10011665.6 14.06.2006. En
(97) EP 2301937 30.03.2011. 201113 En
(54) Prodrugs of A2b adenosine receptor antagonists
(71) CV THERAPEUTICS, INC., 3172 Porter Drive, Palo Alto, CA 94304, US
(72) Koltun, Dmitry, 1075 Grebe Street, Foster City, CA 94404, US;
Zablocki, Jeff, 490 Raquel Court, Los Altos, CA 94022, US;
Kalla, Rao, 125 Connemara Way, Sunnyvale, CA 94087, US
(74) Schnappauf, Georg, et al, Patentanwälte Rechtsanwälte, Partnerschaftsgesellschaft, Geibelstrasse 6, 81679 München, DE

(51) (8) **EP 2303884 ***
C 07D 473/34
A 61K 31/52
A 61P 25/00
A 61P 29/00
(30) EP 30.06.2008. 08011782
(86) PCT/EP2009004675 29.06.2009.
(96) EP 09772129.4 29.06.2009. En
(87) WO2010000429 07.01.2010. 201001
(97) EP 2303884 06.04.2011. 201114 En
(54) ADENINE RECEPTOR LIGANDS
(71) Rheinische Friedrich-Wilhelms-Universität Bonn, Regina-Pacis-Weg 3, 53113 Bonn, DE
(72) MÜLLER, Christa, Buschstrasse 52, 53113 Bonn, DE;
BORRMANN, Thomas, Rochusstr. 319, 53123 Bonn, DE;
ABDELRAHMAN, Aliaa, Endenicher Allee 21, 53121 Bonn, DE
(74) Bülle, Jan, et al, Patentanwälte Kutzenberger & Wolff, Theodor-Heuss-Ring 23, 50668 Köln, DE

(51) (8) **EP 2318410 ***
C 07D 487/02
A 61K 31/519
(30) US 09.07.2008. 79179 P
(86) PCT/US2009050055 09.07.2009.
(96) EP 09764343.1 09.07.2009. En
(87) WO2010006130 14.01.2010. 201002
(97) EP 2318410 11.05.2011. 201119 En
(54) NEW SMALL-MOLECULE PDE-10 INHIBITORS
(71) Envivo Pharmaceuticals, Inc., 480 Arsenal Street, Bldg. 1, Watertown, MA 02472, US
(72) RIPKA, Amy, 1446 Main Street, Reading, MA 01867, US;
SHAPIRO, Gideon, 5507 Nw 80th Avenue, Gainsville, FL 32653, US;
CHESWORTH, Richard, 88 Kingston Street, Unit 5F, Boston, MA 02111, US
(74) Harrison Goddard Foote, 4th Floor, Merchant Exchange, 17-19 Whitworth Street West, Manchester, M1 5WG, GB

(51) (8) **EP 2069348 ***
C 07D 487/04
A 61K 31/519
A 61P 35/00
(30) US 04.10.2006. 543182
(86) PCT/US2007021273 02.10.2007.
(96) EP 07839217.2 02.10.2007. En
(87) WO2008045266 17.04.2008. 200816
(97) EP 2069348 17.06.2009. 200925 En
(54) NOVEL PYRAZOLOPYRIMIDINES AS CYCLIN DEPENDENT KINASE INHIBITORS
(71) Schering Corporation, 2000 Galloping Hill Road, Kenilworth, NJ 07033, US
(72) GUZI, Timothy, J., 84 Ruddock Road, Sudbury, MA 01776, US;

PARUCH, Kamil, 20 Third Avenue, Garwood, NJ 07027, US;
DWYER, Michael, P., 235 Katherine Street, Scotch Plains, NJ 07076, US;
SIDDIQUI, M., Arshad, 10 Ohio Avenue, Newton, MA 02464, US;
REDDY, Panduranga, Adulla, P., 32 Bubbling Brook Road, Walpole, MA 02081, US;
BELANGER, David, B., 27 Chalk Street, 2, Cambridge, MA 02139, US;
HAMANN, Blake, 15 Alden Road, Watertown, MA 02472, US;
CURRAN, Patrick, J., 300 Governor's Drive, Apt. 23, Winthrop, MA 02152, US
(74) UEXKÜLL & STOLBERG, Patentanwälte, Beselerstrasse 4, 22607 Hamburg, DE

(51) (8) **EP 2069349 ***
C 07D 487/04
A 61K 31/519
A 61P 35/00
(30) US 04.10.2006. 542920
(86) PCT/US2007021274 02.10.2007.
(96) EP 07839218.0 02.10.2007. En
(87) WO2008045267 17.04.2008. 200816
(97) EP 2069349 17.06.2009. 200925 En
(54) PYRAZOLOPYRIMIDINES AS CYCLIN DEPENDENT KINASE INHIBITORS
(71) Schering Corporation, 2000 Galloping Hill Road, Kenilworth, NJ 07033-0530, US
(72) GUZI, Timothy, J., 84 Ruddock Road, Sudbury, MA 01776, US;
PARUCH, Kamil, 20 Third Avenue, Garwood, NJ 07027, US;
DWYER, Michael, P., 235 Katherine Street, Scotch Plains, NJ 07076, US;
LABROLI, Marc, 104 West Central Avenue, Moorestown, NJ 08057, US;
KEERTIKAR, Kartik, M., 24 Columbia Avenue, East Windsor, NJ 08520, US
(74) UEXKÜLL & STOLBERG, Patentanwälte, Beselerstrasse 4, 22607 Hamburg, DE

(51) (8) **EP 2069350 ***
C 07D 487/04
A 61K 31/519
A 61P 35/00
(30) US 04.10.2006. 542833
(86) PCT/US2007021275 02.10.2007.
(96) EP 07839219.8 02.10.2007. En
(87) WO2008045268 17.04.2008. 200816
(97) EP 2069350 17.06.2009. 200925 En
(54) NOVEL PYRAZOLOPYRIMIDINES AS CYCLIN DEPENDENT KINASE INHIBITORS
(71) Schering Corporation, 2000 Galloping Hill Road, Kenilworth, NJ 07033, US
(72) GUZI, Timothy J., 84 Ruddock Road, Sudbury, MA 01776, US;
PARUCH, Kamil, 20 Third Avenue3, Garwood, NJ 07027, US;
DWYER, Michael P., 235 Katherine Street, Scotch Plains, NJ 07076, US
(74) UEXKÜLL & STOLBERG, Patentanwälte, Beselerstrasse 4, 22607 Hamburg, DE

(51) (8) **EP 2084162 ***
C 07D 487/04
A 61K 31/5025
A 61K 31/53
A 61P 35/00
(30) US 23.10.2006. 862552 P
US 15.12.2006. 870309 P
US 24.04.2007. 913766 P
US 30.07.2007. 952840 P
(86) PCT/US2007081841 18.10.2007.
(96) EP 07844414.8 18.10.2007. En
(87) WO2008051808 02.05.2008. 200818
(97) EP 2084162 05.08.2009. 200932 En
(54) BICYCLIC TRIAZOLES AS PROTEIN KINASE MODULATORS
(71) SGX Pharmaceuticals, Inc., 10505 Roselle Street, San Diego, CA 92121, US
(72) BOUNAUD, Pierre-Yves, SGX Pharmaceuticals, Inc., 10505 Roselle Street, San Diego, California 92121, US;
SMITH, Christopher Ronald, SGX Pharmaceuticals, Inc., 10505 Roselle Street, San Diego, California 92121, US;
JEFFERSON, Elizabeth Anne, SGX Pharmaceuticals, Inc., 10505 Roselle Street, San Diego, California 92121, US
(74) Burnside, Ivan John, et al, Eli Lilly and Company Limited, Lilly Research Centre, Erl Wood Manor, Sunninghill Road, Windlesham, Surrey GU20 6PH, GB

(51) (8) **EP 2297152 ***
C 07D 487/04
A 61K 31/4985
A 61P 25/00
(30) GB 11.04.2008. 0806652
(86) PCT/EP2009054295 09.04.2009.
(96) EP 09731234.2 09.04.2009. En
(87) WO2009124996 15.10.2009. 200942
(97) EP 2297152 23.03.2011. 201112 En
(54) ANHYDROUS CRYSTAL FORM OF ORVEPITANT MALEATE
(71) Glaxo Group Limited, Glaxo Wellcome House, Berkeley Avenue, Greenford, Middlesex UB6 0NN, GB
(72) BEATO, Stefania, GlaxoSmithKline, via Alessandro Fleming 2, I-37135 Verona, IT;
SARTOR, Franco, GlaxoSmithKline, via Alessandro Fleming 2, I-37135 Verona, IT;
STEEPLES, Ian, Philip, c/o GlaxoSmithKline, Gunnels Wood Road, Stevenage Hertfordshire SG1 2NY, GB
(74) Pezzoli, Anna, GlaxoSmithKline, 980 Great West Road, Brentford, Middlesex, TW8 9GS, GB

(51) (8) **EP 2297159 ***
C 07D 487/04
A 61K 31/5025
A 61P 7/02
(30) GB 16.05.2008. 0808947
(86) PCT/GB2009050517 13.05.2009.
(96) EP 09746113.1 13.05.2009. En
(87) WO2009138796 19.11.2009. 200947
(97) EP 2297159 23.03.2011. 201112 En
(54) SUBSTITUTED QUINAZOLINES
(71) Shire LLC, 9200 Brookfield Court, Florence, KY 41042, US
(72) GOLDING, Bernard, T., 42 Dukesfield, Shiremoor, Newcastle upon Tyne, Tyne and Wear NE27 0EZ, GB;

FRANKLIN, Richard, 3 Rosedene Gardens, Fleet, Hampshire GU51 4NQ, GB;
MACLEOD, Angus, BioFocus DPI, Chesterford Research Park, Saffron Waldon, Essex CB10 1XL, GB;
CICALA, Peter, 725 Chesterbrook Boulevard, Wayne, Pennsylvania 19087-8301, US
(74) Harrison Goddard Foote, Belgrave Hall, Belgrave Street, Leeds, LS2 8DD, GB

(51) (8) **EP 2300478 ***
C 07D 487/04
A 61K 31/519
(30) EP 02.04.2008. 08153987
(86) PCT/EP2009053907 01.04.2009.
(96) EP 09727328.8 01.04.2009. En
(87) WO2009121919 08.10.2009. 200941
(97) EP 2300478 30.03.2011. 201113 En
(54) 1-HETEROCYCLYL-1,5-DIHYDRO-PYRAZOLO[3,4-D]PYRIMIDIN-4-ONE DERIVATIVES AND THEIR USE AS PDE9A MODULATORS
(71) Boehringer Ingelheim International GmbH, Binger Straße 173, 55216 Ingelheim am Rhein, DE
(72) GIOVANNINI, Riccardo, Boehringer Ingelheim GmbH, CD Patents, Binger Strasse 173, 55216 Ingelheim Am Rhein, DE;
DORNER-CIOSSEK, Cornelia, Boehringer Ingelheim GmbH, CD Patents, Binger Strasse 173, 55216 Ingelheim Am Rhein, DE;
EICKMEIER, Christian, Boehringer Ingelheim GmbH, CD Patents, Binger Strasse 173, 55216 Ingelheim Am Rhein, DE;
FIEGEN, Dennis, Boehringer Ingelheim GmbH, CD Patents, Binger Strasse 173, 55216 Ingelheim Am Rhein, DE;
FOX, Thomas, Boehringer Ingelheim GmbH, CD Patents, Binger Strasse 173, 55216 Ingelheim Am Rhein, DE;
FUCHS, Klaus, Boehringer Ingelheim GmbH, CD Patents, Binger Strasse 173, 55216 Ingelheim Am Rhein, DE;
HEINE, Niklas, Boehringer Ingelheim GmbH, CD Patents, Binger Strasse 173, 55216 Ingelheim Am Rhein, DE;
ROSENBROCK, Holger, Boehringer Ingelheim GmbH, CD Patents, Binger Strasse 173, 55216 Ingelheim Am Rhein, DE;
SCHAENZLE, Gerhard, Boehringer Ingelheim GmbH, CD Patents, Binger Strasse 173, 55216 Ingelheim Am Rhein, DE
(74) Hammann, Heinz, et al, Boehringer Ingelheim GmbH, CD-Patents, Binger Straße 173, 55216 Ingelheim am Rhein, DE

(51) (8) **EP 2307416 ***
C 07D 487/04
A 61K 31/519
A 61P 25/00
A 61P 35/00
C 07D 519/00
(30) EP 26.06.2008. 08290616
(86) PCT/IB2009006553 25.06.2009.
(96) EP 09769674.4 25.06.2009. En
(87) WO2009156863 30.12.2009. 200953
(97) EP 2307416 13.04.2011. 201115 En
(54) SUBSTITUTED TRICYCLIC DERIVATIVES AGAINST NEURODEGENERATIVE DISEASES
(71) Mitsubishi Tanabe Pharma Corporation, 2-6-18, Kitahama Chuo-ku, Osaka-shi, Osaka 541-8505, JP;
Sanofi-Aventis, 174 Avenue de France, 75013 Paris, FR
(72) ALMARIO GARCIA, Antonio, Patent Department, c/o Sanofi-Aventis, 174 Avenue de France, F-75013 Paris, FR;
LOCHEAD, Alistair, Patent Department, c/o Sanofi-Aventis, 174 Avenue de France, F-75013 Paris, FR;
SAADY, Mourad, Patent Department, c/o Sanofi-Aventis, 174 Avenue de France, F-75013 Paris, FR;
YAICHE, Philippe, Patent Department, c/o Sanofi-Aventis, 174 Avenue de France, F-75013 Paris, FR
(74) Tinel, Marie-Line, et al, Sanofi-Aventis, Département Brevets, 174, avenue de France, F-75013 Paris, FR

(51) (8) **EP 2310392 ***
C 07D 487/04
C 07D 487/02
A 61K 31/445
A 61P 11/00
A 61P 29/00
(30) US 16.05.2008. 54093
US 22.10.2008. 107638
(86) PCT/US2009044219 15.05.2009.
(96) EP 09747723.6 15.05.2009. En
(87) WO2009140642 19.11.2009. 200947
(97) EP 2310392 20.04.2011. 201116 En
(54) TRICYCLIC ANTAGONISTS OF PROSTAGLANDIN D2 RECEPTORS
(71) Amira Pharmaceuticals, Inc., 9535 Waples Street, Suite 100, San Diego, CA 92121, US
(72) HUTCHINSON, John, Howard, 3435 Richmond Street, San Diego, CA 92103, US;
STEARNS, Brian, Andrew, 157 Beechtree Drive, Encinitas, CA 92024, US;
CLARK, Ryan, 10961 Canis Lane, San Diego, CA 92126, US
(74) Cole, William Gwyn, et al, HLBBshaw, Merlin House, Falconry Court, Baker's Lane, GB-Epping, Essex CM16 5DQ, GB

(51) (8) **EP 2313412 ***
C 07D 487/04
C 07D 471/04
C 07D 207/323
C 07D 209/40
C 07D 233/64
A 61K 31/437
(30) FR 16.06.2008. 0803334
(86) PCT/FR2009051140 16.06.2009.
(96) EP 09766078.1 16.06.2009. Fr
(87) WO2009153516 23.12.2009. 200952
(97) EP 2313412 27.04.2011. 201117 Fr
(54) NOVEL DERIVATIVES OF PYRROLOINDOLE INHIBITORS OF HSP90, COMPOSITIONS CONTAINING SAME, AND USE THEREOF
(71) Sanofi-Aventis, 174 avenue de France, 75013 Paris, FR
(72) ALASIA, Marcel, c/o sanofi-aventis, Département Brevets, 174 Avenue de France, F-75013 Paris, FR;
MINOUX, Hervé, c/o sanofi-aventis, Département Brevets, 174 Avenue de France, F-75013 Paris, FR;
RUXER, Jean-Marie, c/o sanofi-aventis, Département Brevets, 174 Avenue de France, F-75013 Paris, FR
(74) Le Coupanec, Pascale A.M.P., et al, Nony & Associés, 3, rue de Penthivre, 75008 Paris, FR

(51) (8) **EP 2313414** *
C 07D 487/04
A 61K 31/505
A 61K 31/519
A 61P 35/00
A 61P 21/00
A 61P 29/00
(30) US 08.07.2008. 79127 P
(86) PCT/US2009049983 08.07.2009.
(96) EP 09795147.9 08.07.2009. En
(87) WO2010006086 14.01.2010. 201002
(97) EP 2313414 27.04.2011. 201117 En
(54) KINASE INHIBITORS AND METHODS OF USE
(71) Intellikine, Inc., 10931 North Torrey Pines Road, Suite 103, La Jolla, CA 92037, US
(72) REN, Pingda, 4148 Twilight Ridge, San Diego, CA 92130, US;
LIU, Yi, 4841 Barlows Landing Cove, San Diego, CA 92130, US;
LI, Liansheng, 4158 Decoro Street, Apt. 3, San Diego, CA 92122, US;
CHAN, Katrina, 4026 Camino Calma, San Diego, CA 92122, US;
WILSON, Troy, Edward, 575 Old Mill Road, San Marino, CA 91108, US;
MARTIN, Michael, 2327 Caringa Way, Carlsbad, CA 92009, US;
ROMMEL, Christian, 528 Westbourne, La Jolla, CA 92037, US
(74) Vossius & Partner, Siebertstrasse 4, 81675 München, DE

(51) (8) **EP 2321321** *
C 07D 487/04
A 61K 31/505
A 61P 25/28
(30) GB 16.04.2009. 0906579
US 25.06.2008. 75538 P
(86) PCT/GB2009001605 25.06.2009.
(96) EP 09769578.7 25.06.2009. En
(87) WO2009156737 30.12.2009. 200953
(97) EP 2321321 18.05.2011. 201120 En
(54) TRIAZOLO [4, 5-D]PYRAMIDINE DERIVATIVES AND THEIR USE AS PURINE RECEPTOR ANTAGONISTS
(71) Vernalis (R&D) Limited, Oakdene Court, 613 Reading Road, Winnersh, Berkshire RG14 5UA, GB
(72) BAMFORD, Samantha, Jane, Vernalis (R&D) Limited, Oakdene Court, 613 Reading Road, Winnersh RG41 5UA, GB;
GILLESPIE, Roger, John, Vernalis (R&D) Limited, Oakdene Court, 613 Reading Road, Winnersh RG41 5UA, GB;
TODD, Richard, Simon, Vernalis (R&D) Limited, Oakdene Court, 613 Reading Road, Winnersh RG41 5UA, GB
(74) Cockerton, Bruce Roger, Carpmaels & Ransford, One Southampton Row, London, WC1B 5HA, GB

(51) (8) **EP 2305683**
C 07D 489/00
C 07D 489/08
A 61K 9/00
A 61K 31/485
(30) US 30.03.2004. 557492 P
US 13.08.2004. 601534 P
US 18.10.2004. 620072 P
US 31.01.2005. 648625 P
US 10.02.2005. 651778 P
(96) EP 10011792.8 30.03.2005. En
(97) EP 2305683 06.04.2011. 201114 En
(54) Pharmaceutical dosage form comprising oxycodone hydrochloride having less than 25 ppm 14-hydroxycodeinone
(71) EURO-CELTIQUE S.A., 2, avenue Charles de Gaulle, 1653 Luxembourg, LU
(72) Chapman, Robert, 4 Jefferson Court, Downingtown, PA 19335, US;
Rider, Lonn S., 18 Barbs Hill Road, Foster, RI 02825, US;
Hong, Qi, 31 Grape Shot Road, Sharon, MA 02607, US;
Kyle, Donald, 29 Weatherfield Drive, Newton, PA 18940, US;
Kupper, Robert, 755 Major Potter Road, East Greenwich, RI 02818, US
(74) Maiwald Patentanwalts GmbH, Elisenhof, Elisenstrasse 3, 80335 München, DE

(51) (8) **EP 2300479** *
C 07D 489/08
A 61K 31/485
A 61P 25/30
(30) DK 05.12.2008. 200801729
US 05.12.2008. 120132 P
(86) PCT/DK2009050320 04.12.2009.
(96) EP 09771286.3 04.12.2009. En
(87) WO2010063292 10.06.2010. 201023
(97) EP 2300479 30.03.2011. 201113 En
(54) NALMEFENE HYDROCHLORIDE DIHYDRATE
(71) H. Lundbeck A/S, Ottiliavej 9, 2500 Valby, DK;
Biotie Therapies Corp., Tykistökatu 6, 20520 Turku, FI
(72) LOPEZ DE DIEGO, Heidi, Hælderne 5, DK-2850 Nærum, DK;
DE FAVERI, Carla, Via dei Colli 28, I-31010 Farra di Soligo, IT;
HUBER, Florian Anton Martin, Via Zardo 5, I-36050 Bolzano Vicentino, IT
(74) Conrad, Lars Sparre, et al, H. Lundbeck A/S, Corporate Patents and Trademarks, Ottiliavej 9, 2500 Valby-Copenhagen, DK

(51) (8) **EP 2307420** *
C 07D 489/08
A 61K 31/485
A 61P 25/32
(30) EP 24.04.2008. 08155092
(86) PCT/EP2009054875 23.04.2009.
(96) EP 09734161.4 23.04.2009. En
(87) WO2009130270 29.10.2009. 200944
(97) EP 2307420 13.04.2011. 201115 En
(54) NALMEFENE DI-ESTER PRODRUGS
(71) Janssen Pharmaceutica N.V., Turnhoutseweg 30, 2340 Beerse, BE
(72) GUILLAUME, Michel, Joseph, Maurice, André, Janssen Pharmaceutica NV, Turnhoutseweg 30, B-2340 Beerse, BE;
GAEKENS, Tim, Janssen Pharmaceutica NV, Turnhoutseweg 30, B-2340 Beerse, BE
(74) Verberckmoes, Filip Gerard, Janssen Pharmaceutica N.V., J&J Patent Law Department, Turnhoutseweg 30, 2340 Beerse, BE

(51) (8) **EP 2311839**
C 07D 489/08
(30) US 30.03.2004. 557492 P
US 13.08.2004. 601534 P
US 18.10.2004. 620072 P
US 31.01.2005. 648625 P
US 10.02.2005. 651778 P
(96) EP 10011791.0 30.03.2005. En
(97) EP 2311839 20.04.2011. 201116 En
(54) Oxycodone hydrochloride composition having less than 25 ppm 14-hydroxycodeinone
(71) EURO-CELTIQUE S.A., 2, avenue Charles de Gaulle, 1653 Luxembourg, LU
(72) Chapman, Robert, 4 Jefferson Court, Downingtown PA 19335, US;
Rider, Lonn S., 18 Barbs Hill Road, Foster, RI 02825, US;
Hong, Qi, 31 Grape Shot Road, Sharon, MA 02607, US;
Kyle, Donald, 29 Weatherfield Drive, Newton, PA 18940, US;
Kupper, Robert, 755 Major Potter Road, East Greenwich, RI 02818, US
(74) Maiwald Patentanwalts GmbH, Elisenhof, Elisenstrasse 3, 80335 München, DE

(51) (8) **EP 2314589**
C 07D 489/08
A 61K 31/485
A 61P 29/00
(30) US 30.03.2004. 557492 P
US 13.08.2004. 601534 P
US 18.10.2004. 620072 P
US 31.01.2005. 648625 P
US 10.02.2005. 651778 P
(96) EP 10011793.6 30.03.2005. En
(97) EP 2314589 27.04.2011. 201117 En
(54) Process for preparing oxycodone hydrochloride having less than 25ppm 14-hydroxycodeinone
(71) EURO-CELTIQUE S.A., 2, avenue Charles de Gaulle, 1653 Luxembourg, LU
(72) Chapman, Robert, 4 Jefferson Court, Downingtown, PA 19335, US;
Rider, Lonn S., 18 Barbs Hill Road, Foster, RI 02825, US;
Hong, Qi, 31 Grape Shot Road, Sharon, MA 02607, US;
Kyle, Donald, 173 N. main Street, Yardley, PA 19067, US;
Kupper, Robert, 755 Major Potter Road, East Greenwich, RI 02818, US
(74) Maiwald Patentanwalts GmbH, Elisenhof, Elisenstrasse 3, 80335 München, DE

(51) (8) **EP 2316837**
C 07D 489/08
A 61K 31/485
A 61P 29/00
(30) US 30.03.2004. 557492 P
US 13.08.2004. 601534 P
US 18.10.2004. 620072 P
US 31.01.2005. 648625 P
US 10.02.2005. 651778 P
(96) EP 10011788.6 30.03.2005. En
(97) EP 2316837 04.05.2011. 201118 En
(54) Process for preparing oxycodone hydrochloride having less than 25ppm 14-hydroxycodeinone
(71) EURO-CELTIQUE S.A., 2, avenue Charles de Gaulle, 1653 Luxembourg, LU
(72) Chapman, Robert, 4 Jefferson Court, Downingtown, PA 19335, US;
Rider, Lonn S., 18 Barbs Hill Road, Foster, RI 02825, US;
Hong, Qi, 31 Grape Shot Road, Sharon, MA 02607, US;
Kyle, Donald, 173 N. Main Street, Yardley, PA 19067, US;
Kupper, Robert, 755 Major Potter Road, East Greenwich, RI 02818, US
(74) Maiwald Patentanwalts GmbH, Elisenhof, Elisenstrasse 3, 80335 München, DE

(51) (8) **EP 2319846**
C 07D 489/08
A 61K 31/485
A 61P 29/00
(30) US 30.03.2004. 557492 P
US 13.08.2004. 601534 P
US 18.10.2004. 620072 P
US 31.01.2005. 648625 P
US 10.02.2005. 651778 P
(96) EP 10011787.8 30.03.2005. En
(97) EP 2319846 11.05.2011. 201119 En
(54) Process for preparing oxycodone hydrochloride having less than 25ppm 14-hydroxycodeinone
(71) EURO-CELTIQUE S.A., 2, avenue Charles de Gaulle, 1653 Luxembourg, LU
(72) Chapman, Robert, 4 Jefferson Court, Downingtown, PA 19335, US;
Rider, Lonn S., 18 Barbs Hill Road, Foster, RI 02825, US;
Hong, Qi, 31 Grape Shot Road, Sharon, MA 02607, US;
Kyle, Donald, 173 N. Main Street, Yardley PA 19067, US;
Kupper, Robert, 755 Major Potter Road, East Greenwich, RI 02818, US
(74) Maiwald Patentanwalts GmbH, Elisenhof, Elisenstrasse 3, 80335 München, DE

(51) (8) **EP 2313416 ***
C 07D 491/04
(30) US 22.07.2008. 82694 P
(86) PCT/US2009051402 22.07.2009.
(96) EP 09790724.0 22.07.2009. En
(87) WO2010011748 28.01.2010. 201004
(97) EP 2313416 27.04.2011. 201117 En
(54) SYNTHETIC INTERMEDIATES AND PROCESSES
(71) BIOCRYST PHARMACEUTICALS, INC., 2910 Parkway Lake Drive, Birmingham, Alabama 35244, US
(72) CHAND, Pooran, 2190 Parkway Lake Drive, Birmingham, AL 35244, US;
WU, Minwan, 2190 Parkway Lake Drive, Birmingham, AL 35244, US;
KOTIAN, Pravin, L., 2190 Parkway Lake Drive, Birmingham, AL 35244, US;
KUMAR, V., Satish, 2190 Parkway Lake Drive, Birmingham, AL 35244, US;
LIN, Tsu-hsing, 2190 Parkway Lake Drive, Birmingham, AL 35244, US
(74) Office Freylinger, P.O. Box 48, L-8001 Strassen, LU

(51) (8) **EP 2189461**
C 07D 491/22
A 61K 31/4375
A 61P 35/00
(30) IT 11.11.2008. MI20081984
(96) EP 09175401.0 09.11.2009. It

(97) EP 2189461 26.05.2010. 201021 En
(54) Crystalline irinotecan hydrochloride and methods for the preparation thereof
(71) Antibioticos S.p.A., Strada Rivoltana, Km 6/7, 20090 Rodano (MI), IT
(72) Pozzi, Giovanni, c/o ANTIBIOTICOS S.p.A., Strada Rivoltana Km 6/7, 20090, RODANO (MI), IT;
Ghetti, Paolo, c/o ANTIBIOTICOS S.p.A., Strada Rivoltana Km 6/7, 20090, RODANO (MI), IT;
Balsamo, Gaetano, c/o ANTIBIOTICOS S.p.A., Strada Rivoltana Km 6/7, 20090, RODANO (MI), IT;
Negri, Ettore, c/o ANTIBIOTICOS S.p.A., Strada Rivoltana Km 6/7, 20090, RODANO (MI), IT;
Alpegiani, Marco, c/o ANTIBIOTICOS S.p.A., Strada Rivoltana Km 6/7, 20090, RODANO (MI), IT;
Bedeschi, Angelo, c/o ANTIBIOTICOS S.p.A., Strada Rivoltana Km 6/7, 20090, RODANO (MI), IT;
Pizzocaro, Roberta, c/o ANTIBIOTICOS S.p.A., Strada Rivoltana Km 6/7, 20090, RODANO (MI), IT
(74) Minoja, Fabrizio, Bianchetti Bracco Minoja S.r.l., Via Plinio 63, 20129 Milano, IT

(51) (8) **EP 2300480 ***
C 07D 495/04
(30) EP 24.06.2008. 08104529
(86) PCT/EP2009057228 11.06.2009.
(96) EP 09769128.1 11.06.2009. En
(87) WO2009156279 30.12.2009. 200953
(97) EP 2300480 30.03.2011. 201113 En
(54) PROCESS FOR THE PREPARATION OF CLOPIDOGREL HYDROGEN SULFATE CRYSTALLINE FORM I
(71) ZaCh System S.p.A., Via Lillo del Duca, 10, 20091 Bresso (Milano), IT
(72) SORIATO, Giorgio, Via delle Terme 22, I-37042 Caldiero (Verona), IT;
BRESCELLO, Roberto, Via S. Giovanni Bosco 15, I-35031 Abano Terme (Padova), IT;
URBANI, Daniele, Via Giovanni Amendola 3/C, I-45026 Lendinara (Rovigo), IT;
COTARCA, Livius, Via Mercato 18, I-33052 Cervignano del Friuli (Udine), IT

(51) (8) **EP 2318415 ***
C 07D 498/04
C 07D 519/00
A 61K 31/519
A 61P 3/10
A 61P 7/02
A 61P 9/04
A 61P 9/10
A 61P 9/12
A 61P 9/14
A 61P 11/00
A 61P 13/12
A 61P 25/28
A 61P 29/00
A 61P 31/02
A 61P 35/00
(30) EP 15.07.2008. 08290694
(86) PCT/EP2009004770 02.07.2009.
(96) EP 09776914.5 02.07.2009. En
(87) WO2010006704 21.01.2010. 201003
(97) EP 2318415 11.05.2011. 201119 En
(54) OXAZOLOPYRIMIDINES AS EDG-1 RECEPTOR AGONISTS
(71) Sanofi-Aventis, 174 Avenue de France, 75013 Paris, FR
(72) KADEREIT, Dieter, c/o Sanofi-Aventis Deutschland GmbH, 65926 Frankfurt am Main, DE;
SCHAEFER, Matthias, c/o Sanofi-Aventis Deutschland GmbH, 65926 Frankfurt am Main, DE;
CZECHTIZKY, Werngard, c/o Sanofi-Aventis Deutschland GmbH, 65926 Frankfurt am Main, DE
(74) Then, Johann, et al, Sanofi-Aventis Deutschland GmbH, Patent- und Lizenzabteilung, Industriepark Höchst, Gebäude K 801, 65926 Frankfurt am Main, DE

(51) (8) **EP 2321324 ***
C 07D 498/04
A 61K 31/4985
A 61P 25/00
(30) GB 05.08.2008. 0814340
(86) PCT/EP2009060089 04.08.2009.
(96) EP 09781468.5 04.08.2009. En
(87) WO2010015626 11.02.2010. 201006
(97) EP 2321324 18.05.2011. 201120 En
(54) CRYSTALLINE FORMS OF A PYRIDINE DERIVATIVE
(71) GlaxoSmithKline LLC, One Franklin Plaza, 200 North 16th Street, Philadelphia, PA 19102, US
(72) ANDERTON, Clare Louise, GlaxoSmithKline, Gunnels Wood Road, Stevenage Hertfordshire SG1 2NY, GB;
CLAPHAM, David, GlaxoSmithKline, New Frontiers Science Park South, Third Avenue, Harlow Essex CM19 5AW, GB;
LAWRENCE, Ronnie Maxwell, c/o GlaxoSmithKline, Gunnels Wood Road, Stevenage Hertfordshire SG1 2NY, GB
(74) Pezzoli, Anna, GlaxoSmithKline, Global Patents CN925.1, 980 Great West Road, Brentford, Middlesex, TW8 9GS, GB

(51) (8) **EP 2300483 ***
C 07D 498/08
A 61K 31/53
A 61P 35/00
(30) US 23.05.2008. 55661
(86) PCT/US2009044784 21.05.2009.
(96) EP 09751545.6 21.05.2009. En
(87) WO2009143317 26.11.2009. 200948
(97) EP 2300483 30.03.2011. 201113 En
(54) TRIAZINE COMPOUNDS AS P13 KINASE AND MTOR INHIBITORS
(71) Wyeth LLC, Five Giralda Farms, Madison, NJ 07940, US
(72) VENKATESAN, Aranapakam M, 97-07 63rd Road 9K, Rego Park, NY 11374, US;
CHEN, Zecheng, 2 Westgate Blvd, New City, NY 10956, US;
DEHNHARDT, Christoph M, 423 East 83rd Street Apt 4E, New York, NY 10128, US;
DOS SANTOS, Osvaldo, 35-15 34th Street Apt B22, Astoria, NY 11106, US;
DELOS SANTOS, Efren G, 38 Birchwood Terrace, Nanuet, NY 10954, US;
ZASK, Arie, 21 East 90th Street, New York, NY 10128, US;
VERHEIJEN, Jeroen C, 154 Schunnemunk Road, Highland Mills, NY 10930, US;
KAPLAN, Joshua, 10 High Avenue, Nyack, NY 10960, US;

RICHARD, David J, 64 Old Ridge Road, Warwick, NY 10990, US;
AYRAL-KALOUSTIAN, Semiramis, 484 Carrollwood Drive, Tarrytown, NY 10591, US;
MANSOUR, Tarek S, 5 Overlook Road, New City, NY 10956, US;
GOPALSAMY, Ariamala, 21 Whispering Pines Drive, Mahwah, NJ 07430, US;
CURRAN, Kevin J, 198 Foltim Way, Congers, NY 10920, US;
SHI, Mengxiao, 57 Mill Road, Eastchester, NY 10709, US
(74) Lane, Graham Mark Hamilton, Pfizer Limited, European Patent Department, Ramsgate Road, Sandwich CT13 9NJ, GB

(51) (8) **EP 2321325 ***
C 07D 498/18
C 07D 498/22
A 61K 31/395
A 61P 35/00
(30) EP 03.07.2008. 08380195
(86) PCT/EP2009058352 02.07.2009.
(96) EP 09772517.0 02.07.2009. En
(87) WO2010000817 07.01.2010. 201001
(97) EP 2321325 18.05.2011. 201120 En
(54) ANTITUMORAL MACROLIDES
(71) Pharma Mar S.A., Avda. de los Reyes, 1, Polígono Industrial La Mina-Norte, 28770 Colmenar Viejo, Madrid, ES
(72) REYES BENÍTEZ, José Fernando, Pharma Mar S.A., Avda. de los Reyes, 1 Polígono Industrial La Mina-Norte, E-28770 Colmenar Viejo - Madrid, ES;
CRESPO SUEIRO, Gloria, Pharma Mar S.A., Avda. de los Reyes, 1 Polígono Industrial La Mina-Norte, E-28770 Colmenar Viejo - Madrid, ES;
FERNÁNDEZ RODRÍGUEZ, Rogelio, Pharma Mar S.A., Avda. de los Reyes, 1 Polígono Industrial La Mina-Norte, E-28770 Colmenar Viejo - Madrid, ES;
FRANCESCH SOLLOSO, Andrés, Pharma Mar S.A., Avda. de los Reyes, 1 Polígono Industrial La Mina-Norte, E-28770 Colmenar Viejo - Madrid, ES;
CUEVAS MARCHANTE, María del Carmen, Pharma Mar S.A., Avda. de los Reyes, 1 Polígono Industrial La Mina-Norte, E-28770 Colmenar Viejo - Madrid, ES
(74) ABG Patentes, S.L., Avenida de Burgos 16D, Edificio Euromor, 28036 Madrid, ES

(51) (8) **EP 2300484 ***
C 07D 513/10
A 61K 31/4436
A 61P 25/28
(30) US 05.05.2008. 50423 P
(86) PCT/IB2009051815 04.05.2009.
(96) EP 09742523.5 04.05.2009. En
(87) WO2009136350 12.11.2009. 200946
(97) EP 2300484 30.03.2011. 201113 En
(54) NOVEL CLASS OF SPIRO PIPERIDINES FOR THE TREATMENT OF NEURODEGENERATIVE DISEASES
(71) Pfizer Inc., 235 East 42nd Street, New York, NY 10017, US
(72) BRODNEY, Michael, Aaron, Pfizer Global Research and Development, Eastern Point Road, Groton, CT 06340, US;
HELAL, Christopher, John, Pfizer Global Research and Development, Eastern Point Road, Groton, Connecticut 06340, US;
O'NEILL, Brian, Thomas, Pfizer Global Research and Development, Eastern Point Road, Groton, Connecticut 06340, US
(74) Laurent, Claire, Pfizer Limited, European Patent Department, Ramsgate Road, Sandwich, Kent CT13 9NJ, GB

(51) (8) **EP 2310396 ***
C 07D 513/18
C 07D 515/18
A 61K 31/55
A 61P 31/14
(30) EP 08.07.2008. 08159965
EP 11.07.2008. 08160254
EP 04.08.2008. 08161743
(86) PCT/EP2009004942 08.07.2009.
(96) EP 09793887.2 08.07.2009. En
(87) WO2010003658 14.01.2010. 201002
(97) EP 2310396 20.04.2011. 201116 En
(54) MACROCYCLIC INDOLE DERIVATIVES USEFUL AS HEPATITIS C VIRUS INHIBITORS
(71) Tibotec Pharmaceuticals, Eastgate Village, Eastgate, Little Island, Co Cork, IE
(72) VENDEVILLE, Sandrine, Marie, Hélne, c/o Tibotec-Virco Virology BVBA, Generaal De Wittelaan L11B3, B-2800 Mechelen, BE;
RABOISSON, Pierre, Jean-Marie, Bernard, c/o Tibotec-Virco Viroloy BVBA, Generaal De Wittelaan L11B3, B-2800 Mechelen, BE;
LIN, Tse-I, c/o Tibotec-Virco Virology BVBA, Generaal De Wittelaan L11B3, B-2800 Mechelen, BE;
THARI, Abdellah, Rue Maurice Albert Raskin 30, B-1070 Anderlecht, BE;
AMSSOMS, Katie, Ingrid, Edouard, Lijsterbessenweg 22, B-2540 Hove, BE
(74) Daelemans, Frank F.R., et al, J&J Patent Law Department, Turnhoutseweg 30, 2340 Beerse, BE

(51) (8) **EP 2297167 ***
C 07D 517/04
A 61K 31/407
A 61K 31/41
A 61P 25/18
A 61P 25/28
A 61P 25/24
(30) US 02.06.2008. 58110 P
(86) PCT/US2009003336 02.06.2009.
(96) EP 09758728.1 02.06.2009. En
(87) WO2009148564 10.12.2009. 200950
(97) EP 2297167 23.03.2011. 201112 En
(54) SELENOPHENE AND SELENAZOLE CARBOXYLIC ACID DERIVATIVES
(71) Ironwood Pharmaceuticals, Inc., 301 Binney Street, Cambridge, MA 02142, US
(72) GRAUL, Regina, 14 Pine Brook Way, Duxbury, MA 02332, US
(74) Kuhn, Daniela, COHAUSZ & FLORACK, Patent- und Rechtsanwälte, Partnerschaftsgesellschaft, Bleichstraße 14, 40211 Düsseldorf, DE

(51) (8) **EP 2307426 ***
C 07D 519/00
A 61K 31/4985
A 61K 31/4995
A 61P 19/02
(30) US 07.05.2008. 126833 P
US 20.01.2009. 145827 P
(86) PCT/EP2009055500 06.05.2009.
(96) EP 09742103.6 06.05.2009. En
(87) WO2009135885 12.11.2009. 200946
(97) EP 2307426 13.04.2011. 201115 En
(54) FUSED PYRAZINE COMPOUNDS USEFUL FOR THE TREATMENT OF DEGENERATIVE AND INFLAMMATORY DISEASES
(71) Galapagos N.V., Generaal de Wittelaan L11 A3, 2800 Mechelen, BE
(72) ANDREWS, Martin James Inglis, Galapagos NV, Generaal De Wittelaan L11A3, B-2800 Mechelen, BE;
CHAMBERS, Mark Stuart, Biofocus DPI Ltd, Chesterford Research Park, Little Chesterford, Saffron Walden CB10 1XL, GB;
VAN DE POËL, Hervé, Biofocus DPI Ltd, Chesterford Research Park, Little Chesterford, Saffron Walden CB10 1XL, GB;
BAR, Grégory Louis Joseph, Galapagos NV, Generaal De Wittelaan L11 A3, B-2800 Mechelen, BE
(74) Nichol, Maria Zenarosa, Galapagos NV, Chesterford Research Park, Saffron Walden, Essex CB10 1XL, GB

(51) (8) **EP 2129679 ***
C 07F 3/02
(30) LV 29.12.2006. 060151
(86) PCT/EP2007064648 28.12.2007.
(96) EP 07858234.3 28.12.2007. En
(87) WO2008080993 10.07.2008. 200828
(97) EP 2129679 09.12.2009. 200950 En
(54) A METHOD FOR PREPARATION OF SUBSTITUTED ADAMANTYLARYLMAGNESIUM HALIDES
(71) Grindeks, a joint stock company, 53 Krustpils Street, Riga 1057, LV
(72) Kalvinsh, Ivars, 25, Libiesu Street, Ikskile 5052, LV;
Chernobrovijs, Aleksandrs, 1-13, Parka Street, Olaine 2114, LV;
Tribulovich, Vyacheslav, 52-19, Prospekt Chkalova, Sankt-Peterburg 197022, RU;
Labeish, Vladimir, 21-293, Prospekt Kuznecova, Sankt-Peterburg 198332, RU

(51) (8) **EP 2318419 ***
C 07F 5/02
C 07F 5/04
C 07F 5/06
A 61K 38/05
A 61P 35/00
A 61P 29/00
(30) US 17.06.2008. 132244 P
US 31.03.2009. 211499 P
(86) PCT/US2009003602 16.06.2009.
(96) EP 09767050.9 16.06.2009. En
(87) WO2009154737 23.12.2009. 200952
(97) EP 2318419 11.05.2011. 201119 En
(54) BORONATE ESTER COMPOUNDS AND PHARMACEUTICAL COMPOSITIONS THEREOF
(71) Millennium Pharmaceuticals, Inc., 40 Landsdowne Street, Cambridge, MA 02139, US
(72) ELLIOTT, Eric, L., 35 N. Crescent Circuit, Brighton, MA 02135, US;
FERDOUS, Abu, J., 5 Squire Road, Winchester, MA 01890, US;
KAUFMAN, Michael, J., 230 Waltham Street, Lexington, MA 02421, US;
KOMAR, Sonja, A., 68 Thomas Street, Belmont, MA 02478, US;
MAZAIK, Debra, L., 44 Pleasant Street, Hopkinton, MA 01748, US;
MCCUBBIN, Quentin, J., 104 Cross Street, Belmont, MA 02478, US;
NGUYEN, Phoung, M., 129 Franklin Street, No. 218, Cambridge, MA 02139, US;
PALANIAPPAN, Vaithianathan, 7 Spruce Circle, Andover, MA 01810, US;
SKWIERCZYNSKI, Raymond, D., 122 Salem Street, Andover, MA 01810, US;
TRUONG, Nobel, T., 26 Stallbrook Street, Milford, MA 01757, US;
VARGA, Csanad, M., 95 Jackson Street, Cambridge, MA 02140, US;
ZAWANEH, Peter, N., 854 Massachusetts Avenue, 12, Cambridge, MA 02139, US
(74) Harris, Jennifer Lucy, et al, Kilburn & Strode LLP, 20 Red Lion Street, London WC1R 4PJ, GB

(51) (8) **EP 2303897 ***
C 07F 7/22
(30) US 05.06.2008. 59142 P
(86) PCT/US2009046401 05.06.2009.
(96) EP 09759505.2 05.06.2009. En
(87) WO2009149347 10.12.2009. 200950
(97) EP 2303897 06.04.2011. 201114 En
(54) HIGH-VALENT PALLADIUM FLUORIDE COMPLEXES AND USES THEREOF
(71) President and Fellows of Harvard College, 17 Quincy Street, Cambridge, MA 02138, US
(72) RITTER, Tobias, 165 Pleasant Street, 212, Cambridge, MA 02139, US;
FURUYA, Takeru, 36 Oxford Street, 221 Conant Hall, Cambridge, MA 02138, US;
POWERS, David, 24 Highland Avenue, Apt. 18, Cambridge, Massachusetts 02139, US
(74) Chapman, Paul William, Kilburn & Strode LLP, 20 Red Lion Street, London, WC1R 4PJ, GB

(51) (8) **EP 2069370 ***
C 07F 9/02
(30) US 22.11.2006. 867065 P
(86) PCT/US2007085448 21.11.2007.
(96) EP 07868837.1 21.11.2007. En
(87) WO2008064345 29.05.2008. 200822
(97) EP 2069370 17.06.2009. 200925 En
(54) MICROORGANISM KILLING COMPOUNDS
(71) Anacor Pharmaceuticals, Inc., 1020 East Meadow Circle, Palo Alto, CA 94303, US
(72) AKAMA, Tsutomu, 933 Berkshire Ave., Sunnyvale, CA 94087, US;

BAKER, Stephen J., 1568 Begen Avenue, Mountain View, CA 94040, US;
HERNANDEZ, Vincent S., 287 Gilchrist Lane, Watsonville, CA 95076, US;
PLATTNER, Jacob J., 1016 Amito Avenue, Berkeley, CA 94705, US;
ZHANG, Yong-Kang, 5151 Westmont Avenue, San Jose, CA 95130, US;
ZHOU, Huchen, 3375 Alma Street, Apt. 179, Palo Alto, CA 94306, US
(74) Harrison Goddard Foote, Belgrave Hall, Belgrave Street, Leeds, LS2 8DD, GB

(51) (8) **EP 2308886**
C 07H 19/01
A 61K 31/7048
A 61P 3/10
C 07H 7/04
C 07H 23/00
(30) JP 20.06.2008. 2008162073
(86) PCT/JP2009061226 19.06.2009.
(96) EP 09766724.0 19.06.2009. Ja
(87) WO2009154276 23.12.2009. 200952
(97) EP 2308886 13.04.2011. 201115 En
(54) CRYSTAL OF SPIROKETAL DERIVATIVE, AND PROCESS FOR PRODUCTION THEREOF
(71) Chugai Seiyaku Kabushiki Kaisha, 5-1, Ukima 5-chome, Kita-ku, Tokyo 115-8543, JP
(72) MURAKATA, Masatoshi, c/o Chugai Seiyaku Kabushiki Kaisha, 5-1 Ukima 5-chome, Kita-ku, Tokyo 115-8543, JP;
IKEDA, Takuma, c/o Chugai Seiyaku Kabushiki Kaisha, 5-1 Ukima 5-chome, Kita-ku, Tokyo 115-8543, JP;
KIMURA, Nobuaki, c/o Chugai Seiyaku Kabushiki Kaisha, 5-1 Ukima 5-chome, Kita-ku, Tokyo 115-8543, JP;
KAWASE, Akira, c/o Chugai Seiyaku Kabushiki Kaisha, 5-1 Ukima 5-chome, Kita-ku, Tokyo 115-8543, JP;
NAGASE, Masahiro, c/o Chugai Seiyaku Kabushiki Kaisha, 5-1 Ukima 5-chome, Kita-ku, Tokyo 115-8543, JP;
YAMAMOTO, Keisuke, c/o Chugai Seiyaku Kabushiki Kaisha, 135 Komakado 1-chome, Gotenba-shi, Shizuoka 412-8513, JP;
TAKATA, Noriyuki, c/o Chugai Seiyaku Kabushiki Kaisha, 135 Komakado 1-chome, Gotenba-shi, Shizuoka 412-8513, JP;
YOSHIZAKI, Shinichi, c/o Chugai Seiyaku Kabushiki Kaisha, 135 Komakado 1-chome, Gotenba-shi, Shizuoka 412-8513, JP;
TAKANO, Koji, c/o Chugai Seiyaku Kabushiki Kaisha, 135 Komakado 1-chome, Gotenba-shi, Shizuoka 412-8513, JP
(74) Berryman, Natalia Grace, et al, Vossius & Partner, Sieberstr. 4, 81675 München, DE

(51) (8) **EP 2121724 ***
C 07J 41/00
(30) FR 13.12.2006. 0610853
(86) PCT/FR2007002035 11.12.2007.
(96) EP 07871830.1 11.12.2007. Fr
(87) WO2008090272 31.07.2008. 200831
(97) EP 2121724 25.11.2009. 200948 Fr
(54) NOVEL METHOD FOR THE DIASTEREOSELECTIVE PRODUCTION OF A CHIRAL PRIMARY AMINE ON A STEROID
(71) Sanofi-Aventis, 174 Avenue de France, 75013 Paris, FR
(72) BERNARD, Daniel, c/o Sanofi-aventis, Département Brevets, 174 avenue de France, F-75013 Paris, FR;
BOUSQUET-FRANCES, Joëlle, c/o Sanofi-aventis, Département Brevets, 174 avenue de France, F-75013 Paris, FR;
CAZENAVE, Gérard, c/o Sanofi-aventis, Département Brevets, 174 avenue de France, F-75013 Paris, FR;
ODDON, Gilles, c/o Sanofi-aventis, Département Brevets, 174 avenue de France, F-75013 Paris, FR;
SIMONNET, André, c/o Sanofi-aventis, Département Brevets, 174 avenue de France, 75013 PARIS, FR
(74) Weber, Mathieu, et al, Sanofi-Aventis, Département Brevets, 174, avenue de France, 75013 Paris, FR

(51) (8) **EP 2318427 ***
C 07J 41/00
C 07J 71/00
A 61K 31/573
A 61P 5/44
A 61P 27/02
(30) US 31.07.2008. 85294 P
US 16.12.2008. 122896 P
(86) PCT/EP2009058572 07.07.2009.
(96) EP 09780232.6 07.07.2009. En
(87) WO2010012567 04.02.2010. 201005
(97) EP 2318427 11.05.2011. 201119 En
(54) GLUCOCORTICOIDS ATTACHED TO NITRATE ESTERS VIA AN AROMATIC LINKER IN POSITION 21 AND THEIR USE IN OPHTHALMOLOGY
(71) Nicox S.A., Taissounires HB4, 1681 route des Dolines, BP 313, 06560 Sophia Antipolis - Valbonne, FR
(72) BENEDINI, Francesca, Via Spilamberto 16, I-20097 San Donato Milanese (Milano), IT;
BONFANTI, Annalisa, Via GaetanoDonizetti 8, I-20045 Besana in Brianza (Milano), IT;
CHIROLI, Valerio, Via Tajani 3, I-20113 Milano, IT;
STEELE, Rebecca, Via Alessandro Manzoni 5/A, I-20020 Solaro (Milano), IT;
ONGINI, Ennio, Via Fratelli Cervi, Residenza Campo, I-20090 Segrate (Milano), IT;
BIONDI, Stefano, Via Copernico 22, I-20016 Pero (Milano), IT
(74) Barchielli, Giovanna, et al, Nicox Research Institute S.r.l., Patent Department, Via Ariosto, 21, 20091 Bresso (Milano), IT

(51) (8) **EP 2297177 ***
C 07J 53/00
A 61K 31/58
A 61P 5/34
A 61P 5/42
A 61P 5/28
(30) DE 02.06.2008. 102008026793
(86) PCT/EP2009003716 26.05.2009.
(96) EP 09757194.7 26.05.2009. De
(87) WO2009146811 10.12.2009. 200950
(97) EP 2297177 23.03.2011. 201112 De
(54) C-RING-SUBSTITUTED PREGN-4-ENE-21,17-CARBOLACTONE, AND PHARMACEUTICAL PREPARATIONS COMPRISING THE LATTER
(71) Bayer Schering Pharma Aktiengesellschaft, Müllerstrasse 178, 13353 Berlin, DE
(72) RING, Sven, Ziegenhainer Oberweg 3, 07749 Jena, DE;
BOHLMANN, Rolf, Kühler Weg 6a, 14055 Berlin, DE;
KUHNKE, Joachim, Schulstr. 16, 14482 Potsdam, DE;
ZORN, Ludwig, Osianderweg 45a, 13509 Berlin, DE;

BORDEN, Steffen, Ackerstr. 80, 13355 Berlin, DE;
PRELLE, Katja, Scharfenstein 4, 40885 Ratingen, DE

(51) (8) **EP 2307439 ***
C 07J 71/00
A 61K 31/58
A 61P 5/30
(30) EP 24.07.2008. 08161108
(86) PCT/EP2009005086 14.07.2009.
(96) EP 09800008.6 14.07.2009. En
(87) WO2010009828 28.01.2010. 201004
(97) EP 2307439 13.04.2011. 201115 En
(54) ESTRATRIENE DERIVATIVES COMPRISING HETEROCYCLIC BIOISOSTERES FOR THE PHENOLIC A-RING
(71) Bayer Schering Pharma Aktiengesellschaft, Müllerstrasse 178, 13353 Berlin, DE
(72) BLUME, Thorsten, Tschaikowskistrasse 16, 16552 Schildow, DE;
HELDMANN, Dieter, Conradstr. 38, 13509 Berlin, DE;
SCHMEES, Norbert, Bondickstrasse 61, 13469 Berlin, DE;
OTTO, Christiane, Monbijouplatz 9, 10178 Berlin, DE;
WINTERMANTEL, Tim, Maybachstr. 48a, 50670 Köln, DE;
KUHNKE, Joachim, Schulstrasse 16, 14482 Potsdam, DE

(51) (8) **EP 2321337 ***
C 07K 1/18
C 07K 1/34
C 07K 1/36
(86) PCT/US2008073179 14.08.2008.
(96) EP 08797895.3 14.08.2008. En
(87) WO2010019148 18.02.2010. 201007
(97) EP 2321337 18.05.2011. 201120 En
(54) METHODS FOR REMOVING A CONTAMINANT USING INDIGENOUS PROTEIN DISPLACEMENT ION EXCHANGE MEMBRANE CHROMATOGRAPHY
(71) Genentech, Inc., 1 DNA Way, South San Francisco, CA 94080, US
(72) BROWN, Arick, 421 Moana Way, Pacifica,CA 94044, US;
BILL, Jerome, Jr., 1032 Oak Street, San Francisco,CA 94117, US;
TULLY, Timothy, 1004 Dolores Street, San Francisco,CA 94110, US;
DOWD, Christopher, 921 Anita Avenue, Belmont,CA 94002, US
(74) Walton, Seán Malcolm, et al, Mewburn Ellis LLP, 33 Gutter Lane, London, EC2V 8AS, GB

(51) (8) **EP 2230245**
C 07K 4/12
A 61K 38/03
(30) IT 09.08.2006. MI20061607
(96) EP 10156125.6 19.07.2007. En
(97) EP 2230245 22.09.2010. 201038 En
(54) Peptides having pharmacological activity for treating disorders associated with altered cell migration, such as cancer
(71) Carriero, Maria Vincenza, Via Domenico Fontana 135, 80131 Napoli, IT;
De Rosa, Mario, Via Nicolardi, 188, I-80131 Napoli, IT;
Pavone, Vincenzo, Via Crispi 31, 80121 Napoli, IT
(72) Carriero, Maria Vincenza, Via Domenico Fontana 135, 80131 Napoli, IT;
De Rosa, Mario, Via Nicolardi, 188, I-80131 Napoli, IT;
PaVONe, Vincenzo, Via Crispi 31, 80121 Napoli, IT
(74) Minoja, Fabrizio, Bianchetti Bracco Minoja S.r.l., Via Plinio 63, 20129 Milano, IT

(51) (8) **EP 2318428 ***
C 07K 7/06
A 61K 38/08
(30) EP 17.07.2008. 08380219
(86) PCT/EP2009059196 16.07.2009.
(96) EP 09780745.7 16.07.2009. En
(87) WO2010007147 21.01.2010. 201003
(97) EP 2318428 11.05.2011. 201119 En
(54) ANTICANCER COMPOUNDS
(71) Pharma Mar S.A., Avda. de los Reyes, 1, Polígono Industrial La Mina-Norte, 28770 Colmenar Viejo Madrid, ES
(72) RODRÍGUEZ ACEBES, Raquel, Pharma Mar S.a., Avda. de los Reyes 1, Polígono Industrial La Mina-Norte, E-28770 Colmenar Viejo - Madrid, ES;
FERNÁNDEZ RODRÍGUEZ, Rogelio, Pharma Mar S.a., Avda. de los Reyes 1, Polígono Industrial La Mina-Norte, E-28770 Colmenar Viejo - Madrid, ES;
REYES BENÍTEZ, José Fernando, Pharma Mar S.a., Avda. de los Reyes 1, Polígono Industrial La Mina-Norte, E-28770 Colmenar Viejo - Madrid, ES;
MARTÍN LÓPEZ, Mª Jess, Pharma Mar S.a., Avda. de los Reyes 1, Polígono Industrial La Mina-Norte, E-28770 Colmenar Viejo - Madrid, ES;
MARCO MARTÍNEZ, Isabel, Pharma Mar S.a., Avda. de los Reyes 1, Polígono Industrial La Mina-Norte, E-28770 Colmenar Viejo - Madrid, ES;
DIGÓN JUÁREZ, Isabel, Pharma Mar S.a., Avda. de los Reyes 1, Polígono Industrial La Mina-Norte, E-28770 Colmenar Viejo - Madrid, ES;
FRANCESCH SOLLOSO, Andrés, Pharma Mar S.a., Avda. de los Reyes 1, Polígono Industrial La Mina-Norte, E-28770 Colmenar Viejo - Madrid, ES;
CUEVAS MARCHANTE, María del Carmen, Pharma Mar S.a., Avda. de los Reyes 1, Polígono Industrial La Mina-Norte, E-28770 Colmenar Viejo - Madrid, ES
(74) ABG Patentes, S.L., Avenida de Burgos 16D, Edificio Euromor, 28036 Madrid, ES

(51) (8) **EP 2307446 ***
C 07K 7/64
A 61K 38/13
C 07K 1/113
(30) US 30.07.2008. 137522 P
US 31.07.2008. 84999 P
(86) PCT/CA2009000917 03.07.2009.
(96) EP 09802299.9 03.07.2009. En
(87) WO2010012073 04.02.2010. 201005
(97) EP 2307446 13.04.2011. 201115 En
(54) NONIMMUNOSUPPRESSIVE CYCLOSPORINE ANALOGUE MOLECULES
(71) Isotechnika Pharma Inc., 5120-75th Street, Edmonton, Alberta T6E 6W2, CA
(72) ABEL, Mark, D., 11530 - 9A Avenue, Edmonton, Alberta T6J 7B2, CA;
CZAJKOWSKI, David, P., 3819-86 Street NW, Edmonton, Alberta T6K 0H7, CA;

FENSKE, Bruce, W., 1156 Kane Wynd NW, Edmonton, Alberta T6L 6T6, CA;
HEGMANS, Alexander, 11813 - 13A Avenue SW, Edmonton, Alberta T6W 0E7, CA;
MCGLADE, Dave, 7416-187 Street NW, Edmonton, Alberta T5T 5W4, CA;
TREPANIER, Dan, J., 1417 Haswell Place, Edmonton, Alberta T6R 3E1, CA;
URE, Darren, R., 3912 -149A Street, Edmonton, Alberta T6R 1J8, CA;
SUGIYAMA, Shin, 20-10755 81st Avenue, Edmonton, Alberta T6E 1Y2, CA
(74) Brand, Thomas Louis, W.P. Thompson & Co., 55 Drury Lane, London WC2B 5SQ, GB

(51) (8) **EP 2297185 ***
C 07K 14/015
C 12N 5/10
C 12N 7/04
C 12N 15/864
A 61K 38/16
A 61K 39/23
A 61K 48/00
(30) EP 17.06.2008. 08158418
US 17.06.2008. 73295 P
(86) PCT/NL2009050352 17.06.2009.
(96) EP 09766870.1 17.06.2009. En
(87) WO2009154452 23.12.2009. 200952
(97) EP 2297185 23.03.2011. 201112 En
(54) PARVOVIRAL CAPSID WITH INCORPORATED GLY-ALA REPEAT REGION
(71) Amsterdam Molecular Therapeutics (AMT) B.V., Meibergdreef 61, 1105 BA Amsterdam, NL
(72) Bakker, Andrew Christian, Van Hoornekade 185, NL-3554 AV Utrecht, NL;
Sier-Ferreira, Valerie, Graan voor Visch 15416, NL-2132 EG Hoofddorp, NL;
Bosma, Sebastiaan, Menno, Ligusterlaan 7, NL-1702 KK Heerhugowaard, NL
(74) Swinkels, Bart Willem, Nederlandsch Octrooibureau, J. W. Frisolaan 13, 2517 JS Den Haag, NL

(51) (8) **EP 2310404 ***
C 07K 14/195
A 23C 9/12
(30) WO 02.07.2008. PCT/DK2008/050166
DK 31.10.2008. 200801510
(86) PCT/DK2009050157 02.07.2009.
(96) EP 09772039.5 02.07.2009. En
(87) WO2010000269 07.01.2010. 201001
(97) EP 2310404 20.04.2011. 201116 En
(54) TRANSCONJUGANTS OF LACTIC ACID BACTERIA
(71) Danmarks Tekniske Universitet, Anker Engelundsvej 1, Bygning 101 A, 2800 Kgs. Lyngby, DK
(72) HAABER, Jakob Brandt Borup, Fredensgade 15, 5., DK-2200 Copenhagen N, DK;
HAMMER, Karin, Esbern Snares Vej 6, DK-2960 Rungsted Kyst, DK;
MOINEAU, Sylvain, c/o Université Laval, Pavillon des Sciences de l'éducation, Québec, Québec G1K 7P4, CA
(74) Plougmann & Vingtoft A/S, Sundkrogsgade 9, P.O. Box 831, 2100 CopenhagenØ, DK

(51) (8) **EP 2297189 ***
C 07K 14/325
C 12N 15/82
(30) US 25.06.2008. 75719 P
US 06.03.2009. 158137 P
(86) PCT/US2009048614 25.06.2009.
(96) EP 09771002.4 25.06.2009. En
(87) WO2009158470 30.12.2009. 200953
(97) EP 2297189 23.03.2011. 201112 En
(54) TOXIN GENES AND METHODS FOR THEIR USE
(71) Athenix Corporation, 108 T W Alexander Drive, PO Box 110347, Research Triangle Park, NC 27709, US
(72) AGARWAL, Shruti, 4 Penhurst Court, Durham, NC 27713, US;
CAMPBELL, Chris, 108 Charolais Trail, Cary, North Carolina 27513, US;
MCNULTY, Brian, 1112 Tonsler Drive, Raleigh, North Carolina 276004, US;
SAMPSON, Kimberly, S., 5505 Frenchman's Creek Drive, Durham, NC 27713, US;
TOMSO, Daniel J., 114 Vista Del Rio Drive, Bahama, NC 27503, US
(74) Vaillant, Jeanne, et al, Ernest Gutmann - Yves Plasseraud S.A.S., 3, rue Auber, 75009 Paris, FR

(51) (8) **EP 2297190 ***
C 07K 14/325
C 12N 15/82
(30) US 02.07.2008. 77812 P
US 10.03.2009. 158953 P
(86) PCT/US2009049527 02.07.2009.
(96) EP 09774514.5 02.07.2009. En
(87) WO2010003065 07.01.2010. 201001
(97) EP 2297190 23.03.2011. 201112 En
(54) AXMI-115, AXMI-113, AXMI-005, AXMI-163 AND AXMI-184: VIP3A INSECTICIDAL PROTEINS FROM BACILLUS THURINGIENSIS AND METHODS FOR THEIR USE
(71) Athenix Corporation, 108 T W Alexander Drive, PO Box 110347, Research Triangle Park, NC 27709, US
(72) SAMPSON, Kimberly, S., 5505 Frenchman's Creek Drive, Durham, NC 27713, US;
AGARWAL, Shruti, 4 Penhurst Court, Durham, NC 27713, US;
CAMPBELL, Chris, 108 Charolais Trail, Cary, NC 27513, US;
MCNULTY, Brian, 1112 Tonsler Drive, Raleigh, NC 27604, US;
TOMSO, Daniel, J., 114 Vista Del Rio Drive, Bahama, NC 27503, US;
CAROZZI, Nadine, 8308 Meadow Ridge Court, Raleigh, NC 27615, US;
HARGISS, Tracy, 318 Oxfordshire Lane, Chapel Hill, NC 27517, US;
KOZIEL, Michael, G., 1601 Liatris Lane, Raleigh, NC 27613, US;
DUCK, Nicholas, B., 1227 Tartarian Trail, Apex, NC 27502, US;
HEINRICHS, Volker, 2709 Willow Pines Place, Raleigh, NC 27614, US
(74) Vaillant, Jeanne, et al, Ernest Gutmann - Yves Plasseraud S.A.S., 3, rue Auber, 75009 Paris, FR

(51) (8) **EP 2315773 ***
C 07K 14/35
A 61K 39/04
(30) US 25.07.2008. 83720 P
(86) PCT/EP2009059580 24.07.2009.
(96) EP 09781052.7 24.07.2009. En
(87) WO2010010177 28.01.2010. 201004
(97) EP 2315773 04.05.2011. 201118 En
(54) NOVEL COMPOSITIONS AND METHODS
(71) GlaxoSmithKline Biologicals S.A., rue de l'Institut, 89, 1330 Rixensart, BE;
Glaxo Group Limited, Glaxo Wellcome House, Berkeley Avenue, Greenford, Middlesex UB6 0NN, GB
(72) BROWN, James, GlaxoSmithKline, 1250 S. Collegeville Road, P O Box 5089, Collegeville, Pennsylvania 19426, US;
METTENS, Pascal, GlaxoSmithKline Biologicals s.a., Rue de l'Institut 89, B-1330 Rixensart, BE;
MURPHY, Dennis, c/o GlaxoSmithKline, 1250 S. Collegeville Road, P O Box 5089, Collegeville, Pennsylvania 19426, US
(74) Dalton, Marcus Jonathan William, GlaxoSmithKline, Corporate Intellectual Property (CN9.25.1), 980 Great West Road, Brentford, Middlesex TW8 9GS, GB

(51) (8) **EP 2297192 ***
C 07K 14/415
C 12N 15/82
A 01H 5/00
(30) EP 04.07.2008. 08159749
US 07.07.2008. 78499 P
EP 08.07.2008. 08159946
US 09.07.2008. 79158 P
EP 10.07.2008. 08160152
EP 10.07.2008. 08160149
US 11.07.2008. 79817 P
US 11.07.2008. 79868 P
EP 17.07.2008. 08160632
US 18.07.2008. 81923 P
(86) PCT/EP2009058310 02.07.2009.
(96) EP 09772494.2 02.07.2009. En
(87) WO2010000794 07.01.2010. 201001
(97) EP 2297192 23.03.2011. 201112 En
(54) PLANTS HAVING ENHANCED YIELD-RELATED TRAITS AND A METHOD FOR MAKING THE SAME BY OVEREXPRESSING A POLYNUCLEOTIDE ENCODING A TFL1-LIKE PROTEIN
(71) BASF Plant Science GmbH, 67056 Ludwigshafen, DE
(72) REUZEAU, Christophe, La Chapelle Gonauet, F-24350 Tocan Saint Apre, FR;
HATZFELD, Yves, rue des Dondaines 18C, F-59000 Lille, FR;
FRANKARD, Valerie, Avenue des Croix du Feu 84, B-1410 Waterloo, BE;
SANZ MOLINERO, Ana Isabel, Bernheimlaan 38, B-9050 Gentbrugge, BE
(74) Popp, Andreas, BASF SE, Global Intellectual Property, GVX/B-C006, 67056 Ludwigshafen, DE

(51) (8) **EP 2303919 ***
C 07K 14/415
A 23J 1/14
A 23J 3/14
A 23L 2/66
C 07K 1/28
C 07K 1/30
C 07K 1/34
(30) US 20.06.2008. 213499
(86) PCT/CA2009000855 20.06.2009.
(96) EP 09765305.9 20.06.2009. En
(87) WO2009152620 23.12.2009. 200952
(97) EP 2303919 06.04.2011. 201114 En
(54) NOVEL CANOLA PROTEIN ISOLATE
(71) Burcon Nutrascience (MB) Corp., 1388 Waller Avenue, Winnipeg, Manitoba R3T 1P9, CA
(72) SCHWEIZER, Martin, 117 Haig Avenue, Winnipeg, Manitoba R2M 0E3, CA;
GREEN, Brent, 24 Poplarwood Drive, Winnipeg Manitoba R0C 3E0O, CA;
SEGALL, Kevin, I, 31 Dunbar Crescent, Winnipeg, Manitoba R3P 0W6, CA;
WILLARDSEN, Randy, 1933 Park Oak Drive, Rosevillek, CA 95661, US
(74) Selden, Deborah Anne, Beck Greener, Fulwood House, 12 Fulwood Place, London WC1V 6HR, GB

(51) (8) **EP 2300494 ***
C 07K 14/47
A 61K 39/00
A 61K 39/395
A 61K 38/17
A 61K 38/04
A 61K 38/10
C 07K 7/08
(30) EP 15.07.2008. 08012716
(86) PCT/EP2009004883 07.07.2009.
(96) EP 09797424.0 07.07.2009. En
(87) WO2010006720 21.01.2010. 201003
(97) EP 2300494 30.03.2011. 201113 En
(54) ANTI-AMYLOID IMMUNOGENIC COMPOSITIONS, METHODS AND USES
(71) CHIESI FARMACEUTICI S.p.A., Via Palermo, 26/A, 43100 Parma, IT
(72) IMBIMBO, Bruno, Pietro, Via Palermo 26/A, I-43100 Parma, IT;
OTTONELLO, Simone, Via Palermo 26/A, I-43100 Parma, IT;
VILLETTI, Gino, Via Palermo 26/A, I-43100 Parma, IT;
MORETTO, NADIA, Via Palermo 26/A, I-43100 Parma, IT
(74) Minoja, Fabrizio, Bianchetti Bracco Minoja S.r.l., Via Plinio 63, 20129 Milano, IT

(51) (8) **EP 2313430 ***
C 07K 14/47
A 61K 51/08
(30) US 24.06.2008. 75175 P
(86) PCT/EP2009057925 24.06.2009.
(96) EP 09769304.8 24.06.2009. En
(87) WO2009156456 30.12.2009. 200953
(97) EP 2313430 27.04.2011. 201117 En
(54) MUTEINS OF HNGAL AND RELATED PROTEINS WITH AFFINITY FOR A GIVEN TARGET

(71) Technische Universität München, Arcisstrasse 21, 80333 München, DE
(72) SKERRA, Arne, Max-Lehner-Str. 19, 85354 Freising, DE;
EICHINGER, Andreas, Stadionstr. 192, 85716 Unterschleißheim, DE;
KIM, Hyun-Jin, Park Rio 214-Dong 1002-Ho, Shinchon-Dong, Songpa-Gu, Seoul, KR
(74) Schiweck, Weinzierl & Koch, European Patent Attorneys, Landsberger Straße 98, 80339 München, DE

(51) (8) **EP 2303922 ***
C 07K 14/58
G 01N 33/68
(30) WO 01.08.2008. PCT/EP2008/060188
WO 30.01.2009. PCT/EP2009/051101
(86) PCT/EP2009059982 31.07.2009.
(96) EP 09781380.2 31.07.2009. En
(87) WO2010012834 04.02.2010. 201005
(97) EP 2303922 06.04.2011. 201114 En
(54) METHOD FOR THE IN VITRO DIAGNOSIS OF STROKE
(71) Bio-Rad Pasteur, 3, boulevard Raymond Poincaré, 92430 Marnes-la-Coquette, FR
(72) GIULIANI, Isabelle, 229 Grande Rue, F-92380 Garches, FR;
LARUE, Catherine, 21 avenue Le Notre, F-92420 Vaucresson, FR;
GUEGAN, Johann, 8 bis rue du Général Noël, F-92500 Rueil Malmaison, FR
(74) Domenego, Bertrand, Cabinet Lavoix, 2, place d'Estienne d'Orves, 75441 Paris Cedex 09, FR

(51) (8) **EP 2318433 ***
C 07K 14/62
C 07K 14/46
(30) US 02.12.2008. 200612 P
US 07.08.2008. 188187 P
(86) PCT/US2009004559 07.08.2009.
(96) EP 09805295.4 07.08.2009. En
(87) WO2010016944 11.02.2010. 201006
(97) EP 2318433 11.05.2011. 201119 En
(54) ANALOGUES OF GLUCOSE-DEPENDENT INSULINOTROPIC POLYPEPTIDE (GIP) MODIFIED AT N-TERMINAL
(71) IPSEN PHARMA S.A.S., 65, Quai Georges Gorse, 92100 Boulogne-Billancourt, FR
(72) DONG, Zheng, Xin, 66 Fairview Street, Holliston, MA 01746, US
(74) Harrison Goddard Foote, 4th Floor, Merchant Exchange, 17-19 Whitworth Street West, Manchester, M1 5WG, GB

(51) (8) **EP 2129359 ***
C 07K 14/64
(30) US 30.01.2007. 898693 P
(86) PCT/US2008000917 23.01.2008.
(96) EP 08724770.6 23.01.2008. En
(87) WO2008094437 07.08.2008. 200832
(97) EP 2129359 09.12.2009. 200950 En
(54) CHIMERIC PEPTIDE ANTAGONIST FOR GPCR135 OR GPCR142
(71) Janssen Pharmaceutica, N.V., Turnhoutseweg 30, 2340 Beerse, BE
(72) KUEI, Chester, 10528 Hollingsworth Way, San Diego, CA 92127, US;
LIU, Changlu, 12537 Carmel Canyon Road, San Diego, CA 92130, US;
PUDIAK, Cindy, W., 9085 Judicial Drive 2208, San Diego, CA 92122, US;
SHELTON, Jonathan, Edward, 9115 Judicial Drive 4431, San Diego, CA 92122, US;
SUTTON, Steven, W., 6046 Paseo Alameda, Carlsbad, CA 92009, US
(74) Warner, James Alexander, et al, Carpmaels & Ransford, One Southampton Row, London, WC1B 5HA, GB

(51) (8) **EP 2297198 ***
C 07K 14/705
(30) US 30.06.2008. 133532 P
(86) PCT/US2009003886 30.06.2009.
(96) EP 09788855.6 30.06.2009. En
(87) WO2010005519 14.01.2010. 201002
(97) EP 2297198 23.03.2011. 201112 En
(54) FN14/TRAIL FUSION PROTEINS
(71) University Of Pennsylvania, Center for Technology Transfer, 3160 Chestnut Street, Suite 200, Philadelphia, PA 19140-6283, US
(72) RAZMARA, Marjaneh, 7720a Stenton Avenue 311, Philadelphia, PA 19118, US;
TYKOCINSKI, Mark, L., 300 Linden Lane, Merion Station, PA 19066, US
(74) Grünecker, Kinkeldey, Stockmair & Schwanhäusser, Anwaltssozietät, Leopoldstrasse 4, 80802 München, DE

(51) (8) **EP 2321345 ***
C 07K 14/705
C 07K 16/28
C 12N 15/62
A 61K 38/17
(30) US 28.07.2008. 84209 P
(86) PCT/US2009051990 28.07.2009.
(96) EP 09790891.7 28.07.2009. En
(87) WO2010014629 04.02.2010. 201005
(97) EP 2321345 18.05.2011. 201120 En
(54) MULTI-SPECIFIC BINDING PROTEINS TARGETING B CELL DISORDERS
(71) Emergent Product Development Seattle, LLC, 2273 Research Boulevard, Suite 400, Rockville, MD 20850, US
(72) TAN, Philip, 17409 - 53rd Place W., Lynwood, WA 98037, US;
GROSMAIRE, Laura, Sue, 19909 - 280th Avenue S.E., Hobart, WA 98025, US;
BAUM, Peter, Robert, 6027 - 34th Avenue N.E., Seattle, WA 98115, US;
THOMPSON, Peter, Armstrong, 14075 N.E. 30th Place, Bellevue, WA 98007, US
(74) Jappy, John William Graham, Gill Jennings & Every LLP, The Broadgate Tower, 20 Primrose Street, London EC2A 2ES, GB

(51) (8) **EP 2310410 ***
C 07K 14/715
C 07K 16/24
C 12N 15/62
(30) US 02.07.2008. 134095 P
US 02.07.2008. 134096 P

US 02.07.2008. 134101 P
US 02.07.2008. 134099 P
US 02.07.2008. 134097 P
US 02.07.2008. 134100 P
US 02.07.2008. 134098 P
US 20.05.2009. 180097 P
(86) PCT/US2009049603 02.07.2009.
(96) EP 09774557.4 02.07.2009. En
(87) WO2010003108 07.01.2010. 201001
(97) EP 2310410 20.04.2011. 201116 En
(54) TNF- ANTAGONIST MULTI-TARGET BINDING PROTEINS
(71) Emergent Product Development Seattle, LLC, 2273 Research Boulevard, Suite 400, Rockville, MD 20850, US
(72) LOFQUIST, Alan, Keith, 9422 N.E. 130th Place, Kirkland, WA 98034, US;
MOHLER, Kendall, Mark, 14200 Sandy Hook Road, Poulsbo, WA 98370, US;
BAUM, Peter, Robert, 6027 - 34th Avenue N.E., Seattle, WA 98115, US;
THOMPSON, Peter, Armstrong, 14075 N.E. 30th Place, Bellevue, WA 98007, US;
MISHER, Lynda, 10614 - 10th Place N.E., Seattle, WA 98125, US
(74) Jappy, John William Graham, Gill Jennings & Every LLP, The Broadgate Tower, 20 Primrose Street, London EC2A 2ES, GB

---

(51) (8) **EP 2300497 ***
C 07K 14/755
(30) EP 24.06.2008. 08158893
US 24.06.2008. 129402 P
(86) PCT/EP2009057883 24.06.2009.
(96) EP 09769279.2 24.06.2009. En
(87) WO2009156430 30.12.2009. 200953
(97) EP 2300497 30.03.2011. 201113 En
(54) A PROCESS OF PURIFYING COAGULATION FACTOR VIII
(71) Octapharma AG, Seidenstrasse 2, 8853 Lachen, CH
(72) BORGVALL, Carin, Nordenflychtsvägen 55, S-11275 Stockholm, SE;
ERICSSON, Ulrika, Nordenflychtsvägen 55, S-11275 Stockholm, SE;
GILLJAM, Gustav, Nordenflychtsvägen 55, S-11275 Stockholm, SE;
JERNBERG, Mats, Nordenflychtsvägen 55, S-11275 Stockholm, SE;
WINGE, Stefan, Nordenflychtsvägen 55, S-11275 Stockholm, SE
(74) von Kreisler, Alek, Patentanwälte, Von Kreisler-Selting-Werner, Postfach 10 22 41, 50462 Köln, DE

---

(51) (8) **EP 2318435 ***
C 07K 14/82
C 07K 19/00
A 61K 38/16
(30) US 28.08.2008. 92708 P
(86) PCT/US2009055443 28.08.2009.
(96) EP 09810692.5 28.08.2009. En
(87) WO2010025421 04.03.2010. 201009
(97) EP 2318435 11.05.2011. 201119 En
(54) MODULATORS OF MYC, METHODS OF USING THE SAME, AND METHODS OF IDENTIFYING AGENTS THAT MODULATE MYC
(71) Taiga Biotechnologies, Inc., 12635 East Montview Boulevard, Aurora, CO 80045-7336, US
(72) REFAELI, Yosef, 843 Garfield Street, Denver, Colorado 80206, US;
TURNER, Brian Curtis, 655 S. Glencoe Street, Denver, Colorado 80246, US
(74) Wilkinson, Marc George, et al, HLBBshaw, Merlin House, Falconry Court, Baker's Lane, Epping, Essex CM16 5DQ, GB

---

(51) (8) **EP 2300498 ***
C 07K 16/00
(30) US 11.07.2008. 134929 P
(86) PCT/US2009050290 10.07.2009.
(96) EP 09790293.6 10.07.2009. En
(87) WO2010006286 14.01.2010. 201002
(97) EP 2300498 30.03.2011. 201113 En
(54) CONSTRUCTS AND LIBRARIES COMPRISING ANTIBODY SURROGATE KAPPA LIGHT CHAIN SEQUENCES
(71) Sea Lane Biotechnologies,llc., 356 Selby Lane, Atherton, CA 94027, US
(72) HOROWITZ, Lawrence, 362 Selby Lane, Atherton, CA 94027, US;
BHATT, Ramesh, R., 2729 Waltham Cross, Belmont, CA 94002, US
(74) Denison, Christopher Marcus, et al, Mewburn Ellis LLP, 33 Gutter Lane, London, EC2V 8AS, GB

---

(51) (8) **EP 2303923 ***
C 07K 16/08
G 01N 33/569
A 61K 39/395
(86) PCT/IB2008002683 16.07.2008.
(96) EP 08875708.3 16.07.2008. En
(87) WO2010007463 21.01.2010. 201003
(97) EP 2303923 06.04.2011. 201114 En
(54) HUMAN CYTOMEGALOVIRUS NEUTRALISING ANTIBODIES AND USE THEREOF
(71) Humabs LLC, 1700 Owens St., Suite 515, San Francisco, CA 94158, US
(72) LANZAVECCIA, Antonio, Institute for Research in Biomedicine, Via Vincenzo Vela 6, CH-6500 Bellinzona, CH;
MACAGNO, Annalisa, Institute for Research in Biomedicine, Via Vincenzo Vela 6, CH-6500 Bellinzona, CH
(74) Tuxworth, Pamela M., J.A. Kemp & Co., 14 South Square, Gray's Inn, London WC1R 5JJ, GB

---

(51) (8) **EP 2294084 ***
C 07K 16/10
A 61P 31/16
G 01N 33/569
G 01N 33/577
(30) IT 27.05.2008. TO20080398
(86) PCT/IB2009052212 27.05.2009.
(96) EP 09754293.0 27.05.2009. It
(87) WO2009144667 03.12.2009. 200949
(97) EP 2294084 16.03.2011. 201111 En
(54) MONOCLONAL ANTIBODIES HAVING HOMOSUBTYPE CROSS -NEUTRALIZATION

PROPERTIES AGAINST INFLUENZA A VIRUSES SUBTYPE H1
(71) Pomona Ricerca S.R.L., Corso Rinaudi 1, 10100 Torino, IT
(72) BURIONI, Roberto, Piazza Ferrari 22, I-47900 Rimini, IT;
CLEMENTI, Massimo, Via Fratelli Bronzetti 14, I-20129 Milano, IT
(74) Comoglio, Elena, et al, Jacobacci & Partners S.p.A., Corso Emilia 8, 10152 Torino, IT

(51) (8) **EP 2314620**
C 07K 16/10
A 61K 39/395
A 61P 31/14
C 12N 15/13
C 12N 15/63
C 12N 5/10
(30) US 27.05.2004. 575023 P
WO 25.01.2005. PCT/EP2005/050310
WO 03.11.2004. PCT/EP2004/052772
WO 23.09.2004. PCT/EP2004/052286
WO 29.07.2004. PCT/EP2004/051661
WO 27.05.2004. PCT/EP2004/050943
WO 03.03.2005. PCT/EP2005/050953
(96) EP 10180375.7 26.05.2005. En
(97) EP 2314620 27.04.2011. 201117 En
(54) Binding molecules capable of neutralizing rabies virus and uses thereof
(71) Crucell Holland B.V., Archimedesweg 4, 2333 CN Leiden, NL
(72) Bakker, Alexander, Berthold, Hendrik, Archimedesweg 4-6, 2333 CN, Leiden, NL;
Marissen, Willem Egbert, Archimedesweg 4-6, 2333 CN, Leiden, NL;
Kramer, Robert Arjen, Archimedesweg 4-6, 2333 CN, Leiden, NL;
De Kruif, Cornelis Adriaan, Archimedesweg 4-6, 2333 CN, Leiden, NL
(74) Manten, Annemieke, et al, Crucell Holland B.V., Archimedesweg 4-6, NL-2333 CN Leiden, NL

(51) (8) **EP 2314621**
C 07K 16/10
A 61K 39/395
A 61P 31/14
C 12N 15/13
C 12N 15/63
C 12N 5/10
(30) US 27.05.2004. 575023 P
WO 25.01.2005. PCT/EP2005/050310
WO 03.11.2004. PCT/EP2004/052772
WO 23.09.2004. PCT/EP2004/052286
WO 29.07.2004. PCT/EP2004/051661
WO 27.05.2004. PCT/EP2004/050943
WO 03.03.2005. PCT/EP2005/050953
(96) EP 10180398.9 26.05.2005. En
(97) EP 2314621 27.04.2011. 201117 En
(54) Binding molecules capable of neutralizing rabies virus and uses thereof
(71) Crucell Holland B.V., Archimedesweg 4, 2333 CN Leiden, NL
(72) Bakker, Alexander, Berthold, Hendrik, Archimedesweg 4-6, 2333 CN, Leiden, NL;
Marissen, Willem Egbert, Archimedesweg 4-6, 2333 CN, Leiden, NL;
De Kruif, Cornelis Adriaan, Archimedesweg 4-6, 2333 CN, Leiden, NL;
Kramer, Robert Arjen, Archimedesweg 4-6, 2333 CN, Leiden, NL
(74) Manten, Annemieke, et al, Crucell Holland B.V., Archimedesweg 4-6, NL-2333 CN Leiden, NL

(51) (8) **EP 2319868**
C 07K 16/18
A 61K 39/395
A 61K 39/00
A 61P 9/10
A 61K 31/33
G 01N 33/68
G 01N 33/53
C 07K 14/775
(30) GB 02.09.2005. 0517878
(96) EP 10075572.7 04.09.2006. En
(97) EP 2319868 11.05.2011. 201119 En
(54) Immunotherapeutic treatment for inducing the regression of atherosclerotic plaques
(71) BioInvent International AB, Sölvegatan 41, 223 70 Lund, SE
(72) Carlsson, Roland, (deceased), SE;
Nilsson, Jan, Toppeladug?rd 3, 240 13 Genarp, SE
(74) Didmon, Mark, Potter Clarkson LLP, Park View House, 58 The Ropewalk, Nottingham NG1 5DD, GB

(51) (8) **EP 2319869**
C 07K 16/18
A 61K 49/00
C 07K 16/46
G 01N 33/15
G 01N 33/50
G 01N 33/53
C 12N 15/09
(30) JP 20.06.2008. 2008162565
(86) PCT/JP2009054473 09.03.2009.
(96) EP 09766473.4 09.03.2009. Ja
(87) WO2009154025 23.12.2009. 200952
(97) EP 2319869 11.05.2011. 201119 En
(54) ANTIBODY AGAINST OXIDIZED LDL/ß²GPI COMPLEX AND USE OF THE SAME
(71) National University Corporation Okayama University, 1-1, Tsushima-Naka 1-chome, Kita-ku, Okayama-shi, Okayama 700-8530, JP;
Medical and Biological Laboratories Co., Ltd., 5-3, Sakae 4-chome, Naka-ku, Nagoya-shi, Aichi 460-0008, JP
(72) MATSUURA, Eiji, c/o NATIONAL UNIVERSITY CORPORATION, OKAYAMA UNIVERSITY, Graduate School of Medicine, Dentistry and Pharmaceutical Sciences, 5-1, Shikata-cho 2-chome, Okayama-shi, Okayama 700-8558, JP;
KOJIMA, Kazuo, c/o MEDICAL AND BIOLOGICAL LABORATORIES CO. LTD., 1063-103, Terasawaoka, Ina-shi, Nagano 396-0002, JP
(74) Plougmann & Vingtoft A/S, Sundkrogsgade 9, P.O. Box 831, 2100 CopenhagenØ, DK

(51) (8) **EP 2321348 ***
C 07K 16/18
(30) US 09.07.2008. 79379 P
(86) PCT/IB2009006666 09.07.2009.
(96) EP 09786187.6 09.07.2009. En
(87) WO2010004434 14.01.2010. 201002
(97) EP 2321348 18.05.2011. 201120 En
(54) METHOD OF PROMOTING NEUROGENESIS
(71) University of Zürich, Raemistrasse 71, 8006 Zürich, CH
(72) NITSCH, Roger, Langwisstrasse 27, CH-CH 8126 Zumikon, CH;
LINDVALL, Olle, Wallenberg Neuroscience Center, Bmc A11, University Hospital, S-221 84 Lund, SE;
BISCARO, Barbara, Klingenstrasse 9, CH 8005 Zurich, CH;
EKDAHL, Christine, Wallenberg Neuroscience Center, Bmc A11, University Hospital, S-221 84 Lund, SE
(74) Steinecke, Peter, Müller Fottner Steinecke, Rechtsanwälte - Patentanwälte, Technologiezentrum Jülich, Karl-Heinz-Beckurts-Strasse 13, 52428 Jülich, DE

(51) (8) **EP 2307456 ***
C 07K 16/22
A 61K 39/395
(30) US 27.06.2008. 76431 P
(86) PCT/US2009048514 24.06.2009.
(96) EP 09770965.3 24.06.2009. En
(87) WO2009158432 30.12.2009. 200953
(97) EP 2307456 13.04.2011. 201115 En
(54) ANG-2 INHIBITION TO TREAT MULTIPLE SCLEROSIS
(71) Amgen Inc., One Amgen Center Drive, Thousand Oaks, CA 91320, US
(72) KIRCHNER, Jacqueline, A., 10366 44th Avenue N.E., Seattle, WA 98125, US;
MUSTELIN, Tomas, Mikael, 1554 28th Avenue West, Seattle, WA 98199, US
(74) Care, Alison, et al, Kilburn & Strode LLP, 20 Red Lion Street, London WC1R 4PJ, GB

(51) (8) **EP 2236519**
C 07K 16/24
C 12N 15/13
A 61K 39/395
(30) US 18.09.2007. 994343 P
US 08.08.2008. 87551 P
(96) EP 10166472.0 18.09.2008. En
(97) EP 2236519 06.10.2010. 201040 En
(54) Human GM-CSF antigen binding proteins
(71) Amgen, Inc, One Amgen Center Drive, Thousand Oaks, CA 91320-1799, US
(72) Kirchner, Jacqueline, 10366-44th Avenue NE, Seattle, WA 98125, US;
Brasel, Kenneth, 3035 NW 57th Street, Seattle, WA 98107, US;
Olson, Kara, 90 Bryant Avenue, Apt. 4EE, White Plains, NY 10605, US;
Escobar, Jose Carlos, 1707 East Beaver Lake Drive SE, Sammamish, WA 98075, US;
Barone, Dauphine, 14817 13th Drive SE, Mill Creek, WA 98012, US
(74) Care, Alison, et al, Kilburn & Strode LLP, 20 Red Lion Street, London WC1R 4PJ, GB

(51) (8) **EP 2294087 ***
C 07K 16/26
A 61K 39/395
A 61K 38/18
A 61P 7/06
A 61P 3/12
(30) US 01.05.2008. 49687 P
(86) PCT/US2009002606 28.04.2009.
(96) EP 09746911.8 28.04.2009. En
(87) WO2009139822 19.11.2009. 200947
(97) EP 2294087 16.03.2011. 201111 En
(54) ANTI-HEPCIDIN ANTIBODIES AND METHODS OF USE
(71) Amgen, Inc., One Amgen Center Drive, Thousand Oaks, CA 91320-1799, US
(72) FOLTZ, Ian, 2108 Knightswood Place, Burnaby, British Columbia V5A 4B9, CA;
GALLO, Michael, 2650 Colwood Drive, North Vancouver, British Columbia V7R 2R1, CA;
COOKE, Keegan, 85 Parkhill Circle, Ventura, CA 93003, US
(74) Grünecker, Kinkeldey, Stockmair & Schwanhäusser, Anwaltssozietät, Leopoldstrasse 4, 80802 München, DE

(51) (8) **EP 2057194 ***
C 07K 16/28
C 07K 14/715
(30) US 28.02.2007. 892104 P
US 20.06.2007. 945183 P
(86) PCT/US2008002534 26.02.2008.
(96) EP 08714212.1 26.02.2008. En
(87) WO2008106134 04.09.2008. 200836
(97) EP 2057194 13.05.2009. 200920 En
(54) ENGINEERED ANTI-IL-23R ANTIBODIES
(71) Schering Corporation, 2000 Galloping Hill Road, Kenilworth, NJ 07033, US
(72) PRESTA, Leonard G., 1900 Gough Street, Apt. 206, San Francisco, California 94109, US
(74) Miller, David James, et al, Mathys & Squire LLP, 120 Holborn, London EC1N 2SQ, GB

(51) (8) **EP 2081962 ***
C 07K 16/28
C 12N 15/13
C 12N 5/12
A 61K 39/395
A 61P 35/00
(30) US 19.10.2006. 852861 P
(86) PCT/US2007081799 18.10.2007.
(96) EP 07874222.8 18.10.2007. En
(87) WO2008136848 13.11.2008. 200846
(97) EP 2081962 29.07.2009. 200931 En
(54) NOVEL ANTI-NOTCH3 ANTIBODIES AND THEIR USE IN THE DETECTION AND DIAGNOSIS OF DISEASE
(71) Genentech, Inc., 1 DNA Way, South San Francisco, CA 94080, US
(72) LI, Kang, Genentech, Inc., 1 DNA Way, South San Francisco, California 94080, US;
FUNG, Sek, Chung, Genentech, Inc., 1 DNA Way, South San Francisco, California 94080, US;
YAO, Zhengbin, Genentech, Inc., 1 DNA Way, South San Francisco, California 94080, US

(74) Woolley, Lindsey Claire, et al, Mewburn Ellis LLP, 33 Gutter Lane, London, EC2V 8AS, GB

(51) (8) **EP 2137217 ***
C 07K 16/28
(30) US 05.04.2007. 910362 P
US 15.10.2007. 980026 P
(86) PCT/US2008059374 04.04.2008.
(96) EP 08733125.2 04.04.2008. En
(87) WO2008124570 16.10.2008. 200842
(97) EP 2137217 30.12.2009. 200953 En
(54) METHODS FOR INHIBITING THE BINDING OF ENDOSIALIN TO LIGANDS
(71) Morphotek, Inc., 210 Welsh Pool Road, Exton, PA 19341, US
(72) ZHOU, Yuhong, 285 Shelbourne Lane, Phoenixville, PA 19460, US;
TOMKOWICZ, Brian, E., 3323 Gurley Road, Philadelphia, PA 19154, US;
GRASSO, Luigi, 403 Barbara Lane, Bryn Mawr, PA 19010, US;
SASS, Philip, M., 1903 Black Hawk Circle, Audubon, PA 19403, US;
NICOLAIDES, Nicholas, C., 4 Cider Mill Court, Garnett Valley, PA 19061, US
(74) Eddowes, Simon, et al, W.P. Thompson & Co., 55 Drury Lane, London, WC2B 5SQ, GB

(51) (8) **EP 2297204 ***
C 07K 16/28
A 61K 39/395
A 61P 37/06
(30) US 06.06.2008. 59647 P
(86) PCT/US2009046464 05.06.2009.
(96) EP 09759540.9 05.06.2009. En
(87) WO2009149382 10.12.2009. 200950
(97) EP 2297204 23.03.2011. 201112 En
(54) ANTI-CD8 ANTIBODIES BLOCK PRIMING OF CYTOTOXIC EFFECTORS AND LEAD TO GENERATION OF REGULATORY CD8+T CELLS
(71) Baylor Research Institute, Suite 125, 3434 Live Oak Street, Dallas, TX 75204, US
(72) BANCHEREAU, Jacques, F., 6730 Northaven Road, Dallas, TX 75230, US;
KLECHEVSKY, Eynav, 27 Hanna Street, 34817 Haifa, IL;
PALUCKA, Anna, Karolina, 3000 Blackburn St. 2522, Dallas, TX 75204, US
(74) Sonn & Partner Patentanwälte, Riemergasse 14, 1010 Wien, AT

(51) (8) **EP 2297206 ***
C 07K 16/28
A 61K 39/395
A 61P 35/00
(30) US 14.05.2008. 53192 P
(86) PCT/US2009043063 07.05.2009.
(96) EP 09747210.4 07.05.2009. En
(87) WO2009140124 19.11.2009. 200947
(97) EP 2297206 23.03.2011. 201112 En
(54) ANTI-CXCR4 ANTIBODIES
(71) ELI LILLY AND COMPANY, Lilly Corporate Center, Indianapolis, IN 46285, US
(72) DICKERSON, Cindy, Takeuchi, Eli Lilly And Company, Lilly Corporate Center, Indianapolis, IN 46285, US;
MARQUIS, David, Matthew, 2106 Meadowgreen Court, Encitas, CA 92024, US;
OBUNGU, Victor, Eli Lilly And Company, Lilly Corporate Center, Indianapolis, IN 46285, US;
PENG, Sheng-Bin, Eli Lilly And Company, Lilly Corporate Center, Indianapolis, IN 46285, US;
VAILLANCOURT, Peter, Edward, Eli Lilly And Company, Lilly Corporate Center, Indianapolis, IN 46285, US
(74) Commander, Paul Martin Brial, et al, Eli Lilly and Company Limited, Lilly Research Centre, Erl Wood Manor, Sunninghill Road, Windlesham, Surrey GU20 6PH, GB

(51) (8) **EP 2300500 ***
C 07K 16/28
C 12N 15/13
C 12N 5/10
C 12N 15/63
(30) US 30.05.2008. 130394 P
US 30.05.2008. 130395 P
US 30.05.2008. 130539 P
(86) PCT/US2009045365 28.05.2009.
(96) EP 09767327.1 28.05.2009. En
(87) WO2009155015 23.12.2009. 200952
(97) EP 2300500 30.03.2011. 201113 En
(54) ANTI-FLT3 ANTIBODIES
(71) Imclone LLC, 180 Varick Street, New York, NY 10014, US
(72) LI, Yiwen, Imclone LLC, 180 Varick Street, New York, NY 10044, US;
LU, Dan, Imclone LLC, 180 Varick Street, New York, NY 10044, US;
SURGULADZE, David, Imclone LLC, 180 Varick Street, New York, NY 10044, US;
TONRA, James, R., Imclone LLC, 180 Varick Street, New York, NY 10044, US
(74) Commander, Paul Martin Brial, Eli Lilly and Company Limited, Lilly Research Centre, Erl Wood Manor, Sunninghill Road, Windlesham, Surrey GU20 6PH, GB

(51) (8) **EP 2307459 ***
C 07K 16/28
A 61K 39/395
(30) US 07.11.2008. 112699 P
US 07.11.2008. 112701 P
US 08.07.2008. 79095 P
(86) PCT/US2009003995 08.07.2009.
(96) EP 09794822.8 08.07.2009. En
(87) WO2010005567 14.01.2010. 201002
(97) EP 2307459 13.04.2011. 201115 En
(54) NOTCH1 RECEPTOR BINDING AGENTS AND METHODS OF USE THEREOF
(71) OncoMed Pharmaceuticals, Inc., 800 Chesapeake Drive, Redwood City, CA 94063, US
(72) GURNEY, Austin, L., 946 Diamond Street, San Francisco, CA 94114, US;
HOEY, Timothy, Charles, 200 Darrell Road, Hillsbouough, CA 94010, US;
BRUHNS, Maureen, Fitch, 632 42nd Avenue, San Mateo, CA 94403, US;
AXELROD, Fumiko, Takada, 3780 Wright Place, Palo Alto, CA 94306, US

(74) Evenson, Jane Harriet, et al, Mathys & Squire LLP, 120 Holborn, London EC1N 2SQ, GB

(51) (8) **EP 2315779 ***
C 07K 16/28
A 61K 39/395
(30) US 09.07.2008. 79355 P
(86) PCT/US2009003999 09.07.2009.
(96) EP 09788882.0 09.07.2009. En
(87) WO2010005570 14.01.2010. 201002
(97) EP 2315779 04.05.2011. 201118 En
(54) COMPOSITIONS COMPRISING ANTIBODIES TO LINGO OR FRAGMENTS THEREOF
(71) Biogen Idec MA Inc., 14 Cambridge Center, Cambridge, Massachusetts 02142, US
(72) MI, Sha, 4 Vernon Road, Belmont, MA 02478, US;
PEPINSKY, R., Blake, 30 Falmouth Road, Arlington, MA 02474, US;
GRAFF, Christilyn, 632 Massachusetts Avenue nr. 614, Cambridge, Massachusetts 02139, US
(74) Adams, Harvey Vaughan John, Mathys & Squire LLP, 120 Holborn, London, EC1N 2SQ, GB

(51) (8) **EP 2318437 ***
C 07K 16/28
A 61K 39/395
A 61P 25/28
A 61P 37/00
(30) US 28.08.2008. 190362 P
(86) PCT/US2009055294 28.08.2009.
(96) EP 09792032.6 28.08.2009. En
(87) WO2010025321 04.03.2010. 201009
(97) EP 2318437 11.05.2011. 201119 En
(54) METHOD FOR TREATING MULTIPLE SCLEROSIS PATIENTS WITH ANTI-IL2R ANTIBODIES
(71) Abbott Biotherapeutics Corp., 1500 Seaport Boulevard, Redwood City CA 94063, US
(72) ROBINSON, Randy, R., 49 Showers Drive B454, Mountain View, CA 94040, US
(74) Broughton, Jon Philip, et al, HLBBshaw, Merlin House, Falconry Court, Baker's Lane, Epping, Essex CM16 5DQ, GB

(51) (8) **EP 2318442 ***
C 07K 16/28
A 61K 39/395
A 61P 25/00
(30) US 19.06.2009. 218627 P
US 08.08.2008. 87294 P
US 16.04.2009. 169801 P
(86) PCT/US2009053136 07.08.2009.
(96) EP 09791287.7 07.08.2009. En
(87) WO2010017468 11.02.2010. 201006
(97) EP 2318442 11.05.2011. 201119 En
(54) TREATMENT OF AUTOIMMUNE AND INFLAMMATORY DISEASE
(71) Glaxo Group Limited, Glaxo Wellcome House, Berkeley Avenue, Greenford, Middlesex UB6 0NN, GB
(72) LEUNG, Stewart, 898 Halei Road No. 3, Bldg-3, Hi-Tech Park, Shanghai 201203, CN;
LI, Lixin, 898 Halei Road No. 3, Bldg.3, Hi-Tech Park, Shanghai 201203, CN;
LIU, Xuebin, 898 Halei Road No. 3, Bld. 3, Hi-Tech Park, Shanghai 201203, CN;
LU, Hongtao, 898 Halei Road No. 3, Bldg. 3, Hi-Tech Park, Shanghai 201203, CN;
TSUI, Ping, 898 Halei Road No. 3, Bldg. 3, Hi-Tech Park, Shanghai 201203, CN;
ZANG, Jingwu, 898 Halei Road No. 3, Bldg. 3, Hi-Tech Park, Shanghai 201203, CN
(74) Sayce, Alastair George, GlaxoSmithKline, Corporate Intellectual Property (CN925.1), 980 Great West Road, Brentford, Middlesex TW8 9GS, GB

(51) (8) **EP 2321352 ***
C 07K 16/28
(30) US 18.07.2008. 82078 P
US 20.03.2009. 162121 P
(86) PCT/US2009050985 17.07.2009.
(96) EP 09790582.2 17.07.2009. En
(87) WO2010009391 21.01.2010. 201003
(97) EP 2321352 18.05.2011. 201120 En
(54) COMPOSITIONS MONOVALENT FOR CD28 BINDING AND METHODS OF USE
(71) Bristol-Myers Squibb Company, P.O. Box 4000, Princeton, NJ 08543, US;
Domantis Limited, 980 Great West Road, Brentford, Middlesex TW8 9GS, GB
(72) MCKINNON, Murray, 17 Canal Run West, Washington Crossing, PA 18977, US;
NADLER, Steven, G., 164 Neil Court, Princeton, NJ 08540, US;
SUCHARD, Suzanne, J., 621 Foulkston Road, Wilmington, DE 19803, US;
CLASSON, Brendan, C/o Bristol-myers Squibb Company, P.O. Box 4000, Princeton, NJ 08543, US;
HOLMES, Steve, C/o Domantis Limited, 315 Cambridge Science Park, Cambridge, Cambridgeshire CB4 0WG, GB;
IGNATOVICH, Olga, C/o Domantis Limited, 315 Cambridge Science Park, Cambridge, Cambridgeshire CB4 0WG, GB;
PLUMMER, Christopher, C/o Domantis Limited, 315 Cambridge Science Park, Cambridge, Cambridgeshire CB4 0WG, GB;
GRANT, Steve, C/o Domantis Limited, 315 Cambridge Science Park, Cambridge, Cambridgeshire CB4 0WG, GB
(74) Beacham, Annabel Rose, Dehns, St Bride's House, 10 Salisbury Square, London, EC4Y 8JD, GB

(51) (8) **EP 2132230 ***
C 07K 16/42
A 61P 37/06
(30) US 22.03.2007. 896339 P
(86) PCT/US2008057819 21.03.2008.
(96) EP 08744179.6 21.03.2008. En
(87) WO2008116149 25.09.2008. 200839
(97) EP 2132230 16.12.2009. 200951 En
(54) APOPTOTIC ANTI-IGE ANTIBODIES BINDING THE MEMBRANE-BOUND IGE
(71) Genentech, Inc., 1 DNA Way, South San Francisco, CA 94080, US
(72) WU, Lawren, 1051 Pensacola Street, Foster City, California 94404, US;
BALAZS, Mercedesz, 2735 Driftwood Street, Hayward, California 94545, US;

BRIGHTBILL, Hans, 240 Dolores Street, 124, San Francisco, California 94103, US;
CHAN, Andrew, 1201 Cloud Avenue, Menlo Park, California 94025, US;
CHEN, YVONne, 222 8th Avenue, 320, San Mateo, California 94401, US;
CHUNTHARAPAI, Anan, 826 Ellis Drive, Colma, California 94015, US;
DENNIS, Mark, 120 Plymouth Avenue, San Carlos, California 94070, US;
WONG, Terence, 312 Shell Gate Road, Alameda, California 94501, US
(74) Kiddle, Simon John, et al, Mewburn Ellis LLP, 33 Gutter Lane, London, EC2V 8AS, GB

(51) (8) **EP 2297208 ***
C 07K 16/46
C 07K 16/20
C 12P 21/08
(30) US 03.06.2008. 130776 P
US 24.06.2008. 132951 P
(86) PCT/US2009046130 03.06.2009.
(96) EP 09759344.6 03.06.2009. En
(87) WO2009149185 10.12.2009. 200950
(97) EP 2297208 23.03.2011. 201112 En
(54) DUAL VARIABLE DOMAIN IMMUNOGLOBULINS AND USES THEREOF
(71) Abbott Laboratories, 100 Abbott Park Road, Abbott Park, Illinois 60064, US
(72) GHAYUR, Tariq, 1014 Washington Street, Holliston, MA 01746, US;
HAHN, Alfred, Schwarzwaldstrasse 38, 68163 Mannheim, DE;
MUELLER, Bernhard, Altbachstrasse 10, 67435 Neustadt-Gimmeldingen, DE
(74) Modiano, Micaela Nadia, et al, Modiano & Partners, Thierschstrasse 11, 80538 München, DE

(51) (8) **EP 2297209 ***
C 07K 16/46
C 07K 16/20
C 12P 21/08
(30) US 03.06.2008. 130817 P
US 23.10.2008. 197172 P
(86) PCT/US2009046137 03.06.2009.
(96) EP 09759348.7 03.06.2009. En
(87) WO2009149189 10.12.2009. 200950
(97) EP 2297209 23.03.2011. 201112 En
(54) DUAL VARIABLE DOMAIN IMMUNOGLOBULINS AND USES THEREOF
(71) Abbott Laboratories, 100 Abbott Park Road, Abbott Park, Illinois 60064, US
(72) GHAYUR, Tariq, 1014 Washington Street, Holliston, MA 01746, US;
ISAKSON, Peter, C., 14 Hillside Avenue, Southborough, MA 01772, US;
OLSON, Lisa, M., 4 Circle Drive, Hopkinton, MA 01748, US;
WU, Chengbin, 386 Prospect Street, Shrewsbury, MA 01545, US;
HUGUNIN, Margaret, 7 Indian Path, North Grafton, MA 01536, US;
KAMATH, Rajesh, V., 27 Redland Street, Shrewsbury, MA 01545, US;
CUFF, Carolyn, A., 23 Elliot Trail, Grafton, MA 01519, US;
ALLEN, Hamish, J., 14 Twin Spring Drive, Boylston, MA 01505, US
(74) Modiano, Micaela Nadia, et al, Modiano & Partners, Thierschstrasse 11, 80538 München, DE

(51) (8) **EP 2310418 ***
C 08B 1/00
C 07H 1/00
B 01J 19/00
(30) US 16.07.2008. 81348 P
US 28.08.2008. 92680 P
US 10.07.2009. 224809 P
US 16.07.2008. 81341 P
US 16.07.2008. 81337 P
US 16.07.2008. 81346 P
(86) PCT/US2009050898 16.07.2009.
(96) EP 09790548.3 16.07.2009. En
(87) WO2010009343 21.01.2010. 201003
(97) EP 2310418 20.04.2011. 201116 En
(54) METHOD OF EXTRACTION OF FURFURAL AND GLUCOSE FROM BIOMASS USING ONE OR MORE SUPERCRITICAL FLUIDS
(71) Sriya Innovations, Inc., 1831 W. Oak Parkway, Suite B, Marietta, GA 30062-2246, US
(72) KILAMBI, Srinivas, 2240 Snug Harbor, Marietta, GA 30066, US
(74) Phillips & Leigh, 5 Pemberton Row, London EC4A 3BA, GB

(51) (8) **EP 2078047 ***
C 08G 18/00
C 08J 7/04
C 09D 175/04
C 08G 18/40
B 32B 27/08
B 32B 27/30
B 32B 27/40
C 09J 175/04
(30) US 01.11.2006. 855747 P
(86) PCT/US2007023068 31.10.2007.
(96) EP 07853053.2 31.10.2007. En
(87) WO2008057381 15.05.2008. 200820
(97) EP 2078047 15.07.2009. 200929 En
(54) POLYURETHANE ADHESIVE
(71) Lucite International, Inc., 7275 Goodlett Farms Parkway, Cordova, TN 38016, US
(72) JANOWICZ, Andrew, 8 Wynyard Court, Thorpe Thewles, Stockton-on-tees TS21 3LN, GB;
FAROOQ, Fareeduddin, 2608 Kirby Road, Memphis, TN 38119, US
(74) Ritter, Thomas Kurt, Jones Day, Prinzregentenstraße 11, 80538 München, DE

(51) (8) **EP 2311900**
C 08G 81/00
C 08F 4/00
C 08F 8/00
C 08F 289/00
C 08G 64/00
(30) JP 07.09.2005. 2005259300
JP 28.12.2005. 2005379857
(96) EP 10014901.2 07.09.2006. En

(97) EP 2311900 20.04.2011. 201116 En
(54) Star polymer and method for producing the same
(71) Nippon Soda Co., Ltd., 2-1 Ohtemachi 2-chome,Chiyoda-ku, Tokyo, 100-8165, JP
(72) Niitani, Takeshi, c/o Nippon Soda Co., Ltd., R & D laboaratory for high-Performance Materials, 12-54, Goiminamikaigan, Ichihara-shi, Chiba 2900045, JP
(74) Wibbelmann, Jobst, Wuesthoff & Wuesthoff, Patent- und Rechtsanwälte, Schweigerstrasse 2, 81541 München, DE

(51) (8) **EP 1930366**
C 08J 9/00
C 08J 9/232
C 08K 5/00
C 08K 5/103
C 08K 5/12
C 08L 27/06
(30) US 06.12.2006. 567441
(96) EP 07023134.5 29.11.2007. En
(97) EP 1930366 11.06.2008. 200824 En
(54) Low-color foam compositions
(71) Eastman Specialties Holdings Corporation, 2711 Centerville Road, Suite 400, Wilmington, DE 19808, New Castle County, US
(72) Arendt, William D., 417 Catalpa Lane, Libertyville, Illinois 60042, US;
Joshi, Makarand V., 762 Fieldale Lane, Grayslake, Illinois 60030, US
(74) Ricker, Mathias, et al, Wallinger Ricker Schlotter Foerstl, Patent- und Rechtsanwälte, Zweibrückenstrasse 5-7, 80331 München, DE

(51) (8) **EP 2216363**
C 08K 5/21
C 08K 5/053
C 08L 61/28
C 08L 61/24
C 08K 5/3412
C 08J 5/24
C 08G 12/38
C 08G 12/42
(30) EP 06.02.2009. 09152246
(96) EP 10152209.2 01.02.2010. De
(97) EP 2216363 11.08.2010. 201032 De
(54) Aqueous, modified melamine resin mixture, method for producing same and use of same to saturate absorbent carriers and compound material produced using the melamine resin material
(71) BASF SE, 67056 Ludwigshafen, DE
(72) Lunkwitz, Ralph, Bergsteinstr.2, 67434, Neustadt, DE;
Reif, Martin, Salierstraße 26, 67354, Römerberg, DE;
Pandl, Klaus, Schauinslandstr. 6, 76707, Hambrücken, DE;
Negele, Anton, Platanenweg 2, 67146, Deidesheim, DE

(51) (8) **EP 2291453 ***
C 08L 61/00
C 08L 97/02
C 08L 91/00
B 24D 3/28
C 08L 61/06
C 08L 101/06
(30) FR 06.05.2008. 0852992
(86) PCT/FR2009050841 06.05.2009.
(96) EP 09750049.0 06.05.2009. Fr
(87) WO2009141568 26.11.2009. 200948
(97) EP 2291453 09.03.2011. 201110 Fr
(54) FORMALDEHYDE-FREE ABRASIVE ARTICLE
(71) Saint-Gobain Abrasives, Inc., 1 New Bond Street, Worcester, MA 01615, US;
Saint-Gobain Abrasifs Technologie et Services S.A., Rue de l'Ambassadeur, 78700 Conflans-Sainte-Honorine, FR
(72) ARNAUD, Alix, 57 Avenue de la République, F-92120 Montrouge, FR
(74) Jamet, Vincent, et al, Saint-Gobain Recherche, Département Propriété Industrielle, 39 Quai Lucien Lefranc, 93300 Aubervilliers, FR

(51) (8) **EP 2294133 ***
C 08L 67/02
(30) US 02.07.2008. 167243
(86) PCT/US2009048525 24.06.2009.
(96) EP 09774122.7 24.06.2009. En
(87) WO2010002671 07.01.2010. 201001
(97) EP 2294133 16.03.2011. 201111 En
(54) FAST CURING VULCANIZABLE MULTI-PART ELASTOMER COMPOSITION, AND PROCESS FOR BLENDING, INJECTION MOLDING AND CURING OF ELASTOMER COMPOSITION
(71) Zeon Chemicals L.P., P.O. Box 37620, Louisville, KY 40233-7620, US
(72) MANLEY, Paul, E., 11805 Olde Spring Road, Louisville, KY 40245, US;
SMITH, Charles, T., 2306 E. Mt Sterling Road, English, IN 47118, US
(74) Portal, Frédéric, et al, Cabinet Beau de Loménie, 158, rue de l'Université, 75340 Paris Cedex 07, FR

(51) (8) **EP 2310460 ***
C 08L 95/00
C 10C 3/00
(30) US 05.08.2008. 86331 P
(86) PCT/US2009052830 05.08.2009.
(96) EP 09791181.2 05.08.2009. En
(87) WO2010017283 11.02.2010. 201006
(97) EP 2310460 20.04.2011. 201116 En
(54) PROCESS FOR COLD-IN-PLACE RECYCLING USING FOAMED ASPHALT AND LUBRICATION ADDITIVE
(71) A.L.M. Holding Company, 920 10th Avenue North, Onalaska, WI 54650, US
(72) REINKE, Gerald, H., W5373 Boma Road, La Crosse, WI 54601, US;
LANGE, David, W4735 Cherrywood Drive, La Crosse, WI 54601, US;
BAUMGARDNER, Gaylon, L., 1644 Plantation Blvd., Jackson, MS 39211, US;
DUKATZ, Ervin, W5531 Southdale Drive, La Crosse, WI 54601, US
(74) Vossius & Partner, Siebertstrasse 4, 81675 München, DE

(51) (8) **EP 2322581**
C 09C 1/02
C 01F 5/24
(96) EP 09174954.9 03.11.2009. En
(97) EP 2322581 18.05.2011. 201120 En
(54) Precipitated magnesium carbonate

(71) Omya Development AG, Baslerstrasse 42, 4665 Oftringen, CH
(72) Pohl, Michael, H.-v.-Tuerlin Strasse 11, 9500, Villach, AT; Rainer, Christian, Treffnerstrasse 62f, 9500, Villach, AT; Esser, Markus, Friedrich-Ebert-Platz 6, 50169, Kerpen, DE
(74) Glas, Holger, Maiwald Patentanwalts GmbH, Elisenhof, Elisenstrasse 3, 80335 München, DE

(51) (8) **EP 2112205**
C 09D 7/02
C 09D 7/12
C 09D 175/04
C 08G 18/28
C 08G 18/32
C 08G 18/48
C 08G 18/71
C 08G 18/76
(30) DE 23.04.2008. 202008005669 U
DE 06.06.2008. 202008007626 U
DE 25.06.2008. 102008029858
(96) EP 09005053.5 06.04.2009. De
(97) EP 2112205 28.10.2009. 200944 De
(54) Stable dispersion of anorganic nanoparticles
(71) BYK-Chemie GmbH, Abelstrasse 45, 46483 Wesel, DE
(72) Reimann, Jörg, Breiter Weg 45, 46483 Wesel, DE; Nagel, Carsten, Die Nielen 63, 48249 Dülmen, DE; Tecklenburg, Janin, Rothebuschstrasse 132, 46119 Oberhausen, DE
(74) Gesthuysen, von Rohr & Eggert, Patentanwälte, Huyssenallee 100, 45128 Essen, DE

(51) (8) **EP 2199355**
C 09J 7/02
C 09J 7/00
B 65H 37/00
(30) US 14.05.2004. 846269
(96) EP 10000161.9 13.05.2005. En
(97) EP 2199355 23.06.2010. 201025 En
(54) Adhesive dispensing tape including a transparent carrier material
(71) Glue Dots International, LLC, 5515 South Westridge Drive, New Berlin, WI 53151, US
(72) Downs, John P., W258 N9488 Riverview Drive, Colgate, Wisconsin 53071, US;
Daun, Robin R., 2426B Fox River Parkway, Waukesha, Wisconsin 53189, US
(74) Barrett, Jennifer Catherine, et al, Kilburn & Strode LLP, 20 Red Lion Street, London WC1R 4PJ, GB

(51) (8) **EP 2322585**
C 09J 201/00
C 09J 7/00
H 01B 1/22
H 01L 21/60
H 05K 1/14
(30) JP 26.12.2005. 2005373042
JP 04.08.2006. 2006213230
(96) EP 11154315.3 14.12.2006. En
(97) EP 2322585 18.05.2011. 201120 En
(54) Adhesive composition, circuit connecting material and connecting structure of circuit member
(71) Hitachi Chemical Co., Ltd., 1-1, Nishishinjuku 2-chome, Shinjuku-ku, Tokyo 163-0449, JP
(72) Tatsuzawa, Takashi, Hitachi Chemical Company, Ltd. Goshomiya Works 115, Ibaraki 308-8524, JP;
Kobayashi, Kouji, Hitachi Chemical Company, Ltd. Goshomiya Works 115, Ibaraki 308-8524, JP;
Fujinawa, Tohru, Hitachi Chemical Company, Ltd. Goshomiya Works 115, Ibaraki 308-8524, JP;
Fukushima, Naoki, Hitachi Chemical Company, Ltd. Goshomiya Works 115, Ibaraki 308-8524, JP
(74) von Kreisler, Alek, Von Kreisler Selting Werner, Deichmannhaus am Dom, Bahnhofsvorplatz 1, 50667 Köln, DE

(51) (8) **EP 2294159 ***
C 09K 11/06
G 01N 21/64
(30) DE 26.06.2008. 102008029936
DE 18.07.2008. 102008033871
(86) PCT/EP2009003067 28.04.2009.
(96) EP 09768868.3 28.04.2009. De
(87) WO2009156019 30.12.2009. 200953
(97) EP 2294159 16.03.2011. 201111 De
(54) DISTANCE-CONTROLLED ENERGY TRANSFER DYE COMPLEXES
(71) Inbio Prof. Jürgen Büddefeld Dr. Peter Klauth, Prof. Manfred Rietz Gbr, Ringstrasse 3, 47239 Duisburg, DE
(72) KLAUTH, Peter, Alter Sportplatz 17, 41189 Mönchengladbach, DE;
RIETZ, Manfred, Anton-Aretz-Strasse 1, 41812 Erkelenz, DE
(74) Gesthuysen, von Rohr & Eggert, Patentanwälte, Postfach 10 13 54, 45013 Essen, DE

(51) (8) **EP 2305778**
C 10G 3/00
C 10L 1/02
(30) HU 30.09.2009. 0900623
HU 27.11.2009. 0900739
(96) EP 10179216.6 24.09.2010. Hu
(97) EP 2305778 06.04.2011. 201114 En
(54) Fuel and fuel additives capable for use for internal combustion engines and process for the production thereof
(71) MOL Magyar Olaj- és Gázipari Nyrt., Október huszonharmadika utca 18., 1117 Budapest, HU;
OLAJTERV Féválllakozóés Tervezö Zrt., Lajos utca 103., 1036 Budapest, HU;
Pannon Egyetem, Egyetem utca. 10, 8200 Veszprém, HU;
Magyar Tudományos Akadémia Kémiai Kutatóközpont, Pusztaszeri út 59-67, 1025 Budapest, HU
(72) Thernesz, Artur, MOL Nyrt., Egres utca 27., 2000, Szentendre, HU;
Boda, László, MOL Nyrt., Körtefa utca 13/3., 2440, Százhalombatta, HU;
Petró, József, MOL Nyrt., Rákóczi utca 40., 2440, Százhalombatta, HU;
Leveles, László, MOL Nyrt., Ponty utca 6., 2440, Százhalombatta, HU;
Wáhlné Horváth, Ilona, MOL Nyrt., Kodály Zoltán sétány 12. 1/5., 2440, Százhalombatta, HU;
Szalmásné Pécsvári, Gabriella, MOL Nyrt., Sas utca 10., 2440, Százhalombatta, HU;
Kelemen, Béla, MOL Nyrt., Zentai utca 25., 1222, Budapest, HU;
Vuk, Tibor, MOL Nyrt., Gagarin utca 7., 2837, Vértesszölös, HU;

Rácz, László, MOL Nyrt., Újvilág utca 15., 1145, Budapest, HU;
Holló, András, MOL Nyrt., Meggyfa utca 4., 2440, Százhalombatta, HU;
Szerencsés, Zoltán, MOL Nyrt., Honfoglalás utca 13., 2045, Törökbálint, HU;
Kovács, Ferenc, MOL Nyrt., Budai Nagy Antal út 5/D, 2500, Esztergom, HU;
Kovács, Imre, MOL Nyrt., Széchenyi utca 48., 2462, Martonvásár, HU;
Tolvajné Németh, Krisztina, MOL Nyrt., Mátyás király utca 46., 2030, Érd, HU;
Arányi, László, OLAJTERV Zrt., Gömb utca 4/B 5/5, 1139, Budapest, HU;
Stéger, Csaba, OLAJTERV Zrt., Egressy út 31-33. D212, 1149, Budapest, HU;
Valyon, József, MTA Kémiai Kutatóközpont, Lepke utca 8. fsz. 2., 1026, Budapest, HU;
Onestyák, György, MTA Kémiai Kutatóközpont, Szabadság utca 11., 1165, Budapest, HU;
Hanscók, Jenõ, Pannon Egyetem, Zrínyi Miklós út 5/6, 8200, Veszprém, HU;
Krár, Márton, Pannon Egyetem, Futó utca 4. II/9, 8400, Ajka, HU;
Nagy, Gábor, Pannon Egyetem, Moroló utca 29., 7694, Hosszúhetény, HU;
Varga, Zoltán, Pannon Egyetem, Március 15. utca 3/C, 8200, Veszprém, HU
(74) Schläfer, Laszlo, DANUBIA Patent and Law Office LLC, POB 198, POB 198, 1368 Budapest, HU

---

(51) (8) **EP 2300568 ***
C 10J 3/36
C 10J 3/14
C 10J 3/16
C 10B 49/06
C 10J 3/56
C 10J 3/54
(30) SE 29.05.2008. 0801266
(86) PCT/SE2009050630 29.05.2009.
(96) EP 09755162.6 29.05.2009. En
(87) WO2009145724 03.12.2009. 200949
(97) EP 2300568 30.03.2011. 201113 En
(54) A TWO-STAGE HIGH-TEMPERATURE PREHEATED STEAM GASIFIER
(71) Boson Energy Sa, Boulevard Prince Felix 29, 1513 Luxembourg, SE
(72) BLASIAK, Wlodzimierz, Reginavägen 10, S-131 50 Saltsjö-Duvnäs, SE;
YANG, Weihong, Adolf Lemons väg 107, S-187 76 Täby, SE
(74) Allee, Harriet Eva Charlotta, BRANN AB, P.O. Box 12246, 102 26 Stockholm, SE

---

(51) (8) **EP 2321390 ***
C 10L 5/40
(30) US 12.08.2008. 88253 P
US 12.08.2008. 88178 P
(86) PCT/US2009053547 12.08.2009.
(96) EP 09807217.6 12.08.2009. En
(87) WO2010019662 18.02.2010. 201007
(97) EP 2321390 18.05.2011. 201120 En
(54) MODULARIZED SYSTEM AND METHOD FOR UREA PRODUCTION USING A BIO-MASS FEEDSTOCK
(71) 4a Technologies, Llc, 3423 94th Street, Lubbock, TX 79423, US
(72) COLLINS, Terry, R., 9707 West 32nd Street, Stillwater, OK 74074, US;
SIMONTON, James, L., 5420 100th Street, Lubbock, TX 79424, US;
BERUVIDES, Mario, G., 3423 94th Street, Lubbock, TX 79423, US;
LOZADA, Jessie, 6931 Highway 84, Shallowater, TX 79363, US
(74) Bucks, Teresa Anne, Boult Wade Tennant, Verulam Gardens, 70 Gray's Inn Road, London WC1X 8BT, GB

---

(51) (8) **EP 2213718**
C 11D 17/00
E 03D 9/02
(30) DE 17.11.2008. 102008057739
(96) EP 09013738.1 02.11.2009. De
(97) EP 2213718 04.08.2010. 201031 De
(54) Coated shaped solid cleaning composition
(71) Buck-Chemie GmbH, Hertzstrasse 1, 71083 Herrenberg, DE
(72) Leipold, Joachim, Memelstrasse 37, 72760 Reutlingen, DE;
Fritz, Matthias, Hegelweg 5, 72810 Gomaringen, DE;
Edgar, Jaeschke, Ludwig-Richter-Weg 14, 70794 Filderstadt, DE
(74) Mammel, Ulrike, et al, Mammel & Maser, Patentanwälte, Tilsiter Strasse 3, 71065 Sindelfingen, DE

---

(51) (8) **EP 2315821 ***
C 12C 11/07
C 12H 1/06
(30) EP 30.06.2008. 08159365
(86) PCT/EP2009058098 29.06.2009.
(96) EP 09772388.6 29.06.2009. En
(87) WO2010000688 07.01.2010. 201001
(97) EP 2315821 04.05.2011. 201118 En
(54) AN IMPROVED METHOD OF BREWING BEER
(71) Anheuser-Busch InBev S.A., Grand-Place 1, 1000 Brussels, BE
(72) BOERESCU, Alina, Pinewood Drive 412, London, Ontario N6J3L2, CA;
ADAM, Pierre, Rue d'Enfer 78, B-1457 Walhain, BE
(74) BiiP cvba, Culliganlaan 1B, 1831 Diegem (Bruxelles), BE

---

(51) (8) **EP 2133413**
C 12H 1/07
C 12H 1/04
B 01D 35/02
B 01D 35/16
B 01D 35/04
(30) RU 09.03.2007. 2007108676
(86) PCT/RU2008000092 20.02.2008.
(96) EP 08741785.3 20.02.2008. Ru
(87) WO2008111873 18.09.2008. 200838
(97) EP 2133413 16.12.2009. 200951 En
(54) DEVICE FOR TREATING AND PURIFYING A LIQUID PRODUCT

(71) Obschestvo S Ogranichennoi Otvetstvennostiyu, "Eurostandart", Ul. Irkutskaya 11-1, Moscow 107-497, RU
(72) KISTEREV, Valeriy Evgenyevich, ul. 11-aya Parkovaya, 38-57, Moscow, 105264, RU;
ZHERDEV, Pavel Dmitrievich, ul. Tsentralnaya, 70a, Mytischi, Moskovskaya obl., 141021, RU
(74) Sonn & Partner Patentanwälte, Riemergasse 14, 1010 Wien, AT

(51) (8) **EP 2310485 ***
C 12M 1/34
(30) US 10.07.2008. 218096
(86) PCT/US2009003541 11.06.2009.
(96) EP 09794759.2 11.06.2009. En
(87) WO2010005466 14.01.2010. 201002
(97) EP 2310485 20.04.2011. 201116 En
(54) BIOSENSOR FEATURING CONFINEMENT OF DEPOSITED MATERIAL AND INTRA-WELL SELF-REFERENCING
(71) SRU Biosystems, Inc., 14-A Gill Road, Woburn, MA 01801, US
(72) SCHULZ, Stephen, C., 17 Sheep Road, Lee, NH 03824, US
(74) Fleuchaus, Michael A., et al, Fleuchaus & Gallo Partnerschaft, Patent- und Rechtsanwälte, Sollner Straße 36, 81479 München, DE

(51) (8) **EP 2294179 ***
C 12N 1/13
C 07K 16/14
C 12N 15/63
(30) US 27.06.2008. 76430 P
(86) PCT/US2009048929 26.06.2009.
(96) EP 09771189.9 26.06.2009. En
(87) WO2009158658 30.12.2009. 200953
(97) EP 2294179 16.03.2011. 201111 En
(54) INDUCTION OF FLOCCULATION IN PHOTOSYNTHETIC ORGANISMS
(71) Sapphire Energy, Inc., Attn: Legal Department, 3115 Merryfield Row, San Diego, California 92121, US
(72) MENDEZ, Michael, Attn: Legal Department, 3115 Merryfield Row, San Diego, California 92121, US;
BEHNKE, Craig, Attn: Legal Department, 3115 Merryfield Row, San Diego, California 92121, US;
POON, Yan, Attn: Legal Department, 3115 Merryfield Row, San Diego, California 92121, US;
LEE, Philip, Attn: Legal Department, 3115 Merryfield Row, San Diego, California 92121, US
(74) Leoni, Richard Pietro, et al, HLBBshaw, Merlin House, Falconry Court, Baker's Lane, Epping, Essex CM16 5DQ, GB

(51) (8) **EP 2300600 ***
C 12N 5/00
(30) US 13.06.2008. 61235 P
(86) PCT/US2009047185 12.06.2009.
(96) EP 09763705.2 12.06.2009. En
(87) WO2009152417 17.12.2009. 200951
(97) EP 2300600 30.03.2011. 201113 En
(54) METHODS FOR IMPROVING VIABILITY AND PRODUCTIVITY IN CELL CULTURE
(71) Centocor Ortho Biotech Inc., 800/850 Ridgeview Drive, Horsham, PA 19044, US
(72) DORAI, Haimanti, 145 King Of Prussia Road, Radnor, PA 19087, US;
LY, Celia, 145 King Of Prussia Road, Radnor, PA 19087, US;
SAUERWALD MCLAIN, Tina, M., 145 King Of Prussia Road, Radnor, PA 19087, US
(74) Goodfellow, Hugh Robin, Carpmaels & Ransford, One Southampton Row, London, WC1B 5HA, GB

(51) (8) **EP 2310491 ***
C 12N 5/00
(30) EP 20.06.2008. 08158652
(86) PCT/NL2009050368 22.06.2009.
(96) EP 09766884.2 22.06.2009. En
(87) WO2009154466 23.12.2009. 200952
(97) EP 2310491 20.04.2011. 201116 En
(54) SELF-ASSEMBLING TISSUE MODULES
(71) Universiteit Twente, Drienerlolaan 5, 7522 NB Enschede, NL
(72) RIVRON, Nicolas Clément, 10 rue Victor Hugo, F-91260 Juvisy sur orge, FR;
ROUWKEMA, Jeroen, Vrouwenlaan 95, NL-8017 HR Zwolle, NL;
TRUCKENMULLER, Roman, Kuehaeckerstr. 23, 74223 Flein, DE;
LE GAC, Séverine, 13 rue Jean Charcot, F-94490 ormesson s/marne, FR;
VAN BLITTERSWIJK, Clemens Antoni, Coenderssingel 4, NL-8564 HE Ruigahuizen, NL;
VRIJ, Erik Jacob, Noorderhagen 48-D, NL-7511 EM Enschede, NL
(74) Jansen, Cornelis Marinus, VEREENIGDE, Johan de Wittlaan 7, 2517 JR Den Haag, NL

(51) (8) **EP 2318520 ***
C 12N 5/0775
C 12N 5/02
A 61K 35/12
(30) US 07.05.2009. 215621 P
US 25.07.2008. 137058 P
US 10.11.2008. 198861 P
(86) PCT/US2009004334 27.07.2009.
(96) EP 09800702.4 27.07.2009. En
(87) WO2010011352 28.01.2010. 201004
(97) EP 2318520 11.05.2011. 201119 En
(54) COMPOSITIONS FOR MESODERM DERIVED ISL1+ MULTIPOTENT CELLS (IMPS), EPICARDIAL PROGENITOR CELLS (EPCS) AND MULTIPOTENT CXCR4+CD56+ CELLS (C56CS) AND METHODS OF USE
(71) THE UNIVERSITY OF GEORGIA RESEARCH FOUNDATION, INC., 633 Boyd Graduate Studies Research Center, DW Brooks Drive, Athens, Georgia 30602-7411, US
(72) DALTON, Stephen, 1030 Coday Bluff, Athens, GA 30606, US;
REYNOLDS, David, 300 Carrington DR., Athens, GA 30605, US
(74) Dall'Olio, Giancarlo, Invention S.r.l., Via delle Armi 1, 40137 Bologna, IT

(51) (8) **EP 2297304 ***
C 12N 5/08
A 61K 35/28
(30) EP 07.05.2008. 08155768

(86) PCT/EP2009055559 07.05.2009.
(96) EP 09742132.5 07.05.2009. En
(87) WO2009135914 12.11.2009. 200946
(97) EP 2297304 23.03.2011. 201112 En
(54) HUMAN BONE-FORMING CELLS IN THE TREATMENT OF CONDITIONS AND BONE DISEASES ASSOCIATED WITH IMMUNODEFICIENCY OR IMMUNOSUPPRESSION
(71) Bone Therapeutics S.A., Rue Adrienne Bolland 8, 6041 Gosselies, BE
(72) ALBARANI, Valentina, Rue du Docteur 36, B-1160 Brussels, BE;
BASTIANELLI, Enrico, Avenue de la Libération 41, B-1640 Rhode-Saint-Gense, BE;
BADOER, Cindy, Alfred Algoetstraat 8, B-1750 Sint-Kwintens-Lennik, BE;
PESESSE, Xavier, Rue de Radoux 98, B-1430 Bierghes, BE
(74) Michalík, Andrej, De Clercq & Partners cvba, E. Gevaertdreef 10a, 9830 Sint-Martens-Latem, BE

(51) (8) **EP 2313496 ***
C 12N 5/10
C 12N 5/00
(30) US 21.07.2008. 82410 P
(86) PCT/US2009051242 21.07.2009.
(96) EP 09800871.7 21.07.2009. En
(87) WO2010011644 28.01.2010. 201004
(97) EP 2313496 27.04.2011. 201117 En
(54) DIFFERENTIATED ANUCLEATED CELLS AND METHOD FOR PREPARING THE SAME
(71) Taiga Biotechnologies, Inc., 12635 East Montview Boulevard, Aurora, CO 80045-7336, US
(72) REFAELI, Yosef, 843 Garfield Street, Denver, CO 80206, US;
TURNER, Brian, Curtis, 655 S. Glencoe Street, Denver, CO 80246, US
(74) Wilkinson, Marc George, et al, HLBBshaw, Merlin House, Falconry Court, Baker's Lane, Epping, Essex CM16 5DQ, GB

(51) (8) **EP 2236600**
C 12N 9/16
C 12N 15/55
C 12N 15/11
C 12P 21/02
C 12N 1/20
A 23K 1/165
(30) GB 18.10.2004. 0423139
(96) EP 10170532.5 17.10.2005. En
(97) EP 2236600 06.10.2010. 201040 En
(54) Phytases
(71) Danisco A/S, Langebrogade 1, PO Box 17, 1001 Copenhagen K, DK
(72) Miasnikov, Andrei, Tvärantie 92, 10160 Degerby, FI;
Kumar, Vijay, Hämeentie 35, 40, 00500 Helsinki, FI;
Kensch, Oliver, Nattermannallee 1, 50829 Cologne, DE;
Pellengahr, Klaus, Nattermannallee 1, 50829 Cologne, DE;
Leuthner, Birgitta, Nattermannallee 1, 50829 Cologne, DE;
Kettling, Ulrich, Nattermannallee 1, 50829 Cologne, DE;
Koltermann, Andre, Nattermannallee 1, 50829 Cologne, DE
(74) Harding, Charles Thomas, D Young & Co LLP, 120 Holborn, London, EC1N 2DY, GB

(51) (8) **EP 2264156**
C 12N 9/16
C 12N 15/55
C 12N 15/11
C 12P 21/02
C 12N 1/20
A 23K 1/165
(30) GB 18.10.2004. 0423139
(96) EP 10170534.1 17.10.2005. En
(97) EP 2264156 22.12.2010. 201051 En
(54) Phytases
(71) Danisco A/S, Langebrogade 1, PO Box 17, 1001 Copenhagen K, DK
(72) Miasnikov, Andrei, Tvärantie 92v, 10160 Degerby, FI;
Kumar, Vijay, Hämeentie 35, 40, 00500 Helsinki, FI;
Kensch, Oliver, Nattermannallee 1, 50829 Cologne, DE;
Pellengahr, Klaus, Nattermannallee 1, 50829 Cologne, DE;
Leuthner, Birgitta, Nattermannallee 1, 50829 Cologne, DE;
Kettling, Ulrich, Nattermannallee 1, 50829 Cologne, DE;
Koltermann, Andre, Nattermannallee 1, 50829 Cologne, DE
(74) Harding, Charles Thomas, D Young & Co LLP, 120 Holborn, London, EC1N 2DY, GB

(51) (8) **EP 2318524 ***
C 12N 9/42
C 12N 15/74
C 12P 21/02
C 12N 15/62
C 12P 7/10
(30) EP 31.07.2008. 08290739
EP 28.11.2008. 08291120
(86) PCT/EP2009059875 30.07.2009.
(96) EP 09781293.7 30.07.2009. En
(87) WO2010012805 04.02.2010. 201005
(97) EP 2318524 11.05.2011. 201119 En
(54) CONSTRUCTS AND METHODS FOR THE PRODUCTION AND SECRETION OF POLYPEPTIDES
(71) Total S.A., 2, place Jean Millier, La Défense 6, 92400 Courbevoie, FR;
Le Centre National De La Recherche Scientifique, (CNRS), 3, rue Michel Ange, 75794 Paris Cedex 16, FR;
L'Universite De La Mediterranee, Jardin du Pharo, 58 Boulevard Charles-Livon, 13284 Marseille Cedex 7, FR;
L'Universite De Provence, 3 Place Victor Hugo, 13331 Marseille Cedex 3, FR;
L'Institut National Des Sciences Appliquees (INSA), 135 Avenue de Rangueil, 31077 Toulouse Cedex 4, FR
(72) FIEROBE, Henri-Pierre, 31 chemin Joseph Aiguier, F-13009 Marseille, FR;
MINGARDON, Florence, 275 S. Oak Knoll Ave 15, Pasadena, California 91101, US;
CHANAL-VIAL, Angélique, 3 place Eugne Bertrand, F-13012 Marseille, FR
(74) Paemen, Liesbet R.J., et al, De Clercq & Partners cvba, Edgard Gevaertdreef 10 a, 9830 Sint-Martens-Latem, BE

(51) (8) **EP 2308967**
C 12N 9/64
(30) US 12.04.2004. 561720 P
(96) EP 10181426.7 12.04.2005. En
(97) EP 2308967 13.04.2011. 201115 En
(54) Cleavage of VEGF and VEGF receptor by wildtype and mutant MT-SP1

(71) Catalyst Biosciences, Inc., 290 Utah Avenue, South San Francisco, CA 94080, US
(72) Ruggles, Sandra, 290 Utah Avenue, San Francisco, CA 94080, US;
Nguyen, Jack, 290 Utah Avenue, San Francisco, CA 94080, US
(74) Baldock, Sharon Claire, Boult Wade Tennant, Verulam Gardens, 70 Gray's Inn Road, London WC1X 8BT, GB

(51) (8) **EP 2297317** *
C 12N 9/68
C 12P 21/06
(30) US 04.06.2008. 58677 P
(86) PCT/US2009046152 03.06.2009.
(96) EP 09759358.6 03.06.2009. En
(87) WO2009149199 10.12.2009. 200950
(97) EP 2297317 23.03.2011. 201112 En
(54) COMPOSITION, METHOD AND KIT FOR PREPARING PLASMIN
(71) Talecris Biotherapeutics, Inc., 4101 Research Commons Suite 300, 79 T.W. Alexander Drive, Research Triangle Park NC 27709, US
(72) KOEPF, Edward, 26 Westridge Drive, Durham, NC 27713, US;
ZIMMERMAN, Thomas, P., 6209 Braes Meadow Cir., Raleigh, NC 27612, US
(74) HOFFMANN EITLE, Patent- und Rechtsanwälte, Arabellastraße 4, 81925 München, DE

(51) (8) **EP 2310499** *
C 12N 9/92
C 12P 7/10
C 12R 1/865
(30) GB 04.07.2008. 0812318
US 17.07.2008. 81535 P
(86) PCT/IB2009052916 03.07.2009.
(96) EP 09773023.8 03.07.2009. En
(87) WO2010001363 07.01.2010. 201001
(97) EP 2310499 20.04.2011. 201116 En
(54) MICROORGANISM EXPRESSING ALDOSE-1-EPIMERASE
(71) Terranol A/S, Building 223, Søltofts Plads, 2800 Lyngby, DK
(72) SIBBESEN, Ole, Værebrovej 117B, DK-2880 Bagsværd, DK;
RØNNOW, Birgitte, Store Kongensgade 130, 2, DK-1264 Copenhagen K, DK;
ANDERSEN, Thomas, Hvid, Nimbusparken 5 st., DK-2000 Frederiksberg, DK
(74) Wroe, Stephanie, et al, D Young & Co LLP, 120 Holborn, London, EC1N 2DY, GB

(51) (8) **EP 2307543** *
C 12N 15/09
(30) EP 12.06.2008. 08158168
US 16.06.2008. 61959 P
(86) PCT/EP2009057278 12.06.2009.
(96) EP 09761784.9 12.06.2009. En
(87) WO2009150222 17.12.2009. 200951
(97) EP 2307543 13.04.2011. 201115 En
(54) IMPROVED PROTEIN EXPRESSION SYSTEM
(71) Expres2ion Biotechnologies APS, Fremtidsvej 3, 2970 Hørsholm, DK
(72) DYRING, Charlotte, Hannelundsvej 10, DK-2960 Rungsted Kyst, DK;
DE JONGH, Willem Adriaan, Dalgas Have 24, 2 C, DK-2000 Frederiksberg, DK;
RASMUSSEN, Peter Birk, Poul Reumerts Vej 37, DK-2500 Valby, DK;
LYKKEGAARD, Helene, Amtmandsvej 38, DK-3400 Hillerød, DK
(74) Inspicos A/S, Kogle Allé 2, P.O. Box 45, 2970 Hørsholm, DK

(51) (8) **EP 2319923**
C 12N 15/09
C 12N 1/15
C 12N 1/21
C 12P 17/18
(30) JP 24.07.2008. 2008190862
JP 20.10.2008. 2008270294
JP 30.01.2009. 2009020591
(86) PCT/JP2009063293 24.07.2009.
(96) EP 09800469.0 24.07.2009. Ja
(87) WO2010010955 28.01.2010. 201004
(97) EP 2319923 11.05.2011. 201119 En
(54) PYRIPYROPENE A BIOSYNTHETIC GENE
(71) Meiji Seika Kaisha, Ltd., 4-16, Kyobashi 2-chome, Chuo-ku, Tokyo 104-8002, JP
(72) ANZAI, Hiroyuki, 504-101 the Lodgings, for Staff of the Ibaraki University, 3998 Ami, Ami-machi, Inashiki-gun, Ibaraki 300-0331, JP;
YAMAMOTO, Kentaro, c/o Meiji Seika Kaisha Ltd., 760 Morooka-cho, Kouhoku-ku, Yokohama-shi, Kanagawa 222-8567, JP;
TSUCHIDA, Mariko, c/o Meiji Seika Kaisha Ltd., 760 Morooka-cho, Kouhoku-ku, Yokohama-shi, Kanagawa 222-8567, JP;
OYAMA, Kazuhiko, c/o Meiji Seika Kaisha Ltd., 760 Morooka-cho, Kouhoku-ku, Yokohama-shi, Kanagawa 222-8567, JP;
MITOMI, Masaaki, c/o Meiji Seika Kaisha Ltd., 760 Morooka-cho, Kouhoku-ku, Yokohama-shi, Kanagawa 222-8567, JP
(74) Ahner, Francis, et al, Cabinet Régimbeau, 20, rue de Chazelles, F-75847 Paris Cedex 17, FR

(51) (8) **EP 2300609** *
C 12N 15/11
C 07K 14/255
A 61K 39/39
(30) EP 25.06.2008. 08305327
(86) PCT/EP2009057836 23.06.2009.
(96) EP 09769254.5 23.06.2009. En
(87) WO2009156405 30.12.2009. 200953
(97) EP 2300609 30.03.2011. 201113 En
(54) NOVEL IMMUNOADJUVANT FLAGELLIN-BASED COMPOUNDS AND USE THEREOF
(71) INSERM - Institut National de la Santé et de la, Recherche Médicale, 101, rue de Tolbiac, 75013 Paris, FR;
INSTITUT PASTEUR DE LILLE, 1, rue du Professeur Calmette, 59800 Lille, FR
(72) SIRARD, Jean-Claude, U801 INSERM, Institut de Biologie, 1, rue du Professeur Calmette, Site Calmette, 59021 Lille, FR

(74) Robertson, James Stuart, GlaxoSmithKline, Global Patents CN925.1, 980 Great West Road, Brenford Middlesex TW8 9GS, GB

(51) (8) **EP 2310506 ***
C 12N 15/11
A 61K 31/7088
(30) EP 15.07.2008. 08104754
US 16.07.2008. 81135 P
(86) PCT/IB2009006407 15.07.2009.
(96) EP 09786086.0 15.07.2009. En
(87) WO2010007522 21.01.2010. 201003
(97) EP 2310506 20.04.2011. 201116 En
(54) RNA ANTAGONISTS TARGETING GLI2
(71) Santaris Pharma A/S, Kogle Alle 6, 2970 Hørsholm, DK
(72) HEDTJÄRN, Maj, Kenny Drews vej 83, 2.Leijl, 2450 Copenhangen, DK
(74) Wroe, Stephanie, D Young & Co LLP, 120 Holborn, London, EC1N 2DY, GB

(51) (8) **EP 2221378**
C 12N 15/113
(30) US 22.12.2005. 753041
(96) EP 10159498.4 22.12.2006. En
(97) EP 2221378 25.08.2010. 201034 En
(54) Compositions and methods for regulating complement system
(71) OPKO Pharmaceuticals, LLC, 4400 Biscayne Boulevard, Miami, FL 33137, US
(72) Reich, Samuel Jotham, 3437 Prairie Avenue, Miami Beach, FL 33140, US;
Dejneka, Nadine, 200 North Wynnewood Avenue, Apartment B412, Wynnewood, Pennsylvania 19096, US
(74) Ouzman, Beverley Nicola Claire, Murgitroyd & Company, Scotland House, 165-169 Scotland Street, Glasgow G5 8PL, GB

(51) (8) **EP 2224004**
C 12N 15/113
A 61K 31/713
(30) EP 15.06.2007. 07110376
EP 13.08.2007. 07114265
(96) EP 10163496.2 13.06.2008. En
(97) EP 2224004 01.09.2010. 201035 En
(54) RNAi inhibition of alpha-ENaC expression
(71) Novartis AG, Lichtstrasse 35, 4056 Basel, CH
(72) Van Heeke, Gino, Novartis Horsham Research Centre, Wimblehurst Road, Horsham, West Sussex RH12 5AB, GB;
Hickman, Emma, Novartis Horsham Research Centre, Wimblehurst Road, Horsham, West Sussex RH12 5AB, GB;
Danahay, Henry Luke, Novartis Horsham Research Centre, Wimblehurst Road, Horsham, West Sussex RH12 5AB, GB;
Tan, Pamela, Kalte Marter 8, 95326 Kulmbach, DE;
Geick, Anke, Holderlin-Anlage 12, 95447 Bayreuth, DE;
Vornlocher, Hans-Peter, Albert-Einstein-Ring 43a, 95448 Bayreuth, DE
(74) Kassow, Anders, Novartis Pharma AG, Patent Department, 4002 Basel, CH

(51) (8) **EP 2224005**
C 12N 15/113
A 61K 31/713
(30) EP 15.06.2007. 07110376
EP 13.08.2007. 07114265
(96) EP 10163498.8 13.06.2008. En
(97) EP 2224005 01.09.2010. 201035 En
(54) RNAi inhibition of alpha-ENaC expression
(71) Novartis AG, Lichtstrasse 35, 4056 Basel, CH
(72) Van Heeke, Gino, Novartis Horsham Research Centre, Wimblehurst Road, Horsham, West Sussex RH12 5AB, GB;
Hickman, Emma, Novartis Horsham Research Centre, Wimblehurst Road, Horsham, West Sussex RH12 5AB, GB;
Danahay, Henry Luke, Novartis Horsham Research Centre, Wimblehurst Road, Horsham, West Sussex RH12 5AB, GB;
Tan, Pamela, Kalte Marter 8, 95326 Kulmbach, DE;
Geick, Anke, Holderlin-Anlage 12, 95447 Bayreuth, DE;
Vornlocher, Hans-Peter, Albert-Einstein-Ring 43a, 95448 Bayreuth, DE
(74) Kassow, Anders, et al, Novartis Pharma AG, Patent Department, 4002 Basel, CH

(51) (8) **EP 2294197 ***
C 12N 15/12
C 07K 14/47
A 61K 38/17
(30) US 30.05.2008. 57762 P
(86) PCT/US2009045880 01.06.2009.
(96) EP 09755823.3 01.06.2009. En
(87) WO2009146463 03.12.2009. 200949
(97) EP 2294197 16.03.2011. 201111 En
(54) VARIANT HHIP1 PROTEIN AND METHODS AND USES THEREOF
(71) Genentech, Inc., 1 DNA Way, South San Francisco, CA 94080, US;
Curis, Inc., 45 Moulton Street, Cambridge, MA 02138, US
(72) BOSANAC, Ivan, 2751 South Norfolk Street, Apt 205, San Mateo, CA 94403, US;
HYMOWITZ, Sarah, G., 1050 Francisco Street, San Francisco, CA 94109, US;
LAZARUS, Robert, A., 237 Hillcrest Boulevard, Millbrae, CA 94030, US;
MAUN, Henry, R., 1758 10th Ave, Apt 8, San Francisco, CA 94122, US;
SCALES, Suzanna, J., 4171 George Avenue 3, San Mateo, CA 94403, US;
WEN, Xiaohui, 3143 David Court, Palo Alto, CA 94303, US
(74) Walton, Seán Malcolm, et al, Mewburn Ellis LLP, 33 Gutter Lane, London, EC2V 8AS, GB

(51) (8) **EP 1939296**
C 12N 15/52
C 12P 13/08
C 12N 9/16
(30) WO 18.12.2003. PCT/IB03/06456
(96) EP 07123936.2 17.12.2004. En
(97) EP 1939296 02.07.2008. 200827 En
(54) Methods for the preparation of a fine chemical by fermentation
(71) BASF SE, 67056 Ludwigshafen, DE
(72) Zelder, Oskar, Franz-Stützel-Straße 8, 67346 Speyer, DE;
Klopprogge, Corinna, Zähringer Straße 39, 68239 Mannheim, DE;
Kröger, Burkhard, Im Waldhof 1, 67117 Limburgerhof, DE;
Schröder, Hartwig, Benzstraße 4, 69226 Nußloch, DE;
Haefner, Stefan, Korngasse 28, 67346 Speyer, DE;

Heinzle, Elmar, Senator-Richard-Becker-Straße 48, 66123 Saarbrücken, DE;
Wittmann, Christoph, Am Kalkofen 13, 66127 Saarbrücken, DE;
Kiefer, Patrick, Eugen-Huber-Straße 28a, 8048 Zürich, CH

(51) (8) **EP 2109672 ***
C 12N 15/55
C 12N 9/84
(30) CZ 31.01.2007. 20070082
(86) PCT/IN2007000193 15.05.2007.
(96) EP 07827496.6 15.05.2007. En
(87) WO2008093351 07.08.2008. 200832
(97) EP 2109672 21.10.2009. 200943 En
(54) DNA SEQUENCE ENCODING PENICILLIN ACYLASE, NOVEL RECOMBINANT DNA CONSTRUCTS AND RECOMBINANT MICROORGANISMS CARRYING THIS SEQUENCE
(71) Fermenta Biotech Limited, Dil Complex, Ghodbunder Road, Majiwada, Thane (W) 400 610, MAH, IN;
Mikrobiologicky Ustac Avcr V.v.i., Videnska 1083, Praha 4-Krc - 142 20, CZ
(72) KYSLIK, Pavel, Estonska 2, Praha 10-101 00, CZ;
STEPANEK, Vaclav, Smolikova 1041/7, Praha 5-Kosire -150 00, CZ;
HOLLEROVA, Lenka, Sturova 55, Praha 4 - 142 20, CZ;
BECKA, Stanislav, Michnova 1623/5, Praha 4 - 142 02, CZ;
VYASARAYANI, Williams, Rajasekar, N·. 403, 19th Building, Tulsidham Complex, S.V.Road, Majiwada, Thane (W) 400 610, Maharashtra, IN;
ANUPAMA, Datla, 42/B, Dhananjay, Presidency CHS Ltd., 8th North South Road, Near Cooper Hospital, Vile Parle, Mumbai 400 049, Maharashtra, IN;
PLHACKOVA, Kamila, Famfulikova 1136/8, Praha 8 - Kobylisy - 182 00, CZ;
MARSALEK, Jaroslav, Spojovaci 561, Kourim - 281 61, CZ
(74) Brand, Thomas Louis, W.P. Thompson & Co., 55 Drury Lane, London WC2B 5SQ, GB

(51) (8) **EP 2315834 ***
C 12N 15/60
C 12N 15/61
C 12N 9/88
C 12N 9/90
C 07K 14/35
A 61K 38/51
A 61K 38/52
A 61K 39/04
(30) US 25.07.2008. 83699 P
(86) PCT/EP2009059585 24.07.2009.
(96) EP 09781057.6 24.07.2009. En
(87) WO2010010179 28.01.2010. 201004
(97) EP 2315834 04.05.2011. 201118 En
(54) THE TUBERCULOSIS RV2386C PROTEIN, COMPOSITIONS AND USES THEREOF
(71) GlaxoSmithKline Biologicals S.A., rue de l'Institut, 89, 1330 Rixensart, BE;
Glaxo Group Limited, Glaxo Wellcome House, Berkeley Avenue, Greenford, Middlesex UB6 0NN, GB
(72) BROWN, James, GlaxoSmithKline, 1250 S. Collegeville Road, P.O. Box 5089, Collegeville, PA 19426, US;
METTENS, Pascal, GlaxoSmithKline Biologicals S.A., Rue de l'Institut 89, B-1330 Rixensart, BE;
MURPHY, Dennis, c/o GlaxoSmithKline, 1250 S. Collegeville Road, P.O. Box 5089, Collegeville, PA 19426, US
(74) Dalton, Marcus Jonathan William, GlaxoSmithKline, Corporate Intellectual Property (CN9.25.1), 980 Great West Road, Brentford, Middlesex TW8 9GS, GB

(51) (8) **EP 2304034 ***
C 12N 15/62
C 12N 15/861
A 61K 48/00
A 61K 39/00
(30) US 22.05.2008. 55332 P
(86) PCT/EP2009056053 19.05.2009.
(96) EP 09749825.7 19.05.2009. En
(87) WO2009141335 26.11.2009. 200948
(97) EP 2304034 06.04.2011. 201114 En
(54) AN ADAPTER MOLECULE FOR THE DELIVERY OF ADENOVIRUS VECTORS
(71) Proyecto de Biomedicina Cima, S.L., Avda. Pío XII, 22 Oficina 1, 31008 Pamplona - Navarra, ES;
The UAB Research Foundation, 1530 3rd Avenue South, AB 770, Birmingham, Alabama 35294-0111, US
(72) PEREBOEV, Alexander, THE UAB RESEARCH FOUNDATION, 1530 3rd Avenue South, AB 770, Birmingham, Alabama 35294-0111, US;
TSULADZE, George, THE UAB RESEARCH FOUNDATION, 1530 3rd Avenue South, AB 770, Birmingham, Alabama 35294-0111, US;
BOGDASHIN, Igor, THE UAB RESEARCH FOUNDATION, 1530 3rd Avenue South, AB 770, Birmingham, Alabama 35294-0111, US;
ECHEVERRIA BEISTEGUI, Itziar, ICT (D.P.I.), Avenida de Pío XII 53, E-31008 Pamplona - Navarra, ES;
LASARTE SAGASTIBELZA, Juan José, ICT (D.P.I.), Avenida de Pío XII 53, E-31008 Pamplona - Navarra, ES;
PRIETO VALTUEAA, Jesús María, ICT (D.P.I.), Avenida de Pío XII 53, E-31008 Pamplona - Navarra, ES;
SAROBE UGARRIZA, Pablo, ICT (D.P.I.), Avenida de Pío XII 53, E-31008 Pamplona - Navarra, ES
(74) ABG Patentes, S.L., Avenida de Burgos 16D, Edificio Euromor, 28036 Madrid, ES

(51) (8) **EP 2310508 ***
C 12N 15/62
C 07K 14/715
C 07K 16/28
C 07K 16/24
A 61K 38/17
(30) US 02.07.2008. 134091 P
US 02.07.2008. 134090 P
US 02.07.2008. 134089 P
US 02.07.2008. 134088 P
US 02.07.2008. 134085 P
US 02.07.2008. 134087 P
US 02.07.2008. 134086 P
US 26.05.2009. 181232 P
(86) PCT/US2009049616 02.07.2009.
(96) EP 09774567.3 02.07.2009. En
(87) WO2010003118 07.01.2010. 201001
(97) EP 2310508 20.04.2011. 201116 En
(54) TGF-B ANTAGONIST MULTI-TARGET BINDING PROTEINS
(71) Emergent Product Development Seattle, LLC, 2273 Research Boulevard, Suite 400, Rockville, MD 20850, US

(72) LOFQUIST, Alan, Keith, 9422 N.e. 130th Place, Kirkland, WA 98034, US;
BAUM, Peter, Robert, 6027 - 34th Avenue N.e., Seattle, WA 98115, US;
THOMPSON, Peter, Armstrong, 14075 N.e. 30th Place, Bellevue, WA 98007, US;
MISHER, Lynda, 10614 - 10th Place N.e., Seattle, WA 98125, US
(74) Jappy, John William Graham, Gill Jennings & Every LLP, The Broadgate Tower, 20 Primrose Street, London EC2A 2ES, GB

(51) (8) **EP 2295591**
C 12N 15/861
C 12N 15/85
(30) ES 16.05.2008. 200801434
(86) PCT/ES2009070154 13.05.2009.
(96) EP 09745870.7 13.05.2009. Es
(87) WO2009138544 19.11.2009. 200947
(97) EP 2295591 16.03.2011. 201111 En
(54) SELF-INACTIVATING HELPER ADENOVIRUSES FOR THE PRODUCTION OF HIGH-CAPACITY RECOMBINANT ADENOVIRUSES
(71) Proyecto de Biomedicina Cima, S.L., Avenida. Pío XII, 22 Oficina 1, 31008 Pamplona - Navarra, ES
(72) GONZÁLEZ APARICIO, Manuela, Instituto Científico Y Tecnológico De Navarra, S.A., D.P.I., Avda. Pío XII 53, E-31008 Pamplona - Navarra, ES;
HERNÁNDEZ ALCOCEBA, Rubén, Instituto Científico Y Tecnológico De Navarra, S.a., D.P.I., Avda. Pío XII 53, E-31008 Pamplona - Navarra, ES;
MAULEON MAYORA, Miren Itsaso, Instituto Científico Y Tecnológico De Navarra, S.a., D.P.I., Avda. Pío XII 53, E-31008 Pamplona - Navarra, ES
(74) ABG Patentes, S.L., Avenida de Burgos 16D, Edificio Euromor, 28036 Madrid, ES

(51) (8) **EP 2298925**
C 12N 15/861
(30) ES 04.06.2008. 200801682
(86) PCT/ES2009070194 01.06.2009.
(96) EP 09757650.8 01.06.2009. Es
(87) WO2009147271 10.12.2009. 200950
(97) EP 2298925 23.03.2011. 201112 En
(54) SYSTEM FOR PACKAGING HIGH-CAPACITY ADENOVIRUSES
(71) Proyecto de Biomedicina Cima, S.L., Avenida. Pío XII, 22 Oficina 1, 31008 Pamplona - Navarra, ES
(72) QIAN, Cheng, ICT (D.P.I.), Avda. Pío XII 53, E-31008 Pamplona - Navarra, ES;
MOURIAO LÓPEZ, Susana, ICT (D.P.I.), Avda. Pío XII 53, E-31008 Pamplona - Navarra, ES;
PRIETO VALTUEAA, Jesús María, ICT (D.P.I.), Avda. Pío XII 53, E-31008 Pamplona - Navarra, ES
(74) ABG Patentes, S.L., Avenida de Burgos 16D, Edificio Euromor, 28036 Madrid, ES

(51) (8) **EP 2304040 ***
C 12P 5/02
C 12N 15/63
C 12N 9/88
C 12N 15/60
C 12N 1/20
C 12N 1/21
(30) FR 04.07.2008. 0854550
US 08.07.2008. 78824
(86) PCT/FR2009051332 06.07.2009.
(96) EP 09772760.6 06.07.2009. Fr
(87) WO2010001078 07.01.2010. 201001
(97) EP 2304040 06.04.2011. 201114 Fr
(54) PRODUCTION OF ALKENES BY ENZYMATIC DECARBOXYLATION OF 3-HYDROXYALKANOIC ACIDS
(71) Marliere, Philippe, 23 rue Madeleine Crenon, 92330 Sceaux, FR
(72) Marliere, Philippe, 23 rue Madeleine Crenon, 92330 Sceaux, FR
(74) Vossius & Partner, Siebertstrasse 4, 81675 München, DE

(51) (8) **EP 2297334 ***
C 12Q 1/37
C 07K 14/54
G 01N 33/68
(30) US 04.06.2008. 58679 P
(86) PCT/US2009045673 29.05.2009.
(96) EP 09759119.2 29.05.2009. En
(87) WO2009148958 10.12.2009. 200950
(97) EP 2297334 23.03.2011. 201112 En
(54) BIOMARKER FOR ASSESSING RESPONSE TO CHYMASE TREATMENT
(71) Janssen Pharmaceutica, N.V., Turnhoutseweg 30, 2340 Beerse, BE
(72) ZHANG, Jimmy, 35 Hastings Road, Belle Mead, 08502, US;
D'ANDREA, Michael, 14 Anders Drive, Cherry Hill, NJ 08003, US;
BELKOWSKI, Stanley, M., 706 Sandra Lane, Norristown, PA 19403, US
(74) Warner, James Alexander, et al, Carpmaels & Ransford, One Southampton Row, London, WC1B 5HA, GB

(51) (8) **EP 2061906 ***
C 12Q 1/68
(30) US 12.09.2006. 825369 P
(86) PCT/US2007078068 10.09.2007.
(96) EP 07842176.5 10.09.2007. En
(87) WO2008033782 20.03.2008. 200812
(97) EP 2061906 27.05.2009. 200922 En
(54) METHODS AND COMPOSITIONS FOR THE DIAGNOSIS AND TREATMENT OF LUNG CANCER USING PDGFRA, KIT OR KDR GENE AS GENETIC MARKER
(71) Genentech, Inc., 1 DNA Way, South San Francisco CA 94080-4990, US
(72) CHANT, John, 1170 Tuolumne Court, Millbrae, CA 94030, US;
GUERRERO, Anthony, S., 323 Lexington Street, San Francisco, CA 94110, US;
HAVERTY, Peter, 102 Anderson Street, San Francisco, CA 94110, US;

HONCHELL, Cynthia, 1243 17th Avenue, San Francisco, CA 94122, US;
JUNG, Kenneth, 1500 12th Avenue, Apartment 1, San Francisco, CA 94122, US;
WU, Thomas, D., 41 Nevada Street, San Francisco, CA 94110, US
(74) Walton, Seán Malcolm, et al, Mewburn Ellis LLP, 33 Gutter Lane, London, EC2V 8AS, GB

(51) (8) **EP 2233584**
C 12Q 1/68
(30) EP 24.09.2007. 07291134
(96) EP 10163295.8 13.09.2008. En
(97) EP 2233584 29.09.2010. 201039 En
(54) Use of CLEC1B for the determination of cardiovascular and thrombotic risk
(71) sanofi-aventis, 174, Avenue de France, 75013 Paris, FR
(72) Kozian, Detlef, DR., c/o Sanofi-Aventis Deutschland GmbH, 65926 Frankfurt am Main, DE;
Wonerow, Peter, DR., c/o Sanofi-Aventis Deutschland GmbH, 65926 Frankfurt am Main, DE;
Herrmann, Matthias, DR., c/o Sanofi-Aventis Deutschland GmbH, 65926 Frankfurt am Main, DE
(74) Körner, Kathrin, et al, Sanofi-Aventis Deutschland GmbH, Patente Deutschland, Industriepark Höchst, Gebäude K801, 65926 Frankfurt am Main, DE

(51) (8) **EP 2297356 ***
C 12Q 1/68
(30) GB 16.06.2008. 0811002
(86) PCT/US2009046843 10.06.2009.
(96) EP 09767491.5 10.06.2009. En
(87) WO2009155181 23.12.2009. 200952
(97) EP 2297356 23.03.2011. 201112 En
(54) SYSTEM AND METHOD FOR NUCLEIC ACIDS SEQUENCING BY PHASED SYNTHESIS
(71) PLC Diagnostics, Inc., 5743 Corsa Avenue, Suite 119, Westlake Village, CA 91362, US
(72) DUER, Reuven, 192 Odebolt Drive, Thousand Oaks, CA 91360, US;
HERRON, James, 2965 S. Plateau Drive, Salt Lake City, UT 84109, US
(74) Denison, Christopher Marcus, et al, Mewburn Ellis LLP, 33 Gutter Lane, London, EC2V 8AS, GB

(51) (8) **EP 2305837**
C 12Q 1/68
(30) DK 11.05.2005. 200500680
(96) EP 10075440.7 11.05.2006. En
(97) EP 2305837 06.04.2011. 201114 En
(54) Method for diagnosis and treatment of a mental disease
(71) Aarhus Universitet, Nordre Ringgade 1, 8000 Zrhus C, DK;
Region Midtjylland, Skottenborg 26, 8800 Viborg, DK
(72) Ewald, Henrik, ., Deceased, DK;
Børglum, Anders, Bekkasinvej 2, DK-8270 Hoejbjerg, DK;
Severinsen, Jacob, Snogebæksvej 13, vær, 27, 8210 Zrhus C, DK;
Mors, Ole, Permelillevej 7, 8240 Risskov, DK;
Muir, Walter, The Chestnuts, Eshiels, Peebles EH45 8NA, GB;
Blackwood, Douglas, 7 Pitsligo Road, Edinburgh EH10 4RY, GB
(74) Didmon, Mark, Potter Clarkson LLP, Park View House, 58 The Ropewalk, Nottingham NG1 5DD, GB

(51) (8) **EP 2310530 ***
C 12Q 1/68
(30) EP 02.07.2008. 08305372
US 02.07.2008. 77656 P
(86) PCT/IB2009006844 02.07.2009.
(96) EP 09772923.0 02.07.2009. En
(87) WO2010001263 07.01.2010. 201001
(97) EP 2310530 20.04.2011. 201116 En
(54) METHOD FOR DIAGNOSING AND PREDICTING CEREBELLAR ATAXIA
(71) Institut National de la Recherche, Agronomique (INRA), 145, rue de l'Université, 75007 Paris, FR;
Ecole Veterinaire De Maisons Alfort, 7 avenue du Général de Gaulle, 94700 Maisons Alfort, FR
(72) ABITBOL, Marie, 31 avenue Mozart, F-77680 Roissy En Brie, FR;
BLOT, Stéphane, 2 rue Jean Gabin, F-94410 Saint Maurice, FR
(74) Domenego, Bertrand, Cabinet Lavoix, 2, place d'Estienne d'Orves, 75441 Paris Cedex 09, FR

(51) (8) **EP 2313522 ***
C 12Q 1/68
(30) EP 24.07.2008. 08104874
US 25.07.2008. 135970 P
(86) PCT/EP2009059283 20.07.2009.
(96) EP 09780816.6 20.07.2009. En
(87) WO2010010057 28.01.2010. 201004
(97) EP 2313522 27.04.2011. 201117 En
(54) USE OF GENETIC MARKERS FOR IDENTIFYING THE RESPONSE TO INTERFERON TREATMENT IN MULTIPLE SCLEROSIS PATIENTS
(71) Merck Serono S.A., Centre Industriel, 1267 Coinsins, CH
(72) MONNET, Emmanuel, 1 Avenue de Genve, F-74160 Saint Julien en Genevois, FR;
BOUZEKRI, Nourdine, 35 Chemin des Patinires, F-74100 Vétraz-Monthoux, FR
(74) Merck Serono SA - Geneva, Intellectual Property, 9, chemin des Mines, 1202 Geneva, CH

(51) (8) **EP 2316970**
C 12Q 1/68
(30) ES 04.07.2008. 200802007
(86) PCT/IB2009052936 06.07.2009.
(96) EP 09764040.3 06.07.2009. Es
(87) WO2010001369 07.01.2010. 201001
(97) EP 2316970 04.05.2011. 201118 En
(54) METHODS FOR THE TREATMENT AND DIAGNOSIS OF CANCER
(71) Traslational Cancer Drugs Pharma, S.L., C/ Barceló 15, 5r izq., 28004 Madrid, ES
(72) LACAL SANJUÁN, Juan Carlos, San Luis de Potosí 16, Urbanización el Gasco, E-28250 Torrelodones - Madrid, ES;
RAMÍREZ DE MOLINA, Ana, Enrique Granados 4 p.C. Bajo B, E-28224 Pozuelo de Alarcón - Madrid, ES;
GALLEGO ORTEGA, David, Instituto de Investigaciones Biomédicas, Arturo Duperier 4, E-28029 Madrid, ES
(74) ABG Patentes, S.L., Avenida de Burgos 16D, Edificio Euromor, 28036 Madrid, ES

(51) (8) **EP 2318541 ***
C 12Q 1/68
(30) EP 08.08.2008. 08014211
US 11.08.2008. 188613 P
(86) PCT/EP2009005891 06.08.2009.
(96) EP 09777873.2 06.08.2009. En
(87) WO2010015423 11.02.2010. 201006
(97) EP 2318541 11.05.2011. 201119 En
(54) METHODS FOR PLANT FIBER CHARACTERIZATION AND IDENTIFICATION
(71) Bayer BioScience N.V., Technologiepark 38, 9052 Gent, BE
(72) ARIOLI, Antonio, 7307 93rd Street, Lubbock, TX 79424, US;
ENGELEN, Steven, Knaptandstraat 14 - Bus W2, B-9160 Lokeren, BE

(51) (8) **EP 2318545 ***
C 12Q 1/68
(30) US 22.08.2008. 91081 P
US 02.04.2009. 211698 P
(86) PCT/US2009054415 20.08.2009.
(96) EP 09791710.8 20.08.2009. En
(87) WO2010022211 25.02.2010. 201008
(97) EP 2318545 11.05.2011. 201119 En
(54) USE OF A COX-2 INHIBITOR FOR THE TREATMENT OF A COX-2 DEPENDENT DISORDER IN A PATIENT NOT CARRYING HLA ALLELES ASSOCIATED WITH HEPATOTOXICITY
(71) Novartis AG, Lichtstrasse 35, 4056 Basel, CH
(72) LEWITZKY, Steven, 151 Tremont Street Apt. 19P, Boston, MA 02111, US;
MEYER, Joanne, 150 Singletary Lane, Framingham, MA 01702, US;
PAULDING, Charles, 58 Whispering Brook Road, Groton, MA 01450, US;
SINGER, Jonathan, Benjamin, 19 Wyatt Street, Somerville, CT 02143, US
(74) Masselink, Johannes Hendrikus Bernardus, Novartis Pharma AG, Patent Department, 4002 Basel, CH

(51) (8) **EP 2318548 ***
C 12Q 1/68
C 07K 16/32
(30) US 17.04.2009. 170367 P
US 15.08.2008. 189053 P
US 20.02.2009. 208206 P
US 30.09.2008. 194702 P
(86) PCT/US2009054051 17.08.2009.
(96) EP 09791584.7 17.08.2009. En
(87) WO2010019952 18.02.2010. 201007
(97) EP 2318548 11.05.2011. 201119 En
(54) METHODS AND SYSTEMS FOR PREDICTING RESPONSE OF CELLS TO A THERAPEUTIC AGENT
(71) Merrimack Pharmaceuticals, Inc., One Kendall Square, Suite B7201, Cambridge, MA 02139, US
(72) SCHOEBERL, Birgit, 324 Windsor Street, Cambridge, MA 02141, US;
HARMS, Brian, 152 Walter Street, 1, Roslindale, MA 02131, US;
GIBBONS, Francis, David, 2634 Massachusetts Avenue, Lexington, MA 02420, US;
FITZGERALD, Jonathan, Basil, 32 Magnolia Street, Arlington, MA 02474, US;
ONSUM, Matthew, David, 90 Bynner Street, Jamaica Plain, MA 02130, US;
NIELSEN, Ulrik, 18 Thomas Street, Quincy, MA 02169, US;
KUBASEK, William, 153 Waverley, Belmont, MA 02178, US
(74) Woods, Geoffrey Corlett, et al, J.A. Kemp & Co., 14 South Square, Gray's Inn, London, WC1R 5JJ, GB

(51) (8) **EP 2318551 ***
C 12Q 1/68
G 01N 33/68
G 01N 33/53
G 06F 19/00
(30) US 27.08.2008. 92270
(86) PCT/US2009055144 27.08.2009.
(96) EP 09810557.0 27.08.2009. En
(87) WO2010025216 04.03.2010. 201009
(97) EP 2318551 11.05.2011. 201119 En
(54) SYSTEM AND METHODS FOR MEASURING BIOMARKER PROFILES
(71) H. Lundbeck A/S, 9 Ottiliavej, 2500 Valby-Copenhagen, DK
(72) ANTONIJEVIC, Irina, 1201 Rio Vista Drive, Mahwah, NJ 07430, US;
TAMM, Joseph, 103 Buena Vista Avenue, Hawthorne, NJ 07506, US;
ARTYMYSHYN, Roman, 114 Stanton Road, Flemington, NJ 08822, US;
GERALD, Christophe, P.G., 1201 Rio Vista Drive, Mahwah, NJ 07430, US;
VISTISEN, Jan, Bastholm, Aatoften 6, DK-9600 Aars, DK
(74) Conrad, Lars Sparre, et al, H. Lundbeck A/S, Ottiliavej 9, 2500 Valby, DK

(51) (8) **EP 2307585 ***
C 22C 9/00
C 22C 19/03
F 16F 7/00
F 16F 7/02
F 16F 15/00
(30) US 09.07.2008. 134363 P
(86) PCT/US2009049861 08.07.2009.
(96) EP 09812429.0 08.07.2009. En
(87) WO2010053602 14.05.2010. 201019
(97) EP 2307585 13.04.2011. 201115 En
(54) SUPERELASTIC ALLOY STRUCTURAL GEOMETRY FOR ULTRAHIGH MECHANICAL DAMPING
(71) Massachusetts Institute of Technology, 77 Massachusetts Avenue, Cambridge, MA 02139, US
(72) SCHUH, Christopher, A., 141 East Union Street, Ashland, MA 01721, US;
SAN JUAN, Jose, M., Gordoniz 13, 5 Izd, E-48010 Bilbao, ES;
CHEN, Ying, 18 Glendale Avenue, Somerville, MA 02144, US
(74) VALEA AB, Lindholmspiren 5, 417 56 Göteborg, SE

(51) (8) **EP 2057298 ***
C 22C 38/12
(30) DE 01.09.2006. 102006041146
(86) PCT/DE2007001337 27.07.2007.

(96) EP 07801178.0 27.07.2007. De
(87) WO2008028447 13.03.2008. 200811
(97) EP 2057298 13.05.2009. 200920 De
(54) STEEL, AND PROCESSING METHOD FOR THE PRODUCTION OF HIGHER-STRENGTH FRACTURE-SPLITTABLE MACHINE COMPONENTS
(71) Georgsmarienhütte GmbH, Neue Hüttenstrasse 1, 49124 Georgsmarienhütte, DE
(72) Diederichs, Roman, Voxtruper Strasse 96, 49082 Osnabrück, DE;
Stüber DR., Axel, Unter den Eichen 1A, 27367 Sottrum, DE;
Lange, Robert, Wüsten Str.40, 49080 Osnabrück, DE
(74) Röther, Peter, Patentanwälte, Dr. Brundert & Röther, Kolkmannskamp 6, 44879 Bochum, DE

(51) (8) **EP 2251453**
C 23C 16/505
C 23C 16/458
G 01N 15/08
A 61B 5/15
(30) US 13.05.2009. 177984 P
US 24.07.2009. 213904 P
US 17.08.2009. 234505 P
US 14.11.2009. 261321 P
US 20.11.2009. 263289 P
US 11.12.2009. 285813 P
US 25.01.2010. 298159 P
US 29.01.2010. 299888 P
US 26.03.2010. 318197 P
US 02.07.2009. 222727 P
US 11.05.2010. 333625 P
(96) EP 10162757.8 12.05.2010. En
(97) EP 2251453 17.11.2010. 201046 En
(54) Vessel holder
(71) CV Holdings, LLC., 1030 Riverfront Center, P.O.Box 710, Amsterdam, New York 12010, US
(72) Felts, John T., 2624 Calhoun Street, Alameda, CA 94501, US;
Ferguson, John, 797 Greenwood Drive, Auburn, AL 36832, US;
Freedman, Jonathan R., 2213 Brenton Lane, Auburn, AL 36830, US
(74) Maiwald, Walter, Maiwald Patentanwalts GmbH, Elisenhof, Elisenstrasse 3, 80335 München, DE

(51) (8) **EP 2224037**
C 23C 22/53
B 05D 7/14
C 25D 5/48
(96) EP 09002068.6 13.02.2009. De
(97) EP 2224037 01.09.2010. 201035 De
(54) Method for passivating metal substrate belts
(71) H.D. Lenzen Bandverzinkung GmbH & Co. KG, Sedanstrasse 41, 58089 Hagen, DE
(72) Siekmann, Heinz Walter, Siedlerweg 38a, 58638 Iserlohn, DE
(74) Kötter, Ulrich, Körnerstrasse 27, 58095 Hagen, DE

(51) (8) **EP 2224045**
D 01F 9/127
D 01F 9/16
C 01B 31/02
B 01J 37/08
B 01J 21/18
(96) EP 09153958.5 27.02.2009. En
(97) EP 2224045 01.09.2010. 201035 En
(54) Process for producing carbon nanofibres and/or carbon nanotubes
(71) BASF SE, 67056 Ludwigshafen, DE
(72) Hoekstra, J., Salamancapad 175, 3584 DX Utrecht, NL;
Geus, John Wilhelm, Gezichtslaan 100, 3723 GJ Bilthoven, NL;
Jenneskens, L.W., Koninginnelaan 33, 3762 DA Soest, NL
(74) Hatzmann, Martin, Vereenigde, Johan de Wittlaan 7, 2517 JR Den Haag, NL

(51) (8) **EP 2312025**
D 01G 21/00
D 01B 1/00
(30) RU 17.06.2008. 2008123452
(86) PCT/RU2009000407 14.08.2009.
(96) EP 09770461.3 14.08.2009. Ru
(87) WO2009157814 30.12.2009. 200953
(97) EP 2312025 20.04.2011. 201116 En
(54) METHOD FOR PROCESSING BAST-FIBER MATERIALS
(71) Good Wave Technologies Ltd., Anexartisias & Kyriakou Matsi, 3, Roussos Limassol Tower, 10th Floor, P.C. 3040 Limassol, CY
(72) BUBNOV, Grigoriy Georgievich, ul. Novopeschanaya 13/3-227, Moscow 125252, RU;
ZAKHAROV, Victor Nikolaevich, ul. Marshala Katukova 3-1-240, Moscow 123181, RU;
ZUBOV, Fedor Vladimirovich, ul. P. Savel'evoi 37-1 -15, Tver' 170039, RU;
SEMENOV, Alexandre Viacheslavovich, ul. Planetnaya 4-13, Moscow 125167, RU
(74) Sloboshanin, Sergej, et al, von Füner Ebbinghaus Finck Hano, Mariahilfplatz 3, 81541 München, DE

(51) (8) **EP 2294255 ***
D 03D 1/00
D 03D 11/00
D 03D 11/02
D 03D 15/00
D 03D 15/08
D 06C 7/02
D 03D 15/04
(30) US 15.04.2008. 103565
US 31.07.2008. 183491
(86) PCT/US2009033431 06.02.2009.
(96) EP 09731585.7 06.02.2009. En
(87) WO2009128976 22.10.2009. 200943
(97) EP 2294255 16.03.2011. 201111 En
(54) SHOCK ABSORBING FABRIC STRUCTURES
(71) YKK Corporation of America, One Parkway Center, 1850 Parkway Place, Suite 300, Marietta, GA 30067, US
(72) RUSSELL, Timothy M., 176 Jerri Dale Drive, Anniston, Alabama 36201, US;
JENNINGS, John E., 4421 Cambridge Lane, Anniston, Alabama 36207, US

(74) Phillips & Leigh, 5 Pemberton Row, London EC4A 3BA, GB

(51) (8) **EP 2309059**
D 21H 17/14
D 21H 17/15
D 21H 17/18
D 21H 17/24
D 21H 17/25
D 21H 17/28
D 21H 17/37
D 21H 17/43
D 21H 19/12
D 21H 21/18
D 21H 23/24
D 21H 23/28
D 21H 23/50
C 08B 15/10
C 08L 1/02
C 09D 101/10
(96) EP 09172128.2 02.10.2009. En
(97) EP 2309059 13.04.2011. 201115 En
(54) Method of improving properties of cellulose-based fibrous sheet-formed materials
(71) Organoclick Aktiebolag, Arrheniuslaboratoriet, 106 91 Stockholm, SE
(72) Samec, Joseph, Föllingebacken 25, 163 67, SPZNGA, SE; Enquist, Karl, Näsbydalsvägen 6, 183 31, TÄBY, SE; Cordova, Armando, Katarina Bangata 59 C, 116 42, STOCKHOLM, SE
(74) Kitzler, Michael, IPQ IP Specialists AB, Mailbox 550, 114 11 Stockholm, SE

(51) (8) **EP 2122052 ***
D 21H 19/06
(30) FR 20.11.2006. 0610122
(86) PCT/FR2007001768 25.10.2007.
(96) EP 07866441.4 25.10.2007. Fr
(87) WO2008065263 05.06.2008. 200823
(97) EP 2122052 25.11.2009. 200948 Fr
(54) PAPER FOR AN OPAQUE LABEL IN A DRY AND WET ENVIRONMENT AND THUS OBTAINED LABEL
(71) Papeterie Zuber Rieder, 9 Rue Ernest Zuber, 25320 Boussieres, FR
(72) MARTINET, Marie, NOVAGRAAF TECHNOLOGIES, 25A rue Proudhon, 25000 Besancon, FR; RICHERT, Sylvain, NOVAGRAAF TECHNOLOGIES, 25A rue Proudhon, 25000 Besanson, FR
(74) Bentz, Jean-Paul, Novagraaf Technologies, 16, rue Gambetta, 25000 Besançon, FR

(51) (8) **EP 2204494**
E 01B 9/30
E 01B 9/48
(96) EP 08172979.0 29.12.2008. De
(97) EP 2204494 07.07.2010. 201027 De
(54) Elastic tensioning clamp and rail attachment for same
(71) Vossloh-Werke GmbH, Vosslohstrasse 4, 58791 Werdohl, DE
(72) Bösterling, Winfried, Friedhofsweg 6, 58809 Neuenrade, DE; Esfandiyari, Farhad, Nussbergstr. 18, 58638 iserlohn, DE; Steidl, Michael, 540 North State Str., Apt 4506E, Chicago, IL 60610, US
(74) HOFFMANN EITLE, Patent- und Rechtsanwälte, Arabellastraße 4, 81925 München, DE

(51) (8) **EP 2318587 ***
E 01B 9/30
(30) DE 09.07.2008. 102008032353
(86) PCT/EP2009057804 23.06.2009.
(96) EP 09779888.8 23.06.2009. De
(87) WO2010003817 14.01.2010. 201002
(97) EP 2318587 11.05.2011. 201119 De
(54) ANGULAR GUIDE PLATE AND SYSTEM FOR FIXING A RAIL
(71) Vossloh-Werke GmbH, Vosslohstrasse 4, 58791 Werdohl, DE
(72) BÖSTERLING, Winfried, Friedhofsweg 6, 58809 Neuenrade, DE; RADEMACHER, Lutz, Sachsenstrasse 12g, 58509 Lüdenscheid, DE
(74) Cohausz & Florack, Patent- und Rechtsanwälte, Partnerschaftsgesellschaft, Bleichstraße 14, 40211 Düsseldorf, DE

(51) (8) **EP 2315882 ***
E 02D 5/80
(30) CZ 28.08.2008. 200820271 U
CZ 16.02.2009. 200920873 U
CZ 28.08.2008. 20080522
(86) PCT/CZ2009000106 26.08.2009.
(96) EP 09736793.2 26.08.2009. Cs
(87) WO2010022691 04.03.2010. 201009
(97) EP 2315882 04.05.2011. 201118 En
(54) PILE FOR FOUNDATION
(71) Horanek, Petr, Zitna 533/14b, 32200 Plzen, CZ
(72) Horanek, Petr, Zitna 533/14b, 32200 Plzen, CZ
(74) Langrova, Irena, Skretova 48, 301 00 Plzen, CZ

(51) (8) **EP 2233642**
E 02F 3/36
E 02F 9/22
(30) AT 23.03.2009. 1672009
(96) EP 10450017.8 12.02.2010. De
(97) EP 2233642 29.09.2010. 201039 De
(54) Quick coupler for construction machines
(71) Baumaschinentechnik Gesellschaft m.b.H., St. Josef-Strasse 33, 9500 Villach, AT
(72) Perwein, Michael, Gritschacher Höhe 14/2, 9500 Villach, AT
(74) Beer, Manfred, et al, BEER & PARTNER PATENTANWÄLTE KG, Lindengasse 8, 1070 Wien, AT

(51) (8) **EP 2115228 ***
E 04B 1/26
(30) AT 03.03.2008. 1282008 U
(86) PCT/AT2009000079 26.02.2009.
(96) EP 09718253.9 26.02.2009. De
(87) WO2009108973 11.09.2009. 200937
(97) EP 2115228 11.11.2009. 200946 De
(54) BUILDING
(71) Wolf Modul GmbH, Fischerbühel 9, 4644 Scharnstein, AT
(72) WOLF, Johann, Schönenbühl 6, CH-9050 Appenzell, CH

(74) Beer, Manfred, et al, BEER & PARTNER PATENTANWÄLTE KG, Lindengasse 8, 1070 Wien, AT

(51) (8) **EP 1892346**
E 04B 1/343
(30) DE 14.08.2006. 202006012517 U
(96) EP 07015888.6 13.08.2007. De
(97) EP 1892346 27.02.2008. 200809 De
(54) Dismantleable room module of wall panels interconnected by profiles
(71) Narr Isoliersysteme GmbH, Ohnrastrasse 23, 72336 Balingen, DE
(72) Narr, Uwe, Stauffenbergerstrasse 8, 72336 Balingen, DE; Häusler, Wolfgang, Escher Strasse 13, 56729 Kirchwald, DE
(74) Paul, Dieter-Alfred, et al, Paul & Albrecht, Patentanwaltssozietät, Hellersbergstrasse 18, 41460 Neuss, DE

(51) (8) **EP 2297411** *
E 04B 1/68
E 06B 1/62
(30) DE 13.05.2008. 102008023375
DE 10.12.2008. 102008055505
DE 13.03.2009. 102009013107
(86) PCT/EP2009054655 20.04.2009.
(96) EP 09745644.6 20.04.2009. De
(87) WO2009138311 19.11.2009. 200947
(97) EP 2297411 23.03.2011. 201112 De
(54) FOAM SEALING STRIP
(71) Tremco illbruck Produktion GmbH, Werner-Haepp-Strasse 1, 92439 Bodenwöhr, DE
(72) WÖRMANN, Frank, Kampstraße 2, 59192 Bergkamen, DE;
KOMMA, Markus, Brunnackerweg 21, 93128 Regenstauf, DE;
KÖPPL, Alfred, Eichental 1, 92431 Neunburg v.W., DE;
NAUCK, Helmar, Köpenzeile 32, 12557 Berlin, DE;
BIRKELBACH, Jörg, Heddinghofener Strasse 13, 51399 Burscheid, DE
(74) Müller, Enno, et al, RIEDER & PARTNER, Patentanwälte - Rechtsanwalt, Corneliusstrasse 45, 42329 Wuppertal, DE

(51) (8) **EP 1990478**
E 04D 3/35
B 32B 5/22
B 32B 5/30
B 32B 7/04
B 32B 7/12
B 32B 11/04
B 32B 11/12
(96) EP 07388031.2 07.05.2007. En
(97) EP 1990478 12.11.2008. 200846 En
(54) A building roof structure
(71) ICOPAL A/S, Mileparken 38, DK-2730 Herlev, DK
(72) Zandvoort, Frits, Smitslaan 6, 9628 AH Siddenburen, NL; Jensen, Poul Henning, Herredsvej 48, 2820 Gentofte, NL
(74) Sundien, Thomas, et al, Zacco Denmark A/S, Hans Bekkevolds Allé 7, 2900 Hellerup, DK

(51) (8) **EP 2304124** *
E 04D 3/365
(30) DE 09.06.2008. 202008007662 U
(86) PCT/EP2008005539 08.07.2008.
(96) EP 08773908.2 08.07.2008. De
(87) WO2009149736 17.12.2009. 200951
(97) EP 2304124 06.04.2011. 201114 De
(54) ROOF STRUCTURE
(71) ARCELORMITTAL Construction Deutschland GmbH, Münchener Str. 2, 06796 Behna, DE
(72) KÖHLER, Matthias, Probsteistrasse 6, 06682 Teuchern, DE
(74) Lasch, Hartmut, LICHTI - Patentanwälte, Postfach 41 07 60, 76207 Karlsruhe, DE

(51) (8) **EP 2236691**
E 04D 13/00
G 01M 3/16
(30) AT 12.03.2009. 4012009
EP 04.03.2010. 10450033
(96) EP 10450038.4 11.03.2010. De
(97) EP 2236691 06.10.2010. 201040 De
(54) Assembly and method for checking roofs
(71) Fleischmann & Petschnig, Dachdeckungs-Gesellschaft m.b.H., Rosentalerstrasse 87, 9020 Klagenfurt, AT
(72) Petschnig, Otmar, Rosentalerstrasse 87, 9023 Klagenfurt, AT
(74) Hehenberger, Reinhard, et al, BEER & PARTNER PATENTANWÄLTE KG, Lindengasse 8, 1070 Wien, AT

(51) (8) **EP 2224076**
E 04H 3/12
(96) EP 09450045.1 27.02.2009. De
(97) EP 2224076 01.09.2010. 201035 De
(54) Stand
(71) Altbart, Ana, Kapellengasse 5/3/8, 2514 Wienersdorf, AT
(72) Ortner, Wolfgang, Lustkandlstrasse 2, 3061 Ollersbach, AT
(74) Patentanwälte, Barger, Piso & Partner, Mahlerstrasse 9, Postfach 96, 1015 Wien, AT

(51) (8) **EP 2294270** *
E 04H 12/14
E 04G 23/02
(30) HU 04.02.2008. 0800070
(86) PCT/HU2009000013 04.02.2009.
(96) EP 09708210.1 04.02.2009. En
(87) WO2009098528 13.08.2009. 200933
(97) EP 2294270 16.03.2011. 201111 En
(54) METHODS FOR REINFORCING EXISTING LATTICE FRAME STRUCTURES HAVING HOLLOW STEEL PRIMARY ELEMENTS, PARTICULARLY STEEL TOWERS WITH TUBULAR LEGS
(71) Silber, Meir, Szent Istvan u. 20., 1029 Budapest, HU
(72) Silber, Meir, Szent Istvan u. 20., 1029 Budapest, HU
(74) Varga, Tamas Péter, Bertalan Lajos u. 20. fsz. 3/a., 1111 Budapest, HU

(51) (8) **EP 1953311**
E 05B 3/06
E 05B 63/04
E 05B 15/04
(30) DE 04.01.2007. 202007000380 U
(96) EP 07022753.3 23.11.2007. De
(97) EP 1953311 06.08.2008. 200832 De
(54) Return spring arrangement for door or window fittings and door or window fittings

(71) HOPPE AG, Am Plausdorfer Tor 13, D-35260 Stadtallendorf, DE
(72) Reitz, Reinhold, Brunnenweg 15, 34628 Willingshausen, DE;
Knack, Anja, Hauptstrasse 13A, 35274 Kirchhain, DE
(74) Buchhold, Jürgen, et al, Patentanwälte Olbricht & Buchhold, Am Weinberg 15, 35096 Weimar/Lahn, DE

(51) (8) **EP 2310598 ***
E 05B 27/02
E 05B 27/06
E 05B 19/06
(30) AT 12.08.2008. 12562008
(86) PCT/EP2009005786 10.08.2009.
(96) EP 09777778.3 10.08.2009. De
(87) WO2010017941 18.02.2010. 201007
(97) EP 2310598 20.04.2011. 201116 De
(54) CYLINDER LOCK WITH CYLINDER HOUSING AND FLAT KEY FOR A CYLINDER LOCK
(71) EVVA Sicherheitstechnologie GmbH, Wienerbergstrasse 59-65, 1120 Wien, AT
(72) BAUMHAUER, Walter, Gablenzgasse 24-26a, A-1160 Wien, AT
(74) Puchberger, Peter, Puchberger, Berger & Partner, Reichsratsstrasse 13, 1010 Wien, AT

(51) (8) **EP 2313586 ***
E 05B 73/00
(30) IL 30.06.2008. 19253008
(86) PCT/IL2009000637 28.06.2009.
(96) EP 09773040.2 28.06.2009. En
(87) WO2010001385 07.01.2010. 201001
(97) EP 2313586 27.04.2011. 201117 En
(54) ANTI-THEFT DEVICES FOR PORTABLE OBJECTS SUCH AS LAPTOPS
(71) Avganim, Mair, Moshav Gealiya 156, 76885 M. P. Nachal Sorek, IL
(72) Avganim, Mair, Moshav Gealiya 156, 76885 M. P. Nachal Sorek, IL
(74) Boden, Keith McMurray, Fry Heath & Spence LLP, The Gables, Massetts Road, Horley, Surrey RH6 7DQ, GB

(51) (8) **EP 2304146 ***
E 05D 7/00
E 05D 15/30
E 05D 15/52
(30) DE 06.06.2008. 102008027153
(86) PCT/EP2009003468 15.05.2009.
(96) EP 09757165.7 15.05.2009. De
(87) WO2009146782 10.12.2009. 200950
(97) EP 2304146 06.04.2011. 201114 De
(54) HINGED OPENING DEVICE FOR A WINDOW, A DOOR, OR THE LIKE
(71) ROTO FRANK AG, Stuttgarter Strasse 145-149, 70771 Leinfelden-Echterdingen, DE
(72) STAPF, Peter, Schafgartenstrasse 6, 70771 Leinfelden-Echterdingen, DE;
BEYER, Holger, Bruno-Frank-Strasse 51, 70619 Stuttgart, DE
(74) Grosse, Rainer, et al, Gleiss Grosse Schrell & Partner, Patentanwälte Rechtsanwälte, Leitzstrasse 45, 70469 Stuttgart, DE

(51) (8) **EP 2241709**
E 05F 15/14
E 05F 17/00
(30) ES 16.04.2009. 200900999
(96) EP 10380056.1 15.04.2010. Es
(97) EP 2241709 20.10.2010. 201042 En
(54) Simultaneous displacement device for sliding doors
(71) KLEIN IBÉRICA, S.A., Polígono Industrial Can Cuyás, Ctra. N-150 a Sabadell, Km.1, Edificio Klein, 08110 Montcada i Reixac (Barcelona), ES
(72) Tarrega Lloret, Miguel Angel, Nena Casas, 20-22, 08017 Barcelona, ES
(74) Carvajal y Urquijo, Isabel, et al, Clarke, Modet & Co., c/ Goya, 11, 28001 Madrid, ES

(51) (8) **EP 2304152 ***
E 06B 1/62
(30) DE 28.04.2008. 102008021215
DE 24.05.2008. 102008025019
(86) PCT/EP2009053599 26.03.2009.
(96) EP 09737951.5 26.03.2009. De
(87) WO2009132907 05.11.2009. 200945
(97) EP 2304152 06.04.2011. 201114 De
(54) WINDOW FRAME, METHOD FOR FITTING A WINDOW, FOAM SEALING STRIP, METHOD FOR SEALING A WINDOW FRAME AND CONTAINER COMPRISING A FOAM SEALING STRIP
(71) Tremco illbruck Produktion GmbH, Werner-Haepp-Strasse 1, 92439 Bodenwöhr, DE
(72) NAUCK, Helmar, Köpenzeile 32, 12557 Berlin, DE;
KOMMA, Markus, Brunnackerweg 21, 93128 Regenstauf, DE;
WÖRMANN, Frank, Kampstraße 2, 59192 Bergkamen, DE
(74) Müller, Enno, RIEDER & PARTNER, Patentanwälte - Rechtsanwalt, Corneliusstrasse 45, 42329 Wuppertal, DE

(51) (8) **EP 2053190**
E 06B 3/46
E 05F 5/00
(30) ES 25.10.2007. 200702807
(96) EP 08380297.5 20.10.2008. Es
(97) EP 2053190 29.04.2009. 200918 En
(54) Regulation mechanism for sliding doors
(71) KLEIN IBÉRICA, S.A., Polígono Industrial Can Cuyás, Ctra. N-150 a Sabadell, Km.1, Edificio Klein, 08110 Montcada i Reixac (Barcelona), ES
(72) Tarrega Lloret, Miguel Angel, c/ Nena Casas 20-22, 08017 Barcelona, ES
(74) Carvajal y Urquijo, Isabel, et al, Clarke, Modet & Co., c/ Goya, 11, 28001 Madrid, ES

(51) (8) **EP 2261453**
E 06B 7/215
(96) EP 09007685.2 10.06.2009. De
(97) EP 2261453 15.12.2010. 201050 De
(54) Window or door
(71) Rolf, Josef, Zum Steiner Stück 6, 53809 Ruppichteroth, DE
(72) Rolf, Josef, Zum Steiner Stück 6, 53809 Ruppichteroth, DE
(74) Müller-Gerbes Wagner Albiger, Patentanwälte, Friedrich-Breuer-Strasse 72-78, 53225 Bonn, DE

(51) (8) **EP 2213827**
E 06B 9/382
E 06B 9/388
E 06B 9/323
(96) EP 09151819.1 30.01.2009. En
(97) EP 2213827 04.08.2010. 201031 En
(54) A readjustable Venetian blind, a method of configuring the blind and a method of suspending the blind
(71) Stila A/S, Hassellunden 3, 2765 Smorum, DK
(72) Stilling-Petersen, Ole, Smørum Bygade 28, 2765 Smørum, DK;
SØndergaard, Anders, Abrikosvej 28, 4700 Næstved, DK;
Møller-Jensen, Peter, Svenstrupvej 6, 2970 Hørsholm, DK
(74) Holme Patent A/S, Vesterbrogade 20, 1620 Copenhagen V, DK

(51) (8) **EP 2310623 ***
E 21B 33/124
E 21B 43/25
(30) US 06.06.2008. 59429 P
(86) PCT/CA2009000817 08.06.2009.
(96) EP 09757025.3 08.06.2009. En
(87) WO2009146563 10.12.2009. 200950
(97) EP 2310623 20.04.2011. 201116 En
(54) WELLBORE FLUID TREATMENT PROCESS AND INSTALLATION
(71) Packers Plus Energy Services Inc., 900, 407 - 2nd Street SW, Calgary, Alberta T2P 2Y3, CA
(72) THEMIG, Daniel Jon, 256 Woodhaven Place SW, Calgary, Alberta T2W 5P9, CA
(74) Perkins, Sarah, et al, Stevens Hewlett & Perkins, 1 Pemberton Row, GB-London EC4A 3BG, GB

(51) (8) **EP 2297427 ***
E 21B 33/14
E 21B 17/00
E 21B 33/124
E 21B 34/14
(30) US 30.05.2008. 57402
(86) PCT/CA2009000748 01.06.2009.
(96) EP 09753389.7 01.06.2009. En
(87) WO2009143628 03.12.2009. 200949
(97) EP 2297427 23.03.2011. 201112 En
(54) CEMENTING SUB FOR ANNULUS CEMENTING
(71) Packers Plus Energy Services Inc., 900, 407 - 2nd Street SW, Calgary, Alberta T2P 2Y3, CA
(72) THEMIG, Daniel Jon, 256 Woodhaven Place SW, Calgary, Alberta T2W 5P9, CA
(74) Perkins, Sarah, et al, Stevens Hewlett & Perkins, 1, Pemberton Row, London, EC4A 3BG, GB

(51) (8) **EP 2294279 ***
E 21B 34/14
E 21B 33/126
E 21B 34/10
(30) US 29.04.2008. 48797
US 16.03.2009. 405185
(86) PCT/CA2009000599 29.04.2009.
(96) EP 09737604.0 29.04.2009. En
(87) WO2009132462 05.11.2009. 200945
(97) EP 2294279 16.03.2011. 201111 En
(54) DOWNHOLE SUB WITH HYDRAULICALLY ACTUABLE SLEEVE VALVE
(71) Packers Plus Energy Services Inc., 900, 407 - 2nd Street SW, Calgary, Alberta T2P 2Y3, CA
(72) THEMIG, Daniel Jon, 256 Woodhaven Place SW, Calgaray, Alberta T2W5P9, CA;
TRAHAN, Kevin O., 31 Silvermont Drive, The Woodlands, Texas 77382, US;
DESRANLEAU, Christopher Denis, 307 Ridgeland Crescent, Sherwood Park, Alberta T8A 3A5, CA
(74) Perkins, Sarah, et al, Stevens Hewlett & Perkins, 1, Pemberton Row, London, EC4A 3BG, GB

(51) (8) **EP 2318657 ***
E 21C 45/00
(30) GB 02.07.2008. 0812119
(86) PCT/EP2008005490 04.07.2008.
(96) EP 08784628.3 04.07.2008. En
(87) WO2010000289 07.01.2010. 201001
(97) EP 2318657 11.05.2011. 201119 En
(54) A METHOD OF MINING AND PROCESSING SEABED SEDIMENT
(71) MARINE RESOURCES EXPLORATION INTERNATIONAL B.V., Klaaskampen 24, 1251 KP Laren, NL
(72) PATRICIU, Dan, costache, 33 Herastrau Street District 1, Bucharest, RO
(74) Draper, Martyn John, Boult Wade Tennant, Verulam Gardens, 70 Gray's Inn Road, GB-London WC1X 8BT, GB

(51) (8) **EP 2304177 ***
E 21D 9/06
E 21D 9/08
(30) US 30.05.2008. 57777
(86) PCT/US2009045674 29.05.2009.
(96) EP 09767421.2 29.05.2009. En
(87) WO2009155110 23.12.2009. 200952
(97) EP 2304177 06.04.2011. 201114 En
(54) APPARATUS AND METHOD FOR MONITORING TUNNEL BORING EFFICIENCY
(71) The Robbins Company, 5866 South 194th Street, Kent, WA 98032, US
(72) LINDBERGH, Leif, R., 5033 38th Avenue Northeast, Seattle, WA 98105, US;
SHANAHAN, Aaron, J., 7712 17th Avenue Southwest, Seattle, WA 98106, US;
CAHOON, Ian, R., 27523 139th Court Southeast, Kent, WA 98042, US;
ROBBINS, Richard, J., 154 Lake Washington Boulevard East, Seattle, WA 98112, US;
MOORE, James, C., 1570 Pemberton Drive, Columbus, OH 43221, US;
BROWN, Brent, R., 10243 Valley Forge Lane North, Maple Grove, MN 55369, US;
REILLY, Timothy, J., 1718 Markham Court, Kelowna, British Columbia V1V 2W1, CA
(74) Rupp, Christian, Mitscherlich & Partner, Patent- und Rechtsanwälte, Sonnenstrasse 33, 80331 München, DE

(51) (8) **EP 2300699 ***
F 02B 33/30
(30) US 17.04.2009. 170452 P
(86) PCT/US2010029304 31.03.2010.
(96) EP 10764849.5 31.03.2010. En
(87) WO2010120499 21.10.2010. 201042
(97) EP 2300699 30.03.2011. 201113 En

(54) PART-LOAD CONTROL IN A SPLIT-CYCLE ENGINE
(71) Scuderi Group, Llc, 1111 Elm Street, Suite No. 33, West Springfield, MA 01089, US
(72) SCUDERI, Stephen, 1023 Shaker Road, Westfield, MA 01085, US
(74) Harding, Andrew Philip, Forrester & Boehmert, Pettenkoferstrasse 20-22, 80336 München, DE

(51) (8) **EP 2313634** *
F 02G 5/00
(30) US 03.07.2008. 77880 P
(86) PCT/US2009049585 02.07.2009.
(96) EP 09774545.9 02.07.2009. En
(87) WO2010003096 07.01.2010. 201001
(97) EP 2313634 27.04.2011. 201117 En
(54) SYSTEM AND METHOD FOR USING BOARD PLANT FLUE GASES IN THE PRODUCTION OF SYNGAS
(71) Certainteed Gypsum, Inc., 4300 W. Cypress Street, Suite 500, Tampa, FL 33607, US
(72) COLLEGE, John, W., 963 Highview Road, Pittsburgh, PA 15234, US
(74) Chapman, Helga Claire, Chapman Molony, 20 Staple Gardens, Winchester SO23 8SR, GB

(51) (8) **EP 2224123**
F 02M 51/00
F 02M 51/06
F 02M 61/16
(96) EP 09153605.2 25.02.2009. En
(97) EP 2224123 01.09.2010. 201035 En
(54) Piezoelectric actuator
(71) Delphi Technologies Holding S.à.r.l., Avenue de Luxembourg, 4940 Bascharage, LU
(72) Koppe, Alain, 26 rue Principale, F-57480, Haute-Kontz, FR;
Schlosser, Davy, 110 Cité Bellevue, 57700 Hayange, FR
(74) Gregory, John David Charles, Delphi Diesel Systems, Patent Department, Courteney Road, Gillingham, Kent ME8 0RU, GB

(51) (8) **EP 2204574**
F 02M 55/02
F 02M 63/02
(96) EP 08172800.8 23.12.2008. En
(97) EP 2204574 07.07.2010. 201027 En
(54) Fuel injection system
(71) Delphi Technologies Holding S.à.r.l., Avenue de Luxembourg, 4940 Bascharage, LU
(72) Bonneau, David, 19 quai du Foix, 41000, Blois, FR; Trenado, Guillaume, 8, rue da la Croix Verte, 41120 Les Montils, FR
(74) Gregory, John David Charles, et al, Delphi Diesel Systems, Patent Department, Courteney Road, Gillingham, Kent ME8 0RU, GB

(51) (8) **EP 2297451** *
F 03B 3/04
F 03B 17/06
(30) DE 10.07.2008. 102008032411
(86) PCT/EP2009004803 02.07.2009.
(96) EP 09776934.3 02.07.2009. De
(87) WO2010003591 14.01.2010. 201002
(97) EP 2297451 23.03.2011. 201112 De
(54) FLOW CONVERTER
(71) SIGNO-Erfinderverein Sachsen e.V., Karl-Heine-Strasse 99, 04229 Leipzig, DE
(72) SEYFARTH, Gerold, Zschochersche Strasse 87, 04229 Leipzig, DE;
HÖFGEN, Siegfried, Ohorner Strasse 25, 01920 Steina, DE;
LANGLOTZ, Holger, Lindenweg 1, 99867 Gotha, DE
(74) Müller, Volkmar, Manfred Köhler und Kollegen, Patent- und Rechtsanwälte, Kohlgartenstrasse 33-35, 04315 Leipzig, DE

(51) (8) **WO 2010043987**
F 03B 13/24
F 03B 13/14
F 03B 13/16
F 03B 13/18
(30) IT 14.10.2008. BS20080180
(86) PCT/IB2009053490 07.08.2009.
(96) WO 09786864.0 07.08.2009. It
(87) WO2010043987 22.04.2010. 201016
(97) WO 2010043987 22.04.2010. 201016 En
(54) DEVICE FOR GENERATING ELECTRIC ENERGY FROM A RENEWABLE SOURCE
(71) Tecnomac S.R.L., Via Pablo Neruda 69/71, 25020 Flero, Brescia, IT
(72) LAMA, Arturo, Via Donatori di Sangue 1, I-25040 Nigoline di Corte Franca, Brescia, IT
(74) Chimini, Francesco, Jacobacci & Partners S.p.A., Piazza della Vittoria 11, 25121 Brescia, IT

(51) (8) **EP 2253857**
F 16B 19/10
B 60D 1/60
(30) DE 19.05.2009. 202009004833 U
(96) EP 10163184.4 18.05.2010. De
(97) EP 2253857 24.11.2010. 201047 De
(54) Catch element
(71) Ebner, Johann, Fährweg 2, 89287 Bellenberg, DE
(72) Ebner, Johann, Fährweg 2, 89287 Bellenberg, DE
(74) Hutzelmann, Gerhard, Patentanwaltskanzlei Hutzelmann, Schloss Osterberg, 89296 Osterberg, DE

(51) (8) **EP 2304253** *
F 16C 11/06
F 16C 11/00
(30) US 25.07.2008. 83834 P
(86) PCT/US2009051866 27.07.2009.
(96) EP 09801120.8 27.07.2009. En
(87) WO2010012001 28.01.2010. 201004
(97) EP 2304253 06.04.2011. 201114 En
(54) HIGH-TEMPERATURE BEARING ASSEMBLIES AND METHODS OF MAKING THE SAME
(71) Cablecraft Motion Controls LLC, 2110 Summit Street, New Haven, IN 46774, US
(72) KAUFMAN, Christopher, Alan, 8305 Greenwich Court, Fort Wayne, IN 46835, US;
GRABNER, David, Frederick, 5275 North 500 East, Roanoke, IN 46783, US
(74) Stainthorpe, Vanessa Juliet, Harrison Goddard Foote, Fountain Precinct, Balm Green, Sheffield South Yorkshire, S1 2JA, GB

(51) (8) **EP 2315965** *
F 16D 65/06
(30) IT 21.07.2008. MO20080199
(86) PCT/IB2009053150 21.07.2009.
(96) EP 09800141.5 21.07.2009. It
(87) WO2010010508 28.01.2010. 201004
(97) EP 2315965 04.05.2011. 201118 En
(54) BLOCK FOR BRAKE WITH RELIEF GROOVES
(71) Bellicoso, Laura, Piazza De Martino 42, 80036 Palma Campania (NA), IT
(72) Bellicoso, Laura, Piazza De Martino 42, 80036 Palma Campania (NA), IT
(74) Crugnola, Pietro, et al, Luppi Crugnola & Partners S.r.l., Viale Corassori 54, 41124 Modena, IT

(51) (8) **WO 2010015919**
F 16G 3/10
F 16G 3/08
(30) IT 07.08.2008. BO20080514
(86) PCT/IB2009006468 05.08.2009.
(96) WO 09804608.9 05.08.2009. It
(87) WO2010015919 11.02.2010. 201006
(97) WO 2010015919 11.02.2010. 201006 En
(54) BELT PIECE FOR THE TRANSPORT OF ARTICLES AND/OR FOR POWER TRANSMISSIONS AND METHOD FOR OBTAINING A CLOSED LOOPED BELT STARTING FROM SAID BELT PIECE
(71) Vision Tech S.r.l., Via Verde 2/A, Z.I. Stelloni, 40012 Calderara di Reno (Bologna), IT
(72) VINCENZI, Maurizio, Via Benzi 14, I-41010 Cognento (Modena), IT;
NASCIMBENI, Massimo, c/o VISION TECH S.R.L., Via Verde 2/A Z.I. Stelloni, I-40012 Calderara di Reno (Bologna), IT
(74) Dall'Olio, Giancarlo, et al, Invention S.r.l., Via delle Armi 1, 40137 Bologna, IT

(51) (8) **EP 2321552** *
F 16G 3/10
F 16G 3/08
(30) IT 07.08.2008. BO20080514
(86) PCT/IB2009006468 05.08.2009.
(96) EP 09804608.9 05.08.2009. It
(87) WO2010015919 11.02.2010. 201006
(97) EP 2321552 18.05.2011. 201120 En
(54) BELT PIECE FOR THE TRANSPORT OF ARTICLES AND/OR FOR POWER TRANSMISSIONS AND METHOD FOR OBTAINING A CLOSED LOOPED BELT STARTING FROM SAID BELT PIECE
(71) Vision Tech S.r.l., Via Verde 2/A, Z.I. Stelloni, 40012 Calderara di Reno (Bologna), IT
(72) VINCENZI, Maurizio, Via Benzi 14, I-41010 Cognento (Modena), IT;
NASCIMBENI, Massimo, c/o VISION TECH S.R.L., Via Verde 2/A Z.I. Stelloni, I-40012 Calderara di Reno (Bologna), IT
(74) Dall'Olio, Giancarlo, et al, Invention S.r.l., Via delle Armi 1, 40137 Bologna, IT

(51) (8) **EP 2213910**
F 16H 61/02
B 60W 10/10
F 16H 47/02
F 16H 59/44
F 16H 59/48
F 16H 59/46
(30) DE 29.01.2009. 102009006468
(96) EP 10000949.7 29.01.2010. De
(97) EP 2213910 04.08.2010. 201031 De
(54) Method and device for changing the gears of a hydrostatically driven multiple gear gearbox
(71) Robert Bosch GmbH, Postfach 30 02 20, 70442 Stuttgart, DE
(72) Riggenmann, Frank, Gartenweg 5, 89284 Pfaffenhofen, DE; Miller, Matthias, Kemnater Weg 16, 88416 Steinhausen, DE; Brand, Michael, Albecker Steige 86, 89075 Ulm, DE
(74) Beder, Jens, Mitscherlich & Partner, Patent- und Rechtsanwälte, Postfach 33 06 09, 80066 München, DE

(51) (8) **EP 2300740** *
F 16J 15/08
F 16J 15/28
F 16J 15/32
(30) PL 18.06.2008. 38545708
(86) PCT/PL2009000064 08.06.2009.
(96) EP 09766907.1 08.06.2009. En
(87) WO2009154490 23.12.2009. 200952
(97) EP 2300740 30.03.2011. 201113 En
(54) SEALING ARRANGEMENT FOR CYLINDRICAL SURFACES AND A SEAL TO BE USED IN SUCH SEALING ARRANGEMENTS
(71) Radowski, Piotr Mitr, Ul. Swierkowa 43/4, 81-526 Gdynia, PL
(72) GUMULA, Stanislaw, ul. Krzyszkowiaka 8, PL-31-020 Wieliczka, PL;
DORUCH, Henryk, ul. Ks. Turka 8/54, PL-30-717 Krakow, PL;
RADOWSKI, Pawel, ul. Swierkowa 43/9, PL-81-526 Gdynia, PL;
JAROS, Ryszard, ul. Wycz lkowskiego 71, PL-80-147 Gdansk, PL
(74) Pomianek, Grazyna, Kancelaria Patentowo-Prawna, Pomianek Sp.j., Ul. Subislawa 23 C lok. 7, 80-354 Gdansk, PL

(51) (8) **EP 2310721** *
F 16J 15/10
(30) GB 16.07.2008. 0812998
GB 05.05.2009. 0907667
(86) PCT/GB2009050874 16.07.2009.
(96) EP 09785350.1 16.07.2009. En
(87) WO2010007439 21.01.2010. 201003
(97) EP 2310721 20.04.2011. 201116 En
(54) SEAL
(71) James Walker&Co. Ltd, Lion House, Oriental Road, Woking, Surrey GU22 8AP, GB
(72) WARREN, Peter, John, Lion House, Oriental Road, Woking, Surrey GU22 8AP, GB;
WINTERBOTTOM, Stephen, Lion House, Oriental Road, Woking, Surrey GU22 8AP, GB
(74) Duckett, Anthony Joseph, Mathys & Squire LLP, 120 Holborn, London, EC1N 2SQ, GB

(51) (8) **EP 2278198**
F 16J 15/32
B 29C 43/18
(30) IT 26.05.2005. MO20050130
(96) EP 10180936.6 24.05.2006. En
(97) EP 2278198 26.01.2011. 201104 En
(54) Seal and corresponding manufacturing method
(71) Tenute S.r.l., Via Settembrini Luigi 1, 20124 Milano, IT
(72) Ravanelli, Raffaello, Via Raffaello Sanzio 2, 20040, Cambiago (MI), IT;
Bertini, Mario, Via Lombardia 1, 20060, Bellinzago Lombardo (MI), IT
(74) Cicconetti, Andrea, et al, Luppi Crugnola & Partners S.r.L., Viale Corassori, 54, 41124 Modena, IT

(51) (8) **EP 2318739** *
F 16J 15/32
(30) IT 21.07.2008. MO20080196
(86) PCT/IB2009053141 20.07.2009.
(96) EP 09799148.3 20.07.2009. It
(87) WO2010010507 28.01.2010. 201004
(97) EP 2318739 11.05.2011. 201119 En
(54) SEAL AND CORRESPONDING MANUFACTURING METHOD
(71) Tenute S.r.l., Via Settembrini Luigi 1, 20124 Milano, IT
(72) BERTINI, Mario, Via Lombardia 1, I-20060 Bellinzago Lombardo (MI), IT;
RAVANELLI, Raffaello, Viale delle Industrie 77, I-20040 Cambiago (MI), IT
(74) Cicconetti, Andrea, et al, Luppi Crugnola & Partners S.r.l., Viale Corassori, 54, 41100 Modena, IT

(51) (8) **EP 2310724** *
F 16J 15/34
(30) IT 31.07.2008. MC20080143
(86) PCT/EP2008066255 26.11.2008.
(96) EP 08875380.1 26.11.2008. En
(87) WO2010012317 04.02.2010. 201005
(97) EP 2310724 20.04.2011. 201116 En
(54) FLUID MIXER WITH ROTARY SHAFTS AND RELATIVE SEAL UNIT.
(71) Meccanotecnica Umbra S.p.A., Via Giovanni Agnelli 7, 06042 Campello sul Clitunno (PG), IT
(72) D'ORAZIO, NUNZIO, 18 Via Roma, Località Bovara, I-06039 Trevi (PG), IT
(74) Baldi, Claudio, Ing. Claudio Baldi S.r.l., Viale Cavallotti, 13, 60035 Jesi (Ancona), IT

(51) (8) **EP 2251573**
F 16K 1/22
(30) DE 14.05.2009. 202009006989 U
(96) EP 10162735.4 12.05.2010. De
(97) EP 2251573 17.11.2010. 201046 De
(54) Isolation or regulating fitting
(71) CTV-Armaturen GmbH, Konrad-Zuse-Strasse 5, 54552 Nerdlen, DE
(72) Lanser, Axel, Schwalbenweg 11, 54558 Gillenfeld, DE
(74) Zenz, Patent- und Rechtsanwälte, Rüttenscheider Strasse 2, 45128 Essen, DE

(51) (8) **EP 2048418**
F 16K 31/06
F 16K 31/56
F 16K 17/38
A 62C 35/68
(30) IT 11.10.2007. BS20070155
(96) EP 07425775.9 06.12.2007. It
(97) EP 2048418 15.04.2009. 200916 En
(54) Safety electrovalve
(71) Pietro Fiorentini S.p.A., Via E. Fermi 8/10, 36057 Arcugnano (VI), IT
(72) Ravazzolo, Romano, Via Crocifissa di Rosa, 15, 25128 Brescia, IT
(74) Pulieri, Gianluca Antonio, et al, Jacobacci & Partners S.p.A., Piazza della Vittoria, 11, 25122 Brescia, IT

(51) (8) **EP 2233807**
F 16K 31/08
F 16K 15/02
(96) EP 09155918.7 23.03.2009. En
(97) EP 2233807 29.09.2010. 201039 En
(54) Check valve and pump with the same
(71) Walrus Pump Co., Ltd., 83-14, Da Pian Tou, Ho Chuoh Village, San Chi, Taipei Hsien, TW
(72) Huang, Shou-Hsiung, 83-14, Da Pian Tou, Ho Chouh Village, San Chi, Taipei Hsien, TW
(74) Guy, Elizabeth, EIP, Fairfax House, 15 Fulwood Place, London WC1V 6HU, GB

(51) (8) **EP 1783413**
F 16L 25/00
F 16L 33/26
(30) DE 03.11.2005. 102005052489
(96) EP 06022687.5 31.10.2006. De
(97) EP 1783413 09.05.2007. 200719 De
(54) Arrangement for connecting the ends of a metal pipe with helical corrugations with a connecting piece
(71) BRUGG Rohr AG, Holding, Klosterzelgstrasse 28, 5200 Brugg, CH
(72) Nielinger, Helga, DIPL.-ING., Max Planck Strasse 106, 31535 Neustadt, DE
(74) Scheffler, Jörg, Patentanwaltskanzlei Scheffler, Arnswaldtstraße 31, 30159 Hannover, DE

(51) (8) **EP 2045504**
F 16L 41/02
F 16L 47/32
H 02G 15/013
H 02G 15/113
G 02B 6/44
(30) NL 04.10.2007. 1034471
(96) EP 08165927.8 06.10.2008. Nl
(97) EP 2045504 08.04.2009. 200915 En
(54) connecting piece for protective cable pipes
(71) Wavin B.V., Stationsplein 3, 8011 CW Zwolle, NL
(72) Huisjes, Alwin, 5, E.H. Meyerinkstraat, 7695 SP Bruchterveld, NL;
Mulder-Grootoonk, Jeannette, 30, Anerveenseweg, 7784 DD Ane, NL;
Poppe, Richard, 16, Schapendijk, 7608 LV Almelo, NL;
Vos, Bastiaan, 17, Loire, 9406 VA Assen, NL;
Van Dijk, Berend Jan, 138, Schuineslootweg, 7777ST Schuinesloot, NL

(74) van Bouwelen, Franciscus Maria, et al, Hoffmann - Eitle, Patent- und Rechtsanwälte, Arabellastraße 4, 81925 München, DE

(51) (8) **EP 2307783 ***
F 16L 58/04
(30) GB 02.07.2008. 0812071
(86) PCT/GB2009050633 08.06.2009.
(96) EP 09772824.0 08.06.2009. En
(87) WO2010001144 07.01.2010. 201001
(97) EP 2307783 13.04.2011. 201115 En
(54) PIPE COATING
(71) Pipeline Technique Limited, The Welding Centre, Smithy Road, Rothienorman, Aberdeenshire AB51 8ZE, GB
(72) HUTT, Graham, 8 Chemin des Chataigniers, F-34320 Nizas, FR
(74) Crosby, Wendy Agnes, Murgitroyd & Company, Scotland House, 165-169 Scotland Street, Glasgow G5 8PL, GB

(51) (8) **EP 2321569 ***
F 21L 4/00
(30) US 08.08.2008. 188233
(86) PCT/US2009053239 08.08.2009.
(96) EP 09805650.0 08.08.2009. En
(87) WO2010017539 11.02.2010. 201006
(97) EP 2321569 18.05.2011. 201120 En
(54) PORTABLE LIGHTING DEVICES
(71) MAG Instrument, Inc., 2001 South Hellmann Avenue, Ontario, CA 91761, US
(72) MAGLICA, Anthony, 2001 South Hellman Avenue, Ontario, CA 91761, US;
WEST, Stacey, H., 40419 Amesbury Lane, Temecula, CA 92591, US
(74) Zeller, Andreas, Jones Day, Prinzregentenstraße 11, 80538 München, DE

(51) (8) **EP 2230445**
F 21S 8/08
F 21V 7/09
(96) EP 09290191.7 17.03.2009. En
(97) EP 2230445 22.09.2010. 201038 En
(54) Lighting unit and luminaire for lighting pedestrian crossings
(71) Thorn Europhane S.A., Route de la Paix, BP 504, 27705 Les Andelys Cedex, FR
(72) Rami, Jean-Paul, 24 rue de la Grosse Borne, 27200 Vernon, FR;
Rocard, Florian, 13 avenue Victor Hugo, Appartement 22, 27700 Les Andelys, FR
(74) Thun, Clemens, Mitscherlich & Partner, Postfach 33 06 09, 80066 München, DE

(51) (8) **EP 2297517 ***
F 22B 21/00
F 22B 37/04
(30) DE 02.07.2008. 102008030953
DE 17.09.2008. 102008047784
(86) PCT/EP2009002888 21.04.2009.
(96) EP 09772046.0 21.04.2009. De
(87) WO2010000346 07.01.2010. 201001
(97) EP 2297517 23.03.2011. 201112 De
(54) MEMBRANE WALL OF A LARGE-SCALE STEAM GENERATOR
(71) Hitachi Power Europe GmbH, Schifferstrasse 80, 47059 Duisburg, DE
(72) BECKER, Martin, Tempelhofer Strasse 96, 51375 Leverkusen, DE;
HUSEMANN, Ralf-Udo, Oeschberg 20b, 40885 Ratingen, DE
(74) Viering, Jentschura & Partner, Kennedydamm 55/Roßstr., 40476 Düsseldorf, DE

(51) (8) **EP 2294336 ***
F 23C 9/00
(30) US 30.04.2008. 150885
(86) PCT/US2009040477 14.04.2009.
(96) EP 09739416.7 14.04.2009. En
(87) WO2009134614 05.11.2009. 200945
(97) EP 2294336 16.03.2011. 201111 En
(54) LOW NOX BURNER
(71) Coen Company, Inc., 100 Foster City Boulevard, Foster City, CA 94404, US
(72) LIFSHITS, Vladimir, 140 Positano Circle, Redwood City, CA 94065, US;
LONDERVILLE, Stephen, B., 401 Kehoe Avenue, Half Moon Bay, CA 94019, US
(74) Manitz, Gerhart, Manitz, Finsterwald & Partner GbR, Martin-Greif-Strasse 1, 80336 München, DE

(51) (8) **EP 2304317 ***
F 23D 14/10
F 23Q 9/04
(86) PCT/IT2008000422 23.06.2008.
(96) EP 08790011.4 23.06.2008. It
(87) WO2009157021 30.12.2009. 200953
(97) EP 2304317 06.04.2011. 201114 En
(54) GAS BURNER FOR OVENS OR GRILLS
(71) SABAF S.p.A., Via Dei Carpini, 1, 25035 Ospitaletto (BS), IT
(72) BETTINZOLI, Angelo, Via Donizetti 25, I-25062 Concesio (BS), IT
(74) Marietti, Andrea, Marietti, Gislon e Trupiano S.r.l., Via Larga, 16, 20122 Milano, IT

(51) (8) **EP 2307800 ***
F 23D 14/10
F 23D 14/70
(86) PCT/IT2008000423 23.06.2008.
(96) EP 08790012.2 23.06.2008. It
(87) WO2009157022 30.12.2009. 200953
(97) EP 2307800 13.04.2011. 201115 En
(54) GAS BURNER FOR OVENS
(71) SABAF S.p.A., Via Dei Carpini, 1, 25035 Ospitaletto (BS), IT
(72) BETTINZOLI, Angelo, Via Donizetti 25, I-25062 Concesio (BS), IT
(74) Marietti, Andrea, et al, Marietti, Gislon e Trupiano S.r.l., Via Larga, 16, 20122 Milano, IT

(51) (8) **EP 2307803 ***
F 23G 5/027
F 23G 5/08
(30) IT 14.05.2008. BO20080292
(86) PCT/IT2009000208 11.05.2009.
(96) EP 09746299.8 11.05.2009. It
(87) WO2009139017 19.11.2009. 200947
(97) EP 2307803 13.04.2011. 201115 En
(54) COMBUSTION MATERIAL PROCESS AND RELATED APPARATUS

(71) Leon Engineering S.p.a., Via G. Leonardelli 3, 47891 Dogana (R.S.M.), SM
(72) AMADESI, Paolo, Via Andrea Costa 152, I-40134 Bologna (BO), IT
(74) Provvisionato, Paolo, Provvisionato & Co S.r.l., Piazza di Porta Mascarella 7, 40126 Bologna, IT

(51) (8) **WO 2010025739**
F 23J 15/04
F 23J 15/06
B 01D 47/06
B 01D 53/78
(30) DK 07.09.2008. 200801253
(86) PCT/DK2009050228 07.09.2009.
(96) WO 09776278.5 07.09.2009. En
(87) WO2010025739 11.03.2010. 201010
(97) WO 2010025739 11.03.2010. 201010 En
(54) METHOD AND SYSTEM FOR COOLING HOT GASES BY WATER INJECTION
(71) Dall Energy Holding ApS, Sjaelsøvej 53, 3460 Birkerød, DK
(72) BENTZEN, Jens Dall, Sjælsøvej 53, DK-3460 Birkerød, DK
(74) Plougmann & Vingtoft A/S, Sundkrogsgade 9, P.O. Box 831, 2100 CopenhagenØ, DK

(51) (8) **EP 2221538**
F 23J 15/04
(30) IT 23.02.2009. TV20090024
(96) EP 10153856.9 17.02.2010. En
(97) EP 2221538 25.08.2010. 201034 En
(54) Energy recovery device
(71) Eberle, Giorgio, Via Sartori, 60, 31053 Pieve di Soligo (TV), IT;
Mazzega, Massimo, Via B.go Danese, 120, 31010 Fregona (TV), IT
(72) Eberle, Giorgio, Via Sartori, 60, 31053 Pieve di Soligo (TV), IT;
Mazzega, Massimo, Via B.go Danese, 120, 31010 Fregona (TV), IT
(74) Modiano, Micaela Nadia, Modiano & Partners, Via Meravigli, 16, 20123 Milano, IT

(51) (8) **EP 2221539**
F 23J 15/04
(30) IT 23.02.2009. TV20090025
(96) EP 10153858.5 17.02.2010. En
(97) EP 2221539 25.08.2010. 201034 En
(54) Energy recovery apparatus
(71) Eberle, Giorgio, Via Sartori, 60, 31053 Pieve di Soligo (TV), IT;
Mazzega, Massimo, Via B.go Danese, 120, 31010 Fregona (TV), IT
(72) Eberle, Giorgio, Via Sartori, 60, 31053 Pieve di Soligo (TV), IT;
Mazzega, Massimo, Via B.go Danese, 120, 31010 Fregona (TV), IT
(74) Modiano, Micaela Nadia, Modiano & Partners, Via Meravigli, 16, 20123 Milano, IT

(51) (8) **EP 2294337 ***
F 23Q 3/00
F 23D 14/20
F 24C 3/10
(30) US 02.07.2008. 167028
(86) PCT/US2009049146 30.06.2009.
(96) EP 09774277.9 30.06.2009. En
(87) WO2010002826 07.01.2010. 201001
(97) EP 2294337 16.03.2011. 201111 En
(54) GAS BURNER ASSEMBLY WITH GAS COLLECTOR AND IGNITER
(71) Weber-Stephen Products CO., 200 E. Daniels Road, Palatine, IL 60067, US
(72) SCHLOSSER, Eric, 25596 W. Chatham Road, Barrington, IL 60010, US
(74) Crouch, David John, Bromhead Johnson, 19 Buckingham Street, London, WC2N 6EF, GB

(51) (8) **EP 2295872**
F 24D 7/00
F 24D 19/10
F 24H 7/04
(30) DE 24.08.2009. 102009038367
(96) EP 10008775.8 23.08.2010. De
(97) EP 2295872 16.03.2011. 201111 De
(54) Method and device for storing regenerative energy in energy recirculation systems
(71) Create GmbH & Co. KG, Dorfstraße 23 b, 06785 Horstdorf, DE
(72) Gräfner, DR. Klaus, Dorfstrasse 23b, 06785 Horstdorf, DE
(74) Dinter, Tilo, Nonnenstrasse 11b, 04229 Leipzig, DE

(51) (8) **EP 2304326 ***
F 24F 3/147
B 01D 46/52
B 31D 5/04
F 24F 12/00
F 28F 21/00
(30) US 14.01.2008. 6442 P
(86) PCT/CA2009000023 14.01.2009.
(96) EP 09702227.1 14.01.2009. En
(87) WO2009089615 23.07.2009. 200930
(97) EP 2304326 06.04.2011. 201114 En
(54) CROSS-PLEATED MEMBRANE CARTRIDGES, AND METHOD AND APPARATUS FOR MAKING CROSS-PLEATED MEMBRANE CARTRIDGES
(71) dPoint Technologies Inc., 560 Beatty Street, Suite 205, Vancouver BC V6B 2L3, CA
(72) MONTIE, Greg, 3008 13th Avenue, Surrey, British Columbia V6H 1R6, CA;
DEAN, James, Franklin, 3381 Radcliffe Avenue, West Vancouver, British Columbia V7V 1G7, CA;
MULLEN, Curtis, 1303 989 Nelson St, Vancouver, British Columbia V6Z 2S1, CA;
HILL, Robert, 13805 King Road, Surrey, British Columbia V3R 8E4, CA
(74) Buchhold, Jürgen, Patentanwälte, Olbricht Buchhold Keulertz & Partner, Am Weinberg 15, 35096 Weimar (Lahn), DE

(51) (8) **EP 2307816** *
F 24H 1/28
(30) IT 05.06.2008. MN20080010
(86) PCT/EP2009055309 30.04.2009.
(96) EP 09757373.7 30.04.2009. En
(87) WO2009146990 10.12.2009. 200950
(97) EP 2307816 13.04.2011. 201115 En
(54) FIRE TUBE CONDENSING BOILER FOR GENERATING HOT WATER
(71) Jahier, Giovanni, Via Tezze 28, 46100 Mantova, IT
(72) Jahier, Giovanni, Via Tezze 28, 46100 Mantova, IT
(74) Modiano, Micaela Nadia, et al, Dr. Modiano & Associati SpA, Via Meravigli 16, 20123 Milano, IT

(51) (8) **EP 2216610**
F 24H 9/20
G 01F 23/22
(30) FR 06.02.2009. 0900509
(96) EP 10356008.2 04.02.2010. Fr
(97) EP 2216610 11.08.2010. 201032 Fr
(54) Thermosensitive sensor for hot water tank
(71) Cotherm, Z.I. Les Levées, 38470 Vinay, FR
(72) Monneron, Cedric, 43 Rue Louis Guerin, 69100 Villeurbanne, FR
(74) Schmitt, John, Roosevelt Consultants, 109, rue Sully, BP 6138, 69466 Lyon Cédex 06, FR

(51) (8) **EP 2313708** *
F 24J 3/08
F 28D 21/00
F 25B 30/06
(30) US 13.06.2008. 131967 P
(86) PCT/US2009003592 15.06.2009.
(96) EP 09762945.5 15.06.2009. En
(87) WO2009151649 17.12.2009. 200951
(97) EP 2313708 27.04.2011. 201117 En
(54) SYSTEM AND METHOD OF CAPTURING GEOTHERMAL HEAT FROM WITHIN A DRILLED WELL TO GENERATE ELECTRICITY
(71) Parrella, Michael J., 40 Kellogg Hill Road, Weston, CT 06883, US
(72) Parrella, Michael J., 40 Kellogg Hill Road, Weston, CT 06883, US
(74) Klunker . Schmitt-Nilson . Hirsch, Patentanwälte, Destouchesstrasse 68, 80796 München, DE

(51) (8) **EP 2135022** *
F 25D 31/00
B 67D 1/08
(30) GB 05.04.2007. 0706747
(86) PCT/GB2007004921 20.12.2007.
(96) EP 07848650.3 20.12.2007. En
(87) WO2008122747 16.10.2008. 200842
(97) EP 2135022 23.12.2009. 200952 En
(54) A MOTOR PROTECTION DEVICE
(71) Totton Pumps Limited, Rushington Business Park, Totton, Southampton, Hampshire SO40 9AH, GB
(72) WYATT, Gary, David, County View, North Malvern Road, Worcester, Wordestershire WR14 1LT, GB
(74) Anderson, James Edward George, Elkington and Fife LLP, Prospect House, 8 Pembroke Road, Sevenoaks, Kent TN13 1XR, GB

(51) (8) **EP 2309218**
F 28B 3/04
A 23N 7/00
F 28B 11/00
(96) EP 09172327.0 06.10.2009. En
(97) EP 2309218 13.04.2011. 201115 En
(54) Recovery of heat from recurring charges of vapour
(71) BMA Nederland B.V., De Bleek 7, 3447 GV Woerden, NL
(72) Hafemann, Hartmut, Blumenhof 22, 31275 Lehrte, DE; Caspers, Gerald, Im Unterdorf 31, 38527 Meine, DE; van Loon, Erik, Kerkweg 10, 4255 GC Nieuwendijk, NL
(74) van Lookeren Campagne, Constantijn August, Jones Day, Hochhaus am Park, Grüneburgweg 102, 60323 Frankfurt am Main, DE

(51) (8) **EP 2310794** *
F 28G 15/02
(30) US 14.07.2008. 80303 P
(86) PCT/US2009050476 14.07.2009.
(96) EP 09790374.4 14.07.2009. En
(87) WO2010009084 21.01.2010. 201003
(97) EP 2310794 20.04.2011. 201116 En
(54) SOOTBLOWER WITH MODULAR CANOPY
(71) Clyde Bergemann, Inc., 4015 Presidential Parkway, Atlanta, GA 30340-3707, US;
Schwade, Hans, 3811 Wieuca Terrace, Atlanta, GA 30342, US;
Weinkle, Steve, 4015 Presidential Parkway, Atlanta, GA 30340, US;
Wadkins, Tony, 4015 Presidential Parkway, Atlanta, GA 30340, US
(72) SCHWADE, Hans, 3811 Wieuca Terrace, Atlanta, GA 30342, US;
WEINKLE, Steve, 4015 Presidential Parkway, Atlanta, GA 30340, US;
WADKINS, Tony, 4015 Presidential Parkway, Atlanta, GA 30340, US
(74) Gill, David Alan, W.P. Thompson & Co., 55 Drury Lane, London WC2B 5SQ, GB

(51) (8) **EP 2300771** *
F 41A 29/00
(86) PCT/IT2008000388 11.06.2008.
(96) EP 08789980.3 11.06.2008. It
(87) WO2009150674 17.12.2009. 200951
(97) EP 2300771 30.03.2011. 201113 En
(54) APPARATUS AND METHOD FOR CLEANING GUN BARRELS
(71) Pennisi, Carlo Paolo, Via Buttigliera Alta 26/5, 10090 Rosta (TO), IT
(72) Pennisi, Carlo Paolo, Via Buttigliera Alta 26/5, 10090 Rosta (TO), IT
(74) Turini, Laura, Studio Legale Turini, Via Lamarmora 55, 50121 Florence (FI), IT

(51) (8) **EP 2304378** *
F 41H 1/02
(30) FR 25.06.2008. 0854227
FR 15.12.2008. 0858565
(86) PCT/EP2009057958 25.06.2009.
(96) EP 09769313.9 25.06.2009. Fr
(87) WO2009156465 30.12.2009. 200953

(97) EP 2304378 06.04.2011. 201114 Fr
(54) METHOD FOR TESTING BALLISTIC PROTECTION EQUIPMENT AND ASSOCIATED DUMMY AND PROTECTION
(71) Compagnie Europeenne de Developpement Industriel, (C.E.D.I.), Magny le Freule, 14270 Mezidon Canon, FR
(72) LE CARPENTIER, Jérôme, La Haute Equerre, St Aubin du Thenney, F-27270 Broglie, FR
(74) Le Forestier, Eric, et al, Cabinet Régimbeau, 20, rue de Chazelles, 75847 Paris Cedex 17, FR

(51) (8) **EP 2297541** *
F 41H 5/02
(30) US 27.05.2008. 71917 P
US 12.06.2008. 155977
(86) PCT/US2008008331 07.07.2008.
(96) EP 08874638.3 07.07.2008. En
(87) WO2009151426 17.12.2009. 200951
(97) EP 2297541 23.03.2011. 201112 En
(54) APPARATUS FOR DEFEATING HIGH ENERGY PROJECTILES
(71) Force Protection Technologies, Inc., 9801 Highway 78, Ladson, SC 29456, US
(72) JOYNT, Vernon P., c/o Force Protection Industries Inc., 9801 Highway 78, Ladson, South Carolina 29456, US;
COLE, Robert A., c/o Force Protection Industries Inc., 9801 Highway 78, Ladson, South Carolina 29456, US;
BORDERS, Thomas, c/o Force Protection Industries Inc., 9801 Highway 78, Ladson, South Carolina 29456, US
(74) Roberts, Gwilym Vaughan, et al, Kilburn & Strode LLP, 20 Red Lion Street, London WC1R 4PJ, GB

(51) (8) **EP 2294375** *
G 01L 1/24
G 01L 5/16
(30) US 19.06.2008. 73904
(86) PCT/US2009047930 19.06.2009.
(96) EP 09767810.6 19.06.2009. En
(87) WO2009155501 23.12.2009. 200952
(97) EP 2294375 16.03.2011. 201111 En
(54) TACTILE SENSOR USING ELASTOMERIC IMAGING
(71) Massachusetts Institute of Technology, 77 Massachusetts Avenue, Cambridge, MA 02139, US
(72) ADELSON, Edward, H., 1 Wedge Pond Road, Winchester, MA 01890, US
(74) Althoff, Fredrik, Valea AB, Lindholmspiren 5, 417 56 Göteborg, SE

(51) (8) **EP 2126650** *
G 01L 3/10
(30) US 06.01.2007. 883780 P
(86) PCT/US2008050336 05.01.2008.
(96) EP 08705714.7 05.01.2008. En
(87) WO2008086248 17.07.2008. 200829
(97) EP 2126650 02.12.2009. 200949 En
(54) DEVICES AND METHODS FOR DETECTING RATES OF CHANGE OF TORQUE
(71) Magcanica, Inc., 4204 Jutland Drive, San Diego, CA 92117, US
(72) GARSHELIS, Ivan, J., 156 Washington Mountain Road, Dalton, MA 01226, US;
KARI, Ryan, J., 4084 Crystal Dawn Lane 203, San Diego, CA 92122, US;
TOLLENS, Stijn, P., L., 1707 Chalcedony Street, Apartment 12, San Diego, CA 92109, US
(74) Viering, Jentschura & Partner, Grillparzerstrasse 14, 81675 München, DE

(51) (8) **EP 2163873**
G 01M 1/00
(30) IT 12.09.2008. MO20080231
(96) EP 09169649.2 07.09.2009. It
(97) EP 2163873 17.03.2010. 201011 En
(54) Balancing machine for balancing vehicle wheels
(71) SICAM S.r.l., Via della Costituzione, 49, 42015 Correggio (Reggio Emilia), IT
(72) Montanari, Marco, Via Amendola, 64, 42040 Campegine (RE), IT;
Nicolini, Roberto, Via Fratelli Friggeri, 2, 42010, Rio Saliceto (RE), IT
(74) Brunacci, Marco, et al, BRUNACCI & PARTNERS S.r.l., Via Giardini 625, 41125 Modena, IT

(51) (8) **EP 2163874**
G 01M 1/00
(30) IT 12.09.2008. MO20080230
(96) EP 09169661.7 07.09.2009. It
(97) EP 2163874 17.03.2010. 201011 En
(54) Balancing machine for balancing vehicle wheels
(71) SICAM S.r.l., Via della Costituzione, 49, 42015 Correggio (Reggio Emilia), IT
(72) Montanari, Marco, Via Amendola, 64, 42040 Campegine (RE), IT;
Nicolini, Roberto, Via Fratelli Friggeri, 2, 42010, Rio Saliceto (RE), IT
(74) Brunacci, Marco, et al, BRUNACCI & PARTNERS S.r.l., Via Giardini 625, 41125 Modena, IT

(51) (8) **EP 2163875**
G 01M 1/02
(30) IT 12.09.2008. MO20080229
(96) EP 09169646.8 07.09.2009. It
(97) EP 2163875 17.03.2010. 201011 En
(54) Balancing machine for balancing vehicle wheels
(71) SICAM S.r.l., Via della Costituzione, 49, 42015 Correggio (Reggio Emilia), IT
(72) Matteucci, Marco, Via 2 Agosto 1980, 11, 42010, Rio Saliceto (RE), IT
(74) Brunacci, Marco, et al, BRUNACCI & PARTNERS S.r.l., Via Giardini 625, 41125 Modena, IT

(51) (8) **EP 1898197**
G 01M 1/22
(30) IT 05.09.2006. MO20060267
(96) EP 07015170.9 02.08.2007. En
(97) EP 1898197 12.03.2008. 200811 En
(54) Upgraded balancing machine for vehicle wheels
(71) SICAM S.r.l., Via della Costituzione, 49, 42015 Correggio (Reggio Emilia), IT
(72) Montanari, Marco, Via Amendola, 64, 42040 Campegine (RE), IT
(74) Brunacci, Marco, APTA S.r.l., Via Giardini 625, 41125 Modena, IT

(51) (8) **EP 2316011** *
G 01N 11/00
G 01N 11/16
(30) GB 20.06.2008. 0811307
(86) PCT/GB2009050712 22.06.2009.
(96) EP 09766164.9 22.06.2009. En
(87) WO2009153603 23.12.2009. 200952
(97) EP 2316011 04.05.2011. 201118 En
(54) TEST APPARATUS
(71) Colquhoun, Ross, Mud Automatics, Unit 20, Altens Mini Units, Souterhead Road, Altens Aberdeen, Aberdeenshire AB12 3LF, GB
(72) Colquhoun, Ross, Mud Automatics, Unit 20, Altens Mini Units, Souterhead Road, Altens Aberdeen, Aberdeenshire AB12 3LF, GB
(74) Crosby, Wendy Agnes, Murgitroyd & Company, Scotland House, 165-169 Scotland Street, Glasgow G5 8PL, GB

(51) (8) **EP 2300804** *
G 01N 21/47
G 01N 21/86
G 01N 21/27
(30) HU 20.06.2008. 0800386
HU 09.06.2009. 0900350
(86) PCT/HU2009000051 17.06.2009.
(96) EP 09766169.8 17.06.2009. Hu
(87) WO2009153609 23.12.2009. 200952
(97) EP 2300804 30.03.2011. 201113 En
(54) OPTICAL MEASURING UNIT AND METHOD FOR CARRYING OUT A REFLECTIVE MEASUREMENT
(71) 77 Elektronika Müszeripari Kft., Fehérvári út 98, 1118 Budapest, HU
(72) KUNSTÁR, Károly, Kérö u. 4 VIII/53, H-1112 Budapest, HU
(74) Kereszty, Marcell, Gödölle, Kékes, Mészaros & Szabo, Patent and Trademark Attorneys, Keleti Karoly u. 13/b., 1024 Budapest, HU

(51) (8) **EP 2140253** *
G 01N 23/04
G 06F 3/048
G 06T 3/40
G 06T 5/00
(30) CA 30.03.2007. 2583557
US 30.03.2007. 694338
(86) PCT/CA2008000275 11.02.2008.
(96) EP 08714598.3 11.02.2008. En
(87) WO2008119151 09.10.2008. 200841
(97) EP 2140253 06.01.2010. 201001 En
(54) USER INTERFACE FOR USE IN SECURITY SCREENING PROVIDING IMAGE ENHANCEMENT CAPABILITIES AND APPARATUS FOR IMPLEMENTING SAME
(71) Optosecurity Inc., 505 Blvd. du Parc Technologique, Québec QC G1P 4S9, CA
(72) GUDMUNDSON, Dan, 7 Jardin de Merici, 1002, Quebec, Quebec G1S 4N8, CA;
PERRON, Luc, 1127 De La Chatelaine, Charlesbourg, Quebec G2L 1A1, CA
(74) Callon de Lamarck, Jean-Robert, Cabinet Regimbeau, 20 rue de Chazelles, 75847 Paris cedex 17, FR

(51) (8) **EP 2313766** *
G 01N 29/04
F 16L 55/26
F 16L 55/48
G 01N 29/07
G 01N 29/34
(30) US 05.08.2008. 86212 P
US 18.03.2009. 161148 P
(86) PCT/CA2009001099 05.08.2009.
(96) EP 09804424.1 05.08.2009. En
(87) WO2010015082 11.02.2010. 201006
(97) EP 2313766 27.04.2011. 201117 En
(54) DEVICE AND METHOD TO ASSESS IMPAIRMENT OF PIPELINE WALL STRENGTH
(71) PURE TECHNOLOGIES LTD, Third Floor, 705 - 11th Avenue S.W., Calgary, Alberta T2R 0E3, CA
(72) PAULSON, Peter, O., 320 Pumphill Gardens S.W., Calgary, Alberta T2V 4M7, CA
(74) Jordan, Volker Otto Wilhelm, et al, Weickmann & Weickmann, Patentanwälte, Postfach 860 820, 81635 München, DE

(51) (8) **EP 2300814** *
G 01N 29/07
G 01N 29/265
G 01N 29/28
(30) IT 14.07.2008. MI20081278
(86) PCT/IB2009006234 10.07.2009.
(96) EP 09797592.4 10.07.2009. It
(87) WO2010007500 21.01.2010. 201003
(97) EP 2300814 30.03.2011. 201113 En
(54) SELF-PROPELLING DEVICE FOR POSITIONING OF PROBES FOR NON-DESTRUCTIVE TESTING
(71) Procontrol S.R.L., Via Sassoferrato, 1, 20135 Milano, IT
(72) COCO, Giuseppe, Viale dei Gabbiani 19, I-09012 Capoterra (Cagliari), IT
(74) Coletti, Raimondo, et al, Barzanò & Zanardo Milano S.p.A., Via Borgonuovo, 10, 20121 Milano, IT

(51) (8) **EP 2313769** *
G 01N 33/48
G 01N 33/50
(30) US 23.07.2008. 135667 P
(86) PCT/US2009004247 22.07.2009.
(96) EP 09788974.5 22.07.2009. En
(87) WO2010011305 28.01.2010. 201004
(97) EP 2313769 27.04.2011. 201117 En
(54) 5-HT6 RECEPTOR AND MODULATORS THEREOF FOR THE TREATMENT OF INSULIN-RELATED DISORDERS
(71) Arena Pharmaceuticals, Inc., 6166 Nancy Ridge Drive, San Diego, CA 92121-3223, US
(72) LEONARD, James, N., 10667 Viacha Drive, San Diego,CA 92124, US;
CHU, Zhi-Liang, 11489 Creekstone Lane, San Diego,CA 92128, US;
SMITH, Brian, M., 13182 Mesa Crest Place, San Diego,CA 92129, US
(74) Cripps, Joanna Elizabeth, et al, Mewburn Ellis LLP, 33 Gutter Lane, London, EC2V 8AS, GB

(51) (8) **EP 2228651**
G 01N 33/50
G 01N 33/68
G 01N 33/569
(30) DK 05.09.2006. 200601145
DK 20.02.2007. 200700262
(96) EP 10168333.2 05.09.2007. En
(97) EP 2228651 15.09.2010. 201037 En
(54) IP-10 Based Immunological Monitoring
(71) Hvidovre Hospital, Kettegård Allé 30, 2650 Hvidovre, DK
(72) Ruhwald, Morten, Tøndergade 6, 5. sal, 1752 Copenhagen V, DK;
Ravn, Pernille, Azaleavej 38, st., 2000 Frederiksberg, DK;
Eugen-Olsen, Jesper, Vedbendvej 14, 2900 Hellerup, DK
(74) Plougmann & Vingtoft A/S, Sundkrogsgade 9, P.O. Box 831, 2100 CopenhagenØ, DK

(51) (8) **EP 2294413 ***
G 01N 33/50
G 01N 33/15
C 12Q 1/02
(30) US 12.06.2008. 61062 P
(86) PCT/US2009047255 12.06.2009.
(96) EP 09763751.6 12.06.2009. En
(87) WO2009152463 17.12.2009. 200951
(97) EP 2294413 16.03.2011. 201111 En
(54) METHOD FOR SCREENING FOR COMPOUNDS THAT INHIBIT NEURODEGENERATION
(71) Genentech, Inc., 1 DNA Way, South San Francisco, CA 94080, US
(72) NIKOLAEV, Anatoly, 1101 Laguna Avenue, Apt. 203, Burlingame, CA 94010, US;
TESSIER-LAVIGNE, Marc, 255 Selby Lane, Atherton, CA 94027, US
(74) Kiddle, Simon John, et al, Mewburn Ellis LLP, 33 Gutter Lane, London, EC2V 8AS, GB

(51) (8) **EP 2300823 ***
G 01N 33/50
G 01N 33/53
C 12Q 1/00
(30) US 25.06.2008. 75728 P
(86) PCT/US2009048698 25.06.2009.
(96) EP 09771053.7 25.06.2009. En
(87) WO2009158521 30.12.2009. 200953
(97) EP 2300823 30.03.2011. 201113 En
(54) BLOOD TRANSCRIPTIONAL SIGNATURE OF MYCOBACTERIUM TUBERCULOSIS INFECTION
(71) Baylor Research Institute, Suite 125, 3434 Live Oak Street, Dallas, TX 75204, US;
The National Institute For Medical Research, The Ridgeway, Mill Hill, London NW7 1AA, GB;
Imperial College Healthcare NHS Trust, The Bays, South Wharf Road, St. Mary's Hospital, London W2 1NY, GB
(72) BANCHEREAU, Jacques, F., 6730 Northaven Road, Dallas,TX 75230, US;
CHAUSSABEL, Damien, 4532 Southpointe Drive, Richardson,TX 75082, US;
O'GARRA, Anne, 116 Greenfield Gardens, London NW2 1HY, GB;
BERRY, Matthew, 303c West End Lane, London NW6 1RD, GB;
KON, Onn, Min, 60 Llanvanor Road, London NW2 2AP, GB
(74) Sonn & Partner Patentanwälte, Riemergasse 14, 1010 Wien, AT

(51) (8) **EP 2307885 ***
G 01N 33/569
(30) EP 02.07.2008. 08450097
(86) PCT/EP2009058354 02.07.2009.
(96) EP 09772519.6 02.07.2009. En
(87) WO2010000819 07.01.2010. 201001
(97) EP 2307885 13.04.2011. 201115 En
(54) CELLULAR COPD DIAGNOSIS
(71) Aposcience AG, Rauhensteingasse 4/3, 1010 Wien, AT
(72) ANKERSMIT, Jan, Hendrik, Waaggasse 17/19/26, A-1040 Vienna, AT
(74) Sonn & Partner Patentanwälte, Riemergasse 14, 1010 Wien, AT

(51) (8) **EP 2297580 ***
G 01N 33/574
(30) US 09.06.2008. 60067 P
(86) PCT/IB2009005884 09.06.2009.
(96) EP 09762043.9 09.06.2009. En
(87) WO2009150513 17.12.2009. 200951
(97) EP 2297580 23.03.2011. 201112 En
(54) PROTEIN
(71) Oxford Biotherapeutics Ltd., 94A Milton Park, Abingdon, Oxon OX14 4RY, GB
(72) ROHLFF, Christian, Oxford Biotherapeutics Ltd., The Forum, 86 Milton Park, Abingdon, Oxfordshire OX14 4RY, GB
(74) Teuten, Andrew John, Sagittarius IP, Taylor House, 39 High Street, Marlow, Bucks SL7 2AF, GB

(51) (8) **EP 2307889 ***
G 01N 33/68
(30) EP 02.07.2008. 08450098
(86) PCT/EP2009058357 02.07.2009.
(96) EP 09772520.4 02.07.2009. En
(87) WO2010000820 07.01.2010. 201001
(97) EP 2307889 13.04.2011. 201115 En
(54) COPD DIAGNOSIS
(71) Aposcience AG, Rauhensteingasse 4/3, 1010 Wien, AT
(72) ANKERSMIT, Jan, Hendrik, Waaggasse 17/19/26, A-1040 Vienna, AT
(74) Sonn & Partner Patentanwälte, Riemergasse 14, 1010 Wien, AT

(51) (8) **EP 2297584 ***
G 01N 33/92
C 11C 3/10
(30) EP 10.06.2008. 08010504
DE 08.09.2008. 102008046227
(86) PCT/EP2009004043 05.06.2009.
(96) EP 09761434.1 05.06.2009. De
(87) WO2009149871 17.12.2009. 200951
(97) EP 2297584 23.03.2011. 201112 De
(54) HIGH THROUGHPUT METHOD FOR ANALYZING THE FATTY ACID COMPOSITION IN PLASMA PHOSPHOGLYCERIDES
(71) Ludwig-Maximilians-Universität, Geschwister-Scholl-Platz 1, 80539 München, DE

(72) GLASER, Claudia, Pfundmayerstrasse 25, 81375 München, DE;
DEMMELMAIR, Hans, DR. VON Haunersche Kinderklinik, Lindwurmstrasse 4, 80337 München, DE;
KOLETZKO, Berthold, Zypressenweg 2a, 81377 München, DE
(74) Leissler-Gerstl, Gabriele, Hoefer & Partner, Patentanwälte, Pilgersheimer Straße 20, D-81543 München, DE

(51) (8) **EP 2312334**
G 01S 13/34
G 01S 13/74
(96) EP 09173013.5 14.10.2009. En
(97) EP 2312334 20.04.2011. 201116 En
(54) Method for measuring the distance between tags
(71) Nederlandse Organisatie voor Toegepast, - Natuurwetenschappelijk Onderzoek TNO, Schoemakerstraat 97, 2628 VK Delft, NL
(72) Busking, Erik Bert, Meloenstraat 98, 2564 TK Den Haag, NL;
Elferink, Franciscus Hedrikus, Akelei 2, 2211 MR Noordwijkerhout, NL;
van den Hoef, Frank Ernst Antoine, Oranjepoldererf 60, 2807 NG Gouda, NL
(74) Hatzmann, Martin, et al, Vereenigde, Johan de Wittlaan 7, 2517 JR Den Haag, NL

(51) (8) **EP 2026106**
G 01V 11/00
(96) EP 07015136.0 02.08.2007. De
(97) EP 2026106 18.02.2009. 200908 De
(54) Method for geo-referenced representation of measuring values of a measuring field determined using ground detectors and detector for use
(71) Vallon GmbH, Im Grund 3, 72800 Eningen, DE
(72) Kühner, Jens, Hindenburgstrasse 28, 72762 Reutlingen, DE
(74) Klocke, Peter, ABACUS Patentanwälte, Klocke Späth Barth, European Patent and Trademark Attorneys, Kappelstrasse 8, 72160 Horb, DE

(51) (8) **EP 2069865 ***
G 03B 21/56
G 09B 9/30
G 09B 27/00
H 04N 9/31
(30) US 06.10.2006. 850298 P
(86) PCT/US2007068004 02.05.2007.
(96) EP 07761730.6 02.05.2007. En
(87) WO2008042465 10.04.2008. 200815
(97) EP 2069865 17.06.2009. 200925 En
(54) THREE-DIMENSIONAL INTERNAL BACK-PROJECTION SYSTEM AND METHOD FOR USING THE SAME
(71) Lalley Brothers Scientific, LLC, 229 Sanborn Street, Frankllin, NH 03235, US
(72) LALLEY, Marc, 229 Sanborn Street, Franklin, New Hampshire 03235, US;
LALLEY, Matthew, 229 Sanborn Street, Franklin, New Hampshire 03235, US
(74) Cooper, John, Murgitroyd & Company, 165-169 Scotland Street, Glasgow G5 8PL, GB

(51) (8) **EP 1770469**
G 05D 23/19
(30) DE 21.09.2005. 102005045198
(96) EP 06017411.7 22.08.2006. De
(97) EP 1770469 04.04.2007. 200714 De
(54) Method and system for determining characteristic thermal data of a radiator
(71) Techem Energy Services GmbH, Hauptstraße 89, 65760 Eschborn, DE
(72) Kähler, Arne, DR., Lissaer Strasse 24B, 12683 Berlin, DE
(74) KEIL & SCHAAFHAUSEN, Patentanwälte, Cronstettenstraße 66, 60322 Frankfurt am Main, DE

(51) (8) **EP 2306271**
G 06F 3/01
G 06F 3/041
H 04M 1/725
(96) EP 09171856.9 30.09.2009. En
(97) EP 2306271 06.04.2011. 201114 En
(54) Electronic device including tactile touch-sensitive display and method of controlling same
(71) RESEARCH IN MOTION LIMITED, 295 Phillip Street, Waterloo, Ontario N2L 3W8, CA
(72) Pertuit, Michael, Joseph, 63851-5000 Riverside Drive, Building 6, Brazos East, Irving, TX 75039, US;
Dill, Scott, Leonard, 79619-440 Phillip Street, Waterloo Ontario N2L 5R9, CA
(74) MERH-IP, Matias Erny Reichl Hoffmann, Paul-Heyse-Strasse 29, 80336 München, DE

(51) (8) **EP 2313820 ***
G 06F 3/01
G 06F 3/048
H 04M 1/725
(30) US 15.07.2008. 80978 P
US 15.07.2008. 80981 P
US 15.07.2008. 80985 P
US 15.07.2008. 80987 P
US 29.01.2009. 148312 P
US 26.05.2009. 181280 P
(86) PCT/US2009050579 14.07.2009.
(96) EP 09790410.6 14.07.2009. En
(87) WO2010009157 21.01.2010. 201003
(97) EP 2313820 27.04.2011. 201117 En
(54) SYSTEMS AND METHODS FOR PHYSICS-BASED TACTILE MESSAGING
(71) Immersion Corporation, 801 Fox Lane, San Jose, CA 95131, US
(72) BIRNBAUM, David, 311 Oak Street, 327, Oakland, CA 94607, US;
ULLRICH, Christopher, J., 227 Palomares Avenue, Ventura, CA 93003, US;
GRANT, Danny, 1784 Delunebourg, Laval, QC H7M 2A1, CA
(74) Boff, James Charles, Phillips & Leigh, 5 Pemberton Row, London EC4A 3BA, GB

(51) (8) **EP 2306273**
G 06F 3/02
G 06F 3/048
G 06F 3/033
G 06F 3/023
(96) EP 09171977.3 01.10.2009. En

(97) EP 2306273 06.04.2011. 201114 En
(54) Apparatus and method for invoking a function based on a gesture input
(71) RESEARCH IN MOTION LIMITED, 295 Phillip Street, Waterloo, Ontario N2L 3W8, CA
(72) Fyke, Steven Henry, 72943-305 Phillip Street, Waterloo Ontario N2L 3W8, CA;
Pasquero, Jerome, 74260-305 Phillip Street, Waterloo Ontario N2L 3W8, CA;
Defazio, Michael Joseph, 44 Forest Hill Crescent, Fronthill Ontario L0S 1E1, CA
(74) Reichl, Wolfgang, MERH-IP, Matias Erny Reichl Hoffmann, Paul-Heyse-Straße 29, 80336 München, DE

(51) (8) **EP 2135177 ***
G 06F 3/023
G 06F 17/21
G 06F 17/22
G 06F 17/27
(30) US 07.03.2007. 905295 P
(86) PCT/AU2008000297 05.03.2008.
(96) EP 08714345.9 05.03.2008. En
(87) WO2008106729 12.09.2008. 200837
(97) EP 2135177 23.12.2009. 200952 En
(54) METHOD SYSTEM AND APPARATUS FOR ENTERING TEXT ON A COMPUTING DEVICE
(71) Kannuu Pty Ltd, 2 Glenlee Close, Mount Kuring-Gai, NSW 2080, AU
(72) DINN, Kevin, W., 2 Glenlee Close, Mount Kuring-Gai, New South Wales 2080, AU
(74) Holzwarth-Rochford, Andreas, Jones Day, Grüneburgweg 102, 60323 Frankfurt, DE

(51) (8) **EP 2137620 ***
G 06F 11/00
(30) US 24.04.2007. 790225
(86) PCT/US2008001112 29.01.2008.
(96) EP 08724891.0 29.01.2008. En
(87) WO2008133762 06.11.2008. 200845
(97) EP 2137620 30.12.2009. 200953 En
(54) INSIDER THREAT DETECTION
(71) THE MITRE CORPORATION, 7515 Colshire Drive, MacLean, VA 22102, US
(72) STEPHENS, Gregory, D., 8634 Victoria Road, Springfield, VA 22151, US;
MALOOF, Marcus, A., 7111 Woodmont Avenue 704, Bethesda, MD 20815, US
(74) Hofmann, Harald, Sonnenberg Fortmann, Patent- und Rechtsanwälte, Herzogspitalstrasse 10a, 80331 München, DE

(51) (8) **EP 2304592 ***
G 06F 15/173
(30) US 10.06.2009. 481816
US 16.06.2008. 61662
(86) PCT/US2009003540 11.06.2009.
(96) EP 09767021.0 11.06.2009. En
(87) WO2009154708 23.12.2009. 200952
(97) EP 2304592 06.04.2011. 201114 En
(54) SYSTEM OF ACQUIRING SHOPPER INSIGHTS AND INFLUENCING SHOPPER PURCHASE DECISIONS
(71) Sunrise R&D Holdings, LLC, 1014 Vine Street, Cincinnati, OH 45202, US
(72) BONNER, Brett, Bracewell, 1421 Maple Ridge Drive, New Richmond, OH 45157, US;
HJELM, Christopher, Todd, 6350 Clippinger Drive, Cincinnati, OH 45243, US;
JONES, Titus, Arthur, 1950 Peach Blossom Lane, Hebron, KY 41048, US;
MENZ, Gregory, Michael, 1071 Celestial St 1800, Cincinnati, OH 45202, US;
OSBORNE, John, Edward, 5638 Indian Hill Court, Indian Springs, OH 45011, US;
PERKINS, Dion, Brent, 8912 Chapelsquare Lane, Cincinnati, OH 45242, US
(74) Walker, Ross Thomson, Potts, Kerr & Co., 15 Hamilton Square, Birkenhead, Merseyside CH41 6BR, GB

(51) (8) **EP 2315127**
G 06F 17/00
G 06F 17/30
(30) US 02.04.2004. 817161
(96) EP 10181726.0 31.03.2005. En
(97) EP 2315127 27.04.2011. 201117 En
(54) Custom entities and fields in a multi-tenant database system
(71) Salesforce.Com, Inc., The Landmark, One Market, Suite 300, San Francisco, CA 94105, US
(72) Weissmann Craig, 1258 Clayton Street, San Francisco, CA 94114, US;
Wong, Simon, 531 Darmouth Avenue, San Carlos, CA 94070, US
(74) Vandeberg, Marie-Paule L.G., et al, Office Kirkpatrick S.A., Avenue Wolfers 32, 1310 La Hulpe, BE

(51) (8) **EP 2122513 ***
G 06F 17/30
(30) US 07.01.2007. 650732
(86) PCT/US2008000062 03.01.2008.
(96) EP 08827333.9 03.01.2008. En
(87) WO2009023040 19.02.2009. 200908
(97) EP 2122513 25.11.2009. 200948 En
(54) SYNCHRONIZATION METHODS AND SYSTEMS
(71) APPLE INC., 1 Infinite Loop, Cupertino, CA 95014, US
(72) FREEDMAN, Gordon, J., 2154 Staunton Court, Palo Alto, CA 94306, US
(74) Gillard, Matthew Paul, et al, Withers & Rogers LLP, Goldings House, 2 Hays Lane, London, SE1 2HW, GB

(51) (8) **EP 2137596 ***
G 06F 19/00
(30) US 02.04.2007. 732068
(86) PCT/US2008059055 01.04.2008.
(96) EP 08733053.6 01.04.2008. En
(87) WO2008122017 09.10.2008. 200841
(97) EP 2137596 30.12.2009. 200953 En
(54) METHOD AND SYSTEM FOR ORGANIZING, STORING, CONNECTING AND DISPLAYING MEDICAL INFORMATION
(71) Yao, Robert Y., 901 E. Van Buren, Phoenix, AZ 85006, US
(72) Yao, Robert Y., 901 E. Van Buren, Phoenix, AZ 85006, US
(74) Hofstetter, Alfons J., Hofstetter, Schurack & Skora, Balanstrasse 57, 81541 München, DE

(51) (8) **EP 2306367**
G 06K 9/20
(30) CN 28.07.2008. 200810117257
(86) PCT/CN2009072928 27.07.2009.
(96) EP 09802408.6 27.07.2009. Zh
(87) WO2010012215 04.02.2010. 201005
(97) EP 2306367 06.04.2011. 201114 En
(54) DUAL CAMERAS FACE RECOGNITION DEVICE AND METHOD
(71) Hanwang Technology Co., Ltd., 3rd Floor, Building 5, 8 Dongbeiwang West Road, Haidian District, Beijing 100193, CN
(72) SHI, Jian, 3rd Floor, Building 5, 8 Dongbeiwang West Road, Haidian District, Beijing 100193, CN;
HUANG, Lei, 3rd Floor, Building 5, 8 Dongbeiwang West Road, Haidian District, Beijing 100193, CN
(74) Mattsson, Niklas, et al, Awapatent AB, P.O. Box 45086, 104 30 Stockholm, SE

(51) (8) **EP 2135199 ***
G 06M 1/04
G 06M 1/08
(30) US 02.04.2007. 921320 P
GB 11.04.2007. 0706999
(86) PCT/EP2008002590 01.04.2008.
(96) EP 08734940.3 01.04.2008. En
(87) WO2008119552 09.10.2008. 200841
(97) EP 2135199 23.12.2009. 200952 En
(54) METERED-DOSE INHALER
(71) Ivax Pharmaceuticals Ireland, Unit 301 Industrial Park, Waterford, IE
(72) FENLON, Derek, Unit 301, Industrial Park, Waterford, IE
(74) Cottam, David William, et al, Teva Europe Patent Department, 167 Fleet Street, London, EC4A 2EA, GB

(51) (8) **EP 2297688 ***
G 06Q 30/00
(30) US 03.07.2008. 129554
(86) PCT/US2009047686 17.06.2009.
(96) EP 09774046.8 17.06.2009. En
(87) WO2010002594 07.01.2010. 201001
(97) EP 2297688 23.03.2011. 201112 En
(54) ADVERTISING FORECAST AND REVENUE SYSTEMS AND METHODS
(71) AOL LLC, 22000 AOL Way, Dulles, VA 20166, US
(72) ELDRETH, John, Paul, 15120 Philip Lee Road, Chantilly, VA 20151, US;
PASSANTE, Christopher, Guy, 931 Holly Creek Drive, Great Falls, VA 22066, US
(74) Müller-Boré & Partner, Patentanwälte, Grafinger Straße 2, 81671 München, DE

(51) (8) **EP 2321789 ***
G 06Q 50/00
C 12Q 1/68
(30) US 01.07.2008. 77439
US 17.07.2008. 81596
(86) PCT/US2009049447 01.07.2009.
(96) EP 09774470.0 01.07.2009. En
(87) WO2010003020 07.01.2010. 201001
(97) EP 2321789 18.05.2011. 201120 En
(54) METHODS AND SYSTEMS FOR ASSESSMENT OF CLINICAL INFERTILITY
(71) The Board of Trustees of, The Leland Stanford Junior University, 1705 El Camino Real, Palo Alto, CA 94306, US
(72) YAO, Mylene, W.M., Stanford University School of Medecine, Dept Ob/Gyn, Div of Reproductive Endo&Infertility, 300 Pasteur Drive, MC : 5317, Stanford, California 94305-5317, US;
WONG, Wing, H., Stanford University Dept of Statistics, Sequoia Hall, 390 Serra Mall, Stanford,California 94305-4065, US
(74) Ellis, Katherine Elizabeth Sleigh, Williams Powell, Staple Court, 11 Staple Inn Buildings, GB-London WC1V 7QH, GB

(51) (8) **EP 2296115**
G 06T 15/00
(30) US 20.11.2003. 718318
(96) EP 10075685.7 19.11.2004. En
(97) EP 2296115 16.03.2011. 201111 En
(54) A graphics processing architecture employing a unified shader
(71) ATI Technologies Inc., One Commerce Valley Drive East, Markham, Ontario L3T 7X6, CA
(72) Morein, Steven, 10 Magazine, Apt. 801, Cambridge, Massachusetts 02139, US;
Lefebvre, Laurent, 124 Parenchere, Lachenaie, Quebec J6W 6A5, CA;
Gruber, Andy, 215 Pleasant Street, Arlington, Massachusetts 02476, US;
Skende, Andi, 49 Sheridan Drive, 11, Shrewsbury, Massachusetts 01545, US
(74) Waldren, Robin Michael, Marks & Clerk LLP, 90 Long Acre, London, WC2E 9RA, GB

(51) (8) **EP 2296116**
G 06T 15/00
(30) US 20.11.2003. 718318
(96) EP 10075686.5 19.11.2004. En
(97) EP 2296116 16.03.2011. 201111 En
(54) A graphics processing architecture employing a unified shader
(71) ATI Technologies Inc., One Commerce Valley Drive East, Markham, Ontario L3T 7X6, CA
(72) Morein, Steven, 10 Magazine, Apt. 801, Cambridge, Massachusetts 02139, US;
Lefebvre, Laurent, 124 Parenchere, Lachenaie, Quebec J6W 6A5, CA;
Gruber, Andy, 215 Pleasant Street, Arlington, Massachusetts 02476, US;
Skende, Andi, 49 Sheridan Drive, 11, Shrewsbury, Massachusetts 01545, US
(74) Waldren, Robin Michael, Marks & Clerk LLP, 90 Long Acre, London, WC2E 9RA, GB

(51) (8) **EP 2299408**
G 06T 15/00
G 06T 15/80
(30) US 20.11.2003. 718318
(96) EP 10075687.3 19.11.2004. En
(97) EP 2299408 23.03.2011. 201112 En
(54) A graphics processing architecture employing a unified shader
(71) ATI Technologies Inc., One Commerce Valley Drive East, Markham, Ontario L3T 7X6, CA

(72) Morein, Steven, 10 Magazine, Apt. 801, Cambridge, MA 02139, US;
Lefebvre, Laurent, 124 Parenchere, Lachenaie, Quebec J6W 6A5, CA;
Gruber, Andy, 215 Pleasant Street, Arlington, MA 02476, US;
Skende, Andi, 49 Sheridan Drive, 11, Shrewsbury, MA 01545, US
(74) Waldren, Robin Michael, Marks & Clerk LLP, 90 Long Acre, London, WC2E 9RA, GB

(51) (8) **EP 2309460**
G 06T 15/00
G 06T 15/80
(30) US 20.11.2003. 718318
(96) EP 10075688.1 19.11.2004. En
(97) EP 2309460 13.04.2011. 201115 En
(54) A graphics processing architecture employing a unified shader
(71) ATI Technologies ULC, One Commerce Valley Drive East, Markham, Ontario L3T 7X6, CA
(72) Morein, Steven, 10 Magazine, Apt. 801, Cambridge, Massachusetts 02139, US;
Lefebvre, Laurent, 124 Parenchere, Lachenale J6W BA5, CA;
Gruber, Andy, 215 Pleasant Street, Arlington, Massachusetts 02476, US;
Skende, Andi, 49 Sheridan Drive, 11, Shrewsbury, Massachusetts 01545, US
(74) Waldren, Robin Michael, Marks & Clerk LLP, 90 Long Acre, London, WC2E 9RA, GB

(51) (8) **EP 2294556 ***
G 07C 5/00
G 07C 5/08
(30) DE 04.06.2008. 102008026676
(86) PCT/EP2009056654 29.05.2009.
(96) EP 09757490.9 29.05.2009. De
(87) WO2009147109 10.12.2009. 200950
(97) EP 2294556 16.03.2011. 201111 De
(54) MOBILE IDENTIFICATION TRANSMITTER IN A SAFETY SYSTEM
(71) Huf Hülsbeck & Fürst GmbH & Co. KG, Steeger Strasse 17, 42551 Velbert, DE
(72) MÖNIG, Stefan, An der Rennbahn 7, 58332 Schwelm, DE;
SCHUMACHER, Helmut, Bahnhofsallee 5, 48653 Coesfeld, DE;
SIMON, Jörg, Chemnitzerstrasse 10, 42489 Wülfrath, DE;
SCHRÖTER, Veith, Kirchfeldstrasse 28a, 45219 Essen, DE
(74) Patentanwälte Bals & Vogel, Patentanwälte, Universitätsstrasse 142, 44799 Bochum, DE

(51) (8) **EP 2313869 ***
G 07C 5/02
G 01C 19/00
(30) DK 27.06.2008. 200800896
(86) PCT/DK2009050144 25.06.2009.
(96) EP 09768855.0 25.06.2009. En
(87) WO2009155933 30.12.2009. 200953
(97) EP 2313869 27.04.2011. 201117 En
(54) ELECTRONIC PARKING DISC COMPRISING MOVEMENT DETECTION MEANS
(71) Bent Neubauer Holding ApS, Droshoved 9, 7120 Vejle, DK
(72) NEUBAUER, Bent, Droshoved 9, DK-7120 Vejle, DK
(74) Gregersen, Niels Henrik, et al, Patrade A/S, Fredens Torv 3A, 8000 Aarhus C, DK

(51) (8) **EP 2294557 ***
G 07C 5/08
G 07C 9/00
(30) DE 04.06.2008. 102008026675
DE 14.08.2008. 102008037717
(86) PCT/EP2009056904 04.06.2009.
(96) EP 09757606.0 04.06.2009. De
(87) WO2009147225 10.12.2009. 200950
(97) EP 2294557 16.03.2011. 201111 De
(54) MOBILE IDENTIFICATION TRANSMITTER OF A SECURITY SYSTEM
(71) Huf Hülsbeck & Fürst GmbH & Co. KG, Steeger Strasse 17, 42551 Velbert, DE
(72) SIMON, Jörg, Chemnitzerstrasse 10, 42489 Wülfrath, DE;
SCHUMACHER, Helmut, Bahnhofsallee 5, 48653 Coesfeld, DE
(74) Patentanwälte Bals & Vogel, Patentanwälte, Universitätsstrasse 142, 44799 Bochum, DE

(51) (8) **EP 2230646**
G 07D 3/12
(30) IT 17.03.2009. BO20090157
(96) EP 10156565.3 15.03.2010. En
(97) EP 2230646 22.09.2010. 201038 En
(54) Coin dispenser device
(71) Alberici S.p.A., Via Miglioli, 23, 40024 Castel San Pietro Terme, (BO), IT
(72) Alberici, Fabrizio, AGAZZANI & ASSOCIATI S.R.L., Viale Terme 2200/28, I-40024, Castel San Pietro Terme (BO), IT
(74) Negrini, Elena, Agazzani & Associati S.r.l., Studio Ing. Giampaolo Agazzani, Via dell'Angelo Custode 11/6, 40141 Bologna, IT

(51) (8) **EP 2297713 ***
G 07F 17/20
(30) GR 16.05.2008. 20080100328
(86) PCT/GR2009000030 18.05.2009.
(96) EP 09746122.2 18.05.2009. En
(87) WO2009138807 19.11.2009. 200947
(97) EP 2297713 23.03.2011. 201112 En
(54) AUTOMATIC COIN - OPERATED OR ELECTRONIC CARD - OPERATED WASHING MACHINE AND DRYER FOR HELMETS
(71) Bilias, Loannis, Titanon str. 4, 16622 Varkiza, GR
(72) Bilias, Loannis, Titanon str. 4, 16622 Varkiza, GR
(74) Sakellarides, Vasiliki-Vali, Sakellarides Law Office, 70, Adrianou Street, 105 56 Athens, GR

(51) (8) **EP 2110806**
G 09G 3/32
G 09F 13/00
(30) SI 30.01.2008. 200800019
(96) EP 09468001.4 23.01.2009. Sl
(97) EP 2110806 21.10.2009. 200943 En
(54) Earmarked display with intelligent light points
(71) Kapus, Jaro, Na Vrtaci 14, 4248 Lesce, SI
(72) Kapus, Jaro, Na Vrtaci 14, 4248 Lesce, SI
(74) Pipan, Marjan, Kotnikova ulica 5, 1000 Ljubljana, SI

(51) (8) **EP 2237253**
G 09G 3/32
(96) EP 09157123.2 01.04.2009. En
(97) EP 2237253 06.10.2010. 201040 En
(54) Pixel circuit, display using the same and driving method for the same
(71) ARISTOTLE UNIVERSITY OF THESSALONIKI-, Research Committee, Panepistimioupoli, University Campus, 54124 Thessaloniki, GR;
Siskos, Stylianos, Aristotle University of Thessaloniki, Panepistimioupoli, Physics Dept., 54124 Thessaloniki, GR;
Dimitriadis, Charalampos, Aristotle University of Thessaloniki, Panepistimioupoli, Physics Dept., 54124 Thessaloniki, GR;
Pappas, IIias, Aristotle University of Thessaloniki, Panepistimioupoli, Physics Dept., 54124 Thessaloniki, GR
(72) Siskos, Stylianos, Aristotle University of Thessaloniki, Panepistimioupoli, Physics Dept., 54124, Thessaloniki, GR;
Pappas, Ilias, Aristotle University of Thessaloniki, Panepistimioupoli, Physics Dept., 54124, Thessaloniki, GR;
Dimitriadis, Charalampos, Aristotle University of Thessaloniki, Panepistimioupoli, Physics Dept., 54124, Thessaloniki, GR
(74) Petsis, Christos, Attorney at Law, Kyparissias 4-6, 54249 Thessaloniki, GR

(51) (8) **EP 2122840 ***
G 09G 3/34
H 05B 33/08
H 05B 37/02
(30) US 05.01.2007. 650014
US 28.06.2007. 770614
(86) PCT/US2007026141 20.12.2007.
(96) EP 07863192.6 20.12.2007. En
(87) WO2008085402 17.07.2008. 200829
(97) EP 2122840 25.11.2009. 200948 En
(54) BACKLIGHT AND AMBIENT LIGHT SENSOR SYSTEM
(71) APPLE INC., 1 Infinite Loop, Cupertino, CA 95014, US
(72) FORSTALL, Scott, 329 Martens Avenue, Mountain View, CA 94040, US;
HERZ, Scott, M., 1229 Clark Way, San Jose, CA 95125, US;
COFFMAN, Patrick, L., 5023 Diamond Heights Blvd., San Francisco, CA 94131, US;
YEPEZ, Roberto, G., 888, Elizabeth Street, San Francisco, CA 94114, US
(74) Barton, Russell Glen, et al, Withers & Rogers LLP, Goldings House, 2 Hays Lane, London, SE1 2HW, GB

(51) (8) **EP 2319036 ***
G 10K 15/04
(30) CH 04.09.2008. 14132008
(86) PCT/CH2009000294 01.09.2009.
(96) EP 09775781.9 01.09.2009. De
(87) WO2010025574 11.03.2010. 201010
(97) EP 2319036 11.05.2011. 201119 De
(54) APPARATUS AND METHOD FOR PRODUCING EXPLOSIONS
(71) Explo Engineerting GmbH, Rebhaldenstrasse 3, 5622 Waltenschwill, CH
(72) RÜEGG, Hans, Rebhaldenstrasse 3, CH-5622 Waltenschwil, CH
(74) Frei Patent Attorneys, Frei Patentanwaltsbüro AG, Postfach 1771, 8032 Zürich, CH

(51) (8) **EP 2272399**
G 11B 33/04
B 65D 85/58
A 47B 81/06
(30) RU 08.08.2008. 2008134273
(86) PCT/RU2009000371 27.07.2009.
(96) EP 09806908.1 27.07.2009. Ru
(87) WO2010019075 18.02.2010. 201007
(97) EP 2272399 12.01.2011. 201102 De
(54) DEVICE FOR STORING COMPACT DISCS
(71) Kosenko, Mikhail Yurievich, Ul. Mira, 53, Podstepki, Stavropolsky raion, Samarskaya obl. 445143, RU;
Karpovich, Valdimir Longinovich, ul. Radio, 10-87, Moscow 105005, RU
(72) KOSENKO, Mikhail Yurievich, Ul. Mira, 53 Podstepki Stavropolsky raion, Samarskaya obl. 445143, RU
(74) Jeck, Anton, Jeck - Fleck - Herrmann, Klingengasse 2/1, 71657 Vaihingen/Enz, DE

(51) (8) **EP 2133883**
G 12B 21/02
(30) US 11.06.2008. 60781 P
(96) EP 09075263.5 11.06.2009. En
(97) EP 2133883 16.12.2009. 200951 En
(54) Method for cost-efficient manufacturing diamond tips for ultra-high resolution electrical measurements and devices obtained thereof
(71) IMEC, Kapeldreef 75, 3001 Leuven, BE
(72) Hantschel, Thomas, IMEC vzw, BD - Patent Department, Kapeldreef 75, 3001 Leuven, BE;
Vandervorst, Wilfried, Stuivenbergbaan 106, 2800 Mechelen, BE;
Arstila, Kai, Oudebaan 75, 3360 Korbeek-Lo, BE

(51) (8) **EP 2297747 ***
H 01B 1/12
C 08J 3/28
C 08L 57/00
G 02F 1/133
G 02F 1/1343
(30) US 21.06.2008. 74618 P
US 21.06.2008. 74621 P
US 22.06.2008. 74653 P
US 22.06.2008. 74654 P
US 14.07.2008. 80404 P
US 31.12.2008. 142186 P
(86) PCT/IB2009052658 21.06.2009.
(96) EP 09766301.7 21.06.2009. En
(87) WO2009153764 23.12.2009. 200952
(97) EP 2297747 23.03.2011. 201112 En
(54) ELECTRO-OPTICAL DEVICES USING DYNAMIC RECONFIGURATION OF EFFECTIVE ELECTRODE STRUCTURES
(71) Lensvector Inc., 2307 Leghorn St., Mountain View, California 94043, US
(72) GALSTIAN, Tigran, 1007 Ave Myrand, Quebec, Québec G1V 2W1, CA;
PRESNIAKOV, Vladimir, 975 av. Joffre, app.4, Quebec, Québec G1S 3M1, CA;

ASATRYAN, Karen, 833 rue Laudance, App. 305, Quebec, Québec G1X 5J2, CA;
TORK, Amir, 2526 Carre de Bayonne, Quebec, Québec G1V 1J4, CA;
ZOHRABYAN, Armen, 891 Rue Philippe-Methe, Quebec, Québec G1X 2P1, CA;
BAGRAMYAN, Aram, 2585 Carré Pijart, Québec, Québec G1V 1H9, CA
(74) Grünecker, Kinkeldey, Stockmair & Schwanhäusser, Anwaltssozietät, Leopoldstrasse 4, 80802 München, DE

(51) (8) **EP 2313895 ***
H 01F 1/147
(30) EP 22.01.2008. 08290057
(86) PCT/FR2009000039 14.01.2009.
(96) EP 09720281.6 14.01.2009. Fr
(87) WO2009112672 17.09.2009. 200938
(97) EP 2313895 27.04.2011. 201117 Fr
(54) FE-CO ALLOY FOR HIGH DYNAMIC ELECTROMAGNETIC ACTUATOR
(71) ArcelorMittal - Stainless & Nickel Alloys, 1-5, rue Luigi Cherubini, 93200 Saint Denis, FR
(72) WAECKERLE, Thierry, 123 rue de Parigny, F-58000 Nevers, FR;
FRAISSE, Hervé, Le Cholet, F-58000 Saint-Eloi, FR
(74) Plaisant, Sophie Marie, ARCELOR France, Arcelor Research Intellectual Property, 5 Rue Luigi Cherubini, 93212 La Plaine Saint-Denis Cedex, FR

(51) (8) **EP 2166562**
H 01L 21/02
H 01L 21/8242
C 23C 16/40
H 01L 21/314
H 01L 21/316
C 23C 16/455
(30) US 22.09.2008. 99001 P
(96) EP 09075435.9 22.09.2009. En
(97) EP 2166562 24.03.2010. 201012 En
(54) Method for forming a capacitor having a strontium/barium titanium oxide dielectric layer by means of ALD and memory device comprising such a capacitor
(71) IMEC, Kapeldreef 75, 3001 Leuven, BE
(72) Kittl, Jorge, Avenue d'lena 20, 1410 Waterloo, BE;
Popovici, Mihaela Ioana, Justus Lipsiusstraat 28, apt. 0212, 3000 Leuven, BE;
Menou, Nicolas, Sint-Martinusstraat 6, 2260 Westerlo, BE;
Wouters, Dirk, Burg. Frans Cnopslaan 2, 3001 Leuven, BE

(51) (8) **EP 2319070 ***
H 01L 21/306
H 01L 21/314
H 01L 33/00
C 30B 33/00
(30) US 30.07.2008. 182475
(86) PCT/US2009052030 29.07.2009.
(96) EP 09790902.2 29.07.2009. En
(87) WO2010014657 04.02.2010. 201005
(97) EP 2319070 11.05.2011. 201119 En
(54) PASSIVATION OF ALUMINUM NITRIDE SUBSTRATES
(71) North Carolina State University, 920 Main Campus Drive, Suite 400, Raleigh, North Carolina 27604, US
(72) COLLAZO, Ramon, R., 2373 Sapphire Valley Drive, Raleigh, NC 27604, US;
SITAR, Zlatko, 3001 Greyhawk Place, Apex, NC 27539, US;
DALMAU, Rafael, 2028 Summer Shire Way, Raleigh, NC 27604, US
(74) Noel, Chantal Odile, et al, Cabinet Ors, 36, rue de St Pétersbourg, 75008 Paris, FR

(51) (8) **EP 2319079 ***
H 01L 25/00
(30) US 01.08.2008. 137679
(86) PCT/US2008012877 18.11.2008.
(96) EP 08876681.1 18.11.2008. En
(87) WO2010014073 04.02.2010. 201005
(97) EP 2319079 11.05.2011. 201119 En
(54) SYSTEM AND METHOD FOR UTILITY POLE DISTRIBUTED SOLAR POWER GENERATION
(71) Petra Solar Inc., 300-G Corporate Court, South Plainfield, NJ 07080, US
(72) KURAN, Shihab, 507 Cardinal Lane, Green Brook, NJ 08812, US
(74) Boesen, Johnny Peder, Zacco Denmark A/S, Hans Bekkevolds Allé 7, 2900 Hellerup, DK

(51) (8) **EP 2278627**
H 01L 31/042
(30) FR 23.07.2009. 0955144
(96) EP 10170653.9 23.07.2010. Fr
(97) EP 2278627 26.01.2011. 201104 Fr
(54) Automatic localisation of photovoltaic modules in a photovoltaic field
(71) Photowatt International S.A., 33, rue Saint Honoré, ZI Champfleuri, 38300 Bourgoin-Jallieu, FR
(72) Allandrieu, Frantz, 10 chemin de la Tour - Pollet, 01800 Saint Maurice de Gourdans, FR;
Aurousseau, Valery, 50 rue des Capucines, 38110 St Clair de la Tour, FR;
Dumas, Philippe, 183 route des Vignes, 38890 Saint Chef, FR
(74) Maureau, Philippe, et al, Cabinet Germain & Maureau, 12, rue Boileau, B.P. 6153, 69466 Lyon Cedex 06, FR

(51) (8) **EP 2319096 ***
H 01L 33/00
(30) US 07.08.2008. 188201
(86) PCT/US2009053219 07.08.2009.
(96) EP 09805634.4 07.08.2009. En
(87) WO2010017522 11.02.2010. 201006
(97) EP 2319096 11.05.2011. 201119 En
(54) LED MODULE
(71) MAG Instrument, Inc., 2001 South Hellmann Avenue, Ontario, CA 91761, US
(72) MAGLICA, Anthony, 2001 South Hellman Avenue, Ontario, CA 91761, US;
WEST, Stacey, H., 40419 Amesbury Lane, Temecula, CA 92591, US;
RADLOFF, Robert, P., 2383 Avenida Del Vista, Corona, CA 92882, US
(74) Zeller, Andreas, Jones Day, Rechtsanwälte Attorneys-at-Law Patentanwälte, Prinzregentenstrasse 11, 80538 München, DE

(51) (8) **EP 2321859** *
H 01L 35/00
H 02J 7/00
(30) NO 01.08.2008. 20083371
(86) PCT/EP2009059725 28.07.2009.
(96) EP 09781174.9 28.07.2009. En
(87) WO2010012718 04.02.2010. 201005
(97) EP 2321859 18.05.2011. 201120 En
(54) BATTERY CHARGER AND POWER SUPPLY
(71) Therm-Tech AS, Straumsnesveien 89, 8517 Narvik, NO
(72) BIRKELAND, Bjørn Erik, Straumsnesveien 89, N-8517 Narvik, NO;
SZGHUS, Finn Erik, Fagerjordveien 219, N-8517 Narvik, NO;
ROSNESS, Erik, Leangveien 52, N-1387 Asker, NO
(74) Plougmann & Vingtoft A/S, Sundkrogsgade 9, P.O. Box 831, 2100 CopenhagenØ, DK

(51) (8) **EP 2306538**
H 01L 41/047
G 06F 3/01
(96) EP 09171992.2 01.10.2009. En
(97) EP 2306538 06.04.2011. 201114 En
(54) Piezoelectric assembly
(71) RESEARCH IN MOTION LIMITED, 295 Phillip Street, Waterloo, Ontario N2L 3W8, CA
(72) Steeves, Cameron Russell, 75791-305 Phillip Street, Waterloo Ontario N2L 3W8, CA;
Paleczny, Todd Robert, 71450-440 Phillip Street, Waterloo Ontario N2L 5R9, CA;
Weber, Arnett Ryan, 77717-440 Phillip Street, Waterloo Ontario N2L 5R9, CA
(74) MERH-IP, Matias Erny Reichl Hoffmann, Paul-Heyse-Strasse 29, 80336 München, DE

(51) (8) **EP 2313943** *
H 01Q 1/14
(30) DE 16.07.2008. 102008033430
(86) PCT/EP2009004286 15.06.2009.
(96) EP 09776729.7 15.06.2009. De
(87) WO2010006673 21.01.2010. 201003
(97) EP 2313943 27.04.2011. 201117 De
(54) DISTRIBUTOR CONNECTION MODULE FOR TELECOMMUNICATIONS AND DATA TECHNOLOGY
(71) ADC GmbH, Beeskowdamm 3-11, 14167 Berlin, DE
(72) NEUMETZLER, Heiko, Weitzgründer Str. 9, 12623 Berlin, DE

(51) (8) **EP 2230724**
H 01R 4/48
H 01R 13/24
H 01R 12/22
(30) DE 19.03.2009. 102009013982
(96) EP 10002092.4 02.03.2010. De
(97) EP 2230724 22.09.2010. 201038 De
(54) Contact with optimised tension
(71) Amphenol-Tuchel Electronics GmbH, August-Häusser-Strasse 10, 74080 Heilbronn, DE
(72) Braun, Gerhard, Töpferweg 19, 74626 Bretzfeld-Bitzfeld, DE

(51) (8) **EP 2308137** *
H 01R 13/11
H 01R 11/28
(86) PCT/FR2008051423 29.07.2008.
(96) EP 08875640.8 29.07.2008. Fr
(87) WO2010012872 04.02.2010. 201005
(97) EP 2308137 13.04.2011. 201115 Fr
(54) FEMALE, MALE ELECTRIC CONNECTOR AND ELECTRIC CONNECTION USING SUCH A FEMALE AND/OR MALE ELECTRIC CONNECTOR
(71) Saint-Gobain Glass France, 18 Avenue d'Alsace, 92400 Courbevoie, FR
(72) LAMOUREUX, Laurent, 148 rue de la Gaillarderie, F-60170 Ribecourt Dreslincourt, FR;
JAMET, Vincent, Saint-gobain Recherche, 39 quai Lucien Lefranc, F-93300 Aubervilliers, FR
(74) Jamet, Vincent, Saint-Gobain Recherche, Département Propriété Industrielle, 39 Quai Lucien Lefranc, 93300 Aubervilliers, FR

(51) (8) **EP 2237378**
H 01R 13/24
H 01R 13/33
H 01R 43/16
H 01R 12/04
H 01R 12/22
(30) DE 03.04.2009. 102009016160
(96) EP 10002975.0 20.03.2010. De
(97) EP 2237378 06.10.2010. 201040 De
(54) Contact device
(71) Amphenol-Tuchel Electronics GmbH, August-Häusser-Strasse 10, 74080 Heilbronn, DE
(72) Kuntz, Julio, Brunnensteige 14, 74861 Neudenau, DE;
Stolz, Joachim, Elser-Ring 5, 74354 Besigheim, DE

(51) (8) **EP 2308144** *
H 01T 4/06
(30) AT 25.07.2008. 11622008
(86) PCT/AT2009000261 02.07.2009.
(96) EP 09775552.4 02.07.2009. De
(87) WO2010009485 28.01.2010. 201004
(97) EP 2308144 13.04.2011. 201115 De
(54) SURGE ARRESTER
(71) Eaton GmbH, Eugenia 1, 3943 Schrems, AT
(72) GÖSCHL, Thomas, Stölzles 20, A-3942 Hirschbach, AT
(74) Gibler & Poth Patentanwälte OG, Dorotheergasse 7/14, 1010 Wien, AT

(51) (8) **EP 2316154** *
H 02B 1/38
E 05D 11/00
(30) DE 21.08.2008. 102008039080
(86) PCT/EP2009005353 23.07.2009.
(96) EP 09777394.9 23.07.2009. De
(87) WO2010020325 25.02.2010. 201008
(97) EP 2316154 04.05.2011. 201118 De
(54) HOUSING HAVING A BURGLAR-PROOF DOOR HINGE
(71) ADC GmbH, Beeskowdamm 3-11, 14167 Berlin, DE
(72) DELAKOWITZ, Bernd, Siedlung Weinbergshöhe, Rebenweg 2, 13593 Berlin, DE

(51) (8) **EP 2132843** *
H 02B 1/50
(30) DE 13.03.2007. 102007012079
(86) PCT/EP2008002415 13.03.2008.
(96) EP 08734806.6 13.03.2008. De
(87) WO2008110391 18.09.2008. 200838

(97) EP 2132843 16.12.2009. 200951 De
(54) DISTRIBUTION CABINET COMPRISING A PLURALITY OF INNER BODIES
(71) ADC GmbH, Beeskowdamm 3-11, 14167 Berlin, DE; Berthold Sichert GmbH, Kitzingstrasse 5, 12277 Berlin, DE
(72) PERSCHON, Helmut, Lichtenrader Damm 165, 12305 Berlin, DE;
IRMER, Günter, Liebenwalder Strasse 8, 13055 Berlin, DE
(74) Patentanwälte Bressel und Partner, Park Kolonnaden, Potsdamer Platz 10, 10785 Berlin, DE

(51) (8) **EP 2297834 ***
H 02J 7/00
H 02J 3/00
H 02J 13/00
(30) IT 27.05.2008. MC20080094
(86) PCT/EP2009003646 22.05.2009.
(96) EP 09753646.0 22.05.2009. En
(87) WO2009143991 03.12.2009. 200949
(97) EP 2297834 23.03.2011. 201112 En
(54) SYNERGISTIC SYSTEM BETWEEN BATTERY CHARGER AND BATTERY
(71) Faam S.p.a., Via Monti 13, 63026 Monterubbiano (AP), IT
(72) VITALI, Federico, Via Porta Marina 42, 63026 Monterubbiano (AP), IT
(74) Statti, Francesco, Isea S.R.L., Via G. Carducci, 6, I-62012 Civitanova Marche, IT

(51) (8) **EP 2313969 ***
H 03B 28/00
G 06F 1/02
(30) US 10.07.2008. 79670 P
(86) PCT/US2009050114 09.07.2009.
(96) EP 09790225.8 09.07.2009. En
(87) WO2010006175 14.01.2010. 201002
(97) EP 2313969 27.04.2011. 201117 En
(54) HIGHLY PRECISE AND LOW LEVEL SIGNAL-GENERATING DRIVERS, SYSTEMS AND METHODS OF USE
(71) Applied Magnetics, LLC, 7852 S. Elati 202, Littleton, Colorado 80120, US
(72) VON OHLSEN, Jon, 3235 W. 22nd Avenue, Denver, Colorado 80211, US;
SCHOONOVER, Dale, 468 Carmen, Louisville, Colorado 80027, US;
BRASWELL, JR., Allen, 1 Barrington Drive, Littleton, Colorado 80127, US
(74) Phillips & Leigh, 5 Pemberton Row, London EC4A 3BA, GB

(51) (8) **EP 2321925 ***
H 04L 5/00
(30) US 25.08.2008. 91615 P
(86) PCT/US2009054849 25.08.2009.
(96) EP 09791872.6 25.08.2009. En
(87) WO2010027768 11.03.2010. 201010
(97) EP 2321925 18.05.2011. 201120 En
(54) TRANSMIT PSD CEILING IN PACKET-BASED OFDM SYSTEMS
(71) Aware, Inc., 40 Middlesex Turnpike, Bedford, MA 01730-1432, US
(72) KIM, Joon, Bae, 14 Pine Knoll Road, Lexington, MA 02420, US;
TZANNES, Marcos, T., 121 La Espiral, Orinda, CA 94563, US;
HELLER, Peter, Niels, 30 Wallace Street, Somerville, MA 02144, US;
SANDBERG, Stuart, 8 Stacy's Way, Acton, MA 01720, US
(74) Gesthuysen, von Rohr & Eggert, Patentanwälte, Huyssenallee 100, 45128 Essen, DE

(51) (8) **EP 2200228**
H 04L 12/56
(96) EP 08106028.7 22.12.2008. En
(97) EP 2200228 23.06.2010. 201025 En
(54) Method and system for forwarding of data packets
(71) Nokia Siemens Networks Oy, Karaportti 3, 02610 Espoo, FI
(72) Rogasch, Volker, Finkenweg 15, 17493, Greifswald, DE
(74) Bruglachner, Thomas E., Nokia Siemens Networks Oy, COO RTP IPR / Patent Administration, 80240 Munich, DE

(51) (8) **EP 1986392**
H 04L 29/06
(96) EP 07300997.9 26.04.2007. En
(97) EP 1986392 29.10.2008. 200844 En
(54) Method for route optimization between mobile entities
(71) Motorola Solutions, Inc., 1303 East Algonquin Road, Schaumburg IL 60196, US
(72) Janneteau, Christophe, 12, rue Eugne Delacroix, 78390 Bois d'Arcy, FR;
Pandey, Aparna, 1150 N. Lake Shore DR., Chicago, Illinois 60611, US;
Popovich, George, 347 S Kensington Ct, Palatine, Illinois 60067, US
(74) Jepsen, René Pihl, et al, Eltima Consulting, Grove House, Lutyens Close, Chineham Court, Basingstoke, Hampshire RG24 8AG, GB

(51) (8) **EP 2116022 ***
H 04M 1/725
H 04M 3/533
(30) US 07.01.2007. 620721
(86) PCT/US2008000043 02.01.2008.
(96) EP 08705454.0 02.01.2008. En
(87) WO2008085834 17.07.2008. 200829
(97) EP 2116022 11.11.2009. 200946 En
(54) VOICEMAIL SYSTEMS AND METHODS
(71) APPLE INC., 1 Infinite Loop, Cupertino, CA 95014, US
(72) NOVICK, Gregory, 1578 Vista Club Cir. 104, Santa Clara, CA 95054, US;
LAMIRAUX, Henri, 16 Sorrel Lane, San Carlos, CA 94070, US;
WYLD, Jeremy, 1193 Prosper Avenue, San Jose, CA 95118, US;
BUSH, Jeffrey, 3283 Lindenoaks Drive, San Jose, CA 95117, US
(74) Gillard, Matthew Paul, et al, Withers & Rogers LLP, Goldings House, 2 Hays Lane, London, SE1 2HW, GB

(51) (8) **EP 2116023 ***
H 04M 1/725
H 04M 3/533
(30) US 07.01.2007. 650880
(86) PCT/US2008000045 02.01.2008.

(96) EP 08705456.5 02.01.2008. En
(87) WO2008085835 17.07.2008. 200829
(97) EP 2116023 11.11.2009. 200946 En
(54) VOICEMAIL SYSTEMS AND METHODS
(71) APPLE INC., 1 Infinite Loop, Cupertino, CA 95014, US
(72) NOVICK, Gregory, 1578 Vista Club Cir 104, Santa Clara, CA 95054, US;
ANZURES, Freddy, Allen, 555 Pierces Street No. 102, San Francisco, CA 94117, US;
LAMIRAUX, Henri, 16 Sorrel Lane, San Carlos, CA 94070, US
(74) Gillard, Matthew Paul, et al, Withers & Rogers LLP, Goldings House, 2 Hays Lane, London, SE1 2HW, GB

(51) (8) **EP 2119210 ***
H 04M 3/537
H 04M 1/247
H 04M 1/65
(30) US 07.01.2007. 620725
(86) PCT/US2008000059 03.01.2008.
(96) EP 08705470.6 03.01.2008. En
(87) WO2008085847 17.07.2008. 200829
(97) EP 2119210 18.11.2009. 200947 En
(54) VOICEMAIL SYSTEMS AND METHODS
(71) APPLE INC., 1 Infinite Loop, Cupertino, CA 95014, US
(72) NOVICK, Gregory, 1578 Vista Club Cir. 104, Santa Clara, CA 95054, US;
ANZURES, Freddy, Allen, 555 Pierce Street, No. 102, San Francisco, CA 94117, US;
LAMIRAUX, Henri, 16 Sorrel Lane, San Carlos, CA 94070, US
(74) Gillard, Matthew Paul, et al, Withers & Rogers LLP, Goldings House, 2 Hays Lane, London, SE1 2HW, GB

(51) (8) **EP 2294831 ***
H 04Q 1/14
(30) IT 30.04.2008. RM20080229
(86) PCT/IT2009000191 29.04.2009.
(96) EP 09738583.5 29.04.2009. It
(87) WO2009133583 05.11.2009. 200945
(97) EP 2294831 16.03.2011. 201111 En
(54) IMPROVEMENTS TO AN ACTUATOR MODULE DESIGNED FOR INTERCEPTING THE PAIRS OF METAL TELEPHONE CONDUCTORS ALREADY TERMINATED IN TELEPHONE EXCHANGES
(71) Auxitel Spa, Via XXV Aprile 17, 88900 Crotone, IT
(72) MURA, Silvano, Via Merulana 48, I-00185 Roma, IT
(74) Sarpi, Maurizio, et al, Studio Ferrario S.r.l., Via Collina, 36, 00187 Roma, IT

(51) (8) **EP 1968339**
H 04Q 7/38
(30) US 07.03.2007. 683265
(96) EP 07106759.9 23.04.2007. En
(97) EP 1968339 10.09.2008. 200837 En
(54) Apparatus and associated method for facilitating I-WLAN selection
(71) RESEARCH IN MOTION LIMITED, 295 Phillip Street, Waterloo, Ontario N2L 3W8, CA
(72) Buckley, Adrian, 413 Montclair Lane, Tracy, CA 95376, US
(74) Roberts, Gwilym Vaughan, Kilburn & Strode LLP, 20 Red Lion Street, London WC1R 4PJ, GB

(51) (8) **EP 2299730**
H 04R 1/10
(30) WO 09.07.2008. PCT/JP2008/062377
(86) PCT/JP2009062485 09.07.2009.
(96) EP 09794483.9 09.07.2009. Ja
(87) WO2010005039 14.01.2010. 201002
(97) EP 2299730 23.03.2011. 201112 En
(54) EARPHONE
(71) Pioneer Corporation, 1-1, Shin-ogura, Saiwai-ku, Kawasaki-shi, Kanagawa 212-0031, JP;
Tohoku Pioneer Corporation, 1105, Aza-Nikko, Oaza-Kunomoto, Tendo-shi, Yamagata 994-8585, JP
(72) NIHEI Oriaki, c/o Tohoku Pioneer Corporation, 1105 Aza-Nikko, Oaza-Kunomoto, Tendo-shi, Yamagata 994-8585, JP;
ARASAWA Tetsuya, c/o Tohoku Pioneer Corporation, 1105 Aza-Nikko, Oaza-Kunomoto, Tendo-shi, Yamagata 994-8585, JP;
IIJIMA Takekazu, c/o Pioneer Corporation, 4-1 Meguro 1-chome, Meguro-ku, Tokyo 153-8654, JP;
KOMAGAMINE Masanori, c/o Pioneer Corporation, 4-1 Meguro 1-chome, Meguro-ku, Tokyo 153-8654, JP
(74) Hess, Peter K. G., Bardehle Pagenberg, Galileiplatz 1, 81679 München, DE

(51) (8) **EP 2302949**
H 04R 9/02
H 04R 9/00
H 04R 9/04
(86) PCT/JP2008062513 10.07.2008.
(96) EP 08791061.8 10.07.2008. Ja
(87) WO2010004641 14.01.2010. 201002
(97) EP 2302949 30.03.2011. 201113 En
(54) SPEAKER DEVICE
(71) Pioneer Corporation, 1-1, Shin-ogura, Saiwai-ku, Kawasaki-shi, Kanagawa 212-0031, JP;
Tohoku Pioneer Corporation, 1105, Aza-Nikko, Oaza-Kunomoto, Tendo-shi, Yamagata 994-8585, JP
(72) YUZE, Kazuki, c/o Tohoku Pioneer Corporation, 1105 Aza-Nikko, Oaza-Kunomoto, Tendo-shi, Yamagata 994-8585, JP;
KOBAYASHI, Hiroyuki, c/o Tohoku Pioneer Corporation, 1105 Aza-Nikko, Oaza-Kunomoto, Tendo-shi, Yamagata 994-8585, JP;
TAKAYAMA, Koji, c/o Tohoku Pioneer Corporation, 1105 Aza-Nikko, Oaza-Kunomoto, Tendo-shi, Yamagata 994-8585, JP;
FURUTO, Akihiko, c/o Tohoku Pioneer Corporation, 1105 Aza-Nikko, Oaza-Kunomoto, Tendo-shi, Yamagata 994-8585, JP;
NIIDERA, Shintaro, c/o Tohoku Pioneer Corporation, 1105 Aza-Nikko, Oaza-Kunomoto, Tendo-shi, Yamagata 994-8585, JP;
HIKICHI, Toshihiro, c/o Tohoku Pioneer Corporation, 1105 Aza-Nikko, Oaza-Kunomoto, Tendo-shi, Yamagata 994-8585, JP
(74) Hess, Peter K. G., Bardehle Pagenberg, Galileiplatz 1, 81679 München, DE

(51) (8) **EP 2321983 ***
H 04W 4/00
(30) US 04.09.2008. 94116 P
(86) PCT/US2009005008 04.09.2009.
(96) EP 09811849.0 04.09.2009. En

(87) WO2010027495 11.03.2010. 201010
(97) EP 2321983 18.05.2011. 201120 En
(54) A SYSTEM AND METHOD FOR IMPLEMENTING MESH NETWORK COMMUNICATIONS USING A MESH NETWORK PROTOCOL
(71) Trilliant Networks, Inc., 1300 Island Drive, Suite 103, Redwood City, CA 94065, US
(72) VEILLETTE, Michel, 109 des Flandres, Waterloo, Québec JOE 2NO, CA
(74) Grubert, Andreas, King & Spalding International LLP, 125 Old Broad Street, GB-London EC2N 1AR, GB

(51) (8) **EP 2301289 ***
H 04W 64/00
G 01S 5/02
(30) DE 20.05.2009. 102009025851
(86) PCT/DE2010075041 15.05.2010.
(96) EP 10747574.1 15.05.2010. De
(87) WO2010133225 25.11.2010. 201047
(97) EP 2301289 30.03.2011. 201113 De
(54) METHOD FOR CHECKING THE LOCATION OF A FEMTOCELL
(71) Deutsche Telekom AG, Friedrich-Ebert-Allee 140, 53113 Bonn, DE
(72) BREITBACH, Markus, An der Siebengebirgsbahn 20, 53227 Bonn, DE;
RÖBKE, Matthias, Klausenburgstr. 55, 50859 Köln., DE
(74) Bucher, Ralf Christian, Patentanwalt Dipl.-Ing., Alte Landstrasse 23, 85521 Ottobrunn, DE

(51) (8) **EP 2302985**
H 05K 1/02
F 21V 19/00
(96) EP 09171433.7 28.09.2009. En
(97) EP 2302985 30.03.2011. 201113 En
(54) LED assembly
(71) Huang, Huan-Chang, 5F, No. 13, Alley 3, Lane 58, Zhenxing Rd., Guishan Township, T'ao yuan, TW
(72) Huang, Huan-Chang, 5F, No. 13, Alley 3, Lane 58, Zhenxing Rd., Guishan Township, T'ao yuan, TW
(74) Chaillot, Genevive, et al, Cabinet Chaillot, 16-20 Avenue de l'Agent Sarre, B.P. 74, 92703 Colombes Cedex, FR

ИНДЕКС ОБЈАВЉЕНИХ ЗАХТЕВА ЗА ПРОШИРЕЊЕ ЕВРОПСКИХ ПРИЈАВА ПАТЕНАТА ПРЕМА БРОЈУ ОБЈАВЕ ЕВРОПСКЕ ПРИЈАВЕ ПАТЕНТА

Број објаве европске пријаве патента	(51)
EP 1770469	***G 05D 23/19***
EP 1783413	***F 16L 25/00***
	F 16L 33/26
EP 1811980*	***A 23L 1/00***
EP 1892346	***E 04B 1/343***
EP 1898197	***G 01M 1/22***
EP 1930366	***C 08J 9/00***
	C 08J 9/232
	C 08K 5/00
	C 08K 5/103
	C 08K 5/12
	C 08L 27/06
EP 1939296	***C 12N 15/52***
	C 12P 13/08
	C 12N 9/16
EP 1953311	***E 05B 3/06***
	E 05B 63/04
	E 05B 15/04
EP 1963034*	***B 21B 1/46***
EP 1968339	***H 04Q 7/38***
EP 1974806	***B 01J 20/04***
	C 02F 1/28
	C 02F 1/56
	C 02F 103/28
	C 02F 103/32
EP 1977762	***A 61K 39/39***
	A 61K 39/395
	A 61K 31/00
	A 61K 38/00
	A 61P 13/12
EP 1980272	***A 61K 47/10***
	A 61K 9/20
EP 1982759	***B 01J 20/04***
	C 02F 1/28
	C 02F 1/56
	C 02F 103/28
	C 02F 103/32
EP 1986392	***H 04L 29/06***
EP 1990478	***E 04D 3/35***
	B 32B 5/22
	B 32B 5/30
	B 32B 7/04
	B 32B 7/12
	B 32B 11/04
	B 32B 11/12
EP 2003037	***B 61C 5/00***
	B 61C 17/04

Број објаве европске пријаве патента	(51)
WO 2009153496	***C 07D 213/64***
	C 07D 213/70
	C 07D 213/74
	C 07D 407/04
	C 07D 213/643
	A 61K 31/44
	A 61K 31/443
	A 61K 31/444
	A 61P 3/10
	A 61P 3/06
WO 2009156472	***F 24D 13/02***
	F 28F 21/04
	E 04C 2/52
WO 2010015919	***F 16G 3/10***
	F 16G 3/08
WO 2010021404	***A 01N 43/50***
	A 01N 25/22
WO 2010022873	***A 61K 8/04***
	A 61K 8/42
	A 61K 8/65
	A 61K 8/73
	A 61Q 19/10
WO 2010025739	***F 23J 15/04***
	F 23J 15/06
	B 01D 47/06
	B 01D 53/78
WO 2010043987	***F 03B 13/24***
	F 03B 13/14
	F 03B 13/16
	F 03B 13/18
EP 2014419	***B 25B 27/10***
EP 2022357	***A 41G 5/00***
EP 2026106	***G 01V 11/00***
EP 2045504	***F 16L 41/02***
	F 16L 47/32
	H 02G 15/013
	H 02G 15/113
	G 02B 6/44
EP 2048418	***F 16K 31/06***
	F 16K 31/56
	F 16K 17/38
	A 62C 35/68
EP 2053190	***E 06B 3/46***
	E 05F 5/00
EP 2057194*	***C 07K 16/28***
	C 07K 14/715
EP 2057298*	***C 22C 38/12***
EP 2059508*	***C 07D 213/60***
	C 07D 241/10
	C 07D 401/04
	A 61K 31/435
	A 61P 9/00
EP 2061468*	***A 61K 31/506***
EP 2061753*	***C 07C 253/34***
	C 07C 255/53
	C 07D 307/87

Број објаве европске пријаве патента	(51)
EP 2061758*	***C 07D 209/34***
	A 61K 31/404
EP 2061772*	***C 07D 239/88***
	C 07D 239/93
	A 61K 31/517
	A 61P 35/04
	A 61P 25/16
	A 61P 25/28
EP 2061906*	***C 12Q 1/68***
EP 2063895*	***A 61K 31/519***
	A 61K 31/565
	A 61K 31/5377
	A 61K 31/337
	A 61K 31/704
	A 61K 31/4745
	A 61K 31/505
	A 61K 31/517
	A 61K 31/395
	A 61P 35/00
EP 2063908*	***A 61K 38/20***
	C 12N 15/00
	A 61P 37/06
EP 2064176*	***C 07C 233/88***
	C 07C 309/66
	C 07F 7/18
EP 2064177*	***C 07C 311/00***
EP 2068819*	***A 61K 8/72***
	A 61K 31/785
	A 61P 3/12
EP 2069324*	***C 07D 401/00***
EP 2069348*	***C 07D 487/04***
	A 61K 31/519
	A 61P 35/00
EP 2069349*	***C 07D 487/04***
	A 61K 31/519
	A 61P 35/00
EP 2069350*	***C 07D 487/04***
	A 61K 31/519
	A 61P 35/00
EP 2069370*	***C 07F 9/02***
EP 2069865*	***G 03B 21/56***
	G 09B 9/30
	G 09B 27/00
	H 04N 9/31
EP 2071917*	***A 61J 1/20***
EP 2073816*	***A 61K 31/69***
	A 61P 29/00
EP 2074108*	***C 07D 309/04***
	C 07D 405/12
	A 61K 31/435
	A 61P 9/00
EP 2077782*	***A 61B 17/70***

Број објаве европске пријаве патента	(51)
EP 2078047*	***C 08G 18/00***
	C 08J 7/04
	C 09D 175/04
	C 08G 18/40
	B 32B 27/08
	B 32B 27/30
	B 32B 27/40
	C 09J 175/04
EP 2079475*	***A 61K 31/7135***
	H 01L 31/048
	H 01L 23/10
EP 2079486*	***A 61K 47/48***
	A 61K 49/00
	A 61K 51/04
	A 61P 9/00
	A 61P 9/10
	A 61P 9/06
	A 61P 35/00
	A 61P 35/02
EP 2079732*	***C 07D 405/04***
	A 61K 31/501
EP 2081962*	***C 07K 16/28***
	C 12N 15/13
	C 12N 5/12
	A 61K 39/395
	A 61P 35/00
EP 2083842*	***A 61K 38/00***
	C 07K 2/00
EP 2084162*	***C 07D 487/04***
	A 61K 31/5025
	A 61K 31/53
	A 61P 35/00
EP 2094262*	***A 61K 31/33***
	A 61K 31/453
	A 61K 9/32
	A 61P 3/10
	A 61P 3/04
	A 61K 31/353
	A 61K 31/34
EP 2099448*	***A 61K 31/33***
	A 61K 31/453
	A 61K 9/32
	A 61P 3/10
	A 61P 3/04
	A 61K 31/353
	A 61K 31/34
EP 2099449*	***A 61K 31/33***
	A 61K 31/453
	A 61K 9/32
	A 61P 3/10
	A 61P 3/04
	A 61K 31/353
	A 61K 31/34
EP 2099759*	***C 07D 215/14***
	C 07D 401/04
	C 07D 413/04
	C 07D 417/04
	A 61K 31/496
	A 61P 31/04
EP 2101570*	***A 01N 33/02***
	A 61K 31/135

Број објаве европске пријаве патента	(51)
EP 2101575*	***A 01N 43/00***
	A 61K 31/33
	A 61K 31/00
	A 61K 31/352
	A 61K 31/366
	A 61P 9/00
	A 61P 9/12
	A 61P 11/00
	A 61P 13/12
EP 2101731*	***A 61K 31/138***
	A 61K 31/35
	A 61K 9/127
	C 07D 309/10
	A 61P 35/00
EP 2101757*	***A 61K 31/33***
	A 61K 31/453
	A 61K 9/32
	A 61P 3/10
	A 61P 3/04
	A 61K 31/353
	A 61K 31/34
EP 2101802*	***A 61K 38/00***
	C 07K 14/705
	C 07K 7/08
EP 2101809*	***A 61K 38/43***
	A 61P 1/16
	A 23L 1/30
EP 2101883*	***A 63B 21/068***
	A 61H 1/00
EP 2109672*	***C 12N 15/55***
	C 12N 9/84
EP 2110806	***G 09G 3/32***
	G 09F 13/00
EP 2111105*	***A 01N 37/18***
	A 61K 38/00
	A 61K 31/785
	A 61K 31/198
	A 61K 38/16
	A 61P 25/28
EP 2111867	***A 61K 38/10***
	A 61P 35/00
EP 2111931	***B 09B 3/00***
	B 01D 1/00
	B 01D 5/00
	B 01D 29/11
	B 01D 53/40
	B 01D 53/77
	B 01D 53/86
	C 02F 1/04
	C 02F 3/02
EP 2112151	***C 07D 473/00***
	C 07D 473/32
	A 61K 31/52
	A 61P 3/00
	A 61P 9/00

Број објаве европске пријаве патента	(51)
EP 2112205	***C 09D 7/02***
	C 09D 7/12
	C 09D 175/04
	C 08G 18/28
	C 08G 18/32
	C 08G 18/48
	C 08G 18/71
	C 08G 18/76
EP 2114144*	***A 01N 27/00***
	A 01N 25/16
	A 01N 25/22
	A 01N 55/10
	A 01P 7/02
	A 01P 7/04
EP 2114153*	***A 01N 43/04***
	A 01N 63/00
	A 01N 65/00
	A 61K 31/70
	A 61K 48/00
	A 61K 39/00
EP 2114431*	***A 61K 38/16***
	A 61P 35/00
EP 2114920*	***C 07D 401/12***
	C 07D 401/14
	C 07D 409/14
	A 61K 31/4725
	A 61P 9/00
EP 2115228*	***E 04B 1/26***
EP 2116022*	***H 04M 1/725***
	H 04M 3/533
EP 2116023*	***H 04M 1/725***
	H 04M 3/533
EP 2116542	***C 07D 407/06***
	A 61K 31/496
	A 61P 35/00
EP 2117329*	***A 23C 9/13***
	A 23C 9/127
	A 23C 9/15
	A 23L 1/20
EP 2118067*	***C 07D 231/40***
	C 07D 401/04
	C 07D 403/04
	C 07D 403/12
	C 07D 403/14
	C 07D 407/04
	C 07D 407/14
	C 07D 409/04
	C 07D 413/12
	C 07D 473/04
	C 07D 487/04
	A 61K 31/4155
	A 61P 25/00
EP 2119210*	***H 04M 3/537***
	H 04M 1/247
	H 04M 1/65

Број објаве европске пријаве патента	(51)
EP 2119706	***C 07D 213/75***
	A 61K 31/4412
	A 61K 31/4427
	A 61K 31/496
	A 61K 31/506
	A 61K 31/5377
	A 61P 35/00
	C 07D 401/12
	C 07D 401/14
	C 07D 403/12
	C 12N 15/09
	C 12Q 1/68
	G 01N 33/15
	G 01N 33/48
	G 01N 33/50
	G 01N 33/53
	G 01N 33/574
EP 2120579*	***A 01N 43/58***
	A 61K 31/50
	A 61K 31/495
	C 07D 237/32
	C 07D 403/10
	C 07D 403/12
	C 07D 403/14
EP 2121297*	***B 30B 11/34***
EP 2121683*	***C 07D 471/04***
	A 61K 31/496
	A 61P 1/14
EP 2121724*	***C 07J 41/00***
EP 2122052*	***D 21H 19/06***
EP 2122513*	***G 06F 17/30***
EP 2122840*	***G 09G 3/34***
	H 05B 33/08
	H 05B 37/02
EP 2124563*	***A 01N 43/50***
	A 61K 31/415
	C 07D 235/06
	C 07D 235/14
	C 07D 235/26
	C 07D 235/12
	C 07D 235/30
	C 07D 401/12
	C 07D 405/12
	A 61P 29/00
EP 2125095*	***A 61M 31/00***
EP 2125715*	***C 07D 205/08***
	A 61K 31/397
	A 61P 3/00
EP 2126650*	***G 01L 3/10***
EP 2127613	***A 61C 8/00***
	A 61C 13/00
EP 2129319*	***A 61C 1/08***
EP 2129359*	***C 07K 14/64***
EP 2129428*	***A 61N 1/00***
EP 2129679*	***C 07F 3/02***
EP 2131707*	***A 47J 37/07***
EP 2132230*	***C 07K 16/42***
	A 61P 37/06
EP 2132843*	***H 02B 1/50***

Број објаве европске пријаве патента	(51)
EP 2133333	***C 07D 209/52***
	A 61K 31/403
	A 61P 25/00
	A 61P 3/04
EP 2133413	***C 12H 1/07***
	C 12H 1/04
	B 01D 35/02
	B 01D 35/16
	B 01D 35/04
EP 2133883	***G 12B 21/02***
EP 2134371*	***A 61K 47/48***
EP 2134680*	***C 07D 207/14***
	A 61K 31/40
	A 61K 31/4025
	A 61K 31/4439
	A 61K 31/5377
	A 61P 35/00
	C 07D 401/04
	C 07D 401/12
	C 07D 405/12
	C 07D 413/12
EP 2135022*	***F 25D 31/00***
	B 67D 1/08
EP 2135177*	***G 06F 3/023***
	G 06F 17/21
	G 06F 17/22
	G 06F 17/27
EP 2135199*	***G 06M 1/04***
	G 06M 1/08
EP 2135507	***A 01N 31/02***
	A 01N 37/36
	A 01N 59/16
	A 01P 3/00
	A 61K 31/045
	A 61K 31/191
	A 61K 31/194
	A 61K 31/315
	A 61L 2/18
	A 61P 31/02
EP 2136809*	***A 61K 31/506***
EP 2137217*	***C 07K 16/28***
EP 2137596*	***G 06F 19/00***
EP 2137620*	***G 06F 11/00***
EP 2140253*	***G 01N 23/04***
	G 06F 3/048
	G 06T 3/40
	G 06T 5/00

Број објаве европске пријаве патента	(51)
EP 2141150	***C 07D 231/56***
	A 61K 31/416
	A 61K 31/428
	A 61K 31/433
	A 61K 31/437
	A 61P 1/04
	A 61P 3/06
	A 61P 3/10
	A 61P 5/00
	A 61P 7/10
	A 61P 7/12
	A 61P 9/00
	A 61P 9/10
	A 61P 9/12
	A 61P 11/08
	A 61P 15/00
	A 61P 15/08
	A 61P 19/10
	A 61P 25/14
	A 61P 25/16
	A 61P 25/18
EP 2163304	***B 01J 27/18***
	B 01J 35/00
EP 2163873	***G 01M 1/00***
EP 2163874	***G 01M 1/00***
EP 2163875	***G 01M 1/02***
EP 2166562	***H 01L 21/02***
	H 01L 21/8242
	C 23C 16/40
	H 01L 21/314
	H 01L 21/316
	C 23C 16/455
EP 2181902	***B 60S 3/06***
EP 2189461	***C 07D 491/22***
	A 61K 31/4375
	A 61P 35/00
EP 2193714	***A 01N 43/56***
EP 2193715	***A 01N 43/56***
EP 2196088	***A 01N 43/56***
EP 2196200	***A 61K 31/122***
	A 61P 25/02
	A 61P 25/04
EP 2199355	***C 09J 7/02***
	C 09J 7/00
	B 65H 37/00
EP 2200228	***H 04L 12/56***
EP 2201839	***A 01N 43/56***
EP 2204093	***A 01N 43/56***
EP 2204494	***E 01B 9/30***
	E 01B 9/48
EP 2204574	***F 02M 55/02***
	F 02M 63/02
EP 2206476	***A 61B 18/14***
EP 2210866	***C 04B 28/14***
	F 24D 3/14
	C 04B 14/00
EP 2213718	***C 11D 17/00***
	E 03D 9/02
EP 2213827	***E 06B 9/382***
	E 06B 9/388
	E 06B 9/323

Број објаве европске пријаве патента	(51)
EP 2213910	***F 16H 61/02***
	B 60W 10/10
	F 16H 47/02
	F 16H 59/44
	F 16H 59/48
	F 16H 59/46
EP 2216363	***C 08K 5/21***
	C 08K 5/053
	C 08L 61/28
	C 08L 61/24
	C 08K 5/3412
	C 08J 5/24
	C 08G 12/38
	C 08G 12/42
EP 2216610	***F 24H 9/20***
	G 01F 23/22
EP 2218321	***A 01D 43/08***
EP 2218367	***A 47J 31/36***
EP 2218439	***A 61K 8/37***
	A 61K 8/92
	A 61Q 1/14
EP 2218440	***A 61K 8/39***
	A 61K 8/60
	A 61Q 19/00
EP 2218497	***B 01J 2/20***
	B 30B 11/20
EP 2218533	***B 23D 59/00***
	B 27B 17/00
EP 2221164	***B 29C 65/02***
	B 29C 65/10
	E 04D 1/36
	E 04D 13/17
	B 29C 65/00
	B 29C 65/74
EP 2221167	***B 29C 70/44***
EP 2221304	***C 07D 413/14***
	C 07D 265/30
	C 07D 265/32
EP 2221305	***C 07D 413/14***
	C 07D 239/26
EP 2221378	***C 12N 15/113***
EP 2221538	***F 23J 15/04***
EP 2221539	***F 23J 15/04***
EP 2223667	***A 61C 8/00***
EP 2223692	***A 61K 31/713***
	C 12N 15/113
EP 2223693	***A 61K 31/713***
	C 12N 15/113
EP 2223694	***A 61K 31/713***
	C 12N 15/113
EP 2223695	***A 61K 31/713***
	C 12N 15/113
EP 2223857	***B 65B 43/14***
	B 65B 43/46
EP 2223883	***B 66F 7/28***
EP 2224004	***C 12N 15/113***
	A 61K 31/713
EP 2224005	***C 12N 15/113***
	A 61K 31/713

Број објаве европске пријаве патента	(51)
EP 2224037	***C 23C 22/53***
	B 05D 7/14
	C 25D 5/48
EP 2224045	***D 01F 9/127***
	D 01F 9/16
	C 01B 31/02
	B 01J 37/08
	B 01J 21/18
EP 2224076	***E 04H 3/12***
EP 2224123	***F 02M 51/00***
	F 02M 51/06
	F 02M 61/16
EP 2225940	***A 01N 47/40***
	A 01N 51/00
	A 01N 43/40
	A 01N 25/00
	A 01N 25/04
	A 01N 25/30
	A 01P 7/04
EP 2227992	***A 47G 9/00***
	A 61N 1/16
EP 2228071	***A 61K 38/18***
	A 61K 48/00
	A 61P 13/12
EP 2228073	***A 61K 39/39***
	A 61K 39/395
EP 2228651	***G 01N 33/50***
	G 01N 33/68
	G 01N 33/569
EP 2229914	***A 61C 13/00***
	A 61C 19/05
	A 61C 9/00
EP 2230181	***B 65B 35/50***
	B 65G 57/03
	B 65B 61/24
EP 2230194	***B 65D 85/04***
	B 65D 5/60
EP 2230223	***C 04B 2/10***
EP 2230245	***C 07K 4/12***
	A 61K 38/03
EP 2230445	***F 21S 8/08***
	F 21V 7/09
EP 2230646	***G 07D 3/12***
EP 2230724	***H 01R 4/48***
	H 01R 13/24
	H 01R 12/22
EP 2232972	***A 01B 33/08***
EP 2233120	***A 61H 3/00***
	A 61H 3/04
EP 2233207	***B 01J 21/18***
	B 01J 23/755
	B 01J 23/881
	B 01J 37/02
	B 01J 37/08
	C 01B 31/00
EP 2233584	***C 12Q 1/68***
EP 2233642	***E 02F 3/36***
	E 02F 9/22
EP 2233807	***F 16K 31/08***
	F 16K 15/02
EP 2236185	***B 01D 35/18***

Број објаве европске пријаве патента	(51)
EP 2236307	***B 41M 5/025***
	B 41M 5/035
	B 41M 5/52
EP 2236519	***C 07K 16/24***
	C 12N 15/13
	A 61K 39/395
EP 2236600	***C 12N 9/16***
	C 12N 15/55
	C 12N 15/11
	C 12P 21/02
	C 12N 1/20
	A 23K 1/165
EP 2236691	***E 04D 13/00***
	G 01M 3/16
EP 2237253	***G 09G 3/32***
EP 2237378	***H 01R 13/24***
	H 01R 13/33
	H 01R 43/16
	H 01R 12/04
	H 01R 12/22
EP 2240027*	***A 01N 43/56***
	A 01P 3/00
	A 01P 7/04
	A 01N 37/38
	A 01N 37/46
	A 01N 37/50
	A 01N 43/36
	A 01N 43/54
	A 01N 43/653
	A 01N 47/02
	A 01N 47/24
	A 01N 47/26
	A 01N 47/34
	A 01N 47/38
EP 2241709	***E 05F 15/14***
	E 05F 17/00
EP 2242366*	***A 01N 43/56***
	A 01P 3/00
	A 01P 7/04
	A 01N 35/04
	A 01N 37/20
	A 01N 37/24
	A 01N 37/36
	A 01N 37/38
	A 01N 37/46
	A 01N 37/50
	A 01N 37/52
	A 01N 41/06
	A 01N 43/30
	A 01N 43/32
	A 01N 43/36
EP 2251453	***C 23C 16/505***
	C 23C 16/458
	G 01N 15/08
	A 61B 5/15
EP 2251573	***F 16K 1/22***
EP 2253857	***F 16B 19/10***
	B 60D 1/60
EP 2259675*	***A 01N 35/04***
	A 01N 43/653
EP 2261453	***E 06B 7/215***

Број објаве европске пријаве патента	(51)
EP 2263476	***A 23L 1/06***
	A 23L 1/212
	A 23L 1/064
	A 23L 1/068
EP 2263676	***A 61K 31/58***
	A 61P 31/12
EP 2263744	***A 61N 1/36***
	A 61N 1/34
EP 2264156	***C 12N 9/16***
	C 12N 15/55
	C 12N 15/11
	C 12P 21/02
	C 12N 1/20
	A 23K 1/165
EP 2265582*	***C 07D 209/34***
	C 07D 401/06
	C 07D 403/06
	A 61K 31/404
EP 2268270*	***A 61K 9/28***
	A 61K 9/48
	A 61K 31/55
EP 2269472	***A 23K 1/16***
	A 23K 1/18
EP 2272399	***G 11B 33/04***
	B 65D 85/58
	A 47B 81/06
EP 2278198	***F 16J 15/32***
	B 29C 43/18
EP 2278627	***H 01L 31/042***
EP 2279652	***A 01B 49/02***
EP 2280702*	***A 61K 31/343***
	A 61P 9/04
EP 2289893	***C 07D 473/00***
	C 07D 473/32
	A 61K 31/52
	A 61P 3/00
	A 61P 9/00
EP 2291453*	***C 08L 61/00***
	C 08L 97/02
	C 08L 91/00
	B 24D 3/28
	C 08L 61/06
	C 08L 101/06
EP 2293680*	***A 23C 19/045***
	A 23C 19/09
EP 2293790*	***A 61K 31/27***
	A 61K 31/445
	A 61K 31/551
	A 61K 45/06
	A 61P 25/28
EP 2293793*	***A 61K 31/437***
	A 61P 21/00
	C 07D 471/04

Број објаве европске пријаве патента	(51)
EP 2293795*	***A 61K 31/496***
	A 61K 31/519
	A 61P 35/00
	A 61P 3/10
	A 61P 17/06
	A 61P 19/02
	A 61P 25/02
	A 61P 9/00
	A 61P 11/06
	A 61P 27/02
	A 61P 1/16
	A 61P 43/00
EP 2293805*	***A 61K 36/185***
	A 61K 36/68
	A 61P 11/00
EP 2293813*	***A 61K 39/29***
EP 2293814*	***A 61K 39/38***
EP 2293818*	***A 61K 47/48***
EP 2293892*	***B 22D 7/12***
	B 22D 30/00
	B 22D 9/00
EP 2293912*	***B 29C 37/02***
	B 29C 71/00
	A 61F 9/00
	A 61F 9/007
	B 24B 9/20
	B 24B 31/00
EP 2293914*	***B 29C 45/00***
	A 61L 31/06
EP 2293990*	***B 65D 43/02***
EP 2294012*	***C 01G 3/00***
EP 2294029*	***C 04B 28/02***
	E 01C 1/00
	E 01C 11/22
EP 2294068*	***C 07D 471/04***
	A 61K 31/437
EP 2294084*	***C 07K 16/10***
	A 61P 31/16
	G 01N 33/569
	G 01N 33/577
EP 2294087*	***C 07K 16/26***
	A 61K 39/395
	A 61K 38/18
	A 61P 7/06
	A 61P 3/12
EP 2294133*	***C 08L 67/02***
EP 2294159*	***C 09K 11/06***
	G 01N 21/64
EP 2294179*	***C 12N 1/13***
	C 07K 16/14
	C 12N 15/63
EP 2294197*	***C 12N 15/12***
	C 07K 14/47
	A 61K 38/17
EP 2294255*	***D 03D 1/00***
	D 03D 11/00
	D 03D 11/02
	D 03D 15/00
	D 03D 15/08
	D 06C 7/02
	D 03D 15/04

Број објаве европске пријаве патента	(51)
EP 2294270*	***E 04H 12/14***
	E 04G 23/02
EP 2294279*	***E 21B 34/14***
	E 21B 33/126
	E 21B 34/10
EP 2294336*	***F 23C 9/00***
EP 2294337*	***F 23Q 3/00***
	F 23D 14/20
	F 24C 3/10
EP 2294375*	***G 01L 1/24***
	G 01L 5/16
EP 2294413*	***G 01N 33/50***
	G 01N 33/15
	C 12Q 1/02
EP 2294556*	***G 07C 5/00***
	G 07C 5/08
EP 2294557*	***G 07C 5/08***
	G 07C 9/00
EP 2294831*	***H 04Q 1/14***
EP 2294994	***A 61B 17/64***
EP 2295050	***A 61K 31/165***
	A 61P 25/24
EP 2295130	***B 01D 53/78***
	B 01D 53/50
EP 2295416	***C 07D 249/12***
	C 07D 401/04
	C 07D 405/04
	C 07D 403/04
	A 61K 31/4196
	A 61P 35/00
EP 2295591	***C 12N 15/861***
	C 12N 15/85
EP 2295872	***F 24D 7/00***
	F 24D 19/10
	F 24H 7/04
EP 2296115	***G 06T 15/00***
EP 2296116	***G 06T 15/00***
EP 2296462*	***A 01N 33/02***
	A 61K 31/135
EP 2296463*	***A 01N 35/02***
	A 01N 37/04
	A 01N 59/00
	A 01P 1/00
	A 01N 35/04
	A 01N 59/08
EP 2296475*	***A 01N 43/64***
	A 61K 31/41
EP 2296480*	***A 01P 13/00***
	A 01N 43/10
	A 01N 43/40
	A 01N 43/56
	A 01N 43/78
	A 01N 43/82
	A 01N 57/14
	A 01N 37/22
	A 01N 37/24
	A 01N 37/26
EP 2296490*	***A 23L 1/00***
	A 23G 4/20
	A 61K 9/28

Број објаве европске пријаве патента	(51)
EP 2296495*	***A 23L 1/29***
	A 23L 1/314
	C 12N 9/10
	A 23K 1/18
	A 23L 1/305
	A 23L 1/317
EP 2296496*	***A 23L 1/29***
	A 23L 1/236
	A 23L 2/00
	A 23L 2/56
	A 23L 2/60
	A 23F 3/00
	A 23F 5/00
EP 2296528*	***A 61B 1/018***
	A 61B 17/29
	A 61B 17/00
	A 61B 17/30
	A 61B 17/34
EP 2296529*	***A 61B 1/018***
EP 2296595*	***A 61F 7/03***
EP 2296612*	***A 61K 8/19***
	A 61K 8/25
	A 61Q 11/00
	A 61P 1/02
	A 61K 6/00
EP 2296632*	***A 61K 9/16***
	A 61P 27/16
	A 61K 38/22
	A 61K 38/48
EP 2296635*	***A 61K 9/50***
	A 61K 9/51
	A 61K 9/16
	A 61K 31/755
	A 61N 1/02
EP 2296636*	***A 61K 9/50***
	A 61K 9/51
	A 61K 31/198
	A 61P 25/28
EP 2296639*	***A 61K 31/01***
	A 61K 31/047
	A 61P 17/02
	A 61P 17/06
EP 2296640*	***A 61K 31/13***
	A 61K 31/4545
	A 61K 31/439
	A 61K 31/506
	A 61K 45/06
	A 61P 27/02
EP 2296650*	***A 61K 31/437***
EP 2296659*	***A 61K 31/4965***
EP 2296663*	***A 61K 31/519***
	A 61K 31/455
	A 61P 35/00
EP 2296690*	***A 61K 38/18***
	C 07K 14/50
EP 2296694*	***A 61K 38/48***
EP 2296858*	***B 29B 17/02***
	D 21B 1/02
EP 2297011*	***B 65G 53/50***

Број објаве европске пријаве патента	(51)
EP 2297034*	***C 01B 33/025***
	C 01B 33/037
	C 30B 13/00
EP 2297035*	***C 01B 33/025***
	C 01B 33/037
	C 30B 13/00
EP 2297050*	***C 02F 9/08***
	C 02F 1/42
	C 02F 103/04
	B 01J 47/04
	C 02F 9/04
	C 02F 103/12
	C 02F 103/34
	C 02F 1/28
	C 02F 1/04
	C 02F 1/52
	C 02F 9/00
EP 2297054*	***C 03B 19/08***
EP 2297072*	***C 07C 4/04***
	C 07C 7/04
	C 07C 11/04
	C 07C 17/02
	C 07C 19/045
EP 2297089*	***C 07C 215/44***
	C 07C 217/52
	C 07C 313/08
	C 07C 213/02
	C 07C 213/08
	A 61K 31/135
	A 61K 31/335
EP 2297095*	***C 07C 323/60***
	C 07C 323/65
EP 2297114*	***C 07D 233/90***
	C 07D 401/12
	C 07D 401/14
	C 07D 407/12
	C 07D 409/06
	C 07D 409/14
	C 07D 413/06
	C 07D 413/14
	C 07D 417/06
	C 07D 417/12
	C 07D 471/04
	C 07D 487/04
	C 07D 487/08
	C 07D 495/04
EP 2297116*	***C 07D 239/84***
	A 61K 31/517
	A 61P 7/02
EP 2297120*	***C 07D 279/06***
	A 61K 31/541
	A 61P 25/28
EP 2297122*	***C 07D 295/185***

Број објаве европске пријаве патента	(51)
EP 2297131*	***C 07D 401/10***
	C 07D 413/10
	C 07D 215/227
	C 07D 417/10
	C 07D 295/02
	C 07D 407/10
	A 61K 31/47
	A 61K 31/4427
	A 61P 3/10
	A 61P 15/00
	A 61P 25/00
EP 2297133*	***C 07D 401/12***
	C 07D 401/14
	C 07D 405/12
	C 07D 413/14
	C 07D 417/14
	A 61K 31/4409
	A 61K 31/5355
	A 61P 25/18
EP 2297142*	***C 07D 413/14***
	C 07D 401/10
	C 07D 401/14
	C 07D 417/14
	A 61K 31/501
	A 61P 9/02
EP 2297144*	***C 07D 471/04***
	C 07D 487/04
	A 61P 3/00
	A 61K 31/437
EP 2297147*	***C 07D 471/08***
	A 61K 31/439
	A 61P 31/04
EP 2297152*	***C 07D 487/04***
	A 61K 31/4985
	A 61P 25/00
EP 2297159*	***C 07D 487/04***
	A 61K 31/5025
	A 61P 7/02
EP 2297167*	***C 07D 517/04***
	A 61K 31/407
	A 61K 31/41
	A 61P 25/18
	A 61P 25/28
	A 61P 25/24
EP 2297177*	***C 07J 53/00***
	A 61K 31/58
	A 61P 5/34
	A 61P 5/42
	A 61P 5/28
EP 2297185*	***C 07K 14/015***
	C 12N 5/10
	C 12N 7/04
	C 12N 15/864
	A 61K 38/16
	A 61K 39/23
	A 61K 48/00
EP 2297189*	***C 07K 14/325***
	C 12N 15/82
EP 2297190*	***C 07K 14/325***
	C 12N 15/82

Број објаве европске пријаве патента	(51)
EP 2297192*	*C 07K 14/415*
	C 12N 15/82
	A 01H 5/00
EP 2297198*	*C 07K 14/705*
EP 2297204*	*C 07K 16/28*
	A 61K 39/395
	A 61P 37/06
EP 2297206*	*C 07K 16/28*
	A 61K 39/395
	A 61P 35/00
EP 2297208*	*C 07K 16/46*
	C 07K 16/20
	C 12P 21/08
EP 2297209*	*C 07K 16/46*
	C 07K 16/20
	C 12P 21/08
EP 2297304*	*C 12N 5/08*
	A 61K 35/28
EP 2297317*	*C 12N 9/68*
	C 12P 21/06
EP 2297334*	*C 12Q 1/37*
	C 07K 14/54
	G 01N 33/68
EP 2297356*	*C 12Q 1/68*
EP 2297411*	*E 04B 1/68*
	E 06B 1/62
EP 2297427*	*E 21B 33/14*
	E 21B 17/00
	E 21B 33/124
	E 21B 34/14
EP 2297451*	*F 03B 3/04*
	F 03B 17/06
EP 2297517*	*F 22B 21/00*
	F 22B 37/04
EP 2297541*	*F 41H 5/02*
EP 2297580*	*G 01N 33/574*
EP 2297584*	*G 01N 33/92*
	C 11C 3/10
EP 2297688*	*G 06Q 30/00*
EP 2297713*	*G 07F 17/20*
EP 2297747*	*H 01B 1/12*
	C 08J 3/28
	C 08L 57/00
	G 02F 1/133
	G 02F 1/1343
EP 2297834*	*H 02J 7/00*
	H 02J 3/00
	H 02J 13/00
EP 2298080	*A 23G 3/52*
	A 23G 1/52
	A 23C 19/076
	A 23G 1/10
	A 23G 3/02
	B 01F 5/04
EP 2298276	*A 61K 9/00*
	A 23L 1/304
	A 23L 2/52
	A 61K 33/06
	A 61K 33/10
	A 61K 33/14
	A 61K 47/12

Број објаве европске пријаве патента	(51)
EP 2298281	*A 61K 9/08*
	A 61K 31/198
	A 61P 25/16
EP 2298297	*A 61K 31/4045*
	A 61K 31/55
	A 61K 45/06
	A 61P 9/12
EP 2298342	*A 61K 39/09*
	C 07K 14/315
	G 01N 33/569
EP 2298730	*C 07C 227/40*
	C 07C 229/34
EP 2298747	*C 07D 249/08*
	A 61K 31/4196
	A 61K 31/42
	A 61K 31/422
	A 61K 31/4245
	A 61K 31/427
	A 61K 31/4439
	A 61K 31/496
	A 61K 31/506
	A 61K 31/5377
	A 61K 31/541
	A 61P 3/04
	A 61P 3/06
	A 61P 3/10
	A 61P 9/12
	A 61P 19/10
	A 61P 25/28
	A 61P 27/06
	A 61P 43/00
	C 07D 401/04
EP 2298748	*C 07D 249/12*
	C 07D 401/04
	C 07D 405/04
	C 07D 403/04
	A 61K 31/4196
	A 61P 35/00
EP 2298755	*C 07D 317/72*
	C 07C 67/31
	C 07C 67/343
	C 07C 69/675
	C 07C 69/738
	C 07C 69/757
	C 12P 7/62
	A 61P 43/00
EP 2298764	*C 07D 413/04*
	C 07D 413/14
	A 61K 31/454
	A 61P 25/00
EP 2298765	*C 07D 413/04*
	C 07D 413/14
	A 61K 31/454
	A 61P 25/00
EP 2298925	*C 12N 15/861*
EP 2299408	*G 06T 15/00*
	G 06T 15/80
EP 2299730	*H 04R 1/10*
EP 2299802*	*A 01G 31/00*
	A 01G 9/10

Број објаве европске пријаве патента	(51)
EP 2299810*	*A 01N 31/00*
	A 61K 31/075
EP 2299812*	*A 01N 37/18*
EP 2299821*	*A 01N 43/42*
EP 2299854*	*A 24D 3/04*
	A 24D 3/14
EP 2299878*	*A 47J 31/00*
	A 47J 31/46
	A 47J 31/36
EP 2299913*	*A 61B 17/04*
	A 61B 17/06
EP 2299951*	*A 61F 6/22*
EP 2299971*	*A 61K 9/00*
	A 61K 31/517
	A 61P 35/00
	A 61K 9/16
	A 61K 9/20
EP 2299976*	*A 61K 9/127*
	A 61K 9/16
	A 61K 47/34
	A 61P 27/16
EP 2299979*	*A 61K 9/16*
	A 61P 31/04
	A 61P 27/16
	A 61K 47/34
	A 61K 9/14
EP 2299983*	*A 61K 9/20*
	A 61K 9/22
	A 61K 9/52
EP 2299987*	*A 61K 9/48*
	A 61K 9/10
	A 61K 47/14
	A 61K 47/24
	A 61K 47/44
	A 61K 31/404
EP 2299992*	*A 61K 31/135*
EP 2299993*	*A 61K 31/135*
EP 2300001*	*A 61K 31/343*
	A 61P 9/06
EP 2300004*	*A 61K 31/415*
	A 61K 31/4155
	A 61K 31/426
	A 61P 25/28
	A 61P 25/16
	A 61P 35/00
EP 2300009*	*A 61K 31/485*
	A 61K 31/765
	A 61P 1/00
	A 61P 25/04
EP 2300023*	*A 61K 35/28*
	A 61K 35/48
	A 61K 35/76
	A 61K 45/06
	C 12N 7/00
	C 12N 15/00
	A 61P 35/00
EP 2300035*	*A 61K 38/00*
EP 2300046*	*A 61K 38/28*
	A 61K 38/47
	A 61P 5/50
	A 61P 3/10

Број објаве европске пријаве патента	(51)
EP 2300052*	***A 61K 39/38***
EP 2300058*	***A 61L 2/00***
	A 61L 9/00
EP 2300098*	***A 61N 1/36***
EP 2300106*	***A 63B 22/08***
	A 61H 23/00
EP 2300194*	***B 23K 26/38***
	A 61B 17/06
EP 2300213*	***B 29C 51/16***
	B 29C 51/10
	B 65D 5/56
	B 29C 51/42
EP 2300311*	***B 63C 5/02***
	E 04G 1/22
EP 2300398*	***C 07C 2/02***
EP 2300419*	***C 07C 279/24***
	B 01J 19/18
EP 2300422*	***C 07D 205/04***
	C 07D 401/12
	C 07D 403/12
	C 07D 401/06
	A 61K 31/397
	A 61K 31/496
	A 61P 25/00
	C 07D 403/14
	C 07D 471/04
	C 07D 487/04
	A 61P 1/00
	A 61P 9/00
	A 61P 11/00
EP 2300423*	***C 07D 209/10***
	C 07D 209/12
	C 07D 209/18
	C 07D 405/06
	C 07D 409/06
	A 61K 31/404
	A 61P 9/00
EP 2300425*	***C 07D 209/88***
	C 07D 209/82
	A 61K 31/403
	A 61P 9/06
EP 2300426*	***C 07D 211/38***
	C 07D 211/46
	C 07D 213/75
	C 07D 295/192
	C 07D 295/096
	A 61K 31/397
	A 61K 31/40
	A 61K 31/435
	A 61K 31/445
	A 61K 31/4453
	A 61K 31/495
	A 61K 31/496
	A 61K 31/5355
	A 61K 31/5375
	A 61K 31/5377

Број објаве европске пријаве патента	(51)
EP 2300428*	***C 07D 213/73***
	C 07D 401/12
	C 07D 401/14
	C 07D 409/12
	C 07D 409/14
	C 07D 413/12
	C 07D 417/12
	A 61K 31/5377
	A 61K 31/44
	A 61K 31/4439
	A 61K 31/4436
	A 61K 31/444
	A 61K 31/4725
	A 61K 31/4709
	A 61P 29/00
EP 2300440*	***C 07D 239/22***
	C 07D 401/04
	C 07D 471/04
	C 07D 405/04
	A 61K 31/517
	A 61K 31/519
	A 61P 29/00
EP 2300441*	***C 07D 239/95***
	A 61K 31/517
	A 61P 35/00
EP 2300443*	***C 07D 249/08***
	C 07D 401/12
	C 07D 401/04
	C 07D 401/06
	C 07D 401/14
	A 61K 31/4196
	A 61K 31/4709
	A 61K 31/454
	A 61P 11/00
	A 61P 29/00
EP 2300444*	***C 07D 251/10***
EP 2300452*	***C 07D 401/04***
	A 61K 31/44
	A 61P 25/00
EP 2300455*	***C 07D 401/10***
	C 07D 487/04
	C 07D 253/07
	A 61K 31/53
	A 61P 35/00
EP 2300457*	***C 07D 401/12***
	A 61K 31/4439
	A 61P 35/00
EP 2300461*	***C 07D 413/10***
	C 07D 413/14
	A 61K 31/5355
	A 61P 19/10
EP 2300462*	***C 07D 413/14***
	C 07D 273/01
	A 61K 31/553
	A 61P 7/00
EP 2300463*	***C 07D 417/14***
	C 07D 498/06
	A 61P 31/04
	A 61K 31/4709
	A 61K 31/4738

Број објаве европске пријаве патента	(51)
EP 2300464*	***C 07D 453/02***
	A 61K 31/439
	A 61P 11/00
EP 2300465*	***C 07D 471/04***
	C 07D 513/04
	A 61P 35/00
	A 61K 31/437
	A 61K 31/506
	A 61K 31/501
	A 61K 31/53
	A 61K 31/444
	A 61K 31/497
	A 61K 31/496
	A 61K 31/4545
EP 2300469*	***C 07D 471/04***
	C 07D 487/04
	A 61K 31/4985
	A 61K 31/4353
	A 61P 37/00
EP 2300472*	***C 07D 471/04***
	A 61K 31/437
	A 61P 5/44
	A 61P 5/46
EP 2300473*	***C 07D 471/08***
	A 61K 31/551
	A 61P 25/00
	C 07D 243/08
	C 07D 211/58
	A 61P 25/28
	A 61P 25/18
EP 2300474*	***C 07D 471/10***
	C 07D 498/20
	A 61P 25/22
	A 61P 25/24
	A 61P 29/00
EP 2300475*	***C 07D 471/14***
	A 61K 31/437
	A 61P 35/00
EP 2300476*	***C 07D 471/16***
	A 61K 31/4745
	A 61P 31/06
EP 2300478*	***C 07D 487/04***
	A 61K 31/519
EP 2300479*	***C 07D 489/08***
	A 61K 31/485
	A 61P 25/30
EP 2300480*	***C 07D 495/04***
EP 2300483*	***C 07D 498/08***
	A 61K 31/53
	A 61P 35/00
EP 2300484*	***C 07D 513/10***
	A 61K 31/4436
	A 61P 25/28
EP 2300494*	***C 07K 14/47***
	A 61K 39/00
	A 61K 39/395
	A 61K 38/17
	A 61K 38/04
	A 61K 38/10
	C 07K 7/08
EP 2300497*	***C 07K 14/755***

Број објаве европске пријаве патента	(51)
EP 2300498*	*C 07K 16/00*
EP 2300500*	*C 07K 16/28*
	C 12N 15/13
	C 12N 5/10
	C 12N 15/63
EP 2300568*	*C 10J 3/36*
	C 10J 3/14
	C 10J 3/16
	C 10B 49/06
	C 10J 3/56
	C 10J 3/54
EP 2300600*	*C 12N 5/00*
EP 2300609*	*C 12N 15/11*
	C 07K 14/255
	A 61K 39/39
EP 2300699*	*F 02B 33/30*
EP 2300740*	*F 16J 15/08*
	F 16J 15/28
	F 16J 15/32
EP 2300771*	*F 41A 29/00*
EP 2300804*	*G 01N 21/47*
	G 01N 21/86
	G 01N 21/27
EP 2300814*	*G 01N 29/07*
	G 01N 29/265
	G 01N 29/28
EP 2300823*	*G 01N 33/50*
	G 01N 33/53
	C 12Q 1/00
EP 2301289*	*H 04W 64/00*
	G 01S 5/02
EP 2301374	*A 44C 5/20*
	G 09F 3/16
EP 2301527	*A 61K 31/165*
	A 61P 25/24
	A 61K 31/22
EP 2301543	*A 61K 31/45*
	A 61P 3/10
EP 2301576	*A 61K 39/395*
	C 07K 16/28
	A 61P 35/00
	A 61P 37/00
	C 12N 5/20
EP 2301782	*B 60J 1/18*
EP 2301821	*B 61F 5/22*
	B 61D 3/10
EP 2301937	*C 07D 473/06*
	A 61K 31/522
EP 2302949	*H 04R 9/02*
	H 04R 9/00
	H 04R 9/04
EP 2302985	*H 05K 1/02*
	F 21V 19/00
EP 2303001*	*A 01K 67/00*
	A 61K 49/00
	G 01N 33/00
EP 2303022*	*A 01N 43/80*
	A 01N 37/20
	A 01P 13/00
EP 2303041*	*A 23L 3/3463*

Број објаве европске пријаве патента	(51)
EP 2303060*	*A 45F 3/04*
	A 45F 3/08
EP 2303071*	*A 47G 9/02*
	A 01G 9/02
EP 2303077*	*A 47J 31/36*
EP 2303083*	*A 47K 11/02*
	F 23D 14/02
	F 23D 14/82
EP 2303114*	*A 61B 5/055*
	A 61B 6/03
	A 61K 49/00
	G 01T 1/161
	G 01T 1/164
	G 01T 1/29
EP 2303184*	*A 61F 2/00*
	A 61F 13/00
EP 2303214*	*A 61G 17/02*
EP 2303227*	*A 61K 9/06*
	A 61P 27/16
	A 61K 9/14
	A 61K 9/16
	A 61K 31/573
	A 61K 47/34
EP 2303229*	*A 61K 9/08*
	A 61K 47/36
	A 61K 47/40
	A 61K 31/282
EP 2303233*	*A 61K 9/16*
	A 61K 47/12
	A 61K 9/20
	A 61K 9/28
	A 61K 9/26
	A 61K 9/48
	A 61K 31/4365
EP 2303238*	*A 61K 9/20*
	A 61K 31/00
EP 2303244*	*A 61K 9/50*
	C 07D 333/20
	A 61K 9/26
	A 61K 9/30
EP 2303251*	*A 61K 31/167*
	A 61K 31/192
	A 61K 31/519
	A 61P 9/10
	A 61P 29/00
	A 61P 37/00
EP 2303259*	*A 61K 31/343*
	A 61P 9/06
EP 2303262*	*A 61K 31/40*
	A 61K 31/4025
	A 61K 31/403
	A 61K 31/4375
	A 61K 31/4439
	A 61K 31/4985
	A 61K 31/5025
	A 61K 31/506
	A 61K 31/513
	A 61K 31/522
	A 61P 1/16
	A 61P 21/00

Број објаве европске пријаве патента	(51)
EP 2303268*	*A 61K 31/437*
	A 61K 31/4709
	A 61K 31/496
	A 61K 31/573
	A 61K 38/08
	A 61P 19/02
EP 2303270*	*A 61K 31/4402*
	A 61K 31/38
	A 61K 31/16
	A 61P 9/00
	A 61P 29/00
	C 07D 333/80
	C 07D 333/32
	C 07C 323/19
	C 07C 235/54
	C 07C 235/84
	C 07C 323/62
	C 07D 213/64
	C 07D 277/56
EP 2303274*	*A 61K 31/4995*
	A 61K 45/06
	A 61P 35/00
EP 2303276*	*A 61K 31/517*
	A 61P 35/00
EP 2303283*	*A 61K 31/7068*
	A 61K 31/7076
	A 61K 31/513
EP 2303287*	*A 61K 31/731*
	A 61P 11/06
	A 61P 27/14
	A 61P 37/08
EP 2303289*	*A 61K 33/26*
	A 61K 33/00
	A 61K 31/4439
	A 61P 1/00
	A 61P 7/06
EP 2303306*	*A 61K 38/16*
	A 61P 13/12
	A 61P 19/02
EP 2303310*	*A 61K 38/18*
	A 61K 38/48
	A 61P 9/00
	A 61K 38/20
EP 2303322*	*A 61K 39/165*
	C 12N 15/863
	C 07K 14/12
	C 12N 7/01
	C 12N 5/22
EP 2303332*	*A 61K 47/48*
	A 61P 35/00
EP 2303466*	*B 05B 7/24*
	F 16K 5/00
EP 2303490*	*B 22D 7/02*
EP 2303773*	*C 01B 17/04*
	B 01D 53/48
EP 2303774*	*C 01B 31/00*
	H 01M 4/38
	H 01M 4/04
	H 01M 4/08
	H 01M 4/58

Број објаве европске пријаве патента	(51)
EP 2303816*	*C 07C 17/02*
	C 07C 17/156
	C 07C 17/25
	C 07C 19/045
	C 07C 21/06
EP 2303820*	*C 07C 17/42*
EP 2303832*	*C 07C 235/56*
	A 61K 31/16
EP 2303842*	*C 07D 211/90*
	A 61K 31/4422
	A 61P 9/00
EP 2303845*	*C 07D 217/24*
	C 07D 493/08
	C 07D 495/08
	A 61K 31/472
	A 61P 27/00
	A 61P 9/00
	A 61P 25/00
	A 61P 37/00
EP 2303846*	*C 07D 217/24*
	A 61K 31/472
	A 61P 9/00
	A 61P 27/00
	A 61P 25/00
	A 61P 37/00
EP 2303850*	*C 07D 263/54*
	A 61K 31/423
	A 61K 31/4439
	A 61K 31/454
	A 61K 31/496
	A 61K 31/5377
	A 61K 31/541
	A 61P 29/00
	A 61P 37/00
	A 61P 37/06
	C 07D 263/56
	C 07D 413/12
EP 2303851*	*C 07D 265/36*
	C 07D 498/04
	A 61K 31/538
	A 61P 25/00
EP 2303854*	*C 07D 277/42*
EP 2303861*	*C 07D 401/12*
	C 07D 401/14
	C 07D 405/14
	C 07D 413/14
	A 61K 31/4439
	A 61P 35/00
EP 2303863*	*C 07D 401/12*
	C 07D 401/14
	C 07D 405/12
	C 07D 405/14
	C 07D 413/14
	A 61K 31/4409
	A 61K 31/5355
	A 61K 31/47
	A 61P 25/18
EP 2303866*	*C 07D 401/12*
	A 61K 31/4439
EP 2303869*	*C 07D 403/04*
	A 61K 31/506

Број објаве европске пријаве патента	(51)
EP 2303872*	*C 07D 413/10*
	A 61K 31/422
	A 61P 25/00
	C 07D 209/46
EP 2303873*	*C 07D 413/12*
	A 61K 31/538
	A 61P 11/00
	C 07D 231/12
EP 2303874*	*C 07D 417/06*
	C 07D 417/14
	A 01N 43/80
EP 2303875*	*C 07D 471/04*
	A 61K 31/519
	A 61P 35/00
EP 2303880*	*C 07D 471/04*
	C 07D 487/04
	A 61K 31/498
	A 61P 35/00
	C 07D 471/14
	C 07D 241/04
	C 07D 213/36
	C 07D 211/70
	C 07D 207/20
	A 61K 31/4985
EP 2303882*	*C 07D 471/14*
	A 61K 31/437
	A 61P 35/00
	C 07D 471/04
	C 07D 213/04
	C 07D 207/32
EP 2303884*	*C 07D 473/34*
	A 61K 31/52
	A 61P 25/00
	A 61P 29/00
EP 2303897*	*C 07F 7/22*
EP 2303919*	*C 07K 14/415*
	A 23J 1/14
	A 23J 3/14
	A 23L 2/66
	C 07K 1/28
	C 07K 1/30
	C 07K 1/34
EP 2303922*	*C 07K 14/58*
	G 01N 33/68
EP 2303923*	*C 07K 16/08*
	G 01N 33/569
	A 61K 39/395
EP 2304034*	*C 12N 15/62*
	C 12N 15/861
	A 61K 48/00
	A 61K 39/00
EP 2304040*	*C 12P 5/02*
	C 12N 15/63
	C 12N 9/88
	C 12N 15/60
	C 12N 1/20
	C 12N 1/21
EP 2304124*	*E 04D 3/365*
EP 2304146*	*E 05D 7/00*
	E 05D 15/30
	E 05D 15/52

Број објаве европске пријаве патента	(51)
EP 2304152*	*E 06B 1/62*
EP 2304177*	*E 21D 9/06*
	E 21D 9/08
EP 2304253*	*F 16C 11/06*
	F 16C 11/00
EP 2304317*	*F 23D 14/10*
	F 23Q 9/04
EP 2304326*	*F 24F 3/147*
	B 01D 46/52
	B 31D 5/04
	F 24F 12/00
	F 28F 21/00
EP 2304378*	*F 41H 1/02*
EP 2304592*	*G 06F 15/173*
EP 2305029	*A 01N 25/10*
	A 01N 47/40
	A 01P 7/02
	A 01P 7/04
EP 2305086	*A 47K 7/00*
	A 47K 10/16
	A 47K 10/20
	A 47K 10/42
	B 65D 83/08
EP 2305146	*A 61B 17/326*
EP 2305221	*A 61K 31/00*
	A 61K 31/502
	A 61P 35/00
EP 2305309	*A 61K 47/48*
EP 2305464	*B 41C 1/045*
EP 2305641	*C 07C 311/21*
	A 61K 31/341
	A 61K 31/426
	A 61K 31/427
	A 61K 31/4402
	A 61K 31/4406
	A 61K 31/443
	A 61K 31/4439
	A 61K 31/497
	A 61K 31/501
	A 61K 31/506
	A 61P 13/02
	A 61P 13/08
	A 61P 13/10
	A 61P 43/00
	C 07D 213/71
	C 07D 277/20
	C 07D 277/36
	C 07D 277/56
	C 07D 307/64
	C 07D 405/12
EP 2305642	*C 07C 327/56*
	A 61K 31/16
	A 61P 35/00
EP 2305672	*C 07D 417/12*
	A 61K 31/4439
	A 61K 31/497
	A 61K 31/541
	A 61P 25/28
	A 61P 43/00
	C 07D 417/10
	C 07D 417/14

Број објаве европске пријаве патента	(51)
EP 2305683	***C 07D 489/00***
	C 07D 489/08
	A 61K 9/00
	A 61K 31/485
EP 2305778	***C 10G 3/00***
	C 10L 1/02
EP 2305837	***C 12Q 1/68***
EP 2306271	***G 06F 3/01***
	G 06F 3/041
	H 04M 1/725
EP 2306273	***G 06F 3/02***
	G 06F 3/048
	G 06F 3/033
	G 06F 3/023
EP 2306367	***G 06K 9/20***
EP 2306538	***H 01L 41/047***
	G 06F 3/01
EP 2306806*	***A 01G 25/16***
EP 2306813*	***A 01K 61/00***
EP 2306831*	***A 01N 43/56***
	A 01N 25/30
	A 01P 7/04
	A 01P 7/02
	A 01P 5/00
	A 01P 9/00
EP 2306833*	***A 01N 43/56***
	A 01P 3/00
	A 01N 37/34
	A 01N 37/36
	A 01N 43/36
	A 01N 43/54
	A 01N 43/653
EP 2306834*	***A 01N 43/56***
	A 01P 3/00
	A 01N 31/14
	A 01N 37/02
	A 01N 37/28
	A 01N 37/38
	A 01N 37/40
	A 01N 37/42
	A 01N 37/44
	A 01N 41/02
	A 01N 41/10
	A 01N 43/08
	A 01N 43/22
	A 01N 43/24
	A 01N 43/28
EP 2306871*	***A 47J 31/36***
	B 65D 85/804
EP 2306923*	***A 61C 13/01***
	A 61C 13/36
	A 61C 13/38
	A 61C 19/04
EP 2306958*	***A 61H 23/04***
EP 2306966*	***A 61K 8/72***
EP 2306972*	***A 61K 9/00***
	A 61K 47/12
	A 61F 13/00
	A 61L 2/00
	A 61K 9/08

Број објаве европске пријаве патента	(51)
EP 2306975*	***A 61K 9/06***
	A 61P 27/16
	A 61K 31/045
	A 61K 9/16
	A 61K 47/34
EP 2306977*	***A 61K 9/08***
	A 61K 47/10
	A 61K 47/26
	A 61K 47/18
	A 61K 31/5575
EP 2306985*	***A 61K 9/20***
	A 61K 38/17
	A 61L 27/22
	C 07D 487/04
EP 2306988*	***A 61K 9/46***
	A 61K 31/58
EP 2306999*	***A 61K 31/194***
	A 61K 31/20
	A 61K 31/23
	A 61K 31/722
	A 61K 45/06
	A 61P 7/00
	A 61K 47/12
	A 61K 47/36
	A 61K 9/00
EP 2307003*	***A 61K 31/282***
	A 61K 31/337
	A 61K 31/436
	A 61K 31/4745
	A 61K 31/4995
	A 61K 31/505
	A 61K 31/517
	A 61K 31/704
	A 61P 35/00
EP 2307029*	***A 61K 31/7088***
	C 12N 15/11
EP 2307031*	***A 61K 31/722***
	A 61K 47/36
	A 61K 31/506
	A 61K 31/56
	A 61K 31/585
EP 2307041*	***A 61K 38/10***
	A 61P 35/00
EP 2307042*	***A 61K 38/10***
	A 61P 25/00
EP 2307047*	***A 61K 39/12***
	A 61P 31/12
	A 61P 3/10
	A 61P 19/02
EP 2307048*	***A 61K 39/12***
	A 61K 39/395
EP 2307051*	***A 61K 39/395***
EP 2307129*	***B 01J 13/14***
	A 01N 25/28
	A 61K 8/11
	A 61K 9/50
EP 2307288*	***B 65D 85/804***
	A 47J 31/06

Број објаве европске пријаве патента	(51)
EP 2307339*	***C 07C 17/02***
	C 07C 17/156
	C 07C 17/25
	C 07C 19/045
	C 07C 21/06
EP 2307343*	***C 07C 46/00***
	C 07C 46/10
	C 07D 213/70
	C 07C 50/24
	C 07C 50/32
EP 2307351*	***C 07C 215/10***
	C 07C 235/56
	A 61K 31/195
	A 61K 31/205
	A 61P 19/00
EP 2307362*	***C 07C 323/57***
	C 07C 321/20
	A 61K 31/167
	A 61K 31/10
	A 61P 11/00
	A 61P 37/08
EP 2307363*	***C 07D 209/14***
	C 07D 403/12
	A 61K 31/33
	A 61P 19/00
EP 2307364*	***C 07D 209/44***
	A 61K 31/4035
	A 61P 35/00
	A 61P 29/00
EP 2307367*	***C 07D 211/34***
	C 07D 211/90
	A 61K 31/4402
	A 61P 35/00
EP 2307373*	***C 07D 213/70***
	C 07D 213/89
	C 07C 46/10
	C 07C 50/32
EP 2307374*	***C 07D 213/74***
	C 07D 213/84
	A 61K 31/496
	A 61P 25/00
EP 2307381*	***C 07D 231/06***
	C 07D 231/12
	C 07D 233/22
	C 07D 261/08
	C 07D 271/06
EP 2307389*	***C 07D 281/16***
	A 61K 31/554
	A 61P 25/18
	A 61P 25/24
EP 2307397*	***C 07D 311/04***
	C 07D 405/12
	C 07D 407/12
	A 61K 31/353
	A 61P 29/00

Број објаве европске пријаве патента	(51)
EP 2307400*	***C 07D 401/04***
	C 07D 401/14
	C 07D 471/04
	A 61K 31/498
	A 61K 31/502
	A 61K 31/4709
	A 61P 35/00
EP 2307401*	***C 07D 401/12***
	C 07D 401/14
	C 07D 407/14
	C 07D 471/04
	A 61K 31/519
	A 61K 31/4709
	A 61K 31/4375
	A 61P 35/00
	C 07D 215/56
	C 07D 213/82
	C 07D 213/40
EP 2307403*	***C 07D 403/12***
	C 07D 403/14
	A 61K 8/49
	A 61Q 5/12
EP 2307409*	***C 07D 471/04***
	A 61K 31/437
	A 61P 35/00
EP 2307416*	***C 07D 487/04***
	A 61K 31/519
	A 61P 25/00
	A 61P 35/00
	C 07D 519/00
EP 2307420*	***C 07D 489/08***
	A 61K 31/485
	A 61P 25/32
EP 2307426*	***C 07D 519/00***
	A 61K 31/4985
	A 61K 31/4995
	A 61P 19/02
EP 2307439*	***C 07J 71/00***
	A 61K 31/58
	A 61P 5/30
EP 2307446*	***C 07K 7/64***
	A 61K 38/13
	C 07K 1/113
EP 2307456*	***C 07K 16/22***
	A 61K 39/395
EP 2307459*	***C 07K 16/28***
	A 61K 39/395
EP 2307543*	***C 12N 15/09***
EP 2307585*	***C 22C 9/00***
	C 22C 19/03
	F 16F 7/00
	F 16F 7/02
	F 16F 15/00
EP 2307783*	***F 16L 58/04***
EP 2307800*	***F 23D 14/10***
	F 23D 14/70
EP 2307803*	***F 23G 5/027***
	F 23G 5/08
EP 2307816*	***F 24H 1/28***
EP 2307885*	***G 01N 33/569***
EP 2307889*	***G 01N 33/68***

Број објаве европске пријаве патента	(51)
EP 2308137*	***H 01R 13/11***
	H 01R 11/28
EP 2308144*	***H 01T 4/06***
EP 2308324	***A 23L 2/00***
	A 23J 7/00
	A 23L 1/29
	A 23C 9/00
	A 23G 1/00
EP 2308361	***A 47L 13/10***
	A 47L 13/20
EP 2308477	***A 61K 9/20***
	A 61K 31/135
EP 2308482	***A 61K 31/165***
	A 61P 21/00
	A 61P 19/00
EP 2308491	***A 61K 31/4412***
	A 61P 11/00
EP 2308494	***A 61K 31/485***
	A 61K 9/22
EP 2308509	***A 61K 45/00***
	A 61K 31/343
	A 61K 31/427
	A 61K 31/4439
	A 61K 31/506
	A 61K 31/519
	A 61K 31/52
	A 61K 31/522
	A 61P 25/04
	A 61P 43/00
	C 07D 417/14
	C 07D 473/06
	C 07D 473/34
	C 07D 487/04
	C 07D 487/14
	C 07D 495/04
EP 2308773	***B 65D 83/08***
	A 47K 7/00
EP 2308774	***B 65D 83/08***
	A 47K 7/00
EP 2308869	***C 07D 401/14***
	A 61P 25/04
	A 61P 43/00
	C 07D 413/14
	C 07D 417/14
	A 61K 31/4545
EP 2308870	***C 07D 403/06***
	C 07D 471/04
	C 07D 473/00
	C 07D 487/04
	C 07D 513/04
	A 61P 25/00
	A 61K 31/4192
	A 61K 31/437
	A 61K 31/4196
	A 61K 31/5025
	A 61K 31/404
	A 61K 31/431

Број објаве европске пријаве патента	(51)
EP 2308886	***C 07H 19/01***
	A 61K 31/7048
	A 61P 3/10
	C 07H 7/04
	C 07H 23/00
EP 2308967	***C 12N 9/64***
EP 2309059	***D 21H 17/14***
	D 21H 17/15
	D 21H 17/18
	D 21H 17/24
	D 21H 17/25
	D 21H 17/28
	D 21H 17/37
	D 21H 17/43
	D 21H 19/12
	D 21H 21/18
	D 21H 23/24
	D 21H 23/28
	D 21H 23/50
	C 08B 15/10
	C 08L 1/02
	C 09D 101/10
EP 2309218	***F 28B 3/04***
	A 23N 7/00
	F 28B 11/00
EP 2309460	***G 06T 15/00***
	G 06T 15/80
EP 2309841*	***A 01G 9/18***
EP 2309846*	***A 01N 25/00***
EP 2309852*	***A 01N 37/18***
	A 61K 31/16
EP 2309863*	***A 01N 59/16***
	A 01N 59/00
	A 01N 25/22
	A 01N 25/02
	A 01P 1/00
EP 2309873*	***A 23J 1/14***
	A 23J 3/14
	A 23L 1/305
	A 23L 2/66
	C 07K 1/14
	C 07K 14/415
EP 2309950*	***A 61F 2/42***
	A 61F 2/28
	A 61F 2/30
EP 2309983*	***A 61K 9/08***
	A 61K 31/519
	A 61P 3/00
EP 2309985*	***A 61K 9/14***
	A 61K 9/16
	A 61K 9/20
	A 61K 9/48
	A 61K 47/12
	A 61K 47/36
	A 61K 47/38
EP 2309989*	***A 61K 9/16***
	A 61K 47/34
	A 61K 33/24
	A 61K 31/337

Број објаве европске пријаве патента	(51)
EP 2309990*	***A 61K 9/16***
	A 61K 47/16
	A 61K 47/34
	A 61K 31/337
EP 2309991*	***A 61K 9/16***
	A 61K 31/475
	A 61K 47/34
	A 61P 35/00
EP 2309992*	***A 61K 9/20***
	A 61K 9/28
EP 2309994*	***A 61K 9/20***
	A 61K 9/28
	A 61K 31/554
EP 2310000*	***A 61K 9/51***
	A 61K 31/48
EP 2310001*	***A 61K 9/70***
	A 61K 31/565
EP 2310010*	***A 61K 31/426***
	A 61K 31/427
	A 61P 35/00
	C 07D 277/34
EP 2310012*	***A 61K 31/497***
EP 2310014*	***A 61K 31/505***
EP 2310016*	***A 61K 31/54***
EP 2310020*	***A 61K 31/70***
	A 61P 35/00
	A 61K 31/7012
EP 2310028*	***A 61K 38/00***
	A 61P 35/00
	A 61P 5/00
EP 2310029*	***A 61K 38/00***
	C 12N 9/00
	A 61P 35/00
EP 2310032*	***A 61K 38/08***
	A 61P 25/16
	A 61P 25/28
	C 07K 16/18
EP 2310033*	***A 61K 38/08***
	A 61P 25/16
	A 61P 25/28
	C 07K 16/18
EP 2310034*	***A 61K 38/08***
	C 07K 16/18
	A 61P 27/16
	A 61P 25/28
EP 2310041*	***A 61K 38/25***
	A 61P 9/00
	A 61P 17/00
EP 2310053*	***A 61K 47/48***
	A 61K 31/13
	A 61K 9/08
	A 61K 47/10
	A 61K 47/12
EP 2310095*	***A 61P 31/14***
	A 61K 38/07
	A 61K 38/06
	A 61K 38/08
	C 07K 5/08
	C 07K 5/10
	C 07K 5/12
EP 2310098*	***A 63B 59/14***

Број објаве европске пријаве патента	(51)
EP 2310149*	***B 08B 9/055***
EP 2310165*	***B 23P 17/06***
	B 23D 31/00
	E 04C 5/01
EP 2310175*	***B 29C 39/10***
	H 01L 33/00
EP 2310263*	***B 64C 27/00***
	F 16F 15/36
EP 2310301*	***B 65D 85/804***
	A 47J 31/06
EP 2310331*	***C 03B 7/06***
EP 2310342*	***C 05F 11/02***
	B 01F 17/52
	B 01F 17/56
	B 09C 1/08
EP 2310346*	***C 07C 17/00***
EP 2310356*	***C 07C 233/79***
	A 61K 31/4412
	A 61K 31/444
	A 61P 25/00
	C 07C 233/00
	C 07D 213/81
	C 07D 215/48
	C 07D 231/14
	C 07D 241/44
	C 07D 333/38
	C 07D 401/12
	C 07D 401/14
	C 07D 403/12
	C 07D 405/12
	C 07D 405/14
EP 2310359*	***C 07C 311/48***
	C 07D 231/12
	C 07D 213/36
	C 07D 243/08
	C 07D 261/08
	C 07D 307/14
	C 07D 307/52
	C 07D 333/36
	C 07D 413/12
	A 61K 31/18
	A 61P 29/00

Број објаве европске пријаве патента	(51)
EP 2310366*	***C 07D 213/02***
	C 07D 249/12
	C 07D 471/04
	A 61K 31/437
	A 61P 37/08
	A 61P 35/00
	A 61P 25/00
	A 61P 21/00
	A 61P 27/00
	A 61P 19/02
	A 61P 11/06
	A 61P 7/02
	A 61P 3/00
	A 61K 31/5377
	C 07D 277/82
	C 07D 213/61
	C 07D 213/26
	A 61K 31/496
	A 61K 31/428
	A 61P 17/06
EP 2310371*	***C 07D 213/64***
	C 07D 213/70
	C 07D 213/74
	C 07D 407/04
	C 07D 213/643
	A 61K 31/44
	A 61K 31/443
	A 61K 31/444
	A 61P 3/10
	A 61P 3/06
EP 2310373*	***C 07D 231/56***
	C 07D 275/04
	C 07D 403/12
	C 07D 405/12
	C 07D 471/04
	A 61K 31/437
	A 61P 35/00
EP 2310374*	***C 07D 237/20***
	C 07D 237/22
	C 07D 401/12
	A 61K 31/501
	A 61P 3/04
EP 2310382*	***C 07D 401/12***
	C 07D 401/14
	C 07D 403/12
	C 07D 403/14
	C 07D 405/14
	A 61K 31/4412
	A 61P 35/00
EP 2310385*	***C 07D 413/14***
	A 61P 9/12
	A 61K 31/4245
EP 2310387*	***C 07D 453/02***
	A 61P 13/10
	A 61K 31/439
EP 2310389*	***C 07D 471/04***
	A 61K 31/4192
	A 61P 35/00

Број објаве европске пријаве патента	(51)
EP 2310392*	***C 07D 487/04***
	C 07D 487/02
	A 61K 31/445
	A 61P 11/00
	A 61P 29/00
EP 2310396*	***C 07D 513/18***
	C 07D 515/18
	A 61K 31/55
	A 61P 31/14
EP 2310404*	***C 07K 14/195***
	A 23C 9/12
EP 2310410*	***C 07K 14/715***
	C 07K 16/24
	C 12N 15/62
EP 2310418*	***C 08B 1/00***
	C 07H 1/00
	B 01J 19/00
EP 2310460*	***C 08L 95/00***
	C 10C 3/00
EP 2310485*	***C 12M 1/34***
EP 2310491*	***C 12N 5/00***
EP 2310499*	***C 12N 9/92***
	C 12P 7/10
	C 12R 1/865
EP 2310506*	***C 12N 15/11***
	A 61K 31/7088
EP 2310508*	***C 12N 15/62***
	C 07K 14/715
	C 07K 16/28
	C 07K 16/24
	A 61K 38/17
EP 2310530*	***C 12Q 1/68***
EP 2310598*	***E 05B 27/02***
	E 05B 27/06
	E 05B 19/06
EP 2310623*	***E 21B 33/124***
	E 21B 43/25
EP 2310721*	***F 16J 15/10***
EP 2310724*	***F 16J 15/34***
EP 2310794*	***F 28G 15/02***
EP 2311332	***A 24F 25/02***
EP 2311458	***A 61K 31/485***
	A 61K 9/22
EP 2311459	***A 61K 31/485***
	A 61K 9/22
	A 61K 9/32
EP 2311464	***A 61K 31/553***
	C 07D 281/02

Број објаве европске пријаве патента	(51)
EP 2311807	***C 07D 213/74***
	C 07D 239/48
	C 07D 239/95
	C 07D 401/12
	C 07D 401/14
	C 07D 403/12
	C 07D 403/14
	C 07D 413/12
	C 07D 417/12
	C 07D 451/02
	C 07D 453/02
	C 07D 471/04
	C 07D 473/16
	C 07D 487/04
	C 07D 487/08
	A 61K 31/506
	A 61P 25/00
	A 61P 37/00
	A 61P 31/00
EP 2311810	***C 07D 217/06***
	A 61K 31/4545
	A 61K 31/4725
	A 61K 31/55
	A 61M 1/36
	A 61P 7/04
	C 07D 401/12
	C 07D 401/14
EP 2311839	***C 07D 489/08***
EP 2311900	***C 08G 81/00***
	C 08F 4/00
	C 08F 8/00
	C 08F 289/00
	C 08G 64/00
EP 2312025	***D 01G 21/00***
	D 01B 1/00
EP 2312334	***G 01S 13/34***
	G 01S 13/74
EP 2312933*	***A 01H 1/06***
	A 01H 1/04
	A 01H 5/04
	A 01H 5/10
EP 2312951*	***A 01N 43/52***
EP 2313014*	***A 61B 17/128***
EP 2313026*	***A 61F 2/00***
EP 2313038*	***A 61F 7/10***
EP 2313039*	***A 61F 13/10***
EP 2313050*	***A 61J 3/00***
EP 2313054*	***A 61K 8/04***
	A 61K 8/06
	A 61K 8/19
	A 61Q 19/00
	A 61K 9/107
	A 61K 47/02
EP 2313087*	***A 61K 9/48***
	A 61K 9/10
	A 61K 47/14
	A 61K 47/24
	A 61K 47/44
	A 61K 31/404
EP 2313088*	***A 61K 9/50***
	A 61K 31/4439

Број објаве европске пријаве патента	(51)
EP 2313090*	***A 61K 31/10***
	A 23L 1/29
	A 61K 31/22
	C 07C 317/04
	C 07C 317/06
	C 07C 317/12
	C 07C 321/14
	C 07C 321/18
	C 07C 321/22
	A 61P 3/04
	A 61P 9/10
EP 2313092*	***A 61K 31/20***
	A 61K 31/202
	A 61P 27/00
EP 2313109*	***A 61K 39/395***
	C 07K 16/24
	C 07K 16/28
	C 07K 16/46
EP 2313115*	***A 61K 47/34***
	A 61K 9/107
EP 2313158*	***A 61Q 5/12***
	A 61K 8/64
	A 61K 8/81
	A 61K 8/86
EP 2313159*	***A 61Q 5/12***
	A 61Q 1/00
	A 61K 8/64
	A 61Q 17/00
EP 2313182*	***B 01D 57/02***
EP 2313252*	***B 29C 63/00***
EP 2313264*	***B 31F 1/28***
	B 32B 7/14
	B 31F 5/04
	B 32B 29/08
EP 2313330*	***B 65D 88/00***
EP 2313370*	***C 07D 207/08***
	C 07D 207/48
	C 07D 211/32
	C 07D 211/94
	C 07D 211/96
	C 07D 307/12
	C 07D 309/04
	C 07D 307/26
	C 07D 309/12
	C 07D 335/02
	C 07D 401/06
	C 07D 405/06
	C 07D 409/06
	C 07D 413/06
	C 07D 491/18
EP 2313374*	***C 07D 217/24***
	C 07D 217/02
	C 07D 217/22
	C 07D 405/12
	C 07D 409/12
	C 07D 417/12
	A 61K 31/472
	A 61K 31/4725
	A 61P 9/12
	A 61P 43/00

Број објаве европске пријаве патента	(51)
EP 2313376*	***C 07D 237/28***
	C 07D 405/04
	C 07D 409/04
	A 61K 31/502
	A 61P 25/00
	A 61P 35/00
	C 07D 237/36
EP 2313382*	***C 07D 277/24***
	A 61K 31/425
EP 2313387*	***C 07D 309/32***
	C 07D 335/02
	C 07D 405/10
	C 07D 407/10
	C 07D 409/10
	C 07D 417/10
	C 07D 493/08
	A 01N 43/16
	C 07C 49/603
EP 2313388*	***C 07D 309/32***
	C 07D 335/02
	C 07D 405/10
	C 07D 407/10
	C 07D 409/10
	C 07D 417/10
	C 07D 493/08
	C 07C 49/603
	A 01N 43/16
EP 2313391*	***C 07D 401/04***
	C 07D 401/14
	C 07D 403/04
	C 07D 409/04
	C 07D 413/04
	C 07D 417/04
	A 61K 31/4725
	A 61P 25/18
EP 2313392*	***C 07D 401/12***
	C 07D 403/12
	C 07D 409/12
	A 61K 31/40
	A 61P 1/00
	A 61P 11/00
	A 61P 25/00
EP 2313393*	***C 07D 401/12***
	C 07D 403/12
	C 07D 413/12
	C 07D 417/12
	A 61K 31/40
	A 61P 1/00
	A 61P 11/00
	A 61P 25/00
EP 2313399*	***C 07D 409/04***
	C 07D 409/14
	C 07D 417/04
	A 61K 31/427
	A 61K 31/4196
	A 61K 31/5377
	A 61P 35/00
	A 61P 29/00
	A 61P 9/00

Број објаве европске пријаве патента	(51)
EP 2313402*	***C 07D 413/14***
	A 61K 31/345
	A 61P 31/04
EP 2313404*	***C 07D 453/02***
	A 61K 31/439
	A 61P 11/00
EP 2313407*	***C 07D 471/04***
	C 07D 487/04
	C 07D 519/00
	A 61K 31/437
	A 61P 35/00
EP 2313412*	***C 07D 487/04***
	C 07D 471/04
	C 07D 207/323
	C 07D 209/40
	C 07D 233/64
	A 61K 31/437
EP 2313414*	***C 07D 487/04***
	A 61K 31/505
	A 61K 31/519
	A 61P 35/00
	A 61P 21/00
	A 61P 29/00
EP 2313416*	***C 07D 491/04***
EP 2313430*	***C 07K 14/47***
	A 61K 51/08
EP 2313496*	***C 12N 5/10***
	C 12N 5/00
EP 2313522*	***C 12Q 1/68***
EP 2313586*	***E 05B 73/00***
EP 2313634*	***F 02G 5/00***
EP 2313708*	***F 24J 3/08***
	F 28D 21/00
	F 25B 30/06
EP 2313766*	***G 01N 29/04***
	F 16L 55/26
	F 16L 55/48
	G 01N 29/07
	G 01N 29/34
EP 2313769*	***G 01N 33/48***
	G 01N 33/50
EP 2313820*	***G 06F 3/01***
	G 06F 3/048
	H 04M 1/725
EP 2313869*	***G 07C 5/02***
	G 01C 19/00
EP 2313895*	***H 01F 1/147***
EP 2313943*	***H 01Q 1/14***
EP 2313969*	***H 03B 28/00***
	G 06F 1/02
EP 2314292	***A 61K 31/277***
	A 61K 31/55
	A 61P 33/00
	A 61P 33/10

Број објаве европске пријаве патента	(51)
EP 2314567	***C 07C 233/76***
	C 07C 311/14
	C 07D 213/81
	C 07D 213/82
	C 07D 333/38
	C 07D 295/155
	A 61P 19/02
	A 61P 29/00
	A 61P 11/06
	A 61K 31/167
	A 61K 31/381
	A 61K 31/44
	A 61K 31/445
EP 2314589	***C 07D 489/08***
	A 61K 31/485
	A 61P 29/00
EP 2314620	***C 07K 16/10***
	A 61K 39/395
	A 61P 31/14
	C 12N 15/13
	C 12N 15/63
	C 12N 5/10
EP 2314621	***C 07K 16/10***
	A 61K 39/395
	A 61P 31/14
	C 12N 15/13
	C 12N 15/63
	C 12N 5/10
EP 2315127	***G 06F 17/00***
	G 06F 17/30
EP 2315521*	***A 01N 43/58***
EP 2315544*	***A 47K 3/40***
	E 03C 1/28
EP 2315549*	***A 61B 5/00***
	G 06F 3/048
	H 04L 9/32
	G 08B 1/08
	G 06F 15/16
	G 06N 5/02
EP 2315580*	***A 61K 9/00***
	A 61K 47/02
	A 61K 47/12
EP 2315581*	***A 61K 9/06***
	A 61K 31/196
	A 61K 31/513
	A 61K 31/60
	A 61P 17/12
EP 2315586*	***A 61K 31/13***
	A 61P 27/16
	A 61P 43/00
EP 2315592*	***A 61K 31/506***
	A 61P 9/12
EP 2315593*	***A 61K 31/7056***
	A 61P 7/02
EP 2315594*	***A 61K 31/7088***
	A 61K 31/7105
	A 61P 35/00
EP 2315597*	***A 61K 39/04***
	C 07K 14/35
	G 01N 33/569

Број објаве европске пријаве патента	(51)
EP 2315601*	***A 61K 39/395***
	A 61P 35/00
	A 61K 31/435
EP 2315634*	***B 06B 1/08***
	A 61B 17/32
	H 01L 41/20
	A 61B 17/22
EP 2315639*	***B 22F 1/00***
	B 22F 9/24
	B 82B 1/00
EP 2315657*	***B 30B 9/30***
	B 65B 27/06
	B 30B 13/00
	B 65G 1/16
	B 65G 69/00
	B 29D 30/06
EP 2315664*	***B 32B 11/00***
EP 2315747*	***C 07D 207/456***
	C 07C 327/20
	C 07C 327/32
	C 07H 3/06
	C 08B 37/00
	C 07K 14/31
EP 2315748*	***C 07D 209/08***
	C 07C 271/24
	C 07D 203/14
EP 2315751*	***C 07D 213/82***
	C 07D 233/88
	C 07D 407/08
	C 07D 413/12
	C 07D 417/12
	C 07D 471/04
	C 07D 471/10
	C 07D 487/04
	C 07D 487/06
	C 07D 487/10
	C 07D 487/16
	C 07D 491/10
	C 07D 495/10
	A 61K 31/506
	A 61K 31/404
EP 2315755*	***C 07D 239/70***
	C 07D 495/04
EP 2315756*	***C 07D 271/08***
	A 61K 31/4245
	A 61P 1/00
	A 61P 11/00
	A 61P 17/00
	A 61P 19/00
	A 61P 25/00
	A 61P 27/00
	A 61P 29/00
	A 61P 31/00
	A 61P 35/00
	A 61P 37/00
	A 61P 43/00

Број објаве европске пријаве патента	(51)
EP 2315763*	***C 07D 401/12***
	C 07D 401/14
	C 07D 403/12
	C 07D 403/14
	C 07D 405/12
	C 07D 405/14
	C 07D 413/12
	C 07D 413/14
	C 07D 417/12
	C 07D 417/14
	C 07D 471/04
	C 07D 471/08
	C 07D 513/04
	A 61K 31/4184
	A 61K 31/437
EP 2315773*	***C 07K 14/35***
	A 61K 39/04
EP 2315779*	***C 07K 16/28***
	A 61K 39/395
EP 2315821*	***C 12C 11/07***
	C 12H 1/06
EP 2315834*	***C 12N 15/60***
	C 12N 15/61
	C 12N 9/88
	C 12N 9/90
	C 07K 14/35
	A 61K 38/51
	A 61K 38/52
	A 61K 39/04
EP 2315882*	***E 02D 5/80***
EP 2315965*	***F 16D 65/06***
EP 2316011*	***G 01N 11/00***
	G 01N 11/16
EP 2316154*	***H 02B 1/38***
	E 05D 11/00
EP 2316809	***C 07C 13/48***
	C 07C 209/62
	C 07C 211/60
	C 07C 13/19
	C 07C 17/26
	C 07C 17/30
EP 2316813	***C 07C 209/06***
	C 07C 211/31
	A 01N 45/02
EP 2316814	***C 07C 209/28***
	A 01N 45/02
	C 07C 211/31
	C 07C 13/19
	C 07C 17/26
	C 07C 17/30
	C 07C 25/18
EP 2316815	***C 07C 209/28***
	A 01N 45/02
	C 07C 211/31
	C 07C 13/19
	C 07C 17/26
	C 07C 17/30
	C 07C 25/18
	C 07C 23/10
EP 2316821	***C 07C 253/30***
	C 07D 257/04

Број објаве европске пријаве патента	(51)
EP 2316832	***C 07D 407/04***
	C 07D 405/04
	C 07D 307/94
	A 61K 31/4355
	A 61K 31/438
EP 2316833	***C 07D 407/04***
	C 07D 405/04
	C 07D 307/94
	A 61K 31/4355
	A 61K 31/438
EP 2316837	***C 07D 489/08***
	A 61K 31/485
	A 61P 29/00
EP 2316970	***C 12Q 1/68***
EP 2317845*	***A 01N 37/18***
EP 2317852*	***A 01N 43/62***
	A 61K 31/55
EP 2317881*	***A 24D 1/04***
	A 24D 3/04
	A 24C 5/56
	A 24D 1/02
	A 24D 3/06
EP 2317930*	***A 61B 17/00***
EP 2317968*	***A 61K 8/04***
	A 61K 8/42
	A 61K 8/65
	A 61K 8/73
	A 61Q 19/10
EP 2317979*	***A 61K 9/16***
	A 61K 38/22
	A 61P 5/06
EP 2317984*	***A 61K 9/16***
	A 61K 47/44
	A 61K 8/92
	A 61K 9/00
	A 61L 15/22
	A 61L 15/34
	A 61L 15/42
	A 61M 37/00
	A 61P 17/00
	A 61Q 19/00
	D 06M 16/00
	A 41D 19/00
EP 2317987*	***A 61K 9/46***
	A 61K 31/4178
	A 61K 31/549
	A 61P 9/04
	A 61P 9/12
	A 61P 13/12
EP 2317991*	***A 61K 31/00***
	A 61K 31/485
	A 61P 13/02
EP 2318001*	***A 61K 31/44***
EP 2318008*	***A 61K 31/54***
EP 2318032*	***A 61K 38/17***
	A 61P 3/00
EP 2318034*	***A 61K 38/18***
	A 61K 38/20
	A 61K 8/64
	A 61P 17/02
	A 61Q 19/00

Број објаве европске пријаве патента	(51)
EP 2318042*	***A 61K 39/12***
	A 61P 35/00
EP 2318048*	***A 61K 39/395***
	C 07K 16/18
EP 2318130*	***B 01J 21/06***
	B 01J 21/18
	B 01J 37/08
	H 01M 4/00
EP 2318194*	***B 29C 49/00***
	B 29C 49/22
	B 29C 45/16
	B 65D 1/02
EP 2318313*	***C 01B 33/037***
	B 01J 8/18
EP 2318355*	***C 07C 229/46***
	C 07C 233/58
	C 07C 233/60
	C 07C 255/47
	C 07C 259/08
	C 07C 261/04
	C 07C 271/24
	C 07C 62/06
	C 07C 62/38
	C 07C 69/00
	C 07C 69/753
	C 07D 217/04
	A 61K 31/19
	A 61P 3/04
	A 61P 3/10
EP 2318363*	***C 07D 207/08***
	C 07D 207/16
	C 07D 401/14
	C 07D 407/14
	C 07D 471/10
	A 61K 31/4025
	A 61K 31/438
	A 61K 31/4439
	A 61K 31/454
	A 61P 35/00
EP 2318372*	***C 07D 221/26***
	A 61K 31/485
	A 61P 25/36
	A 61P 29/00
EP 2318377*	***C 07D 239/02***
EP 2318382*	***C 07D 277/82***
	C 07D 471/04
	A 61K 31/437
	A 61P 35/00
EP 2318389*	***C 07D 401/12***
	C 07D 401/14
	C 07D 403/12
	C 07D 413/14
	C 07D 471/04
	A 61K 31/501
	A 61K 31/506
	A 61P 35/00
EP 2318390*	***C 07D 401/14***
	A 61K 31/444

Број објаве европске пријаве патента	(51)
EP 2318392*	***C 07D 401/14***
	C 07D 403/12
	C 07D 403/14
	C 07D 409/14
	C 07D 413/14
	A 61K 31/506
EP 2318395*	***C 07D 403/12***
	C 07D 403/10
	A 61K 31/4025
	A 61P 35/00
EP 2318396*	***C 07D 405/14***
	A 61K 31/496
	A 61P 31/10
EP 2318401*	***C 07D 417/04***
	C 07D 417/02
	C 07D 413/04
	C 07D 413/02
	C 07D 487/04
	C 07D 487/02
	A 61K 31/33
	A 61P 35/00
EP 2318410*	***C 07D 487/02***
	A 61K 31/519
EP 2318415*	***C 07D 498/04***
	C 07D 519/00
	A 61K 31/519
	A 61P 3/10
	A 61P 7/02
	A 61P 9/04
	A 61P 9/10
	A 61P 9/12
	A 61P 9/14
	A 61P 11/00
	A 61P 13/12
	A 61P 25/28
	A 61P 29/00
	A 61P 31/02
	A 61P 35/00
EP 2318419*	***C 07F 5/02***
	C 07F 5/04
	C 07F 5/06
	A 61K 38/05
	A 61P 35/00
	A 61P 29/00
EP 2318427*	***C 07J 41/00***
	C 07J 71/00
	A 61K 31/573
	A 61P 5/44
	A 61P 27/02
EP 2318428*	***C 07K 7/06***
	A 61K 38/08
EP 2318433*	***C 07K 14/62***
	C 07K 14/46
EP 2318435*	***C 07K 14/82***
	C 07K 19/00
	A 61K 38/16
EP 2318437*	***C 07K 16/28***
	A 61K 39/395
	A 61P 25/28
	A 61P 37/00

Број објаве европске пријаве патента	(51)
EP 2318442*	***C 07K 16/28***
	A 61K 39/395
	A 61P 25/00
EP 2318520*	***C 12N 5/0775***
	C 12N 5/02
	A 61K 35/12
EP 2318524*	***C 12N 9/42***
	C 12N 15/74
	C 12P 21/02
	C 12N 15/62
	C 12P 7/10
EP 2318541*	***C 12Q 1/68***
EP 2318545*	***C 12Q 1/68***
EP 2318548*	***C 12Q 1/68***
	C 07K 16/32
EP 2318551*	***C 12Q 1/68***
	G 01N 33/68
	G 01N 33/53
	G 06F 19/00
EP 2318587*	***E 01B 9/30***
EP 2318657*	***E 21C 45/00***
EP 2318739*	***F 16J 15/32***
EP 2319036*	***G 10K 15/04***
EP 2319070*	***H 01L 21/306***
	H 01L 21/314
	H 01L 33/00
	C 30B 33/00
EP 2319079*	***H 01L 25/00***
EP 2319096*	***H 01L 33/00***
EP 2319499	***A 61K 9/16***
	A 61K 9/20
EP 2319542	***A 61K 47/48***
EP 2319568	***A 61M 16/00***
	A 61M 16/16
EP 2319840	***C 07D 333/78***
	A 61K 31/381
	A 61K 31/4025
	A 61K 31/4535
	A 61K 31/496
	A 61K 31/5377
	A 61K 31/54
	A 61P 11/06
	A 61P 29/00
	A 61P 37/08
	A 61P 43/00
EP 2319846	***C 07D 489/08***
	A 61K 31/485
	A 61P 29/00
EP 2319868	***C 07K 16/18***
	A 61K 39/395
	A 61K 39/00
	A 61P 9/10
	A 61K 31/33
	G 01N 33/68
	G 01N 33/53
	C 07K 14/775

Број објаве европске пријаве патента	(51)
EP 2319869	***C 07K 16/18***
	A 61K 49/00
	C 07K 16/46
	G 01N 33/15
	G 01N 33/50
	G 01N 33/53
	C 12N 15/09
EP 2319923	***C 12N 15/09***
	C 12N 1/15
	C 12N 1/21
	C 12P 17/18
EP 2320733*	***A 01N 43/50***
	A 01N 25/22
EP 2320738*	***A 01N 43/78***
	A 61K 31/425
EP 2320746*	***A 23J 1/14***
	A 23J 3/14
	A 23K 1/14
	A 23L 1/305
	A 23L 2/66
	C 07K 1/00
	C 07K 1/34
	C 07K 14/415
EP 2320747*	***A 23J 1/14***
	A 23J 3/14
	A 23K 1/14
	A 23L 1/305
	C 07K 1/14
	C 07K 14/415
EP 2320762*	***A 43B 7/06***
	A 43B 7/12
	A 43B 13/16
EP 2320870*	***A 61K 9/00***
EP 2320871*	***A 61K 9/00***
EP 2320872*	***A 61K 9/16***
	A 61K 47/14
EP 2320876*	***A 61K 9/48***
EP 2320878*	***A 61K 31/045***
	A 61K 31/35
	A 61P 11/00
	A 61P 11/06
	A 61P 11/08
EP 2320886*	***A 61K 31/325***
	A 61K 31/357
	A 61K 31/396
	A 61K 31/40
	A 61K 31/4025
	A 61K 31/403
	A 61K 31/4155
	A 61K 31/4178
	A 61K 31/4192
	A 61K 31/4245
	A 61K 31/427
	A 61K 31/428
	A 61K 31/4433
	A 61K 31/4439
	A 61K 31/453
EP 2320890*	***A 61K 31/381***
	A 61P 39/02

Број објаве европске пријаве патента	(51)
EP 2320895*	***A 61K 31/437***
	A 61K 31/506
	A 61K 31/519
	A 61K 31/5377
	A 61K 31/5383
	A 61K 31/55
	C 07D 471/04
	C 07D 487/04
	C 07D 487/10
	C 07D 498/04
	C 07D 498/14
	C 07D 491/107
	A 61P 35/00
EP 2320905*	***A 61K 31/522***
	C 07D 473/16
	C 07D 473/18
	A 61P 29/00
EP 2320923*	***A 61K 38/00***
EP 2320928*	***A 61K 38/17***
	A 61P 19/02
EP 2320929*	***A 61K 38/17***
EP 2320930*	***A 61K 38/17***
EP 2320945*	***A 61K 39/07***
	A 61K 47/00
EP 2320956*	***A 61K 51/04***
EP 2321022*	***B 01D 9/00***
	C 30B 7/00
	A 61K 9/16
	B 01D 1/18
	F 26B 5/06
	F 26B 3/12
EP 2321023*	***B 01D 9/00***
	C 30B 7/00
	A 61K 9/16
	B 01D 1/18
	F 26B 5/06
	F 26B 3/12
EP 2321042*	***B 01J 19/18***
	C 13K 13/00
EP 2321183*	***B 65B 25/04***
	B 65B 19/34
	B 65B 5/04
EP 2321216*	***B 81C 1/00***
	B 81B 7/02
	H 05K 5/06
EP 2321257*	***C 07C 209/78***
	B 01J 21/12
	B 01J 37/00
EP 2321272*	***C 07C 323/52***
	C 07D 211/60
	A 61K 31/215
	A 61K 31/4458
	A 61P 31/04
EP 2321278*	***C 07D 213/24***
	C 07D 401/04
	C 07D 407/04
	C 07D 409/04
	A 61K 31/216
	A 61P 25/28

Број објаве европске пријаве патента	(51)
EP 2321286*	***C 07D 241/52***
	C 07D 401/04
	A 61K 31/497
	A 61P 25/28
EP 2321287*	***C 07D 263/28***
	C 07D 413/12
	A 61K 31/421
	A 61K 31/422
	A 61P 25/00
	A 61P 3/04
	A 61P 3/06
	A 61P 3/10
EP 2321290*	***C 07D 277/54***
EP 2321295*	***C 07D 401/04***
	C 07D 487/04
	A 61K 31/53
	A 61P 25/28
	A 61P 3/10
	A 61P 35/00
	A 61P 33/06
EP 2321298*	***C 07D 401/12***
	C 07D 403/12
	C 07D 403/14
	A 61K 31/506
	A 61P 35/00
EP 2321301*	***C 07D 403/12***
	A 61K 31/4155
	A 61K 31/422
	A 61P 7/02
	C 07D 405/14
	C 07D 413/12
EP 2321312*	***C 07D 471/04***
EP 2321313*	***C 07D 471/04***
	A 61K 31/519
	A 61P 31/10
	A 61P 17/14
	A 61P 25/00
EP 2321314*	***C 07D 471/04***
	A 61K 31/519
	A 61P 25/00
EP 2321315*	***C 07D 471/04***
	A 61K 31/519
	A 61P 25/00
EP 2321316*	***C 07D 471/04***
	A 61K 31/519
	A 61P 25/00
EP 2321321*	***C 07D 487/04***
	A 61K 31/505
	A 61P 25/28
EP 2321324*	***C 07D 498/04***
	A 61K 31/4985
	A 61P 25/00
EP 2321325*	***C 07D 498/18***
	C 07D 498/22
	A 61K 31/395
	A 61P 35/00
EP 2321337*	***C 07K 1/18***
	C 07K 1/34
	C 07K 1/36

Број објаве европске пријаве патента	(51)
EP 2321345*	***C 07K 14/705***
	C 07K 16/28
	C 12N 15/62
	A 61K 38/17
EP 2321348*	***C 07K 16/18***
EP 2321352*	***C 07K 16/28***
EP 2321390*	***C 10L 5/40***
EP 2321552*	***F 16G 3/10***
	F 16G 3/08
EP 2321569*	***F 21L 4/00***
EP 2321789*	***G 06Q 50/00***
	C 12Q 1/68
EP 2321859*	***H 01L 35/00***
	H 02J 7/00
EP 2321925*	***H 04L 5/00***
EP 2321983*	***H 04W 4/00***
EP 2322037	***A 01N 25/04***
	A 01G 13/02
	A 01N 25/30
	A 01N 25/34
	A 01N 43/40
	A 01N 47/40
	A 01N 47/44
	A 01N 51/00
	A 01P 3/00
	A 01P 7/04
EP 2322150	***A 61K 31/00***
	A 61K 31/401
	A 61K 31/4196
	A 61P 3/10
	A 61K 31/415
	A 61P 3/00
	G 01N 33/58
	G 01N 33/566
	C 12N 15/12

Број објаве европске пријаве патента	(51)
EP 2322151	***A 61K 31/00***
	A 61K 31/401
	A 61K 31/4196
	A 61K 31/415
	A 61P 3/10
	A 61P 3/00
	G 01N 33/58
	G 01N 33/566
	C 12N 15/12
	A 61K 9/52
	A 61K 9/22
	A 61K 9/00
EP 2322152	***A 61K 31/00***
	A 61K 31/401
	A 61K 31/4196
	A 61P 3/10
	A 61K 31/415
	A 61P 3/00
	G 01N 33/58
	G 01N 33/566
	C 12N 15/12
EP 2322156	***A 61K 31/00***
	A 61K 31/401
	A 61K 31/4196
	A 61K 31/415
	A 61P 3/10
	A 61P 3/00
	G 01N 33/58
	G 01N 33/566
	C 12N 15/12

Број објаве европске пријаве патента	(51)
EP 2322157	***A 61K 31/00***
	A 61K 31/401
	A 61K 31/4196
	A 61K 31/415
	A 61P 3/10
	A 61P 3/00
	G 01N 33/58
	G 01N 33/566
	C 12N 15/12
EP 2322162	***A 61K 31/135***
	A 61K 31/55
	A 61P 3/04
EP 2322223	***A 61K 45/00***
	A 61K 31/427
	A 61K 31/519
	A 61K 31/52
	A 61P 25/06
EP 2322235	***A 61L 29/16***
	A 61L 31/16
EP 2322581	***C 09C 1/02***
	C 01F 5/24
EP 2322585	***C 09J 201/00***
	C 09J 7/00
	H 01B 1/22
	H 01L 21/60
	H 05K 1/14

ИНДЕКС ОБЈАВЉЕНИХ ЗАХТЕВА ЗА ПРОШИРЕЊЕ ЕВРОПСКИХ ПРИЈАВА ПАТЕНАТА ПРЕМА ПОДНОСИОЦИМА ПРИЈАВЕ

(71)	(51)	Broj objave evropske prijave patenta	(54)
4a Technologies, US	***C 10L 5/40***	EP 2321390*	MODULARIZED SYSTEM AND METHOD FOR UREA PRODUCTION USING A BIO-MASS FEEDSTOCK
5-7 Corporation Limited, CN	***A 61C 8/00*** ***A 61C 13/00***	EP 2127613	ARTIFICAL TEETHRIDGE AND FANG
77 Elektronika Müszeripari Kft., HU	***G 01N 21/47*** ***G 01N 21/86*** ***G 01N 21/27***	EP 2300804*	OPTICAL MEASURING UNIT AND METHOD FOR CARRYING OUT A REFLECTIVE MEASUREMENT
A.L.M. Holding Company, US	***C 08L 95/00*** ***C 10C 3/00***	EP 2310460*	PROCESS FOR COLD-IN-PLACE RECYCLING USING FOAMED ASPHALT AND LUBRICATION ADDITIVE
Aarhus Universitet,DK;	***C 12Q 1/68***	EP 2305837	Method for diagnosis and treatment of a mental disease
Abbott Biotherapeutics Corp., US	***A 61K 39/395*** ***C 07K 16/28*** ***A 61P 35/00*** ***A 61P 37/00*** ***C 12N 5/20***	EP 2301576	Therapeutic use of Anti-CS1 Antibodies
Abbott Biotherapeutics Corp., US	***C 07K 16/28*** ***A 61K 39/395*** ***A 61P 25/28*** ***A 61P 37/00***	EP 2318437*	METHOD FOR TREATING MULTIPLE SCLEROSIS PATIENTS WITH ANTI-IL2R ANTIBODIES
Abbott Healthcare Products B.V., NL	***A 61K 9/46*** ***A 61K 31/4178*** ***A 61K 31/549*** ***A 61P 9/04*** ***A 61P 9/12*** ***A 61P 13/12***	EP 2317987*	EPROSARTAN COMPOSITIONS
ABBOTT LABORATORIES, US	***A 01N 43/58*** ***A 61K 31/50*** ***A 61K 31/495*** ***C 07D 237/32*** ***C 07D 403/10*** ***C 07D 403/12*** ***C 07D 403/14***	EP 2120579*	INHIBITORS OF POLY(ADP-RIBOSE)POLYMERASE
Abbott Laboratories, US	***C 07K 16/46*** ***C 07K 16/20*** ***C 12P 21/08***	EP 2297208*	DUAL VARIABLE DOMAIN IMMUNOGLOBULINS AND USES THEREOF
Abbott Laboratories, US	***C 07K 16/46*** ***C 07K 16/20*** ***C 12P 21/08***	EP 2297209*	DUAL VARIABLE DOMAIN IMMUNOGLOBULINS AND USES THEREOF
Abbott Laboratories, US	***A 01N 43/42***	EP 2299821*	NOVEL TRICYCLIC COMPOUNDS
Abbott Products GmbH, DE	***A 61K 9/28*** ***A 61K 9/48*** ***A 61K 31/55***	EP 2268270*	IMPROVED FORMULATIONS FOR POORLY PERMEABLE ACTIVE PHARMACEUTICAL INGREDIENTS
Accentu8 Novotecnica Pty Ltd, AU	***A 61C 13/01*** ***A 61C 13/36*** ***A 61C 13/38*** ***A 61C 19/04***	EP 2306923*	DENTURES, DENTAL ARCHES AND METHODS OF MANUFACTURE

(71)	(51)	Broj objave evropske prijave patenta	(54)
ADC GmbH, DE	***H 01Q 1/14***	EP 2313943*	DISTRIBUTOR CONNECTION MODULE FOR TELECOMMUNICATIONS AND DATA TECHNOLOGY
ADC GmbH, DE	***H 02B 1/38*** ***E 05D 11/00***	EP 2316154*	HOUSING HAVING A BURGLAR-PROOF DOOR HINGE
ADC GmbH,DE;	***H 02B 1/50***	EP 2132843*	DISTRIBUTION CABINET COMPRISING A PLURALITY OF INNER BODIES
Affiris AG, AT	***A 61K 38/08*** ***A 61P 25/16*** ***A 61P 25/28*** ***C 07K 16/18***	EP 2310032*	COMPOUNDS FOR TREATING SYMPTOMS ASSOCIATED WITH PARKINSON'S DISEASE
Affiris AG, AT	***A 61K 38/08*** ***A 61P 25/16*** ***A 61P 25/28*** ***C 07K 16/18***	EP 2310033*	COMPOUNDS FOR TREATING AMYLOIDOSES
Affiris AG, AT	***A 61K 38/08*** ***C 07K 16/18*** ***A 61P 27/16*** ***A 61P 25/28***	EP 2310034*	COMPOUNDS FOR TREATING BETA-AMYLOIDOSES
AIR LIQUIDE WELDING FRANCE, FR	***B 65D 85/04*** ***B 65D 5/60***	EP 2230194	Packaging for a plurality of coils of feedwire
Ajinomoto Co., JP	***C 07D 217/06*** ***A 61K 31/4545*** ***A 61K 31/4725*** ***A 61K 31/55*** ***A 61M 1/36*** ***A 61P 7/04*** ***C 07D 401/12*** ***C 07D 401/14***	EP 2311810	AMIDINE DERIVATIVE
Alberici S.p.A., IT	***G 07D 3/12***	EP 2230646	Coin dispenser device
ALIZE PHARMA, FR	***A 61K 38/25*** ***A 61P 9/00*** ***A 61P 17/00***	EP 2310041*	UNACYLATED GHRELIN AND ANALOGS AS THERAPEUTIC AGENTS FOR VASCULAR REMODELING IN DIABETIC PATIENTS AND TREATMENT OF CARDIOVASCULAR DISEASE
Almirall Hermal GmbH, DE	***A 61K 9/06*** ***A 61K 31/196*** ***A 61K 31/513*** ***A 61K 31/60*** ***A 61P 17/12***	EP 2315581*	TOPICAL COMPOSITION FOR THE TREATMENT OF ACTINIC KERATOSIS
Almirall, ES	***A 61K 31/519*** ***A 61K 31/455*** ***A 61P 35/00***	EP 2296663*	COMBINATIONS COMPRISING METHOTREXATE AND DHODH INHIBITORS
ALSTOM Transport SA, FR	***B 61C 5/00*** ***B 61C 17/04***	EP 2003037	Device for attaching a drive system to the chassis of a self-propelled vehicle and self-propelled vehicle comprising such a device
Altbart, AT	***E 04H 3/12***	EP 2224076	Stand
Ambrilia Biopharma Inc., CA	***C 07C 311/00***	EP 2064177*	PROTEASE INHIBITORS
Amgen Inc., US	***A 61K 38/48***	EP 2296694*	NEUTRALIZING PROPROTEIN CONVERTASE SUBTILISIN KEXIN TYPE 9 (PCSK9) VARIANTS AND USES THEREOF

(71)	(51)	Broj objave evropske prijave patenta	(54)
Amgen Inc., US	***C 07K 16/22*** ***A 61K 39/395***	EP 2307456*	ANG-2 INHIBITION TO TREAT MULTIPLE SCLEROSIS
Amgen Inc., US	***C 07D 471/04*** ***A 61K 31/4192*** ***A 61P 35/00***	EP 2310389*	HETEROCYCLES AS PROTEIN KINASE INHIBITORS
Amgen Inc., US	***C 07D 213/82*** ***C 07D 233/88*** ***C 07D 407/08*** ***C 07D 413/12*** ***C 07D 417/12*** ***C 07D 471/04*** ***C 07D 471/10*** ***C 07D 487/04*** ***C 07D 487/06*** ***C 07D 487/10*** ***C 07D 487/16*** ***C 07D 491/10*** ***C 07D 495/10*** ***A 61K 31/506*** ***A 61K 31/404***	EP 2315751*	ALKYNYL ALCOHOLS AS KINASE INHIBITORS
Amgen Inc., US	***C 07D 401/12*** ***C 07D 403/12*** ***C 07D 403/14*** ***A 61K 31/506*** ***A 61P 35/00***	EP 2321298*	AURORA KINASE MODULATORS AND METHODS OF USE
Amgen, US	***C 07K 16/24*** ***C 12N 15/13*** ***A 61K 39/395***	EP 2236519	Human GM-CSF antigen binding proteins
Amgen, US	***C 07K 16/26*** ***A 61K 39/395*** ***A 61K 38/18*** ***A 61P 7/06*** ***A 61P 3/12***	EP 2294087*	ANTI-HEPCIDIN ANTIBODIES AND METHODS OF USE
Amgen, US	***A 61K 38/18*** ***C 07K 14/50***	EP 2296690*	FGF21 MUTANTS AND USES THEREOF
Amgen, US	***C 07D 277/42***	EP 2303854*	PROCESS FOR MAKING SUBSTITUTED 2-AMINO-THIAZOLONES
Amgen, US	***C 07D 401/04*** ***C 07D 401/14*** ***C 07D 471/04*** ***A 61K 31/498*** ***A 61K 31/502*** ***A 61K 31/4709*** ***A 61P 35/00***	EP 2307400*	INHIBITORS OF PI3 KINASE
Amgen, US	***C 07D 277/54***	EP 2321290*	ASYMMETRIC PROCESS FOR MAKING SUBSTITUTED 2-AMINO-THIAZOLONES
Amira Pharmaceuticals, US	***C 07C 323/57*** ***C 07C 321/20*** ***A 61K 31/167*** ***A 61K 31/10*** ***A 61P 11/00*** ***A 61P 37/08***	EP 2307362*	ANTAGONISTS OF PROSTAGLANDIN D2 RECEPTORS

(71)	(51)	Broj objave evropske prijave patenta	(54)
Amira Pharmaceuticals, US	***C 07D 487/04*** ***C 07D 487/02*** ***A 61K 31/445*** ***A 61P 11/00*** ***A 61P 29/00***	EP 2310392*	TRICYCLIC ANTAGONISTS OF PROSTAGLANDIN D2 RECEPTORS
Amira Pharmaceuticals,US;	***C 07D 209/88*** ***C 07D 209/82*** ***A 61K 31/403*** ***A 61P 9/06***	EP 2300425*	CYCLOALKANE[B]INDOLE ANGTAGONISTS OF PROSTAGLANDIN D2 RECEPTORS
Amphenol-Tuchel Electronics GmbH, DE	***H 01R 4/48*** ***H 01R 13/24*** ***H 01R 12/22***	EP 2230724	Contact with optimised tension
Amphenol-Tuchel Electronics GmbH, DE	***H 01R 13/24*** ***H 01R 13/33*** ***H 01R 43/16*** ***H 01R 12/04*** ***H 01R 12/22***	EP 2237378	Contact device
Amsterdam Molecular Therapeutics (AMT) B.V., NL	***C 07K 14/015*** ***C 12N 5/10*** ***C 12N 7/04*** ***C 12N 15/864*** ***A 61K 38/16*** ***A 61K 39/23*** ***A 61K 48/00***	EP 2297185*	PARVOVIRAL CAPSID WITH INCORPORATED GLY-ALA REPEAT REGION
Anacor Pharmaceuticals, US	***C 07F 9/02***	EP 2069370*	MICROORGANISM KILLING COMPOUNDS
Ancora Pharmaceuticals Inc., US	***B 01J 19/18*** ***C 13K 13/00***	EP 2321042*	AUTOMATED OLIGOSACCHARIDE SYNTHESIZER
Anheuser-Busch InBev S.A., BE	***C 12C 11/07*** ***C 12H 1/06***	EP 2315821*	AN IMPROVED METHOD OF BREWING BEER
Anima Design S.R.L., IT	***A 61G 17/02***	EP 2303214*	EXTERNAL COVERING FOR COFFINS, SARCOPHAGI, CINERARY URNS AND THE LIKE
Anterios, US	***A 61K 9/51*** ***A 61K 31/48***	EP 2310000*	DERMAL DELIVERY
Antibioticos S.p.A., IT	***C 07D 491/22*** ***A 61K 31/4375*** ***A 61P 35/00***	EP 2189461	Crystalline irinotecan hydrochloride and methods for the preparation thereof
AOL LLC, US	***G 06Q 30/00***	EP 2297688*	ADVERTISING FORECAST AND REVENUE SYSTEMS AND METHODS
Aposcience AG, AT	***G 01N 33/569***	EP 2307885*	CELLULAR COPD DIAGNOSIS
Aposcience AG, AT	***G 01N 33/68***	EP 2307889*	COPD DIAGNOSIS
APPLE INC., US	***H 04M 1/725*** ***H 04M 3/533***	EP 2116022*	VOICEMAIL SYSTEMS AND METHODS
APPLE INC., US	***H 04M 1/725*** ***H 04M 3/533***	EP 2116023*	VOICEMAIL SYSTEMS AND METHODS
APPLE INC., US	***H 04M 3/537*** ***H 04M 1/247*** ***H 04M 1/65***	EP 2119210*	VOICEMAIL SYSTEMS AND METHODS
APPLE INC., US	***G 06F 17/30***	EP 2122513*	SYNCHRONIZATION METHODS AND SYSTEMS
APPLE INC., US	***G 09G 3/34*** ***H 05B 33/08*** ***H 05B 37/02***	EP 2122840*	BACKLIGHT AND AMBIENT LIGHT SENSOR SYSTEM

(71)	(51)	Broj objave evropske prijave patenta	(54)
Applied Magnetics, US	***H 03B 28/00*** ***G 06F 1/02***	EP 2313969*	HIGHLY PRECISE AND LOW LEVEL SIGNAL-GENERATING DRIVERS, SYSTEMS AND METHODS OF USE
ArcelorMittal - Stainless & Nickel Alloys, FR	***H 01F 1/147***	EP 2313895*	FE-CO ALLOY FOR HIGH DYNAMIC ELECTROMAGNETIC ACTUATOR
ARCELORMITTAL Construction Deutschland GmbH, DE	***E 04D 3/365***	EP 2304124*	ROOF STRUCTURE
Ardian, US	***A 61B 18/14***	EP 2206476	Apparatus, systems and methods for achieving intravascular, thermally-induced renal neuromodulation
Arena Pharmaceuticals, US	***G 01N 33/48*** ***G 01N 33/50***	EP 2313769*	5-HT6 RECEPTOR AND MODULATORS THEREOF FOR THE TREATMENT OF INSULIN-RELATED DISORDERS
Arena Pharmaceuticals, US	***A 61K 31/00*** ***A 61K 31/401*** ***A 61K 31/4196*** ***A 61P 3/10*** ***A 61K 31/415*** ***A 61P 3/00*** ***G 01N 33/58*** ***G 01N 33/566*** ***C 12N 15/12***	EP 2322150	Method of identifying GLP-1 secretagogues
Arena Pharmaceuticals, US	***A 61K 31/00*** ***A 61K 31/401*** ***A 61K 31/4196*** ***A 61K 31/415*** ***A 61P 3/10*** ***A 61P 3/00*** ***G 01N 33/58*** ***G 01N 33/566*** ***C 12N 15/12*** ***A 61K 9/52*** ***A 61K 9/22*** ***A 61K 9/00***	EP 2322151	Sustained release formulation comprising a GPR119 agonist and a DPP-IV inhibitor
Arena Pharmaceuticals, US	***A 61K 31/00*** ***A 61K 31/401*** ***A 61K 31/4196*** ***A 61P 3/10*** ***A 61K 31/415*** ***A 61P 3/00*** ***G 01N 33/58*** ***G 01N 33/566*** ***C 12N 15/12***	EP 2322152	Method of preparing a composition comprising a GPR119 agonist
Arena Pharmaceuticals, US	***A 61K 31/00*** ***A 61K 31/401*** ***A 61K 31/4196*** ***A 61K 31/415*** ***A 61P 3/10*** ***A 61P 3/00*** ***G 01N 33/58*** ***G 01N 33/566*** ***C 12N 15/12***	EP 2322156	Composition for the treatment of diabetes and conditions related thereto and for the treatment of conditions ameliorated by increasing a blood GLP-1 level

(71)	(51)	Broj objave evropske prijave patenta	(54)
Arena Pharmaceuticals, US	***A 61K 31/00*** ***A 61K 31/401*** ***A 61K 31/4196*** ***A 61K 31/415*** ***A 61P 3/10*** ***A 61P 3/00*** ***G 01N 33/58*** ***G 01N 33/566*** ***C 12N 15/12***	EP 2322157	Composition for the treatment of diabetes and conditions related thereto and for the treatment of conditions ameliorated by increasing a blood GLP-1 level
Arena Pharmaceuticals, US	***A 61K 31/135*** ***A 61K 31/55*** ***A 61P 3/04***	EP 2322162	5HT2C receptor modulator compositions and methods of use
ARISTOTLE UNIVERSITY OF THESSALONIKI-,GR;	***G 09G 3/32***	EP 2237253	Pixel circuit, display using the same and driving method for the same
Arla Foods amba, DK	***A 23L 2/00*** ***A 23J 7/00*** ***A 23L 1/29*** ***A 23C 9/00*** ***A 23G 1/00***	EP 2308324	Phosphatidylserine enriched milk fractions for the formulation of functional foods
Array Biopharma, US	***C 07D 311/04*** ***C 07D 405/12*** ***C 07D 407/12*** ***A 61K 31/353*** ***A 61P 29/00***	EP 2307397*	6-SUBSTITUTED PHENOXYCHROMAN CARBOXYLIC ACID DERIVATIVES
Array Biopharma, US	***C 07D 471/04*** ***A 61K 31/437*** ***A 61P 35/00***	EP 2307409*	PYRROLOPYRIDINES AS KINASE INHIBITORS
ARTA PLAST AB, SE	***A 61M 16/00*** ***A 61M 16/16***	EP 2319568	Device for moistening breathed air for artificial respiration
ARVEDI, IT	***B 21B 1/46***	EP 1963034*	PROCESS AND RELATED PLANT FOR PRODUCING STEEL STRIPS WITH SOLUTION OF CONTINUITY
Asahi Glass Co., JP	***A 61K 9/08*** ***A 61K 47/10*** ***A 61K 47/26*** ***A 61K 47/18*** ***A 61K 31/5575***	EP 2306977*	METHOD AND COMPOSITION FOR TREATING OCULAR HYPERTENSION AND GLAUCOMA
Ashland Licensing and Intellectual Property LLC, US	***B 32B 11/00***	EP 2315664*	MATTE SUBSTRATE

(71)	(51)	Broj objave evropske prijave patenta	(54)
Astellas Pharma Inc., JP	***C 07D 249/08*** ***A 61K 31/4196*** ***A 61K 31/42*** ***A 61K 31/422*** ***A 61K 31/4245*** ***A 61K 31/427*** ***A 61K 31/4439*** ***A 61K 31/496*** ***A 61K 31/506*** ***A 61K 31/5377*** ***A 61K 31/541*** ***A 61P 3/04*** ***A 61P 3/06*** ***A 61P 3/10*** ***A 61P 9/12*** ***A 61P 19/10*** ***A 61P 25/28*** ***A 61P 27/06*** ***A 61P 43/00***	EP 2298747	TRIAZOLE DERIVATIVE OR SALT THEREOF
Astellas Pharma Inc., JP	***C 07D 401/04/*** ***C 07C 311/21*** ***A 61K 31/341*** ***A 61K 31/426*** ***A 61K 31/427*** ***A 61K 31/4402*** ***A 61K 31/4406*** ***A 61K 31/443*** ***A 61K 31/4439*** ***A 61K 31/497*** ***A 61K 31/501*** ***A 61K 31/506*** ***A 61P 13/02*** ***A 61P 13/08*** ***A 61P 13/10*** ***A 61P 43/00*** ***C 07D 213/71*** ***C 07D 277/20*** ***C 07D 277/36*** ***C 07D 277/56*** ***C 07D 307/64***	EP 2305641	SULFONAMIDE COMPOUND OR SALT THEREOF
Astellas Pharma Inc., JP	***C 07D 405/12*** ***C 07D 401/14*** ***A 61P 25/04*** ***A 61P 43/00*** ***C 07D 413/14*** ***C 07D 417/14*** ***A 61K 31/4545***	EP 2308869	AZOLE COMPOUND

(71)	(51)	Broj objave evropske prijave patenta	(54)
Astex Therapeutics Limited, GB	***C 07D 471/04*** ***C 07D 513/04*** ***A 61P 35/00*** ***A 61K 31/437*** ***A 61K 31/506*** ***A 61K 31/501*** ***A 61K 31/53*** ***A 61K 31/444*** ***A 61K 31/497*** ***A 61K 31/496*** ***A 61K 31/4545***	EP 2300465*	IMIDAZOPYRIDINE DERIVATIVES AS INHIBITORS OF RECEPTOR TYROSINE KINASES
AstraZeneca AB, SE	***C 07D 417/14*** ***C 07D 498/06*** ***A 61P 31/04*** ***A 61K 31/4709*** ***A 61K 31/4738***	EP 2300463*	HETEROCYCLIC UREA DERIVATIVES FOR THE TREATMENT OF BACTERIAL INFECTIONS
AstraZeneca AB, SE	***A 61K 31/517*** ***A 61P 35/00***	EP 2303276*	FUMARATE SALT OF 4- (3-CHLORO-2-FLUOROANILINO) -7-METHOXY-6- { [1-(N-METHYLCARBAMOYLMETHYL) PIPERIDIN- 4-YL]OXY}QUINAZOLINE
AstraZeneca AB, SE	***C 07D 401/12*** ***C 07D 401/14*** ***C 07D 405/14*** ***C 07D 413/14*** ***A 61K 31/4439*** ***A 61P 35/00***	EP 2303861*	PYRIDINE COMPOUNDS
AstraZeneca AB, SE	***C 07D 413/10*** ***A 61K 31/422*** ***A 61P 25/00*** ***C 07D 209/46***	EP 2303872*	ISOXAZOLE DERIVATIVES AND THEIR USE AS METABOTROPIC GLUTAMATE RECEPTOR POTENTIATORS
AstraZeneca AB, SE	***C 07D 413/12*** ***A 61K 31/538*** ***A 61P 11/00*** ***C 07D 231/12***	EP 2303873*	BENZOXAZINONE DERIVATIVES ACTING AS BETA2-ADRENORECEPTOR AGONIST FOR THE TREATMENT OF RESPIRATORY DISORDERS
AstraZeneca AB, SE	***C 07D 471/04*** ***A 61K 31/519*** ***A 61P 35/00***	EP 2303875*	COMPOSITIONS WITH AND PROCESS FOR METHYLMORPHOLIN-SUBSITUTED PYRIDO[2,3-D]PYRIMIDINES
AstraZeneca AB, SE	***C 07D 281/16*** ***A 61K 31/554*** ***A 61P 25/18*** ***A 61P 25/24***	EP 2307389*	DIBENZOTHIAZEPINE DERIVATIVES AND USE THEREOF
AstraZeneca AB, SE	***A 61K 31/426*** ***A 61K 31/427*** ***A 61P 35/00*** ***C 07D 277/34***	EP 2310010*	CHEMICAL COMPOUNDS 251
AstraZeneca AB, SE	***C 07D 413/14*** ***A 61K 31/345*** ***A 61P 31/04***	EP 2313402*	HETEROCYCLIC UREA DERIVATIVES AND METHODS OF USE THEREOF
AstraZeneca AB, SE	***C 07D 403/12*** ***A 61K 31/4155*** ***A 61K 31/422*** ***A 61P 7/02*** ***C 07D 405/14*** ***C 07D 413/12***	EP 2321301*	NEW HETEROCYCLIC CARBOXAMIDES FOR USE AS THROMBIN INHIBITORS

(71)	(51)	Broj objave evropske prijave patenta	(54)
AstraZeneca AB,SE;	***C 07D 453/02*** ***A 61K 31/439*** ***A 61P 11/00***	EP 2300464*	QUINUCLIDINE DERIVATIVES AS MUSCARINIC M3 RECEPTOR ANTAGONISTS
Athenix Corporation, US	***C 07K 14/325*** ***C 12N 15/82***	EP 2297189*	TOXIN GENES AND METHODS FOR THEIR USE
Athenix Corporation, US	***C 07K 14/325*** ***C 12N 15/82***	EP 2297190*	AXMI-115, AXMI-113, AXMI-005, AXMI-163 AND AXMI-184: VIP3A INSECTICIDAL PROTEINS FROM BACILLUS THURINGIENSIS AND METHODS FOR THEIR USE
ATI Technologies Inc., CA	***G 06T 15/00***	EP 2296115	A graphics processing architecture employing a unified shader
ATI Technologies Inc., CA	***G 06T 15/00***	EP 2296116	A graphics processing architecture employing a unified shader
ATI Technologies Inc., CA	***G 06T 15/00*** ***G 06T 15/80***	EP 2299408	A graphics processing architecture employing a unified shader
ATI Technologies ULC, CA	***G 06T 15/00*** ***G 06T 15/80***	EP 2309460	A graphics processing architecture employing a unified shader
Autoequip Lavaggi S.p.A., IT	***B 60S 3/06***	EP 2181902	Double-gantry car wash installation, and corresponding method
Auxitel Spa, IT	***H 04Q 1/14***	EP 2294831*	IMPROVEMENTS TO AN ACTUATOR MODULE DESIGNED FOR INTERCEPTING THE PAIRS OF METAL TELEPHONE CONDUCTORS ALREADY TERMINATED IN TELEPHONE EXCHANGES
Avganim, IL	***E 05B 73/00***	EP 2313586*	ANTI-THEFT DEVICES FOR PORTABLE OBJECTS SUCH AS LAPTOPS
Avid Radiopharmaceuticals, US	***A 61B 5/055*** ***A 61B 6/03*** ***A 61K 49/00*** ***G 01T 1/161*** ***G 01T 1/164*** ***G 01T 1/29***	EP 2303114*	RADIOPHARMACEUTICAL IMAGING OF NEURODEGENERATIVE DISEASES
Aware, US	***H 04L 5/00***	EP 2321925*	TRANSMIT PSD CEILING IN PACKET-BASED OFDM SYSTEMS
Azourite Ventures, CY	***B 41M 5/025*** ***B 41M 5/035*** ***B 41M 5/52***	EP 2236307	Production of transfer paper for inkjet printing
B&B Exporting Limited, CN	***A 44C 5/20*** ***G 09F 3/16***	EP 2301374	Kid identification wristband
Balzer, DE	***B 66F 7/28***	EP 2223883	Assembly and repair device
BASF Plant Science GmbH, DE	***C 07K 14/415*** ***C 12N 15/82*** ***A 01H 5/00***	EP 2297192*	PLANTS HAVING ENHANCED YIELD-RELATED TRAITS AND A METHOD FOR MAKING THE SAME BY OVEREXPRESSING A POLYNUCLEOTIDE ENCODING A TFL1-LIKE PROTEIN
BASF SE, DE	***C 12N 15/52*** ***C 12P 13/08*** ***C 12N 9/16***	EP 1939296	Methods for the preparation of a fine chemical by fermentation

(71)	(51)	Broj objave evropske prijave patenta	(54)
BASF SE, DE	***C 08K 5/21*** ***C 08K 5/053*** ***C 08L 61/28*** ***C 08L 61/24*** ***C 08K 5/3412*** ***C 08J 5/24*** ***C 08G 12/38*** ***C 08G 12/42***	EP 2216363	Aqueous, modified melamine resin mixture, method for producing same and use of same to saturate absorbent carriers and compound material produced using the melamine resin material
BASF SE, DE	***D 01F 9/127*** ***D 01F 9/16*** ***C 01B 31/02*** ***B 01J 37/08*** ***B 01J 21/18***	EP 2224045	Process for producing carbon nanofibres and/or carbon nanotubes
BASF SE, DE	***B 01J 21/18*** ***B 01J 23/755*** ***B 01J 23/881*** ***B 01J 37/02*** ***B 01J 37/08*** ***C 01B 31/00***	EP 2233207	Process for the preparation of metal-carbon containing bodies
BASF SE, DE	***A 01N 43/56*** ***A 01P 3/00*** ***A 01P 7/04*** ***A 01N 37/38*** ***A 01N 37/46*** ***A 01N 37/50*** ***A 01N 43/36*** ***A 01N 43/54*** ***A 01N 43/653*** ***A 01N 47/02*** ***A 01N 47/24*** ***A 01N 47/26*** ***A 01N 47/34*** ***A 01N 47/38***	EP 2240027*	PLANT HEALTH COMPOSITION
BASF SE, DE	***A 01N 43/56*** ***A 01P 3/00*** ***A 01P 7/04*** ***A 01N 35/04*** ***A 01N 37/20*** ***A 01N 37/24*** ***A 01N 37/36*** ***A 01N 37/38*** ***A 01N 37/46*** ***A 01N 37/50*** ***A 01N 37/52*** ***A 01N 41/06*** ***A 01N 43/30*** ***A 01N 43/32*** ***A 01N 43/36***	EP 2242366*	PLANT HEALTH COMPOSITION
BASF SE, DE	***A 01N 35/04*** ***A 01N 43/653***	EP 2259675*	FUNGICIDAL COMPOSITIONS COMPRISING 3'-BROMINE-2,3,4,6'-TETRAMETHOXY-2'-6-DIMETHYLBENZOPHENONE

(71)	(51)	Broj objave evropske prijave patenta	(54)
BASF SE, DE	***A 01P 13/00*** ***A 01N 43/10*** ***A 01N 43/40*** ***A 01N 43/56*** ***A 01N 43/78*** ***A 01N 43/82*** ***A 01N 57/14*** ***A 01N 37/22*** ***A 01N 37/24*** ***A 01N 37/26***	EP 2296480*	HERBICIDAL COMPOSITIONS COMPRISING 4-AMINO-3,6-DICHLOROPYRIDINE-2-CARBOXYLIC ACID
BASF SE, DE	***C 07D 417/06*** ***C 07D 417/14*** ***A 01N 43/80***	EP 2303874*	SULFONAMIDE COMPOUNDS
BASF SE, DE	***A 01N 43/56*** ***A 01P 3/00*** ***A 01N 31/14*** ***A 01N 37/02*** ***A 01N 37/28*** ***A 01N 37/38*** ***A 01N 37/40*** ***A 01N 37/42*** ***A 01N 37/44*** ***A 01N 41/02*** ***A 01N 41/10*** ***A 01N 43/08*** ***A 01N 43/22*** ***A 01N 43/24*** ***A 01N 43/28***	EP 2306834*	FUNGICIDAL MIXTURES COMPRISING SUBSTITUTED 1-METHYLPYRAZOL-4-YLCARBOXANILIDES
Baumaschinentechnik Gesellschaft m.b.H., AT	***E 02F 3/36*** ***E 02F 9/22***	EP 2233642	Quick coupler for construction machines
Bavarian Nordic A/S, DK	***A 61K 39/165*** ***C 12N 15/863*** ***C 07K 14/12*** ***C 12N 7/01*** ***C 12N 5/22***	EP 2303322*	RECOMBINANT MODIFIED VACCINIA VIRUS MEASLES VACCINE
Bayer BioScience N.V., BE	***C 12Q 1/68***	EP 2318541*	METHODS FOR PLANT FIBER CHARACTERIZATION AND IDENTIFICATION
Bayer Schering Pharma Aktiengesellschaft, DE	***C 07C 233/88*** ***C 07C 309/66*** ***C 07F 7/18***	EP 2064176*	PHENYLOXYANILINE DERIVATIVES
Bayer Schering Pharma Aktiengesellschaft, DE	***C 07J 53/00*** ***A 61K 31/58*** ***A 61P 5/34*** ***A 61P 5/42*** ***A 61P 5/28***	EP 2297177*	C-RING-SUBSTITUTED PREGN-4-ENE-21,17-CARBOLACTONE, AND PHARMACEUTICAL PREPARATIONS COMPRISING THE LATTER
Bayer Schering Pharma Aktiengesellschaft, DE	***C 07D 209/10*** ***C 07D 209/12*** ***C 07D 209/18*** ***C 07D 405/06*** ***C 07D 409/06*** ***A 61K 31/404*** ***A 61P 9/00***	EP 2300423*	SUBSTITUTED 7-SULFANYLMETHYL, 7-SULFINYLMETHYL AND 7-SULFONYLMETHYL INDOLES AND USE THEREOF

(71)	(51)	Broj objave evropske prijave patenta	(54)
Bayer Schering Pharma Aktiengesellschaft, DE	***C 07J 71/00*** ***A 61K 31/58*** ***A 61P 5/30***	EP 2307439*	ESTRATRIENE DERIVATIVES COMPRISING HETEROCYCLIC BIOISOSTERES FOR THE PHENOLIC A-RING
Baylor Research Institute, US	***C 07K 16/28*** ***A 61K 39/395*** ***A 61P 37/06***	EP 2297204*	ANTI-CD8 ANTIBODIES BLOCK PRIMING OF CYTOTOXIC EFFECTORS AND LEAD TO GENERATION OF REGULATORY CD8+T CELLS
Baylor Research Institute, US	***A 61K 39/12*** ***A 61P 31/12*** ***A 61P 3/10*** ***A 61P 19/02***	EP 2307047*	RESPIRATORY SYNCYTIAL VIRUS RENDERS DENDRITIC CELLS TOLEROGENIC
Baylor Research Institute, US	***A 61K 39/12*** ***A 61K 39/395***	EP 2307048*	HIV VACCINE BASED ON TARGETING MAXIMIZED GAG AND NEF TO DENDRITIC CELLS
Baylor Research Institute,US;	***G 01N 33/50*** ***G 01N 33/53*** ***C 12Q 1/00***	EP 2300823*	BLOOD TRANSCRIPTIONAL SIGNATURE OF MYCOBACTERIUM TUBERCULOSIS INFECTION
Bege Privatstiftung, AT	***A 41G 5/00***	EP 2022357	Hair strip for hair extension and thickening
Bellicoso, IT	***F 16D 65/06***	EP 2315965*	BLOCK FOR BRAKE WITH RELIEF GROOVES
Bencherif, US	***A 61K 31/13*** ***A 61K 31/4545*** ***A 61K 31/439*** ***A 61K 31/506*** ***A 61K 45/06*** ***A 61P 27/02***	EP 2296640*	METHODS FOR PREVENTING THE DEVELOPMENT OF RETINOPATHY BY THE ORAL ADMINISTRATION OF NNR LIGANDS
Bent Neubauer Holding ApS, DK	***G 07C 5/02*** ***G 01C 19/00***	EP 2313869*	ELECTRONIC PARKING DISC COMPRISING MOVEMENT DETECTION MEANS
Berthold Sichert GmbH, DE	***H 02B 1/50***	EP 2132843*	DISTRIBUTION CABINET COMPRISING A PLURALITY OF INNER BODIES
Bilias, GR	***G 07F 17/20***	EP 2297713*	AUTOMATIC COIN - OPERATED OR ELECTRONIC CARD - OPERATED WASHING MACHINE AND DRYER FOR HELMETS
Bind Biosciences, US	***A 61K 9/16*** ***A 61K 47/34*** ***A 61K 33/24*** ***A 61K 31/337***	EP 2309989*	DRUG LOADED POLYMERIC NANOPARTICLES AND METHODS OF MAKING AND USING SAME
Bind Biosciences, US	***A 61K 9/16*** ***A 61K 47/16*** ***A 61K 47/34*** ***A 61K 31/337***	EP 2309990*	DRUG LOADED POLYMERIC NANOPARTICLES AND METHODS OF MAKING AND USING SAME
Bind Biosciences, US	***A 61K 9/16*** ***A 61K 31/475*** ***A 61K 47/34*** ***A 61P 35/00***	EP 2309991*	THERAPEUTIC POLYMERIC NANOPARTICLES COMPRISING VINCA ALKALOIDS AND METHODS OF MAKING AND USING SAME
Bintz, US	***A 61K 38/18*** ***A 61K 38/20*** ***A 61K 8/64*** ***A 61P 17/02*** ***A 61Q 19/00***	EP 2318034*	WOUND HEALING

(71)	(51)	Broj objave evropske prijave patenta	(54)
BIOCRYST PHARMACEUTICALS, US	***C 07D 491/04***	EP 2313416*	SYNTHETIC INTERMEDIATES AND PROCESSES
Biogen Idec MA Inc., US	***C 07K 16/28*** ***A 61K 39/395***	EP 2315779*	COMPOSITIONS COMPRISING ANTIBODIES TO LINGO OR FRAGMENTS THEREOF
BioInvent International AB, SE	***C 07K 16/18*** ***A 61K 39/395*** ***A 61K 39/00*** ***A 61P 9/10*** ***A 61K 31/33*** ***G 01N 33/68*** ***G 01N 33/53*** ***C 07K 14/775***	EP 2319868	Immunotherapeutic treatment for inducing the regression of atherosclerotic plaques
BioMarin IGA Limited, BS	***A 61K 31/437*** ***A 61P 21/00*** ***C 07D 471/04***	EP 2293793*	2,5-DISUBSTITUTED IMIDAZO[4,5-C]PYRIDINES FOR TREATING MUSCULAR DYSTROPHY
Biomod Concepts Inc., CA	***A 61K 9/16*** ***A 61K 47/44*** ***A 61K 8/92*** ***A 61K 9/00*** ***A 61L 15/22*** ***A 61L 15/34*** ***A 61L 15/42*** ***A 61M 37/00*** ***A 61P 17/00*** ***A 61Q 19/00*** ***D 06M 16/00*** ***A 41D 19/00***	EP 2317984*	ARTICLES OF MANUFACTURE RELEASING AN ACTIVE INGREDIENT
Bionomics Limited, AU	***C 07D 263/54*** ***A 61K 31/423*** ***A 61K 31/4439*** ***A 61K 31/454*** ***A 61K 31/496*** ***A 61K 31/5377*** ***A 61K 31/541*** ***A 61P 29/00*** ***A 61P 37/00*** ***A 61P 37/06*** ***C 07D 263/56*** ***C 07D 413/12***	EP 2303850*	NOVEL POTASSIUM CHANNEL BLOCKERS AND USES THEREOF
Bio-Rad Pasteur, FR	***C 07K 14/58*** ***G 01N 33/68***	EP 2303922*	METHOD FOR THE IN VITRO DIAGNOSIS OF STROKE
Bioring SA en liquidation, CH	***B 29C 45/00*** ***A 61L 31/06***	EP 2293914*	METHOD FOR MOULDING POLY(1,4-DIOXANONE)
Biotie Therapies Corp., FI	***C 07D 489/08*** ***A 61K 31/485*** ***A 61P 25/30***	EP 2300479*	NALMEFENE HYDROCHLORIDE DIHYDRATE
Biovascular, US	***A 61K 9/20*** ***A 61K 38/17*** ***A 61L 27/22*** ***C 07D 487/04***	EP 2306985*	CONTROLLED RELEASE COMPOSITIONS OF AGENTS THAT REDUCE CIRCULATING LEVELS OF PLATELETS AND METHODS THEREFOR

(71)	(51)	Broj objave evropske prijave patenta	(54)
Bispebjerg Hospital,DK;	***A 61K 9/00*** ***A 61K 47/12*** ***A 61F 13/00*** ***A 61L 2/00*** ***A 61K 9/08***	EP 2306972*	ACETIC ACID AND A BUFFER
Blücher Systems GmbH, DE	***B 01J 21/06*** ***B 01J 21/18*** ***B 01J 37/08*** ***H 01M 4/00***	EP 2318130*	PROCESS FOR PRODUCING CARBON SUBSTRATES LOADED WITH METAL OXIDES AND CARBON SUBSTRATES PRODUCED IN THIS WAY
BMA Nederland B.V., NL	***F 28B 3/04*** ***A 23N 7/00*** ***F 28B 11/00***	EP 2309218	Recovery of heat from recurring charges of vapour
Board of Regents, US	***C 07D 211/34*** ***C 07D 211/90*** ***A 61K 31/4402*** ***A 61P 35/00***	EP 2307367*	NOVEL INHIBITORS OF PROLIFERATION AND ACTIVATION OF SIGNAL TRANSDUCER AND ACTIVATOR OF TRANSCRIPTION (STATS)
Board of Regents, US	***A 61K 31/70*** ***A 61P 35/00*** ***A 61K 31/7012***	EP 2310020*	NOVEL ACETATES OF 2-DEOXY MONOSACCHARIDES WITH ANTICANCER ACTIVITY
Boehringer Ingelheim International GmbH, DE	***A 61K 31/496*** ***A 61K 31/519*** ***A 61P 35/00*** ***A 61P 3/10*** ***A 61P 17/06*** ***A 61P 19/02*** ***A 61P 25/02*** ***A 61P 9/00*** ***A 61P 11/06*** ***A 61P 27/02*** ***A 61P 1/16*** ***A 61P 43/00***	EP 2293795*	PHARMACEUTICAL COMBINATION
Boehringer Ingelheim International GmbH, DE	***A 61K 9/00*** ***A 61K 31/517*** ***A 61P 35/00*** ***A 61K 9/16*** ***A 61K 9/20***	EP 2299971*	SOLID PHARMACEUTICAL FORMULATIONS COMPRISING BIBW 2992
Boehringer Ingelheim International GmbH, DE	***A 61K 9/48*** ***A 61K 9/10*** ***A 61K 47/14*** ***A 61K 47/24*** ***A 61K 47/44*** ***A 61K 31/404***	EP 2299987*	CAPSULE PHARMACEUTICAL DOSAGE FORM COMPRISING A SUSPENSION FORMULATION OF AN INDOLINONE DERIVATIVE
Boehringer Ingelheim International GmbH, DE	***C 07D 413/10*** ***C 07D 413/14*** ***A 61K 31/5355*** ***A 61P 19/10***	EP 2300461*	CYCLIC INHIBITORS OF 11BETA-HYDROXYSTEROID DEHYDROGENASE 1
Boehringer Ingelheim International GmbH, DE	***C 07D 487/04*** ***A 61K 31/519***	EP 2300478*	1-HETEROCYCLYL-1,5-DIHYDRO-PYRAZOLO[3,4-D]PYRIMIDIN-4-ONE DERIVATIVES AND THEIR USE AS PDE9A MODULATORS

(71)	(51)	Broj objave evropske prijave patenta	(54)
Boehringer Ingelheim International GmbH, DE	***A 61K 31/40*** ***A 61K 31/4025*** ***A 61K 31/403*** ***A 61K 31/4375*** ***A 61K 31/4439*** ***A 61K 31/4985*** ***A 61K 31/5025*** ***A 61K 31/506*** ***A 61K 31/513*** ***A 61K 31/522*** ***A 61P 1/16*** ***A 61P 21/00***	EP 2303262*	DPP-IV INHIBITORS FOR USE IN THE TREATMENT OF NAFLD
Boehringer Ingelheim International GmbH, DE	***A 61K 9/48*** ***A 61K 9/10*** ***A 61K 47/14*** ***A 61K 47/24*** ***A 61K 47/44*** ***A 61K 31/404***	EP 2313087*	PHARMACEUTICAL DOSAGE FORM FOR IMMEDIATE RELEASE OF AN INDOLINONE DERIVATIVE
Boehringer Ingelheim International GmbH, DE	***C 07C 233/76*** ***C 07C 311/14*** ***C 07D 213/81*** ***C 07D 213/82*** ***C 07D 333/38*** ***C 07D 295/155*** ***A 61P 19/02*** ***A 61P 29/00*** ***A 61P 11/06*** ***A 61K 31/167*** ***A 61K 31/381*** ***A 61K 31/44*** ***A 61K 31/445***	EP 2314567	Inhibitors of the microsomal prostaglandin E2 synthase-1
Boehringer Ingelheim International GmbH, DE	***C 07C 229/46*** ***C 07C 233/58*** ***C 07C 233/60*** ***C 07C 255/47*** ***C 07C 259/08*** ***C 07C 261/04*** ***C 07C 271/24*** ***C 07C 62/06*** ***C 07C 62/38*** ***C 07C 69/00*** ***C 07C 69/753*** ***C 07D 217/04*** ***A 61K 31/19*** ***A 61P 3/04*** ***A 61P 3/10***	EP 2318355*	1,1'-DIADAMANTYL CARBOXYLIC ACIDS, MEDICAMENTS CONTAINING SUCH COMPOUNDS AND THEIR USE
Boehringer Ingelheim International GmbH,DE;	***C 07D 471/04*** ***A 61K 31/437*** ***A 61P 5/44*** ***A 61P 5/46***	EP 2300472*	GLUCOCORTICOID MIMETICS, METHODS OF MAKING THEM, PHARMACEUTICAL COMPOSITIONS, AND USES THEREOF
Boehringer Ingelheim International GmbH,DE;	***C 07D 239/70*** ***C 07D 495/04***	EP 2315755*	SYNTHESIS OF DIHYDROTHIENO[3,2-d]PYRIMIDINE DIOLS AND SIMILAR PYRIMIDINE DIOLS

(71)	(51)	Broj objave evropske prijave patenta	(54)
Boehringer Ingelheim Pharma GmbH & Co. KG, DE	***C 07D 471/04*** ***A 61K 31/437*** ***A 61P 5/44*** ***A 61P 5/46***	EP 2300472*	GLUCOCORTICOID MIMETICS, METHODS OF MAKING THEM, PHARMACEUTICAL COMPOSITIONS, AND USES THEREOF
Boehringer Ingelheim Pharma GmbH & Co. KG, DE	***C 07D 239/70*** ***C 07D 495/04***	EP 2315755*	SYNTHESIS OF DIHYDROTHIENO[3,2-d]PYRIMIDINE DIOLS AND SIMILAR PYRIMIDINE DIOLS
Bone Therapeutics S.A., BE	***C 12N 5/08*** ***A 61K 35/28***	EP 2297304*	HUMAN BONE-FORMING CELLS IN THE TREATMENT OF CONDITIONS AND BONE DISEASES ASSOCIATED WITH IMMUNODEFICIENCY OR IMMUNOSUPPRESSION
Bordoni,IT;	***A 61F 7/10***	EP 2313038*	ARTICLE WITH REFRESHING OR WARMING EFFECT FOR USER
Born, US	***C 01B 17/04*** ***B 01D 53/48***	EP 2303773*	COMPACT, TIERED SULFUR RECOVERY UNIT
Boson Energy Sa, SE	***C 10J 3/36*** ***C 10J 3/14*** ***C 10J 3/16*** ***C 10B 49/06*** ***C 10J 3/56*** ***C 10J 3/54***	EP 2300568*	A TWO-STAGE HIGH-TEMPERATURE PREHEATED STEAM GASIFIER
Boston Scientific Scimed, US	***A 61B 1/018*** ***A 61B 17/29*** ***A 61B 17/00*** ***A 61B 17/30*** ***A 61B 17/34***	EP 2296528*	METHODS AND DEVICES FOR ACCESSING ANATOMIC STRUCTURES
Boston Scientific Scimed, US	***A 61B 17/00***	EP 2317930*	DEVICE TO CLOSE OPENINGS IN BODY TISSUE
Bristol-Myers Squibb Company,US;	***C 07K 16/28***	EP 2321352*	COMPOSITIONS MONOVALENT FOR CD28 BINDING AND METHODS OF USE
BRUGG Rohr AG, CH	***F 16L 25/00*** ***F 16L 33/26***	EP 1783413	Arrangement for connecting the ends of a metal pipe with helical corrugations with a connecting piece
Buck-Chemie GmbH, DE	***C 11D 17/00*** ***E 03D 9/02***	EP 2213718	Coated shaped solid cleaning composition
Burcon Nutrascience (MB) Corp., CA	***C 07K 14/415*** ***A 23J 1/14*** ***A 23J 3/14*** ***A 23L 2/66*** ***C 07K 1/28*** ***C 07K 1/30*** ***C 07K 1/34***	EP 2303919*	NOVEL CANOLA PROTEIN ISOLATE
Burcon Nutrascience (MB) Corp., CA	***A 23J 1/14*** ***A 23J 3/14*** ***A 23L 1/305*** ***A 23L 2/66*** ***C 07K 1/14*** ***C 07K 14/415***	EP 2309873*	SOLUBLE CANOLA PROTEIN ISOLATE PRODUCTION

(71)	(51)	Broj objave evropske prijave patenta	(54)
Burcon Nutrascience (MB) Corp., CA	***A 23J 1/14*** ***A 23J 3/14*** ***A 23K 1/14*** ***A 23L 1/305*** ***A 23L 2/66*** ***C 07K 1/00*** ***C 07K 1/34*** ***C 07K 14/415***	EP 2320746*	SOLUBLE CANOLA PROTEIN ISOLATE PRODUCTION FROM PROTEIN MICELLAR MASS
Burcon Nutrascience (MB) Corp., CA	***A 23J 1/14*** ***A 23J 3/14*** ***A 23K 1/14*** ***A 23L 1/305*** ***C 07K 1/14*** ***C 07K 14/415***	EP 2320747*	PREPARATION OF CANOLA PROTEIN ISOLATE FROM CANOLA OIL SEEDS ("BLENDERTEIN")
BYK-Chemie GmbH, DE	***C 09D 7/02*** ***C 09D 7/12*** ***C 09D 175/04*** ***C 08G 18/28*** ***C 08G 18/32*** ***C 08G 18/48*** ***C 08G 18/71*** ***C 08G 18/76***	EP 2112205	Stable dispersion of anorganic nanoparticles
Cablecraft Motion Controls LLC, US	***F 16C 11/06*** ***F 16C 11/00***	EP 2304253*	HIGH-TEMPERATURE BEARING ASSEMBLIES AND METHODS OF MAKING THE SAME
Calloni, IT	***B 65B 43/14*** ***B 65B 43/46***	EP 2223857	Automatic machine for packaging products in fabric bags
Cammisa, US	***A 61B 17/70***	EP 2077782*	ANCHOR ASSEMBLY FOR SPINAL IMPLANT SYSTEM
Cardoz AB, SE	***A 61K 31/167*** ***A 61K 31/192*** ***A 61K 31/519*** ***A 61P 9/10*** ***A 61P 29/00*** ***A 61P 37/00***	EP 2303251*	NEW COMBINATION FOR USE IN THE TREATMENT OF INFLAMMATORY DISORDERS
Carnehammar, CH	***B 64C 27/00*** ***F 16F 15/36***	EP 2310263*	METHOD, APPARATUS AND SYSTEM FOR REDUCING VIBRATION IN A ROTARY SYSTEM OF AN AIRCRAFT, SUCH AS A ROTOR OF A HELICOPTER
Carriero,IT;	***C 07K 4/12*** ***A 61K 38/03***	EP 2230245	Peptides having pharmacological activity for treating disorders associated with altered cell migration, such as cancer
Casaproof GmbH, DE	***B 29C 65/02*** ***B 29C 65/10*** ***E 04D 1/36*** ***E 04D 13/17*** ***B 29C 65/00*** ***B 29C 65/74***	EP 2221164	Ridge and arris role with welded seam
Castle Beach, US	***A 61F 2/00***	EP 2313026*	ACTIVE DELIVERY SYSTEM FORMULATIONS
Catalyst Biosciences, US	***C 12N 9/64***	EP 2308967	Cleavage of VEGF and VEGF receptor by wildtype and mutant MT-SP1
CENT & CENT GMBH & CO. KG, DE	***B 23P 17/06*** ***B 23D 31/00*** ***E 04C 5/01***	EP 2310165*	METHOD FOR PRODUCING STEEL FIBERS

(71)	(51)	Broj objave evropske prijave patenta	(54)
Centocor Ortho Biotech Inc., US	***C 12N 5/00***	EP 2300600*	METHODS FOR IMPROVING VIABILITY AND PRODUCTIVITY IN CELL CULTURE
Centocor Ortho Biotech Inc., US	***A 01K 67/00*** ***A 61K 49/00*** ***G 01N 33/00***	EP 2303001*	METHOD FOR TESTING EFFICACY OF TREATMENT OF NEUROLOGIC DISORDERS
Certainteed Gypsum, US	***F 02G 5/00***	EP 2313634*	SYSTEM AND METHOD FOR USING BOARD PLANT FLUE GASES IN THE PRODUCTION OF SYNGAS
Chelsea Therapeutics, US	***C 07D 239/95*** ***A 61K 31/517*** ***A 61P 35/00***	EP 2300441*	CRYSTALLINE SALT FORMS OF ANTIFOLATE COMPOUNDS AND METHODS OF MANUFACTURING THEREOF
Chemagis Ltd., IL	***C 07C 46/00*** ***C 07C 46/10*** ***C 07D 213/70*** ***C 07C 50/24*** ***C 07C 50/32***	EP 2307343*	PROCESS FOR THE EPIMERIZATION OF ATOVAQUONE ISOMER, ATOVAQUONE INTERMEDIATES AND MIXTURE THEREOF
Chemagis Ltd., IL	***C 07D 213/70*** ***C 07D 213/89*** ***C 07C 46/10*** ***C 07C 50/32***	EP 2307373*	A PROCESS FOR PREPARING ATOVAQUONE AND ASSOCIATE INTERMEDIATES
Cheminova A/S, DK	***A 01N 43/80*** ***A 01N 37/20*** ***A 01P 13/00***	EP 2303022*	SYNERGISTIC HERBICIDAL COMBINATION OF CLOMAZONE AND PETHOXAMID
CHIESI FARMACEUTICI S.p.A., IT	***C 07K 14/47*** ***A 61K 39/00*** ***A 61K 39/395*** ***A 61K 38/17*** ***A 61K 38/04*** ***A 61K 38/10*** ***C 07K 7/08***	EP 2300494*	ANTI-AMYLOID IMMUNOGENIC COMPOSITIONS, METHODS AND USES
CHIESI FARMACEUTICI S.p.A., IT	***C 07D 453/02*** ***A 61K 31/439*** ***A 61P 11/00***	EP 2313404*	QUINUCLIDINE CARBONATE DERIVATIVES AND MEDICINAL COMPOSITION THEREOF
Chugai Seiyaku Kabushiki Kaisha, JP	***C 07H 19/01*** ***A 61K 31/7048*** ***A 61P 3/10*** ***C 07H 7/04*** ***C 07H 23/00***	EP 2308886	CRYSTAL OF SPIROKETAL DERIVATIVE, AND PROCESS FOR PRODUCTION THEREOF
Cliqloc GmbH, DE	***B 65D 43/02***	EP 2293990*	CLOSURE DEVICE FOR A CONTAINER
Clyde Bergemann,US;	***F 28G 15/02***	EP 2310794*	SOOTBLOWER WITH MODULAR CANOPY
CNH Belgium N.V., BE	***A 01D 43/08***	EP 2218321	A forage harvester having a blower
Cockbain, GB	***A 61K 31/20*** ***A 61K 31/202*** ***A 61P 27/00***	EP 2313092*	POLYUNSATURATED FATTY ACIDS FOR IMPROVING VISION
Coen Company, US	***F 23C 9/00***	EP 2294336*	LOW NOX BURNER
Colquhoun, GB	***G 01N 11/00*** ***G 01N 11/16***	EP 2316011*	TEST APPARATUS
Compagnie Europeenne de Developpement Industriel, FR	***F 41H 1/02***	EP 2304378*	METHOD FOR TESTING BALLISTIC PROTECTION EQUIPMENT AND ASSOCIATED DUMMY AND PROTECTION

(71)	(51)	Broj objave evropske prijave patenta	(54)
Conceptus, US	***A 61F 6/22***	EP 2299951*	OCCLUSION DEVICE AND SYSTEM FOR OCCLUDING A REPRODUCTIVE BODY LUMEN
Consorzio per il Centro di, IT	***A 61K 9/50*** ***A 61K 9/51*** ***A 61K 31/198*** ***A 61P 25/28***	EP 2296636*	POLYELECTROLYTE-ENCAPSULATED GOLD NANOPARTICLES CAPABLE OF CROSSING BLOOD-BRAIN BARRIER
Corcel IP Limited, NZ	***B 31F 1/28*** ***B 32B 7/14*** ***B 31F 5/04*** ***B 32B 29/08***	EP 2313264*	METHOD OF FORMING SINGLE FACE CORRUGATED BOARD
Cotherm, FR	***F 24H 9/20*** ***G 01F 23/22***	EP 2216610	Thermosensitive sensor for hot water tank
Create GmbH & Co. KG, DE	***F 24D 7/00*** ***F 24D 19/10*** ***F 24H 7/04***	EP 2295872	Method and device for storing regenerative energy in energy recirculation systems
Critical Pharmaceuticals Limited, GB	***A 61K 9/16*** ***A 61K 38/22*** ***A 61P 5/06***	EP 2317979*	PHARMACEUTICAL COMPOSITIONS OF SOMATOTROPHIC HORMONES
Critical Pharmaceuticals Limited, GB	***A 61K 9/16*** ***A 61K 47/14***	EP 2320872*	PROCESS FOR PREPARING MICROPARTICLES
CRM, FR	***B 30B 9/30*** ***B 65B 27/06*** ***B 30B 13/00*** ***B 65G 1/16*** ***B 65G 69/00*** ***B 29D 30/06***	EP 2315657*	MACHINE AND METHOD FOR COMPACTING AN ANNULAR PART MADE OF A FLEXIBLE MATERIAL
Crucell Holland B.V., NL	***C 07K 16/10*** ***A 61K 39/395*** ***A 61P 31/14*** ***C 12N 15/13*** ***C 12N 15/63*** ***C 12N 5/10***	EP 2314620	Binding molecules capable of neutralizing rabies virus and uses thereof
Crucell Holland B.V., NL	***C 07K 16/10*** ***A 61K 39/395*** ***A 61P 31/14*** ***C 12N 15/13*** ***C 12N 15/63*** ***C 12N 5/10***	EP 2314621	Binding molecules capable of neutralizing rabies virus and uses thereof
CTV-Armaturen GmbH, DE	***F 16K 1/22***	EP 2251573	Isolation or regulating fitting
Cullison,US;	***A 61K 31/13*** ***A 61K 31/4545*** ***A 61K 31/439*** ***A 61K 31/506*** ***A 61K 45/06*** ***A 61P 27/02***	EP 2296640*	METHODS FOR PREVENTING THE DEVELOPMENT OF RETINOPATHY BY THE ORAL ADMINISTRATION OF NNR LIGANDS
Curis, US	***A 61K 31/506***	EP 2061468*	TYROSINE KINASE INHIBITORS CONTAINING A ZINC BINDING MOIETY
Curis, US	***C 07D 209/34*** ***A 61K 31/404***	EP 2061758*	SUBSTITUTED 2-INDOLINONE AS PTK INHIBITORS CONTAINING A ZINC BINDING MOIETY

(71)	(51)	Broj objave evropske prijave patenta	(54)
Curis, US	***C 07D 239/88*** ***C 07D 239/93*** ***A 61K 31/517*** ***A 61P 35/04*** ***A 61P 25/16*** ***A 61P 25/28***	EP 2061772*	MULTI-FUNCTIONAL SMALL MOLECULES AS ANTI-PROLIFERATIVE AGENTS
Curis, US	***C 07D 401/00***	EP 2069324*	FUSED AMINO PYRIDINE AS HSP90 INHIBITORS
Curis, US	***A 61K 31/506***	EP 2136809*	RAF KINASE INHIBITORS CONTAINING A ZINC BINDING MOIETY
Curis, US	***C 12N 15/12*** ***C 07K 14/47*** ***A 61K 38/17***	EP 2294197*	VARIANT HHIP1 PROTEIN AND METHODS AND USES THEREOF
CV Holdings, US	***C 23C 16/505*** ***C 23C 16/458*** ***G 01N 15/08*** ***A 61B 5/15***	EP 2251453	Vessel holder
CV THERAPEUTICS, US	***C 07D 473/06*** ***A 61K 31/522***	EP 2301937	Prodrugs of A2b adenosine receptor antagonists
D.M.G. Italia Srl, IT	***A 61K 9/00***	EP 2320870*	TOPICAL INTRANASAL COMPOSITION USABLE IN THE CASE OF NASAL OBSTRUCTION
Dall Energy Holding ApS, DK	***F 23J 15/04*** ***F 23J 15/06*** ***B 01D 47/06*** ***B 01D 53/78***	WO 2010025739	METHOD AND SYSTEM FOR COOLING HOT GASES BY WATER INJECTION
Dana Farber Cancer Institute, US	***A 61K 31/437***	EP 2296650*	IMMUNOMODULATION BY IAP INHIBITORS
Dana-Farber Cancer Institute Inc., US	***A 61K 31/7088*** ***A 61K 31/7105*** ***A 61P 35/00***	EP 2315594*	METHODS OF TREATING A MEIOTIC KINESIN-ASSOCIATED DISEASE
Danisco A/S, DK	***C 12N 9/16*** ***C 12N 15/55*** ***C 12N 15/11*** ***C 12P 21/02*** ***C 12N 1/20*** ***A 23K 1/165***	EP 2236600	Phytases
Danisco A/S, DK	***C 12N 9/16*** ***C 12N 15/55*** ***C 12N 15/11*** ***C 12P 21/02*** ***C 12N 1/20*** ***A 23K 1/165***	EP 2264156	Phytases
Danisco A/S, DK	***A 23L 1/29*** ***A 23L 1/314*** ***C 12N 9/10*** ***A 23K 1/18*** ***A 23L 1/305*** ***A 23L 1/317***	EP 2296495*	A CHOLESTEROL REDUCED MEAT BASED FOOD PRODUCT
Danmarks Tekniske Universitet, DK	***C 07K 14/195*** ***A 23C 9/12***	EP 2310404*	TRANSCONJUGANTS OF LACTIC ACID BACTERIA

(71)	(51)	Broj objave evropske prijave patenta	(54)
Danmarks Tekniske Universitet,DK;	***A 61K 9/00*** ***A 61K 47/12*** ***A 61F 13/00*** ***A 61L 2/00*** ***A 61K 9/08***	EP 2306972*	ACETIC ACID AND A BUFFER
De Rosa,IT;	***C 07K 4/12*** ***A 61K 38/03***	EP 2230245	Peptides having pharmacological activity for treating disorders associated with altered cell migration, such as cancer
Debiopharm S.A., CH	***A 61K 9/08*** ***A 61K 47/36*** ***A 61K 47/40*** ***A 61K 31/282***	EP 2303229*	CONCENTRATED OXALIPLATIN SOLUTION AND ITS METHOD OF PREPARATION
Delphi Technologies Holding S.à.r.l., LU	***F 02M 55/02*** ***F 02M 63/02***	EP 2204574	Fuel injection system
Delphi Technologies Holding S.à.r.l., LU	***F 02M 51/00*** ***F 02M 51/06*** ***F 02M 61/16***	EP 2224123	Piezoelectric actuator
Delphi Technologies Holding S.à.r.l., LU	***B 01D 35/18***	EP 2236185	Filter Assembly
Deutsche Telekom AG, DE	***H 04W 64/00*** ***G 01S 5/02***	EP 2301289*	METHOD FOR CHECKING THE LOCATION OF A FEMTOCELL
Dimitriadis,GR;	***G 09G 3/32***	EP 2237253	Pixel circuit, display using the same and driving method for the same
Dizlin Medical Design AB, SE	***A 61K 9/08*** ***A 61K 31/198*** ***A 61P 25/16***	EP 2298281	Infusion and injection solution of Levodopa
Domantis Limited, GB	***C 07K 16/28***	EP 2321352*	COMPOSITIONS MONOVALENT FOR CD28 BINDING AND METHODS OF USE
Dow Global Technologies LLC, US	***C 07C 209/78*** ***B 01J 21/12*** ***B 01J 37/00***	EP 2321257*	PRODUCTION OF MIXTURES OF METHYLENEDIANILINE AND ITS HIGHER HOMOLOGUES USING CALCINED METAL OXIDE-SILICA CATALYSTS
Dow Pharmaceutical Sciences, US	***A 01N 31/00*** ***A 61K 31/075***	EP 2299810*	TOPICAL PHARMACEUTICAL FORMULATIONS CONTAINING A LOW CONCENTRATION OF BENZOYL PEROXIDE IN SUSPENSION IN WATER AND A WATER-MISCIBLE ORGANIC SOLVENT
dPoint Technologies Inc., CA	***F 24F 3/147*** ***B 01D 46/52*** ***B 31D 5/04*** ***F 24F 12/00*** ***F 28F 21/00***	EP 2304326*	CROSS-PLEATED MEMBRANE CARTRIDGES, AND METHOD AND APPARATUS FOR MAKING CROSS-PLEATED MEMBRANE CARTRIDGES
Dr. Falk Pharma GmbH, DE	***A 61K 9/46*** ***A 61K 31/58***	EP 2306988*	PHARMACEUTICAL FORMULATION FOR TREATING THE UPPER DIGESTIVE TRACT
Duke University, US	***A 61K 31/415*** ***A 61K 31/4155*** ***A 61K 31/426*** ***A 61P 25/28*** ***A 61P 25/16*** ***A 61P 35/00***	EP 2300004*	COMPOSITIONS AND METHODS RELATING TO HEAT SHOCK TRANSCRIPTION FACTOR ACTIVATING COMPOUNDS AND TARGETS THEREOF

(71)	(51)	Broj objave evropske prijave patenta	(54)
Duquesne University of the Holy Ghost, US	***A 61K 31/505***	EP 2310014*	TRICYCLIC COMPOUNDS HAVING ANTIMITOTIC AND/OR ANTITUMOR ACTIVITY AND METHODS OF USE THEREOF
Duquesne University of The Holy Spirit, US	***A 01N 43/52***	EP 2312951*	BICYCLIC COMPOUNDS HAVING ANTIMITOTIC AND/OR ANTITUMOR ACTIVITY AND METHODS OF USE THEREOF
Eastman Specialties Holdings Corporation, US	***C 08J 9/00*** ***C 08J 9/232*** ***C 08K 5/00*** ***C 08K 5/103*** ***C 08K 5/12*** ***C 08L 27/06***	EP 1930366	Low-color foam compositions
Easton Sports, US	***A 63B 59/14***	EP 2310098*	HOCKEY STICK
Eaton GmbH, AT	***H 01T 4/06***	EP 2308144*	SURGE ARRESTER
Eberle,IT;	***F 23J 15/04***	EP 2221538	Energy recovery device
Eberle,IT;	***F 23J 15/04***	EP 2221539	Energy recovery apparatus
Ebner, DE	***F 16B 19/10*** ***B 60D 1/60***	EP 2253857	Catch element
Eco Quadrinvest S.r.l., IT	***B 29B 17/02*** ***D 21B 1/02***	EP 2296858*	METHOD FOR RECYCLING COMPOSITE MATERIAL
Ecole Veterinaire De Maisons Alfort, FR	***C 12Q 1/68***	EP 2310530*	METHOD FOR DIAGNOSING AND PREDICTING CEREBELLAR ATAXIA
Eisai R&D Management Co., JP	***C 07D 213/75*** ***A 61K 31/4412*** ***A 61K 31/4427*** ***A 61K 31/496*** ***A 61K 31/506*** ***A 61K 31/5377*** ***A 61P 35/00*** ***C 07D 401/12*** ***C 07D 401/14*** ***C 07D 403/12*** ***C 12N 15/09*** ***C 12Q 1/68*** ***G 01N 33/15*** ***G 01N 33/48*** ***G 01N 33/50*** ***G 01N 33/53*** ***G 01N 33/574***	EP 2119706	PYRIDINE OR PYRIMIDINE DERIVATIVE HAVING EXCELLENT CELL GROWTH INHIBITION EFFECT AND EXCELLENT ANTI-TUMOR EFFECT ON CELL STRAIN HAVING AMPLIFICATION OF HGFR GENE
Eisai R&D Management Co.,JP;	***C 07D 407/06*** ***A 61K 31/496*** ***A 61P 35/00***	EP 2116542	SOLID OF MACROLIDE COMPOUND, METHOD FOR PRODUCTION THEREOF, AND PHARMACEUTICAL COMPOSITION COMPRISING THE SAME
Eli Lilly & Company, US	***C 07D 279/06*** ***A 61K 31/541*** ***A 61P 25/28***	EP 2297120*	AMINODIHYDROTHIAZINE DERIVATIVES AS BACE INHIBITORS FOR THE TREATMENT OF ALZHEIMER'S DISEASE

(71)	(51)	Broj objave evropske prijave patenta	(54)
Eli Lilly & Company, US	***C 07D 401/12*** ***C 07D 401/14*** ***C 07D 403/12*** ***C 07D 403/14*** ***C 07D 405/14*** ***A 61K 31/4412*** ***A 61P 35/00***	EP 2310382*	AMIDOPHENOXYINDAZOLES USEFUL AS INHIBITORS OF C-MET
ELI LILLY AND COMPANY, US	***C 07K 16/28*** ***A 61K 39/395*** ***A 61P 35/00***	EP 2297206*	ANTI-CXCR4 ANTIBODIES
Emergent Biosolutions Inc., US	***A 61K 39/07*** ***A 61K 47/00***	EP 2320945*	STABLE ANTHRAX VACCINE FORMULATIONS
Emergent Product Development Seattle, US	***C 07K 14/715*** ***C 07K 16/24*** ***C 12N 15/62***	EP 2310410*	TNF- ANTAGONIST MULTI-TARGET BINDING PROTEINS
Emergent Product Development Seattle, US	***C 12N 15/62*** ***C 07K 14/715*** ***C 07K 16/28*** ***C 07K 16/24*** ***A 61K 38/17***	EP 2310508*	TGF-B ANTAGONIST MULTI-TARGET BINDING PROTEINS
Emergent Product Development Seattle, US	***A 61K 39/395*** ***C 07K 16/24*** ***C 07K 16/28*** ***C 07K 16/46***	EP 2313109*	IL6 IMMUNOTHERAPEUTICS
Emergent Product Development Seattle, US	***C 07K 14/705*** ***C 07K 16/28*** ***C 12N 15/62*** ***A 61K 38/17***	EP 2321345*	MULTI-SPECIFIC BINDING PROTEINS TARGETING B CELL DISORDERS
Energy Korea Inc., KR	***B 01J 27/18*** ***B 01J 35/00***	EP 2163304	Coating composition comprising photocatalyst coated with apatite and radiant heating system having the same
English, IN		WO 2009156472	A STONE PANEL
Envivo Pharmaceuticals, US	***C 07D 401/10*** ***C 07D 413/10*** ***C 07D 215/227*** ***C 07D 417/10*** ***C 07D 295/02*** ***C 07D 407/10*** ***A 61K 31/47*** ***A 61K 31/4427*** ***A 61P 3/10*** ***A 61P 15/00*** ***A 61P 25/00***	EP 2297131*	DI-SUBSTITUTED PHENYL COMPOUNDS AS PHOSPHODIESTERASE 10 INHIBITORS
Envivo Pharmaceuticals, US	***C 07D 401/12*** ***C 07D 401/14*** ***C 07D 405/12*** ***C 07D 413/14*** ***C 07D 417/14*** ***A 61K 31/4409*** ***A 61K 31/5355*** ***A 61P 25/18***	EP 2297133*	1, 2 DISUBSTITUTED HETEROCYCLIC COMPOUNDS

(71)	(51)	Broj objave evropske prijave patenta	(54)
Envivo Pharmaceuticals, US	***C 07D 401/12*** ***C 07D 401/14*** ***C 07D 405/12*** ***C 07D 405/14*** ***C 07D 413/14*** ***A 61K 31/4409*** ***A 61K 31/5355*** ***A 61K 31/47*** ***A 61P 25/18***	EP 2303863*	5- AND 6-MEMBERED HETEROCYCLIC COMPOUNDS
Envivo Pharmaceuticals, US	***C 07D 487/02*** ***A 61K 31/519***	EP 2318410*	NEW SMALL-MOLECULE PDE-10 INHIBITORS
Ethicon Endo-Surgery, US	***A 61B 17/128***	EP 2313014*	DEVICES AND METHODS FOR PLACING OCCLUSION FASTENERS
Ethicon Endo-Surgery, US	***B 06B 1/08*** ***A 61B 17/32*** ***H 01L 41/20*** ***A 61B 17/22***	EP 2315634*	A MAGNETOSTRICTIVE ACTUATOR OF A MEDICAL ULTRASOUND TRANSDUCER ASSEMBLY, AND A MEDICAL ULTRASOUND HANDPIECE AND A MEDICAL ULTRASOUND SYSTEM HAVING SUCH ACTUATOR
Ethicon, US	***A 61B 17/04*** ***A 61B 17/06***	EP 2299913*	DEVICES FOR TENSIONING BARBED SUTURES
Ethicon, US	***B 23K 26/38*** ***A 61B 17/06***	EP 2300194*	POST LASER DRILLING STRESS RELIEF OF SURGICAL NEEDLES MADE OF REFRACTORY ALLOYS
EURO-CELTIQUE S.A., LU	***C 07D 489/00*** ***C 07D 489/08*** ***A 61K 9/00*** ***A 61K 31/485***	EP 2305683	Pharmaceutical dosage form comprising oxycodone hydrochloride having less than 25 ppm 14-hydroxycodeinone
Euro-Celtique S.A., LU	***A 61K 31/485*** ***A 61K 9/22***	EP 2308494	Tamper resistant dosage forms
Euro-Celtique S.A., LU	***A 61K 31/485*** ***A 61K 9/22***	EP 2311458	Tamper resistant dosage forms
EURO-CELTIQUE S.A., LU	***C 07D 489/08***	EP 2311839	Oxycodone hydrochloride composition having less than 25 ppm 14-hydroxycodeinone
EURO-CELTIQUE S.A., LU	***C 07D 489/08*** ***A 61K 31/485*** ***A 61P 29/00***	EP 2314589	Process for preparing oxycodone hydrochloride having less than 25ppm 14-hydroxycodeinone
EURO-CELTIQUE S.A., LU	***C 07D 489/08*** ***A 61K 31/485*** ***A 61P 29/00***	EP 2316837	Process for preparing oxycodone hydrochloride having less than 25ppm 14-hydroxycodeinone
Euro-Celtique S.A., LU	***A 61K 31/00*** ***A 61K 31/485*** ***A 61P 13/02***	EP 2317991*	USE OF OPIOID ANTAGONISTS FOR TREATING URINARY RETENTION
EURO-CELTIQUE S.A., LU	***A 61K 9/16*** ***A 61K 9/20***	EP 2319499	Alcohol resistant dosage forms
EURO-CELTIQUE S.A., LU	***C 07D 489/08*** ***A 61K 31/485*** ***A 61P 29/00***	EP 2319846	Process for preparing oxycodone hydrochloride having less than 25ppm 14-hydroxycodeinone

(71)	(51)	Broj objave evropske prijave patenta	(54)
Evotec AG, DE	***C 07D 205/04*** ***C 07D 401/12*** ***C 07D 403/12*** ***C 07D 401/06*** ***A 61K 31/397*** ***A 61K 31/496*** ***A 61P 25/00*** ***C 07D 403/14*** ***C 07D 471/04*** ***C 07D 487/04*** ***A 61P 1/00*** ***A 61P 9/00*** ***A 61P 11/00***	EP 2300422*	AZETIDINES AND CYCLOBUTANES AS HISTAMINE H3 RECEPTOR ANTAGONISTS
EVVA Sicherheitstechnologie GmbH, AT	***E 05B 27/02*** ***E 05B 27/06*** ***E 05B 19/06***	EP 2310598*	CYLINDER LOCK WITH CYLINDER HOUSING AND FLAT KEY FOR A CYLINDER LOCK
Exelixis, US	***A 61K 31/437*** ***A 61K 31/506*** ***A 61K 31/519*** ***A 61K 31/5377*** ***A 61K 31/5383*** ***A 61K 31/55*** ***C 07D 471/04*** ***C 07D 487/04*** ***C 07D 487/10*** ***C 07D 498/04*** ***C 07D 498/14*** ***C 07D 491/107*** ***A 61P 35/00***	EP 2320895*	CDK MODULATORS
Explo Engineerting GmbH, CH	***G 10K 15/04***	EP 2319036*	APPARATUS AND METHOD FOR PRODUCING EXPLOSIONS
Expres2ion Biotechnologies APS, DK	***C 12N 15/09***	EP 2307543*	IMPROVED PROTEIN EXPRESSION SYSTEM
F. Hoffmann-La Roche AG, CH	***C 07D 413/14*** ***C 07D 401/10*** ***C 07D 401/14*** ***C 07D 417/14*** ***A 61K 31/501*** ***A 61P 9/02***	EP 2297142*	NOVEL SUBSTITUTED PYRIDIN-2-ONES AND PYRIDAZIN-3-ONES
F. Hoffmann-La Roche AG, CH	***C 07D 263/28*** ***C 07D 413/12*** ***A 61K 31/421*** ***A 61K 31/422*** ***A 61P 25/00*** ***A 61P 3/04*** ***A 61P 3/06*** ***A 61P 3/10***	EP 2321287*	4,5-DIHYDRO-OXAZOL-2-YL DERIVATIVES
F.I.R.E. S.r.l., IT	***C 03B 7/06***	EP 2310331*	FOREHEARTH OR WORKING-END FOR GLASS FURNACE AND PROCEDURE FOR THE EXTRACTION OF FUMES FROM THE FOREHEARTH
Faam S.p.a., IT	***H 02J 7/00*** ***H 02J 3/00*** ***H 02J 13/00***	EP 2297834*	SYNERGISTIC SYSTEM BETWEEN BATTERY CHARGER AND BATTERY

(71)	(51)	Broj objave evropske prijave patenta	(54)
FAES FARMA, ES	***C 07D 277/24*** ***A 61K 31/425***	EP 2313382*	5-(4-METHANESULFONYL-PHENYL)-THIAZOLE DERIVATIVES FOR THE TREATMENT OF ACUTE AND CHRONIC INFLAMMATORY DISEASES
Fermenta Biotech Limited,IN;	***C 12N 15/55*** ***C 12N 9/84***	EP 2109672*	DNA SEQUENCE ENCODING PENICILLIN ACYLASE, NOVEL RECOMBINANT DNA CONSTRUCTS AND RECOMBINANT MICROORGANISMS CARRYING THIS SEQUENCE
Fertirev SRL, IT	***C 05F 11/02*** ***B 01F 17/52*** ***B 01F 17/56*** ***B 09C 1/08***	EP 2310342*	PROCESS FOR THE PREPARATION OF FERTILIZER AND SURFACTANT NATURAL COMPOSITIONS FOR WASHING, RECLAMATION AND CULTIVATION OF CONTAMINATED SOILS AND RELATED COMPOSITIONS
Fibrogen, US	***A 61K 39/39*** ***A 61K 39/395*** ***A 61K 31/00*** ***A 61K 38/00*** ***A 61P 13/12***	EP 1977762	CTGF AS TARGET FOR THE THERAPY OF DIABETIC NEPHROPATHY
Fleischmann & Petschnig, AT	***E 04D 13/00*** ***G 01M 3/16***	EP 2236691	Assembly and method for checking roofs
Force Protection Technologies, US	***F 41H 5/02***	EP 2297541*	APPARATUS FOR DEFEATING HIGH ENERGY PROJECTILES
Forest Laboratories Holdings Limited,BM;	***A 01N 43/62*** ***A 61K 31/55***	EP 2317852*	PHARMACEUTICAL FORMULATIONS CONTAINING DOPAMINE RECEPTOR LIGANDS
Fresh Express Incorporated, US	***A 23L 3/3463***	EP 2303041*	PERACID AND 2-HYDROXY ORGANIC ACID COMPOSITIONS AND METHODS FOR TREATING PRODUCE
Funari, IT	***A 61F 7/10***	EP 2313038*	ARTICLE WITH REFRESHING OR WARMING EFFECT FOR USER
Gabbert,DE;	***A 47G 9/02*** ***A 01G 9/02***	EP 2303071*	DEVICE FOR INCREASING THE STABILITY OF VESSELS, SUCH AS SAUCEPANS, VASES OR SIMILAR
Galapagos N.V., BE	***C 07D 519/00*** ***A 61K 31/4985*** ***A 61K 31/4995*** ***A 61P 19/02***	EP 2307426*	FUSED PYRAZINE COMPOUNDS USEFUL FOR THE TREATMENT OF DEGENERATIVE AND INFLAMMATORY DISEASES
GAT Microencapsulation AG, AT	***A 01N 47/40*** ***A 01N 51/00*** ***A 01N 43/40*** ***A 01N 25/00*** ***A 01N 25/04*** ***A 01N 25/30*** ***A 01P 7/04***	EP 2225940	Oil dispersions of nAChR binding neonicotinoids
Genelux Corporation, US	***A 61K 35/28*** ***A 61K 35/48*** ***A 61K 35/76*** ***A 61K 45/06*** ***C 12N 7/00*** ***C 12N 15/00*** ***A 61P 35/00***	EP 2300023*	MICROORGANISMS FOR PREVENTING AND TREATING NEOPLASMS ACCOMPANYING CELLULAR THERAPY

(71)	(51)	Broj objave evropske prijave patenta	(54)
Genentech, US	***C 12Q 1/68***	EP 2061906*	METHODS AND COMPOSITIONS FOR THE DIAGNOSIS AND TREATMENT OF LUNG CANCER USING PDGFRA, KIT OR KDR GENE AS GENETIC MARKER
Genentech, US	***C 07K 16/28*** ***C 12N 15/13*** ***C 12N 5/12*** ***A 61K 39/395*** ***A 61P 35/00***	EP 2081962*	NOVEL ANTI-NOTCH3 ANTIBODIES AND THEIR USE IN THE DETECTION AND DIAGNOSIS OF DISEASE
Genentech, US	***C 07K 16/42*** ***A 61P 37/06***	EP 2132230*	APOPTOTIC ANTI-IGE ANTIBODIES BINDING THE MEMBRANE-BOUND IGE
Genentech, US	***G 01N 33/50*** ***G 01N 33/15*** ***C 12Q 1/02***	EP 2294413*	METHOD FOR SCREENING FOR COMPOUNDS THAT INHIBIT NEURODEGENERATION
Genentech, US	***A 01N 43/64*** ***A 61K 31/41***	EP 2296475*	TRIAZOLOPYRIDINE JAK INHIBITOR COMPOUNDS AND METHODS
Genentech, US	***C 07D 401/12*** ***A 61K 31/4439*** ***A 61P 35/00***	EP 2300457*	SUBSTITUTED PYRROLES AND METHODS OF USE
Genentech, US	***C 07D 471/14*** ***A 61K 31/437*** ***A 61P 35/00***	EP 2300475*	DIAZACARBAZOLES AND METHODS OF USE
Genentech, US	***C 07D 209/44*** ***A 61K 31/4035*** ***A 61P 35/00*** ***A 61P 29/00***	EP 2307364*	ISOINDOLONE DERIVATIVES AS MEK KINASE INHIBITORS AND METHODS OF USE
Genentech, US	***C 07D 231/56*** ***C 07D 275/04*** ***C 07D 403/12*** ***C 07D 405/12*** ***C 07D 471/04*** ***A 61K 31/437*** ***A 61P 35/00***	EP 2310373*	BICYCLIC HETEROCYCLES AS MEK KINASE INHIBITORS
Genentech, US	***C 07D 239/02***	EP 2318377*	PYRIMIDINE COMPOUNDS, COMPOSITIONS AND METHODS OF USE
Genentech, US	***C 07D 403/12*** ***C 07D 403/10*** ***A 61K 31/4025*** ***A 61P 35/00***	EP 2318395*	INHIBITORS OF IAP
Genentech, US	***C 07D 417/04*** ***C 07D 417/02*** ***C 07D 413/04*** ***C 07D 413/02*** ***C 07D 487/04*** ***C 07D 487/02*** ***A 61K 31/33*** ***A 61P 35/00***	EP 2318401*	AZAINDOLE INHIBITORS OF IAP
Genentech, US	***C 07K 1/18*** ***C 07K 1/34*** ***C 07K 1/36***	EP 2321337*	METHODS FOR REMOVING A CONTAMINANT USING INDIGENOUS PROTEIN DISPLACEMENT ION EXCHANGE MEMBRANE CHROMATOGRAPHY
Genentech,US;	***C 12N 15/12*** ***C 07K 14/47*** ***A 61K 38/17***	EP 2294197*	VARIANT HHIP1 PROTEIN AND METHODS AND USES THEREOF

(71)	(51)	Broj objave evropske prijave patenta	(54)
Genentech,US;	***A 61K 47/48*** ***A 61P 35/00***	EP 2303332*	ANTHRACYCLINE DERIVATIVE CONJUGATES, PROCESS FOR THEIR PREPARATION AND THEIR USE AS ANTITUMOR COMPOUNDS
General Electric Company, US	***B 29C 70/44***	EP 2221167	Apparatus And Method Of Making Composite Material Articles
Genfit, FR	***C 07D 213/64*** ***C 07D 213/70*** ***C 07D 213/74*** ***C 07D 407/04*** ***C 07D 213/643*** ***A 61K 31/44*** ***A 61K 31/443*** ***A 61K 31/444*** ***A 61P 3/10*** ***A 61P 3/06***	WO 2009153496	PPAR AGONIST COMPOUNDS AND PREPARATION AND USES THEREOF FOR TREATING DIABETES AND/OR DYSLIPIDEMIA
Genfit, FR	***C 07D 213/64*** ***C 07D 213/70*** ***C 07D 213/74*** ***C 07D 407/04*** ***C 07D 213/643*** ***A 61K 31/44*** ***A 61K 31/443*** ***A 61K 31/444*** ***A 61P 3/10*** ***A 61P 3/06***	EP 2310371*	PPAR AGONIST COMPOUNDS AND PREPARATION AND USES THEREOF FOR TREATING DIABETES AND/OR DYSLIPIDEMIA
GENZYME CORPORATION, US	***A 61K 8/72*** ***A 61K 31/785*** ***A 61P 3/12***	EP 2068819*	DENDRIMER COMPOSITIONS
Genzyme Corporation, US	***A 61K 31/325*** ***A 61K 31/357*** ***A 61K 31/396*** ***A 61K 31/40*** ***A 61K 31/4025*** ***A 61K 31/403*** ***A 61K 31/4155*** ***A 61K 31/4178*** ***A 61K 31/4192*** ***A 61K 31/4245*** ***A 61K 31/427*** ***A 61K 31/428*** ***A 61K 31/4433*** ***A 61K 31/4439*** ***A 61K 31/453***	EP 2320886*	GLUCOSYLCERAMIDE SYNTHASE INHIBITION FOR THE TREATMENT OF COLLAPSING GLOMERULOPATHY AND OTHER GLOMERULAR DISEASE
Georgsmarienhütte GmbH, DE	***C 22C 38/12***	EP 2057298*	STEEL, AND PROCESSING METHOD FOR THE PRODUCTION OF HIGHER-STRENGTH FRACTURE-SPLITTABLE MACHINE COMPONENTS
Geox S.p.A., IT	***A 43B 7/06*** ***A 43B 7/12*** ***A 43B 13/16***	EP 2320762*	INSERT FOR SOLES, PARTICULARLY FOR PERFORATED SOLES MADE OF POLYMERIC MATERIAL COMPRISING A MEMBRANE THAT IS IMPERMEABLE TO WATER AND PERMEABLE TO WATER VAPOR, AND SOLE COMPRISING SAID INSERT

(71)	(51)	Broj objave evropske prijave patenta	(54)
Glaxo Group Limited, GB	***C 07D 487/04*** ***A 61K 31/4985*** ***A 61P 25/00***	EP 2297152*	ANHYDROUS CRYSTAL FORM OF ORVEPITANT MALEATE
Glaxo Group Limited, GB	***C 07D 471/16*** ***A 61K 31/4745*** ***A 61P 31/06***	EP 2300476*	TRICYCLIC NITROGEN CONTAINING COMPOUNDS AND THEIR USE AS ANTIBACTERIALS
Glaxo Group Limited, GB	***C 07C 235/56*** ***A 61K 31/16***	EP 2303832*	NOVEL POLYMORPHIC FORMS OF (4-{[(5-{[(3-CHLOROPHENYL)METHYL]OXY}-2-METHYLPHENYL)CARBONYL]AMINO}-3-METHYLPHENYL)ACETIC ACID
Glaxo Group Limited, GB	***C 07C 215/10*** ***C 07C 235/56*** ***A 61K 31/195*** ***A 61K 31/205*** ***A 61P 19/00***	EP 2307351*	NOVEL SALTS OF (4-{[(5-{[(3-CHLOROPHENYL)METHYL]OXY}-2-METHYLPHENYL)CARBONYL]AMINO}-3-METHYLPHENYL)ACETIC ACID
Glaxo Group Limited, GB	***A 61K 39/04*** ***C 07K 14/35*** ***G 01N 33/569***	EP 2315597*	NOVEL COMPOSITIONS AND METHODS
Glaxo Group Limited, GB	***C 07K 14/35*** ***A 61K 39/04***	EP 2315773*	NOVEL COMPOSITIONS AND METHODS
Glaxo Group Limited, GB	***C 12N 15/60*** ***C 12N 15/61*** ***C 12N 9/88*** ***C 12N 9/90*** ***C 07K 14/35*** ***A 61K 38/51*** ***A 61K 38/52*** ***A 61K 39/04***	EP 2315834*	THE TUBERCULOSIS RV2386C PROTEIN, COMPOSITIONS AND USES THEREOF
Glaxo Group Limited, GB	***C 07K 16/28*** ***A 61K 39/395*** ***A 61P 25/00***	EP 2318442*	TREATMENT OF AUTOIMMUNE AND INFLAMMATORY DISEASE
Glaxo Wellcome Manufacturing Pte Ltd, SG	***C 07D 401/04*** ***A 61K 31/44*** ***A 61P 25/00***	EP 2300452*	5-[5-[2-(3,5-BIS(TRIFLUOROMETHYL)PHENYL)-2-METHYLPROPANOYLMETHYLAMINO]-4-(4-FLUORO-2-METHYLPHENYL)]-2-PYRIDINYL-2-ALKYL-PROLINAMIDE AS NK1 RECEPTOR ANTAGONISTS
Glaxo Wellcome Manufacturing Pte Ltd, SG	***C 07D 471/10*** ***C 07D 498/20*** ***A 61P 25/22*** ***A 61P 25/24*** ***A 61P 29/00***	EP 2300474*	SPIRO (PIPERIDINE-4, 2 ' -PYRROLIDINE) -1- (3, 5- TRIFLUOROMETHYL PHENYL) METHYLCARBOXAMIDES AS NK1 TACHIKYNIN RECEPTOR ANTAGONISTS
GlaxoSmithKline Biologicals S.A., BE	***A 61K 39/12*** ***A 61P 35/00***	EP 2318042*	VACCINE AGAINST HPV
GlaxoSmithKline Biologicals S.A.,BE;	***A 61K 39/04*** ***C 07K 14/35*** ***G 01N 33/569***	EP 2315597*	NOVEL COMPOSITIONS AND METHODS
GlaxoSmithKline Biologicals S.A.,BE;	***C 07K 14/35*** ***A 61K 39/04***	EP 2315773*	NOVEL COMPOSITIONS AND METHODS

(71)	(51)	Broj objave evropske prijave patenta	(54)
GlaxoSmithKline Biologicals S.A.,BE;	***C 12N 15/60*** ***C 12N 15/61*** ***C 12N 9/88*** ***C 12N 9/90*** ***C 07K 14/35*** ***A 61K 38/51*** ***A 61K 38/52*** ***A 61K 39/04***	EP 2315834*	THE TUBERCULOSIS RV2386C PROTEIN, COMPOSITIONS AND USES THEREOF
GlaxoSmithKline LLC, US	***A 01N 37/18*** ***A 61K 31/16***	EP 2309852*	NOVEL METHOD
GlaxoSmithKline LLC, US	***C 07D 498/04*** ***A 61K 31/4985*** ***A 61P 25/00***	EP 2321324*	CRYSTALLINE FORMS OF A PYRIDINE DERIVATIVE
Glue Dots International, US	***C 09J 7/02*** ***C 09J 7/00*** ***B 65H 37/00***	EP 2199355	Adhesive dispensing tape including a transparent carrier material
Good Wave Technologies Ltd., CY	***D 01G 21/00*** ***D 01B 1/00***	EP 2312025	METHOD FOR PROCESSING BAST-FIBER MATERIALS
Green, US	***B 65D 88/00***	EP 2313330*	TRANSPORTABLE, MODULAR, SELF CONTAINED SHIPPING CONTAINER BUILDING
Grindeks, LV	***C 07F 3/02***	EP 2129679*	A METHOD FOR PREPARATION OF SUBSTITUTED ADAMANTYLARYLMAGNESIUM HALIDES
H. Lundbeck A/S, DK	***C 07C 253/34*** ***C 07C 255/53*** ***C 07D 307/87***	EP 2061753*	METHOD FOR MANUFACTURE OF ESCITALOPRAM
H. Lundbeck A/S, DK	***C 07D 265/36*** ***C 07D 498/04*** ***A 61K 31/538*** ***A 61P 25/00***	EP 2303851*	NOVEL PHENOLIC AND CATECHOLIC AMINES AND PRODRUGS THEREOF
H. Lundbeck A/S, DK	***A 61K 38/10*** ***A 61P 25/00***	EP 2307042*	MODULATION OF THE TRPV : VPS10P-DOMAIN RECEPTOR SYSTEM FOR THE TREATMENT OF PAIN
H. Lundbeck A/S, DK	***C 07C 233/79*** ***A 61K 31/4412*** ***A 61K 31/444*** ***A 61P 25/00*** ***C 07C 233/00*** ***C 07D 213/81*** ***C 07D 215/48*** ***C 07D 231/14*** ***C 07D 241/44*** ***C 07D 333/38*** ***C 07D 401/12*** ***C 07D 401/14*** ***C 07D 403/12*** ***C 07D 405/12*** ***C 07D 405/14***	EP 2310356*	ADAMANTYL DIAMIDE DERIVATIVES AND USES OF SAME

(71)	(51)	Broj objave evropske prijave patenta	(54)
H. Lundbeck A/S, DK	***C 07D 401/04*** ***C 07D 401/14*** ***C 07D 403/04*** ***C 07D 409/04*** ***C 07D 413/04*** ***C 07D 417/04*** ***A 61K 31/4725*** ***A 61P 25/18***	EP 2313391*	ISOQUINOLINONE DERIVATIVES AS NK3 ANTAGONISTS
H. Lundbeck A/S, DK	***C 12Q 1/68*** ***G 01N 33/68*** ***G 01N 33/53*** ***G 06F 19/00***	EP 2318551*	SYSTEM AND METHODS FOR MEASURING BIOMARKER PROFILES
H. Lundbeck A/S,DK;	***C 07D 489/08*** ***A 61K 31/485*** ***A 61P 25/30***	EP 2300479*	NALMEFENE HYDROCHLORIDE DIHYDRATE
H.D. Lenzen Bandverzinkung GmbH & Co. KG, DE	***C 23C 22/53*** ***B 05D 7/14*** ***C 25D 5/48***	EP 2224037	Method for passivating metal substrate belts
Halozyme, US	***A 61K 38/28*** ***A 61K 38/47*** ***A 61P 5/50*** ***A 61P 3/10***	EP 2300046*	SUPER FAST-ACTING INSULIN COMPOSITIONS
Handa Pharmaceuticals, US	***A 61K 9/20*** ***A 61K 9/22*** ***A 61K 9/52***	EP 2299983*	STABILIZED ATYPICAL ANTIPSYCHOTIC FORMULATION
Hannemann, DE	***A 47G 9/00*** ***A 61N 1/16***	EP 2227992	Body designed in the style of a textile cover or pacifier
Hanwang Technology Co., CN	***G 06K 9/20***	EP 2306367	DUAL CAMERAS FACE RECOGNITION DEVICE AND METHOD
Hashiba,BR;	***A 61B 1/018***	EP 2296529*	SURGICAL ENDOSCOPE
Hausbrandt Trieste 1892 SPA, IT	***A 47J 31/36***	EP 2218367	Perforation device for capsules and machine for preparing beverages incorporating said device
HCB Happy Child Birth Holding AG, CH	***A 61M 31/00***	EP 2125095*	APPLICATOR FOR THE USE OF BIRTH GEL FOR HUMAN BIRTH
Helios Technology S.P.S.,IT;	***C 02F 9/08*** ***C 02F 1/42*** ***C 02F 103/04*** ***B 01J 47/04*** ***C 02F 9/04*** ***C 02F 103/12*** ***C 02F 103/34*** ***C 02F 1/28*** ***C 02F 1/04*** ***C 02F 1/52*** ***C 02F 9/00***	EP 2297050*	APPARATUS FOR TREATING WASTEWATER, PARTICULARLY WASTEWATER ORIGINATING FROM A PROCESS FOR THE PRODUCTION OF PHOTOVOLTAIC CELLS
High Point Pharmaceuticals, US	***C 07D 405/04*** ***A 61K 31/501***	EP 2079732*	3- (1, 3-BENZ0DI0X0L-5-YL) -6- (4-CYCLOPROPYLPIPERAZIN-1-YL) -PYRIDAZINE, ITS SALTS AND SOLVATES AND ITS USE AS HISTAMINE H3 RECEPTOR ANTAGONIST
Hill Pharmaceutical Co., CN	***A 61K 31/45*** ***A 61P 3/10***	EP 2301543	A PHARMACEUTICAL COMPOSITION FOR TREATING DIABETES

(71)	(51)	Broj objave evropske prijave patenta	(54)
Hitachi Chemical Co., JP	***C 09J 201/00*** ***C 09J 7/00*** ***H 01B 1/22*** ***H 01L 21/60*** ***H 05K 1/14***	EP 2322585	Adhesive composition, circuit connecting material and connecting structure of circuit member
Hitachi Power Europe GmbH, DE	***F 22B 21/00*** ***F 22B 37/04***	EP 2297517*	MEMBRANE WALL OF A LARGE-SCALE STEAM GENERATOR
HOPPE AG, DE	***E 05B 3/06*** ***E 05B 63/04*** ***E 05B 15/04***	EP 1953311	Return spring arrangement for door or window fittings and door or window fittings
Horanek, CZ	***E 02D 5/80***	EP 2315882*	PILE FOR FOUNDATION
Huang, TW	***H 05K 1/02*** ***F 21V 19/00***	EP 2302985	LED assembly
Huf Hülsbeck & Fürst GmbH & Co. KG, DE	***G 07C 5/00*** ***G 07C 5/08***	EP 2294556*	MOBILE IDENTIFICATION TRANSMITTER IN A SAFETY SYSTEM
Huf Hülsbeck & Fürst GmbH & Co. KG, DE	***G 07C 5/08*** ***G 07C 9/00***	EP 2294557*	MOBILE IDENTIFICATION TRANSMITTER OF A SECURITY SYSTEM
Humabs LLC, US	***C 07K 16/08*** ***G 01N 33/569*** ***A 61K 39/395***	EP 2303923*	HUMAN CYTOMEGALOVIRUS NEUTRALISING ANTIBODIES AND USE THEREOF
Hutchinson,US;	***C 07D 209/88*** ***C 07D 209/82*** ***A 61K 31/403*** ***A 61P 9/06***	EP 2300425*	CYCLOALKANE[B]INDOLE ANGTAGONISTS OF PROSTAGLANDIN D2 RECEPTORS
Hvidovre Hospital, DK	***G 01N 33/50*** ***G 01N 33/68*** ***G 01N 33/569***	EP 2228651	IP-10 Based Immunological Monitoring
ICOPAL A/S, DK	***E 04D 3/35*** ***B 32B 5/22*** ***B 32B 5/30*** ***B 32B 7/04*** ***B 32B 7/12*** ***B 32B 11/04*** ***B 32B 11/12***	EP 1990478	A building roof structure
Illbruck Sanitärtechnik GmbH, DE	***A 47K 3/40*** ***E 03C 1/28***	EP 2315544*	FOAM SHOWER BASE ELEMENT
Imclone LLC, US	***C 07K 16/28*** ***C 12N 15/13*** ***C 12N 5/10*** ***C 12N 15/63***	EP 2300500*	ANTI-FLT3 ANTIBODIES
IMEC, BE	***G 12B 21/02***	EP 2133883	Method for cost-efficient manufacturing diamond tips for ultra-high resolution electrical measurements and devices obtained thereof
IMEC, BE	***H 01L 21/02*** ***H 01L 21/8242*** ***C 23C 16/40*** ***H 01L 21/314*** ***H 01L 21/316*** ***C 23C 16/455***	EP 2166562	Method for forming a capacitor having a strontium/barium titanium oxide dielectric layer by means of ALD and memory device comprising such a capacitor
Immatics Biotechnologies GmbH, DE	***A 61K 38/10*** ***A 61P 35/00***	EP 2111867	Novel formulations of tumour-associated peptides binding to human leukocyte antigen (HLA) class I or II molecules for vaccines

(71)	(51)	Broj objave evropske prijave patenta	(54)
Immersion Corporation, US	***G 06F 3/01*** ***G 06F 3/048*** ***H 04M 1/725***	EP 2313820*	SYSTEMS AND METHODS FOR PHYSICS-BASED TACTILE MESSAGING
Immune Control, US	***A 61K 31/54***	EP 2318008*	BINDING AND INHIBITING 5-HT4 RECEPTOR
ImmunoGen, US	***A 61K 39/38***	EP 2300052*	NOVEL SYNERGISTIC EFFECTS
Immunomedics, US	***A 61K 39/395*** ***C 07K 16/18***	EP 2318048*	STRUCTURAL VARIANTS OF ANTIBODIES FOR IMPROVED THERAPEUTIC CHARACTERISTICS
Imperial College Healthcare NHS Trust, GB	***G 01N 33/50*** ***G 01N 33/53*** ***C 12Q 1/00***	EP 2300823*	BLOOD TRANSCRIPTIONAL SIGNATURE OF MYCOBACTERIUM TUBERCULOSIS INFECTION
Inbio Prof. Jürgen Büddefeld Dr. Peter Klauth, DE	***C 09K 11/06*** ***G 01N 21/64***	EP 2294159*	DISTANCE-CONTROLLED ENERGY TRANSFER DYE COMPLEXES
Incyte Corporation, US	***C 07D 401/10*** ***C 07D 487/04*** ***C 07D 253/07*** ***A 61K 31/53*** ***A 61P 35/00***	EP 2300455*	SALTS OF 2-FLUORO-N-METHYL-4-[7-(QUINOLIN-6-YL-METHYL) - IMIDAZO [1, 2-B] [1, 2, 4] TRIAZIN-2-YL] BENZAMIDE AND PROCESSES RELATED TO PREPARING THE SAME
Incyte Corporation, US	***C 07D 271/08*** ***A 61K 31/4245*** ***A 61P 1/00*** ***A 61P 11/00*** ***A 61P 17/00*** ***A 61P 19/00*** ***A 61P 25/00*** ***A 61P 27/00*** ***A 61P 29/00*** ***A 61P 31/00*** ***A 61P 35/00*** ***A 61P 37/00*** ***A 61P 43/00***	EP 2315756*	1,2,5-OXADIAZOLES AS INHIBITORS OF INDOLEAMINE 2,3-DIOXYGENASE
Indiana University Research and Technology, US	***A 61K 38/00***	EP 2300035*	GIP-BASED MIXED AGONISTS FOR TREATMENT OF METABOLIC DISORDERS AND OBESITY
Industrial Technology Research Institute, TW	***A 61K 31/58*** ***A 61P 31/12***	EP 2263676	Compositions for inhibiting or treating Hepatitis C viruses
Infa S.A., CH	***A 61J 1/20***	EP 2071917*	PACKAGING SYSTEM FOR PHARMACEUTICAL COMPOSITIONS AND KIT FOR INTRAVENOUS ADMINISTRATION
Infinity Pharmaceuticals, US	***A 61K 31/69*** ***A 61P 29/00***	EP 2073816*	BORONIC ACIDS AND ESTERS AS INHIBITORS OF FATTY ACID AMIDE HYDROLASE
Infinity Pharmaceuticals, US	***C 07D 407/04*** ***C 07D 405/04*** ***C 07D 307/94*** ***A 61K 31/4355*** ***A 61K 31/438***	EP 2316832	Cyclopamine analogues and methods of use thereof

(71)	(51)	Broj objave evropske prijave patenta	(54)
Infinity Pharmaceuticals, US	***C 07D 407/04*** ***C 07D 405/04*** ***C 07D 307/94*** ***A 61K 31/4355*** ***A 61K 31/438***	EP 2316833	Process for the preparation of Cyclopamine analogue compounds
Insect Biotech Co., KR	***A 61K 38/43*** ***A 61P 1/16*** ***A 23L 1/30***	EP 2101809*	PHARMACEUTICAL COMPOSITION CONTAINING ARAZYME FOR THE PREVENTION OF LIVER DYSFUNCTION
Insect Biotech Co., KR	***A 61K 38/16*** ***A 61P 35/00***	EP 2114431*	A COMPOSITION CONTAINING ARAZYME FOR THE PREVENTION AND TREATMENT OF CANCER
INSERM - Institut National de la Santé et de la,FR;	***C 12N 15/11*** ***C 07K 14/255*** ***A 61K 39/39***	EP 2300609*	NOVEL IMMUNOADJUVANT FLAGELLIN-BASED COMPOUNDS AND USE THEREOF
Institut National de la Recherche,FR;	***C 12Q 1/68***	EP 2310530*	METHOD FOR DIAGNOSING AND PREDICTING CEREBELLAR ATAXIA
INSTITUT PASTEUR DE LILLE, FR	***C 12N 15/11*** ***C 07K 14/255*** ***A 61K 39/39***	EP 2300609*	NOVEL IMMUNOADJUVANT FLAGELLIN-BASED COMPOUNDS AND USE THEREOF
Integra LifeSciences Corporation, US	***A 61F 2/42*** ***A 61F 2/28*** ***A 61F 2/30***	EP 2309950*	RESORBABLE MEDICAL IMPLANTS AND RELATED METHODS
Intellikine, US	***C 07D 487/04*** ***A 61K 31/505*** ***A 61K 31/519*** ***A 61P 35/00*** ***A 61P 21/00*** ***A 61P 29/00***	EP 2313414*	KINASE INHIBITORS AND METHODS OF USE
Intercell AG, AT	***A 61K 39/09*** ***C 07K 14/315*** ***G 01N 33/569***	EP 2298342	Peptides protective against s. pneumoniae and compositions, methods and uses relating thereto
Intermune, US	***A 61K 31/4412*** ***A 61P 11/00***	EP 2308491	Pirfenidone therapy and inducers of cytochrome P450
IPSEN PHARMA S.A.S., FR	***A 61K 38/00*** ***C 07K 2/00***	EP 2083842*	ANALOGS OF GHRELIN SUBSTITUTED AT THE N-TERMINAL
IPSEN PHARMA S.A.S., FR	***C 07K 14/62*** ***C 07K 14/46***	EP 2318433*	ANALOGUES OF GLUCOSE-DEPENDENT INSULINOTROPIC POLYPEPTIDE (GIP) MODIFIED AT N-TERMINAL
IPSEN PHARMA S.A.S., FR	***A 61K 38/00***	EP 2320923*	TRUNCATED ANALOGUES OF GLUCOSE-DEPENDENT INSULINOTROPIC POLYPEPTIDE
IRM LLC, BM	***C 07D 471/04*** ***C 07D 487/04*** ***A 61K 31/4985*** ***A 61K 31/4353*** ***A 61P 37/00***	EP 2300469*	FUSED NITROGEN CONTAINING HETEROCYCLES AND COMPOSITIONS THEREOF AS KINASE INHIBITORS

(71)	(51)	Broj objave evropske prijave patenta	(54)
IRM LLC, BM	***C 07D 213/74*** ***C 07D 239/48*** ***C 07D 239/95*** ***C 07D 401/12*** ***C 07D 401/14*** ***C 07D 403/12*** ***C 07D 403/14*** ***C 07D 413/12*** ***C 07D 417/12*** ***C 07D 451/02*** ***C 07D 453/02*** ***C 07D 471/04*** ***C 07D 473/16*** ***C 07D 487/04*** ***C 07D 487/08*** ***A 61K 31/506*** ***A 61P 25/00*** ***A 61P 37/00*** ***A 61P 31/00***	EP 2311807	Compounds and composition as protein kinase inhibitors
IRM LLC, BM	***C 07D 401/14*** ***C 07D 403/12*** ***C 07D 403/14*** ***C 07D 409/14*** ***C 07D 413/14*** ***A 61K 31/506***	EP 2318392*	PYRIMIDINE DERIVATIVES AS KINASE INHIBITORS
Iron Therapeutics Holdings AG, CH	***A 61K 33/26*** ***A 61K 33/00*** ***A 61K 31/4439*** ***A 61P 1/00*** ***A 61P 7/06***	EP 2303289*	MONO (IRON HYDROXYPYRONE) AND COMBINATION (IRON HYDROXYPYRONE AND GI INFLAMMATION INHIBITING AGENTS) COMPOSITIONS FOR ANAEMIA OR H. PYLORI INFECTIONS
Ironwood Pharmaceuticals, US	***C 07D 517/04*** ***A 61K 31/407*** ***A 61K 31/41*** ***A 61P 25/18*** ***A 61P 25/28*** ***A 61P 25/24***	EP 2297167*	SELENOPHENE AND SELENAZOLE CARBOXYLIC ACID DERIVATIVES
ISHIHARA SANGYO KAISHA, JP	***A 01N 43/50*** ***A 01N 25/22***	WO 2010021404	METHOD FOR CONTROLLING DEGRADATION OF AGRICULTURAL CHEMICAL ACTIVE INGREDIENT
ISHIHARA SANGYO KAISHA, JP	***A 01N 43/56*** ***A 01N 25/30*** ***A 01P 7/04*** ***A 01P 7/02*** ***A 01P 5/00*** ***A 01P 9/00***	EP 2306831*	PESTICIDAL COMPOSITION
ISHIHARA SANGYO KAISHA, JP	***A 01N 43/50*** ***A 01N 25/22***	EP 2320733*	METHOD FOR CONTROLLING DEGRADATION OF AGRICULTURAL CHEMICAL ACTIVE INGREDIENT
Isotechnika Pharma Inc., CA	***C 07K 7/64*** ***A 61K 38/13*** ***C 07K 1/113***	EP 2307446*	NONIMMUNOSUPPRESSIVE CYCLOSPORINE ANALOGUE MOLECULES

(71)	(51)	Broj objave evropske prijave patenta	(54)
ISTITUTO DI RICERCHE DI BIOLOGIA MOLECOLARE P., IT	***A 61P 31/14*** ***A 61K 38/07*** ***A 61K 38/06*** ***A 61K 38/08*** ***C 07K 5/08*** ***C 07K 5/10*** ***C 07K 5/12***	EP 2310095*	MACROCYCLIC QUINOXALINE COMPOUNDS AS HCV NS3 PROTEASE INHIBITORS
Istituto Luso Farmaco d'Italia S.p.A., IT	***A 61K 31/437*** ***A 61K 31/4709*** ***A 61K 31/496*** ***A 61K 31/573*** ***A 61K 38/08*** ***A 61P 19/02***	EP 2303268*	PHARMACEUTICAL COMPOSITIONS BASED ON KININ B2 RECEPTOR ANTAGONISTS AND CORTICOSTEROIDS, AND THEIR USE
ITALCEMENTI S.p.A., IT	***C 04B 28/02*** ***E 01C 1/00*** ***E 01C 11/22***	EP 2294029*	A PAVING WITH A POLLUTION-ABATING ACTIVITY AND A PHOTOCATALYTIC MIXTURE FOR ITS PREPARATION
Ivax Pharmaceuticals Ireland, IE	***G 06M 1/04*** ***G 06M 1/08***	EP 2135199*	METERED-DOSE INHALER
Jacob,IN;		WO 2009156472	A STONE PANEL
Jagotec AG, CH	***B 30B 11/34***	EP 2121297*	METHOD AND APPARATUS FOR PRODUCING A CENTRED COMPRESSION COATED TABLET
Jahier, IT	***F 24H 1/28***	EP 2307816*	FIRE TUBE CONDENSING BOILER FOR GENERATING HOT WATER
James Walker&Co. Ltd, GB	***F 16J 15/10***	EP 2310721*	SEAL
Janssen Pharmaceutica N.V., BE	***C 07D 489/08*** ***A 61K 31/485*** ***A 61P 25/32***	EP 2307420*	NALMEFENE DI-ESTER PRODRUGS
Janssen Pharmaceutica N.V., BE	***A 61K 31/497***	EP 2310012*	PROCESS FOR THE PREPARATION OF SUBSTITUTED PYRIMIDINE DERIVATIVES
Janssen Pharmaceutica N.V., BE	***C 07D 237/20*** ***C 07D 237/22*** ***C 07D 401/12*** ***A 61K 31/501*** ***A 61P 3/04***	EP 2310374*	SUBSTITUTED 6- (1-PIPERAZINYL) - PYRIDAZINES AS 5-HT6 RECEPTOR ANTAGONISTS
Janssen Pharmaceutica N.V., BE	***A 61K 51/04***	EP 2320956*	RADIOLABELLED TRP M8 RECEPTOR LIGANDS
Janssen Pharmaceutica NV, BE	***C 07D 215/14*** ***C 07D 401/04*** ***C 07D 413/04*** ***C 07D 417/04*** ***A 61K 31/496*** ***A 61P 31/04***	EP 2099759*	ANTIBACTERIAL QUINOLINE DERIVATIVES
Janssen Pharmaceutica NV, BE	***A 01N 43/58***	EP 2315521*	DIAMINO-PYRIDINE, PYRIMIDINE, AND PYRIDAZINE MODULATORS OF THE HISTAMINE H 4 RECEPTOR
Janssen Pharmaceutica, BE	***C 07D 471/04*** ***A 61K 31/496*** ***A 61P 1/14***	EP 2121683*	2-PIPERAZIN-1-YL-3H-IMIDAZO[4,5-B]PYRIDINE DERIVATIVES

(71)	(51)	Broj objave evropske prijave patenta	(54)
Janssen Pharmaceutica, BE	***A 01N 43/50*** ***A 61K 31/415*** ***C 07D 235/06*** ***C 07D 235/14*** ***C 07D 235/26*** ***C 07D 235/12*** ***C 07D 235/30*** ***C 07D 401/12*** ***C 07D 405/12*** ***A 61P 29/00***	EP 2124563*	BENZIMIDAZOLE TRPV1 INHIBITORS
Janssen Pharmaceutica, BE	***C 07K 14/64***	EP 2129359*	CHIMERIC PEPTIDE ANTAGONIST FOR GPCR135 OR GPCR142
Janssen Pharmaceutica, BE	***A 61K 31/4965***	EP 2296659*	DRUG COMBINATIONS COMPRISING A DGAT INHIBITOR AND A PPAR-AGONIST
Janssen Pharmaceutica, BE	***C 07C 215/44*** ***C 07C 217/52*** ***C 07C 313/08*** ***C 07C 213/02*** ***C 07C 213/08*** ***A 61K 31/135*** ***A 61K 31/335***	EP 2297089*	BENZOCYCLOHEPTANE AND BENZOXEPINE DERIVATIVES
Janssen Pharmaceutica, BE	***C 12Q 1/37*** ***C 07K 14/54*** ***G 01N 33/68***	EP 2297334*	BIOMARKER FOR ASSESSING RESPONSE TO CHYMASE TREATMENT
Janssen Pharmaceutica, BE	***C 07D 239/22*** ***C 07D 401/04*** ***C 07D 471/04*** ***C 07D 405/04*** ***A 61K 31/517*** ***A 61K 31/519*** ***A 61P 29/00***	EP 2300440*	3,4-DIHYDROPYRIMIDINE TRPA1 ANTAGONISTS
Janssen Pharmaceutica, BE	***C 07D 403/04*** ***A 61K 31/506***	EP 2303869*	PROCESS FOR THE PREPARATION OF BENZOIMIDAZOL-2-YL PYRIMIDINE DERIVATIVES
Janssen Pharmaceutica, BE	***A 61K 38/10*** ***A 61P 35/00***	EP 2307041*	DOSING REGIMEN
Janssen Pharmaceutica, BE	***C 07D 209/14*** ***C 07D 403/12*** ***A 61K 31/33*** ***A 61P 19/00***	EP 2307363*	PIPERIDYL ACRYLAMIDE ANTOGONISTS OF CCR2
Janssen Pharmaceutica, BE	***C 07D 213/74*** ***C 07D 213/84*** ***A 61K 31/496*** ***A 61P 25/00***	EP 2307374*	PIPERAZIN-1-YL-TRIFLUOROMETHYL-SUBSTITUTED-PYRIDINES AS FAST DISSOCIATING DOPAMINE 2 RECEPTOR ANTAGONISTS
Janssen Pharmaceutica, BE	***C 07D 213/24*** ***C 07D 401/04*** ***C 07D 407/04*** ***C 07D 409/04*** ***A 61K 31/216*** ***A 61P 25/28***	EP 2321278*	PYRIDINYL MODULATORS OF y-SECRETASE

(71)	(51)	Broj objave evropske prijave patenta	(54)
Jina Pharmaceuticals Inc., US	***A 61K 31/138*** ***A 61K 31/35*** ***A 61K 9/127*** ***C 07D 309/10*** ***A 61P 35/00***	EP 2101731*	ENDOXIFEN METHODS AND COMPOSITIONS
Johnson & Johnson Consumer Companies, US	***A 61Q 5/12*** ***A 61K 8/64*** ***A 61K 8/81*** ***A 61K 8/86***	EP 2313158*	METHODS AND KITS IMPARTING BENEFITS TO KERATIN-CONTAINING SUBSTRATES
Johnson & Johnson Consumer Companies, US	***A 61Q 5/12*** ***A 61Q 1/00*** ***A 61K 8/64*** ***A 61Q 17/00***	EP 2313159*	COMPOSITION FOR PROVIDING A BENEFIT TO A KERATIN-CONTAINING SUBSTRATE
Joiner's Bench AG, DE	***B 25B 27/10***	EP 2014419	Hydraulic pressing device, in particular for binding workpieces
Kannuu Pty Ltd, AU	***G 06F 3/023*** ***G 06F 17/21*** ***G 06F 17/22*** ***G 06F 17/27***	EP 2135177*	METHOD SYSTEM AND APPARATUS FOR ENTERING TEXT ON A COMPUTING DEVICE
Kapus, SI	***G 09G 3/32*** ***G 09F 13/00***	EP 2110806	Earmarked display with intelligent light points
Karl W. Niemann GmbH & Co. KG, DE	***B 29C 63/00***	EP 2313252*	METHOD FOR APPLYING EDGE STRIPS ONTO NARROW SURFACES OF IN PARTICULAR PLATE-SHAPED WORK PIECES AND WORK PIECES OBTAINED IN SAID MANNER
Karpovich, RU	***G 11B 33/04*** ***B 65D 85/58*** ***A 47B 81/06***	EP 2272399	DEVICE FOR STORING COMPACT DISCS
Katholieke Universiteit Leuven, BE	***A 61K 31/7068*** ***A 61K 31/7076*** ***A 61K 31/513***	EP 2303283*	ANTI-CANCER COMBINATION THERAPY
Kfm Technology, FR	***B 81C 1/00*** ***B 81B 7/02*** ***H 05K 5/06***	EP 2321216*	METHOD AND DEVICE FOR ENCAPSULATING MICROSTRUCTURES
KLEIN IBÉRICA, ES	***E 06B 3/46*** ***E 05F 5/00***	EP 2053190	Regulation mechanism for sliding doors
KLEIN IBÉRICA, ES	***E 05F 15/14*** ***E 05F 17/00***	EP 2241709	Simultaneous displacement device for sliding doors
Knauf Gips KG, DE	***C 04B 28/14*** ***F 24D 3/14*** ***C 04B 14/00***	EP 2210866	Thin-layer heat screed construction on partition and insulating layer
Kosenko,RU;	***G 11B 33/04*** ***B 65D 85/58*** ***A 47B 81/06***	EP 2272399	DEVICE FOR STORING COMPACT DISCS
Kraft Foods R & D, US	***A 23G 3/52*** ***A 23G 1/52*** ***A 23C 19/076*** ***A 23G 1/10*** ***A 23G 3/02*** ***B 01F 5/04***	EP 2298080	Method and apparatus for making aerated food product and product obtainable thereby
Krka Tovarna Zdravil, SI	***C 07D 401/12*** ***A 61K 31/4439***	EP 2303866*	CRYSTALLINE FORMS OF RABEPRAZOLE SODIUM

(71)	(51)	Broj objave evropske prijave patenta	(54)
KRKA, SI	***C 07D 205/08*** ***A 61K 31/397*** ***A 61P 3/00***	EP 2125715*	PROCESS FOR THE PREPARATION OF EZETIMIBE AND DERIVATIVES THEREOF
KRKA, SI	***C 07D 295/185***	EP 2297122*	NEW PROCESS FOR THE PREPARATION OF LEVOCETIRIZINE AND INTERMEDIATES THEREOF
KRKA, SI	***A 61K 9/50*** ***C 07D 333/20*** ***A 61K 9/26*** ***A 61K 9/30***	EP 2303244*	GASTRO-RESISTANT PHARMACEUTICAL ORAL COMPOSITIONS COMPRISING DULOXETINE OR ITS PHARMACEUTICALLY ACCEPTABLE DERIVATIVES
Krka, SI	***A 61K 9/20*** ***A 61K 9/28***	EP 2309992*	PHARMACEUTICAL COMPOSITION COMPRISING A STATIN
KRKA, SI	***C 07D 453/02*** ***A 61P 13/10*** ***A 61K 31/439***	EP 2310387*	A PROCESS FOR THE PREPARATION OF SOLIFENACIN SALTS AND THEIR INCLUSION INTO PHARMACEUTICAL DOSAGE FORMS
Krka, SI	***C 07D 471/04***	EP 2321312*	PROCESS FOR THE PREPARATION OF PALIPERIDONE
Krüger GmbH & Co. KG, DE	***A 23L 1/29*** ***A 23L 1/236*** ***A 23L 2/00*** ***A 23L 2/56*** ***A 23L 2/60*** ***A 23F 3/00*** ***A 23F 5/00***	EP 2296496*	GRANULATES FOR THE PREPARATION OF REDUCED-CALORIE INSTANT DRINKS
KT & G Co., KR	***A 61K 31/33*** ***A 61K 31/453*** ***A 61K 9/32*** ***A 61P 3/10*** ***A 61P 3/04*** ***A 61K 31/353*** ***A 61K 31/34***	EP 2094262*	PHARMACEUTICAL COMPOSITION CONTAINING PHENANTHRENEQUINONE-BASED COMPOUND FOR INTESTINE DELIVERY SYSTEM
KT & G Co., KR	***A 61K 31/33*** ***A 61K 31/453*** ***A 61K 9/32*** ***A 61P 3/10*** ***A 61P 3/04*** ***A 61K 31/353*** ***A 61K 31/34***	EP 2099448*	PHARMACEUTICAL COMPOSITION FOR TREATMENT AND PREVENTION OF RESTENOSIS
KT & G Co., KR	***A 61K 31/33*** ***A 61K 31/453*** ***A 61K 9/32*** ***A 61P 3/10*** ***A 61P 3/04*** ***A 61K 31/353*** ***A 61K 31/34***	EP 2099449*	PHARMACEUTICAL COMPOSITION FOR THE TREATMENT AND PREVENTION OF DISEASES INVOLVING IMPOTENCE
KT & G Co., KR	***A 61K 31/33*** ***A 61K 31/453*** ***A 61K 9/32*** ***A 61P 3/10*** ***A 61P 3/04*** ***A 61K 31/353*** ***A 61K 31/34***	EP 2101757*	COMPOUND FOR TREATMENT OR PREVENTION OF PROSTATE-RELATED DISEASES AND PHARMACEUTICAL COMPOSITION OF COLON DELIVERY SYSTEM CONTAINING THE SAME

(71)	(51)	Broj objave evropske prijave patenta	(54)
Kudos Pharmaceuticals Limited,GB;	***A 61K 31/00*** ***A 61K 31/502*** ***A 61P 35/00***	EP 2305221	Dna damage repair inhibitors for treatment of cancer
Kyowa Hakko Kirin Co., JP	***A 61K 45/00*** ***A 61K 31/343*** ***A 61K 31/427*** ***A 61K 31/4439*** ***A 61K 31/506*** ***A 61K 31/519*** ***A 61K 31/52*** ***A 61K 31/522*** ***A 61P 25/04*** ***A 61P 43/00*** ***C 07D 417/14*** ***C 07D 473/06*** ***C 07D 473/34*** ***C 07D 487/04*** ***C 07D 487/14*** ***C 07D 495/04***	EP 2308509	INHIBITOR OF ANALGESIC TOLERANCE
Kyowa Hakko Kirin Co., JP	***A 61K 45/00*** ***A 61K 31/427*** ***A 61K 31/519*** ***A 61K 31/52*** ***A 61P 25/06***	EP 2322223	THERAPEUTIC AGENT FOR MIGRAINE
La Marzocco S.r.l., IT	***A 47J 31/00*** ***A 47J 31/46*** ***A 47J 31/36***	EP 2299878*	ESPRESSO COFFEE MACHINE WITH PREINFUSION DEVICE
La mécanique moderne, FR	***B 01J 2/20*** ***B 30B 11/20***	EP 2218497	Apparatus for the production of pellets for a continuous screw press triturating oleous seeds
L'AIR LIQUIDE,FR;	***B 65D 85/04*** ***B 65D 5/60***	EP 2230194	Packaging for a plurality of coils of feedwire
Lalley Brothers Scientific, US	***G 03B 21/56*** ***G 09B 9/30*** ***G 09B 27/00*** ***H 04N 9/31***	EP 2069865*	THREE-DIMENSIONAL INTERNAL BACK-PROJECTION SYSTEM AND METHOD FOR USING THE SAME
Le Centre National De La Recherche Scientifique,FR;	***C 12N 9/42*** ***C 12N 15/74*** ***C 12P 21/02*** ***C 12N 15/62*** ***C 12P 7/10***	EP 2318524*	CONSTRUCTS AND METHODS FOR THE PRODUCTION AND SECRETION OF POLYPEPTIDES
Lensvector Inc., US	***H 01B 1/12*** ***C 08J 3/28*** ***C 08L 57/00*** ***G 02F 1/133*** ***G 02F 1/1343***	EP 2297747*	ELECTRO-OPTICAL DEVICES USING DYNAMIC RECONFIGURATION OF EFFECTIVE ELECTRODE STRUCTURES
Leon Engineering S.p.a., SM	***F 23G 5/027*** ***F 23G 5/08***	EP 2307803*	COMBUSTION MATERIAL PROCESS AND RELATED APPARATUS
Leon Engineering S.p.a., SM	***A 01G 9/18***	EP 2309841*	APPARATUS FOR REDUCING CARBON DIOXIDE CONTAINED IN COMBUSTION SMOKES
Les Laboratoires Servier, FR	***C 07D 209/52*** ***A 61K 31/403*** ***A 61P 25/00*** ***A 61P 3/04***	EP 2133333	New azabicyclic derivatives, method of preparing same and pharmaceutical compositions containing them

(71)	(51)	Broj objave evropske prijave patenta	(54)
Les Laboratoires Servier, FR	***A 61K 31/165*** ***A 61P 25/24***	EP 2295050	Use of agomelatine for the preparation of medicaments for the treatment of sleep disorders in depressed patients
Les Laboratoires Servier, FR	***A 61K 31/4045*** ***A 61K 31/55*** ***A 61K 45/06*** ***A 61P 9/12***	EP 2298297	Combination of an inhibitor of the If current of the sinus node and an inhibitor of the angiotensin converting enzyme
Les Laboratoires Servier, FR	***A 61K 31/165*** ***A 61P 25/24*** ***A 61K 31/22***	EP 2301527	Association of agomelatine with a mood stabilizer, and pharmaceutical compositions comprising them
Les Laboratoires Servier, FR	***C 07D 471/04*** ***C 07D 487/04*** ***A 61K 31/498*** ***A 61P 35/00*** ***C 07D 471/14*** ***C 07D 241/04*** ***C 07D 213/36*** ***C 07D 211/70*** ***C 07D 207/20*** ***A 61K 31/4985***	EP 2303880*	NOVEL TRICYCLIC DERIVATIVES, PROCESS FOR THE PREPARATION THEREOF AND PHARMACEUTICAL COMPOSITIONS CONTAINING SAME
Lifescan, US	***A 61B 5/00*** ***G 06F 3/048*** ***H 04L 9/32*** ***G 08B 1/08*** ***G 06F 15/16*** ***G 06N 5/02***	EP 2315549*	ANALYTE MEASUREMENT AND MANAGEMENT DEVICE AND ASSOCIATED METHODS
Linosport Spor Ve Kamp Malzemeleri Sanayi Ticaret, TR	***A 45F 3/04*** ***A 45F 3/08***	EP 2303060*	MILITARY PERSONNEL EXIGENCIES AND AMMUNITION CARRIER SYSTEM
L'Institut National Des Sciences Appliquees (INSA), FR	***C 12N 9/42*** ***C 12N 15/74*** ***C 12P 21/02*** ***C 12N 15/62*** ***C 12P 7/10***	EP 2318524*	CONSTRUCTS AND METHODS FOR THE PRODUCTION AND SECRETION OF POLYPEPTIDES
Lippiello,US;	***A 61K 31/13*** ***A 61K 31/4545*** ***A 61K 31/439*** ***A 61K 31/506*** ***A 61K 45/06*** ***A 61P 27/02***	EP 2296640*	METHODS FOR PREVENTING THE DEVELOPMENT OF RETINOPATHY BY THE ORAL ADMINISTRATION OF NNR LIGANDS
London Equitable Limited in its capacity as, GB	***A 61H 23/04***	EP 2306958*	DEVICE FOR PNEUMATIC TREATMENT OF AN INFERIOR LIMB HAVING PERIPHERAL ARTERIOPATHY PROBLEMS
L'Oréal, FR	***A 61K 8/37*** ***A 61K 8/92*** ***A 61Q 1/14***	EP 2218439	Cleansing gel comprising jojoba oil
L'Oréal, FR	***A 61K 8/39*** ***A 61K 8/60*** ***A 61Q 19/00***	EP 2218440	Composition including a sucrose ester and a polyglycerol ester
L'Oréal, FR	***C 07D 403/12*** ***C 07D 403/14*** ***A 61K 8/49*** ***A 61Q 5/12***	EP 2307403*	COSMETIC COMPOSITION, COSMETIC TREATMENT METHOD AND 4-OXO-1,4-DIHYDROPYRIMIDIN-2-YL COMPOUNDS

(71)	(51)	Broj objave evropske prijave patenta	(54)
Lucite International, US	***C 08G 18/00*** ***C 08J 7/04*** ***C 09D 175/04*** ***C 08G 18/40*** ***B 32B 27/08*** ***B 32B 27/30*** ***B 32B 27/40*** ***C 09J 175/04***	EP 2078047*	POLYURETHANE ADHESIVE
Ludwig-Maximilians-Universität München,DE;	***C 07D 231/06*** ***C 07D 231/12*** ***C 07D 233/22*** ***C 07D 261/08*** ***C 07D 271/06***	EP 2307381*	NEW DRUGS FOR INHIBITING AGGREGATION OF PROTEINS INVOLVED IN DISEASES LINKED TO PROTEIN AGGREGATION AND/OR NEURODEGENERATIVE DISEASES
Ludwig-Maximilians-Universität, DE	***G 01N 33/92*** ***C 11C 3/10***	EP 2297584*	HIGH THROUGHPUT METHOD FOR ANALYZING THE FATTY ACID COMPOSITION IN PLASMA PHOSPHOGLYCERIDES
L'Universite De La Mediterranee,FR;	***C 12N 9/42*** ***C 12N 15/74*** ***C 12P 21/02*** ***C 12N 15/62*** ***C 12P 7/10***	EP 2318524*	CONSTRUCTS AND METHODS FOR THE PRODUCTION AND SECRETION OF POLYPEPTIDES
L'Universite De Provence,FR;	***C 12N 9/42*** ***C 12N 15/74*** ***C 12P 21/02*** ***C 12N 15/62*** ***C 12P 7/10***	EP 2318524*	CONSTRUCTS AND METHODS FOR THE PRODUCTION AND SECRETION OF POLYPEPTIDES
Lupin Limited, IN	***A 61K 9/20*** ***A 61K 9/28*** ***A 61K 31/554***	EP 2309994*	SUSTAINED RELEASE PHARMACEUTICAL COMPOSITIONS COMPRISING QUETIAPINE
Lutonix, US	***A 61L 29/16*** ***A 61L 31/16***	EP 2322235	Drug releasing coatings for medical devices
MAG Instrument, US	***H 01L 33/00***	EP 2319096*	LED MODULE
MAG Instrument, US	***F 21L 4/00***	EP 2321569*	PORTABLE LIGHTING DEVICES
Magcanica, US	***G 01L 3/10***	EP 2126650*	DEVICES AND METHODS FOR DETECTING RATES OF CHANGE OF TORQUE
Magyar Tudományos Akadémia Kémiai Kutatóközpont, HU	***C 10G 3/00*** ***C 10L 1/02***	EP 2305778	Fuel and fuel additives capable for use for internal combustion engines and process for the production thereof
Mallard Creek Polymers, US	***A 61K 8/72***	EP 2306966*	CATIONIC LATEX AS A CARRIER FOR ACTIVE INGREDIENTS AND METHODS FOR MAKING AND USING THE SAME
Marathon GTF Technology, US	***C 07C 2/02***	EP 2300398*	PROCESSES FOR CONVERTING GASEOUS ALKANES TO LIQUID HYDROCARBONS
Marathon GTF Technology, US	***C 07C 17/42***	EP 2303820*	HYDROGENATION OF MULTI-BROMINATED ALKANES
Marathon GTF Technology, US	***C 07C 17/00***	EP 2310346*	BROMINE-BASED METHOD AND SYSTEM FOR CONVERTING GASEOUS ALKANES TO LIQUID HYDROCARBONS USING ELECTROLYSIS FOR BROMINE RECOVERY

(71)	(51)	Broj objave evropske prijave patenta	(54)
Maria Clementine Martin Klosterfrau, DE	***A 61K 36/185*** ***A 61K 36/68*** ***A 61P 11/00***	EP 2293805*	LOZENGE COMPOSITION FOR TREATING INFLAMMATORY DISEASES OF THE MOUTH AND PHARYNX
Maria Clementine Martin Klosterfrau, DE	***A 61K 31/045*** ***A 61K 31/35*** ***A 61P 11/00*** ***A 61P 11/06*** ***A 61P 11/08***	EP 2320878*	MONOTERPENES FOR TREATING RESPIRATORY TRACT DISEASES, IN PARTICULAR BRONCHOPULMONARY DISEASES
MARINE RESOURCES EXPLORATION INTERNATIONAL B.V., NL	***E 21C 45/00***	EP 2318657*	A METHOD OF MINING AND PROCESSING SEABED SEDIMENT
Marinomed Biotechnologie GmbH, AT	***A 61K 31/731*** ***A 61P 11/06*** ***A 61P 27/14*** ***A 61P 37/08***	EP 2303287*	ANTIALLERGIC MARINE BIOPOLYMERS
Maritime Oppdrett AS, NO	***A 01K 61/00***	EP 2306813*	FISHFARMING PEN
Marliere, FR	***C 12P 5/02*** ***C 12N 15/63*** ***C 12N 9/88*** ***C 12N 15/60*** ***C 12N 1/20*** ***C 12N 1/21***	EP 2304040*	PRODUCTION OF ALKENES BY ENZYMATIC DECARBOXYLATION OF 3-HYDROXYALKANOIC ACIDS
Marrel,FR;	***B 30B 9/30*** ***B 65B 27/06*** ***B 30B 13/00*** ***B 65G 1/16*** ***B 65G 69/00*** ***B 29D 30/06***	EP 2315657*	MACHINE AND METHOD FOR COMPACTING AN ANNULAR PART MADE OF A FLEXIBLE MATERIAL
Maruishi Pharmaceutical Co., JP	***A 01N 31/02*** ***A 01N 37/36*** ***A 01N 59/16*** ***A 01P 3/00*** ***A 61K 31/045*** ***A 61K 31/191*** ***A 61K 31/194*** ***A 61K 31/315*** ***A 61L 2/18*** ***A 61P 31/02***	EP 2135507	DISINFECTANT
Maschio Gaspardo S.p.A., IT	***A 01B 33/08***	EP 2232972	Rotary harrow
Massachusetts Institute of Technology, US	***G 01L 1/24*** ***G 01L 5/16***	EP 2294375*	TACTILE SENSOR USING ELASTOMERIC IMAGING
Massachusetts Institute of Technology, US	***C 22C 9/00*** ***C 22C 19/03*** ***F 16F 7/00*** ***F 16F 7/02*** ***F 16F 15/00***	EP 2307585*	SUPERELASTIC ALLOY STRUCTURAL GEOMETRY FOR ULTRAHIGH MECHANICAL DAMPING
Massachusetts Institute of Technology, US	***B 01D 57/02***	EP 2313182*	AMPLIFIED ELECTROKINETIC FLUID PUMPING SWITCHING AND DESALTING

(71)	(51)	Broj objave evropske prijave patenta	(54)
Max-Planck-Gesellschaft zur Förderung, DE	***C 07D 231/06*** ***C 07D 231/12*** ***C 07D 233/22*** ***C 07D 261/08*** ***C 07D 271/06***	EP 2307381*	NEW DRUGS FOR INHIBITING AGGREGATION OF PROTEINS INVOLVED IN DISEASES LINKED TO PROTEIN AGGREGATION AND/OR NEURODEGENERATIVE DISEASES
Mayo Foundation for Medical Education and Research, US	***A 61K 38/18*** ***A 61K 38/48*** ***A 61P 9/00*** ***A 61K 38/20***	EP 2303310*	COMPOSITIONS AND METHODS FOR USING CELLS TO TREAT HEART TISSUE
Mazence Inc.,KR;	***A 61K 31/33*** ***A 61K 31/453*** ***A 61K 9/32*** ***A 61P 3/10*** ***A 61P 3/04*** ***A 61K 31/353*** ***A 61K 31/34***	EP 2094262*	PHARMACEUTICAL COMPOSITION CONTAINING PHENANTHRENEQUINONE-BASED COMPOUND FOR INTESTINE DELIVERY SYSTEM
Mazence Inc.,KR;	***A 61K 31/33*** ***A 61K 31/453*** ***A 61K 9/32*** ***A 61P 3/10*** ***A 61P 3/04*** ***A 61K 31/353*** ***A 61K 31/34***	EP 2099448*	PHARMACEUTICAL COMPOSITION FOR TREATMENT AND PREVENTION OF RESTENOSIS
Mazence Inc.,KR;	***A 61K 31/33*** ***A 61K 31/453*** ***A 61K 9/32*** ***A 61P 3/10*** ***A 61P 3/04*** ***A 61K 31/353*** ***A 61K 31/34***	EP 2099449*	PHARMACEUTICAL COMPOSITION FOR THE TREATMENT AND PREVENTION OF DISEASES INVOLVING IMPOTENCE
Mazence Inc.,KR;	***A 61K 31/33*** ***A 61K 31/453*** ***A 61K 9/32*** ***A 61P 3/10*** ***A 61P 3/04*** ***A 61K 31/353*** ***A 61K 31/34***	EP 2101757*	COMPOUND FOR TREATMENT OR PREVENTION OF PROSTATE-RELATED DISEASES AND PHARMACEUTICAL COMPOSITION OF COLON DELIVERY SYSTEM CONTAINING THE SAME
Mazzega, IT	***F 23J 15/04***	EP 2221538	Energy recovery device
Mazzega, IT	***F 23J 15/04***	EP 2221539	Energy recovery apparatus
Mecaplastic SAS, FR	***B 29C 51/16*** ***B 29C 51/10*** ***B 65D 5/56*** ***B 29C 51/42***	EP 2300213*	A METHOD FOR PRODUCING FOOD PACKAGING AND SUCH A FOOD PACKAGING
Meccanotecnica Umbra S.p.A., IT	***F 16J 15/34***	EP 2310724*	FLUID MIXER WITH ROTARY SHAFTS AND RELATIVE SEAL UNIT.
Medecell do Brasil Comércio e Importacao Ltda., BR	***A 61N 1/36*** ***A 61N 1/34***	EP 2263744	Assembly arrangement for a bandage holding a transcutaneous electrical nerve stimulation device
MED-EL Elektromedizinische Geräte GmbH, AT	***A 61N 1/00***	EP 2129428*	IMPLANTABLE AUDITORY STIMULATION SYSTEMS HAVING A TRANSDUCER AND A TRANSDUCTION MEDIUM

(71)	(51)	Broj objave evropske prijave patenta	(54)
Medical and Biological Laboratories Co., JP	***C 07K 16/18*** ***A 61K 49/00*** ***C 07K 16/46*** ***G 01N 33/15*** ***G 01N 33/50*** ***G 01N 33/53*** ***C 12N 15/09***	EP 2319869	ANTIBODY AGAINST OXIDIZED LDL/ß²GPI COMPLEX AND USE OF THE SAME
Meiji Dairies Corporation, JP	***A 61K 31/122*** ***A 61P 25/02*** ***A 61P 25/04***	EP 2196200	Cyclohexenone derivative for treating or preventing hypesthesia or hyperesthesia caused by diabetes
Meiji Seika Kaisha, JP	***C 12N 15/09*** ***C 12N 1/15*** ***C 12N 1/21*** ***C 12P 17/18***	EP 2319923	PYRIPYROPENE A BIOSYNTHETIC GENE
Menarini International Operations Luxembourg S.A., LU	***A 61K 39/39*** ***A 61K 39/395***	EP 2228073	Pharmaceutical compositions containing monoclonal anti idiotypic anti-ca-125 antibody and aluminium derivatives
Mepha GmbH, CH	***A 61K 9/50*** ***A 61K 31/4439***	EP 2313088*	ORAL PHARMACEUTICAL FORMULATION FOR OMEPRAZOLE COMPRISING A SPECIFIC SEPARATION LAYER
MERCIAN CORPORATION, JP	***C 07D 407/06*** ***A 61K 31/496*** ***A 61P 35/00***	EP 2116542	SOLID OF MACROLIDE COMPOUND, METHOD FOR PRODUCTION THEREOF, AND PHARMACEUTICAL COMPOSITION COMPRISING THE SAME
Merck Serono S.A., CH	***C 12Q 1/68***	EP 2313522*	USE OF GENETIC MARKERS FOR IDENTIFYING THE RESPONSE TO INTERFERON TREATMENT IN MULTIPLE SCLEROSIS PATIENTS
Merck Sharp & Dohme Corp., US	***A 61K 9/20*** ***A 61K 31/00***	EP 2303238*	SOLID DOSAGE FORMULATIONS OF TELCAGEPANT POTASSIUM
Merck Sharp & Dohme Corp.,US;	***A 61P 31/14*** ***A 61K 38/07*** ***A 61K 38/06*** ***A 61K 38/08*** ***C 07K 5/08*** ***C 07K 5/10*** ***C 07K 5/12***	EP 2310095*	MACROCYCLIC QUINOXALINE COMPOUNDS AS HCV NS3 PROTEASE INHIBITORS
Merial Limited, US	***A 61K 38/18*** ***A 61K 48/00*** ***A 61P 13/12***	EP 2228071	Intra-vascular kidney gene therapy with plasmid encoding BMP-7
Merrimack Pharmaceuticals, US	***C 12Q 1/68*** ***C 07K 16/32***	EP 2318548*	METHODS AND SYSTEMS FOR PREDICTING RESPONSE OF CELLS TO A THERAPEUTIC AGENT
Merz Pharma GmbH & Co. KGaA, DE	***A 61K 8/04*** ***A 61K 8/42*** ***A 61K 8/65*** ***A 61K 8/73*** ***A 61Q 19/10***	WO 2010022873	LIPOSOMAL STRUCTURES FORMING ISOMETRIC AGGLOMERATES, ESPECIALLY BATH BEADS, THE PRODUCTION AND USE THEREOF
Merz Pharma GmbH & Co. KGaA, DE	***A 61K 47/48*** ***A 61K 31/13*** ***A 61K 9/08*** ***A 61K 47/10*** ***A 61K 47/12***	EP 2310053*	PHARMACEUTICAL COMPOSITIONS COMPRISING A COMPLEX OF AMINOCYCLOHEXANE DERIVATIVES AND CYCLODEXTRIN

(71)	(51)	Broj objave evropske prijave patenta	(54)
Merz Pharma GmbH & Co. KGaA, DE	***A 61K 31/13*** ***A 61P 27/16*** ***A 61P 43/00***	EP 2315586*	1-AMINO-ALKYLCYCLOHEXANE DERIVATIVES FOR THE TREATMENT OF SLEEP DISORDERS
Merz Pharma GmbH & Co. KGaA, DE	***A 61K 8/04*** ***A 61K 8/42*** ***A 61K 8/65*** ***A 61K 8/73*** ***A 61Q 19/10***	EP 2317968*	LIPOSOMAL STRUCTURES FORMING ISOMETRIC AGGLOMERATES, ESPECIALLY BATH BEADS, THE PRODUCTION AND USE THEREOF
Messer Group GmbH, DE	***C 04B 2/10***	EP 2230223	Method and device for producing calcium
MethylGene Inc., CA	***C 07D 207/14*** ***A 61K 31/40*** ***A 61K 31/4025*** ***A 61K 31/4439*** ***A 61K 31/5377*** ***A 61P 35/00*** ***C 07D 401/04*** ***C 07D 401/12*** ***C 07D 405/12*** ***C 07D 413/12***	EP 2134680*	INHIBITORS OF HISTONE DEACETYLASE
Mikrobiologicky Ustac Avcr V.v.i., CZ	***C 12N 15/55*** ***C 12N 9/84***	EP 2109672*	DNA SEQUENCE ENCODING PENICILLIN ACYLASE, NOVEL RECOMBINANT DNA CONSTRUCTS AND RECOMBINANT MICROORGANISMS CARRYING THIS SEQUENCE
MILLENNIUM PHARMACEUTICALS, US	***C 07D 409/04*** ***C 07D 409/14*** ***C 07D 417/04*** ***A 61K 31/427*** ***A 61K 31/4196*** ***A 61K 31/5377*** ***A 61P 35/00*** ***A 61P 29/00*** ***A 61P 9/00***	EP 2313399*	THIOPHENE OR THIAZOLE DERIVATIVES AND THEIR USE AS PI3K INHIBITORS
Millennium Pharmaceuticals, US	***C 07F 5/02*** ***C 07F 5/04*** ***C 07F 5/06*** ***A 61K 38/05*** ***A 61P 35/00*** ***A 61P 29/00***	EP 2318419*	BORONATE ESTER COMPOUNDS AND PHARMACEUTICAL COMPOSITIONS THEREOF
Mitsubishi Tanabe Pharma Corporation,JP;	***C 07D 413/14*** ***C 07D 265/30*** ***C 07D 265/32***	EP 2221304	Method for synthesizing intermediate compound for synthesizing a pharmaceutical agent
Mitsubishi Tanabe Pharma Corporation,JP;	***C 07D 413/14*** ***C 07D 239/26***	EP 2221305	Method for synthesizing intermediate compound for synthesizing a pharmaceutical agent
Mitsubishi Tanabe Pharma Corporation,JP;	***C 07D 487/04*** ***A 61K 31/519*** ***A 61P 25/00*** ***A 61P 35/00*** ***C 07D 519/00***	EP 2307416*	SUBSTITUTED TRICYCLIC DERIVATIVES AGAINST NEURODEGENERATIVE DISEASES

(71)	(51)	Broj objave evropske prijave patenta	(54)
Mitsubishi Tanabe Pharma Corporation,JP;	***C 07D 241/52*** ***C 07D 401/04*** ***A 61K 31/497*** ***A 61P 25/28***	EP 2321286*	SUBSTITUTED N-OXIDE PYRAZINE DERIVATIVES
Mitsubishi Tanabe Pharma Corporation,JP;	***C 07D 401/04*** ***C 07D 487/04*** ***A 61K 31/53*** ***A 61P 25/28*** ***A 61P 3/10*** ***A 61P 35/00*** ***A 61P 33/06***	EP 2321295*	4-(PYRIDIN-4-YL)-1H-[1,3,5]TRIAZIN-2-ONE DERIVATIVES AS GSK3-BETA INHIBITORS FOR THE TREATMENT OF NEURODEGENERATIVE DISEASES
Mitsubishi Tanabe Pharma Corporation,JP;	***C 07D 471/04*** ***A 61K 31/519*** ***A 61P 31/10*** ***A 61P 17/14*** ***A 61P 25/00***	EP 2321313*	SUBSTITUTED PYRIMIDO [2, 1-A]ISOQUINOLIN-4-ONE DERIVATIVES
Mitsubishi Tanabe Pharma Corporation,JP;	***C 07D 471/04*** ***A 61K 31/519*** ***A 61P 25/00***	EP 2321314*	SUBSTITUTED PYRIMIDONE DERIVATIVES
Mitsubishi Tanabe Pharma Corporation,JP;	***C 07D 471/04*** ***A 61K 31/519*** ***A 61P 25/00***	EP 2321315*	SUBSTITUTED ALKYL PYRIMIDIN-4-ONE DERIVATIVES
Mitsubishi Tanabe Pharma Corporation,JP;	***C 07D 471/04*** ***A 61K 31/519*** ***A 61P 25/00***	EP 2321316*	SUBSTITUTED PYRIMIDIN-4-ONE DERIVATIVES
MOL Magyar Olaj- és Gázipari Nyrt.,HU;	***C 10G 3/00*** ***C 10L 1/02***	EP 2305778	Fuel and fuel additives capable for use for internal combustion engines and process for the production thereof
Morphotek, US	***C 07K 16/28***	EP 2137217*	METHODS FOR INHIBITING THE BINDING OF ENDOSIALIN TO LIGANDS
Motorola Solutions, US	***H 04L 29/06***	EP 1986392	Method for route optimization between mobile entities
N.E.D. Silicon S.P.A., IT	***C 01B 33/025*** ***C 01B 33/037*** ***C 30B 13/00***	EP 2297034*	METHOD FOR PREPARING HIGH-PURITY METALLURGICAL-GRADE SILICON
N.E.D. Silicon S.P.A., IT	***C 01B 33/025*** ***C 01B 33/037*** ***C 30B 13/00***	EP 2297035*	METHOD AND APPARATUS FOR PURIFYING METALLURGICAL GRADE SILICON BY DIRECTIONAL SOLIDIFICATION AND FOR OBTAINING SILICON INGOTS FOR PHOTOVOLTAIC USE
N.M.G Environmental Development Co., JP	***B 09B 3/00*** ***B 01D 1/00*** ***B 01D 5/00*** ***B 01D 29/11*** ***B 01D 53/40*** ***B 01D 53/77*** ***B 01D 53/86*** ***C 02F 1/04*** ***C 02F 3/02***	EP 2111931	METHOD FOR DISPOSAL OF ORGANIC WASTE MATERIAL AND APPARATUS FOR THE METHOD
Nabriva Therapeutics AG, AT	***C 07C 323/52*** ***C 07D 211/60*** ***A 61K 31/215*** ***A 61K 31/4458*** ***A 61P 31/04***	EP 2321272*	ORGANIC COMPOUNDS

(71)	(51)	Broj objave evropske prijave patenta	(54)
Narr Isoliersysteme GmbH, DE	***E 04B 1/343***	EP 1892346	Dismantleable room module of wall panels interconnected by profiles
National University Corporation Okayama University,JP;	***C 07K 16/18*** ***A 61K 49/00*** ***C 07K 16/46*** ***G 01N 33/15*** ***G 01N 33/50*** ***G 01N 33/53*** ***C 12N 15/09***	EP 2319869	ANTIBODY AGAINST OXIDIZED LDL/ß²GPI COMPLEX AND USE OF THE SAME
Nederlandse Organisatie voor Toegepast, NL	***G 01S 13/34*** ***G 01S 13/74***	EP 2312334	Method for measuring the distance between tags
Nektar Therapeutics, US	***A 61K 47/48***	EP 2134371*	OLIGOMER-OPIOID AGONIST CONJUGATES
Nektar Therapeutics, US	***A 61K 47/48***	EP 2293818*	CONJUGATES OF A CHOLINESTERASE MOIETY AND A POLYMER
Nektar Therapeutics, US	***A 61K 31/485*** ***A 61K 31/765*** ***A 61P 1/00*** ***A 61P 25/04***	EP 2300009*	ORAL ADMINISTRATION OF PERIPHERALLY-ACTING OPIOID ANTAGONISTS
Nektar Therapeutics, US	***A 61K 47/48***	EP 2319542	Segmented degradable polymers and conjugates made therefrom
Nelson, ES	***A 24F 25/02***	EP 2311332	DOUBLE-CHAMBER HUMIDIFIER TUBE
NERVIANO MEDICAL SCIENCES S.R.L., IT	***A 61K 47/48*** ***A 61P 35/00***	EP 2303332*	ANTHRACYCLINE DERIVATIVE CONJUGATES, PROCESS FOR THEIR PREPARATION AND THEIR USE AS ANTITUMOR COMPOUNDS
Neubourg Skin Care GmbH & Co. KG, DE	***A 61K 8/04*** ***A 61K 8/06*** ***A 61K 8/19*** ***A 61Q 19/00*** ***A 61K 9/107*** ***A 61K 47/02***	EP 2313054*	FOAMING SKINCARE CREAM
Nicox S.A., FR	***C 07J 41/00*** ***C 07J 71/00*** ***A 61K 31/573*** ***A 61P 5/44*** ***A 61P 27/02***	EP 2318427*	GLUCOCORTICOIDS ATTACHED TO NITRATE ESTERS VIA AN AROMATIC LINKER IN POSITION 21 AND THEIR USE IN OPHTHALMOLOGY
Niedersächsische Landesforsten, DE	***B 23D 59/00*** ***B 27B 17/00***	EP 2218533	Component for reversible attachment to a handheld cutting device
Nippon Soda Co., JP	***A 01N 25/10*** ***A 01N 47/40*** ***A 01P 7/02*** ***A 01P 7/04***	EP 2305029	METHOD FOR PRODUCING EXTENDED-RELEASE PREPARATION COMPOSITION
Nippon Soda Co., JP	***C 08G 81/00*** ***C 08F 4/00*** ***C 08F 8/00*** ***C 08F 289/00*** ***C 08G 64/00***	EP 2311900	Star polymer and method for producing the same

(71)	(51)	Broj objave evropske prijave patenta	(54)
Nippon Soda Co., JP	***A 01N 25/04*** ***A 01G 13/02*** ***A 01N 25/30*** ***A 01N 25/34*** ***A 01N 43/40*** ***A 01N 47/40*** ***A 01N 47/44*** ***A 01N 51/00*** ***A 01P 3/00*** ***A 01P 7/04***	EP 2322037	PESTICIDE COMPOSITION AND FRUIT BAG
Nippon Zoki Pharmaceutical Co., JP	***C 07D 333/78*** ***A 61K 31/381*** ***A 61K 31/4025*** ***A 61K 31/4535*** ***A 61K 31/496*** ***A 61K 31/5377*** ***A 61K 31/54*** ***A 61P 11/06*** ***A 61P 29/00*** ***A 61P 37/08*** ***A 61P 43/00***	EP 2319840	AMINOPROPYLIDENE DERIVATIVE
NIPRO CORPORATION, JP	***A 61K 47/10*** ***A 61K 9/20***	EP 1980272	Orally-disintegrating tablet and manufacturing method thereof
Nobel Biocare Services AG, CH	***A 61C 8/00***	EP 2223667	A dental implant, a dental implant kit and a method of connecting a super-structure
Nobel Biocare Services AG, CH	***A 61C 13/00*** ***A 61C 19/05*** ***A 61C 9/00***	EP 2229914	System and method for aligning virtual models
Nokia Siemens Networks Oy, FI	***H 04L 12/56***	EP 2200228	Method and system for forwarding of data packets
North Carolina State University, US	***H 01L 21/306*** ***H 01L 21/314*** ***H 01L 33/00*** ***C 30B 33/00***	EP 2319070*	PASSIVATION OF ALUMINUM NITRIDE SUBSTRATES
Novartis AG, CH	***A 61K 31/713*** ***C 12N 15/113***	EP 2223692	RNAi inhibition of alpha-ENaC expression
Novartis AG, CH	***A 61K 31/713*** ***C 12N 15/113***	EP 2223693	RNAi inhibition of alpha-ENaC expression
Novartis AG, CH	***A 61K 31/713*** ***C 12N 15/113***	EP 2223694	RNAi inhibition of alpha-ENaC expression
Novartis AG, CH	***A 61K 31/713*** ***C 12N 15/113***	EP 2223695	RNAi inhibition of alpha-ENaC expression
Novartis AG, CH	***C 12N 15/113*** ***A 61K 31/713***	EP 2224004	RNAi inhibition of alpha-ENaC expression
Novartis AG, CH	***C 12N 15/113*** ***A 61K 31/713***	EP 2224005	RNAi inhibition of alpha-ENaC expression

(71)	(51)	Broj objave evropske prijave patenta	(54)
Novartis AG, CH	***C 07C 311/48*** ***C 07D 231/12*** ***C 07D 213/36*** ***C 07D 243/08*** ***C 07D 261/08*** ***C 07D 307/14*** ***C 07D 307/52*** ***C 07D 333/36*** ***C 07D 413/12*** ***A 61K 31/18*** ***A 61P 29/00***	EP 2310359*	ORGANIC COMPOUNDS
Novartis AG, CH	***A 61K 31/277*** ***A 61K 31/55*** ***A 61P 33/00*** ***A 61P 33/10***	EP 2314292	Endoparasiticidal compositions
Novartis AG, CH	***A 61K 31/506*** ***A 61P 9/12***	EP 2315592*	TREATMENT OF PULMONARY ARTERIAL HYPERTENSION
Novartis AG, CH	***C 07D 209/08*** ***C 07C 271/24*** ***C 07D 203/14***	EP 2315748*	PROCESSES FOR THE PREPARATION OF 4-OXO-OCTAHYDRO-INDOLE-1-CARBOCYLIC ACID METHYL ESTER AND DERIVATIVES THEREOF
Novartis AG, CH	***C 07C 253/30*** ***C 07D 257/04***	EP 2316821	Process for the manufacture of organic compounds
Novartis AG, CH	***C 07D 401/12*** ***C 07D 401/14*** ***C 07D 403/12*** ***C 07D 413/14*** ***C 07D 471/04*** ***A 61K 31/501*** ***A 61K 31/506*** ***A 61P 35/00***	EP 2318389*	PYRIDAZINE DERIVATIVES AS SMO INHIBITORS
Novartis AG, CH	***C 12Q 1/68***	EP 2318545*	USE OF A COX-2 INHIBITOR FOR THE TREATMENT OF A COX-2 DEPENDENT DISORDER IN A PATIENT NOT CARRYING HLA ALLELES ASSOCIATED WITH HEPATOTOXICITY
Novartis AG,CH;	***A 61K 31/437***	EP 2296650*	IMMUNOMODULATION BY IAP INHIBITORS
Novelis, CA	***B 22D 7/12*** ***B 22D 30/00*** ***B 22D 9/00***	EP 2293892*	METHOD AND APPARATUS FOR REMOVAL OF COOLING WATER FROM INGOTS BY MEANS OF WATER JETS
Novelis, CA	***B 22D 7/02***	EP 2303490*	SEQUENTIAL CASTING OF METALS HAVING SIMILAR FREEZING RANGES
Noven Pharmaceuticals, US	***A 61K 9/70*** ***A 61K 31/565***	EP 2310001*	TRANSDERMAL ESTROGEN DEVICE AND DELIVERY
NOVEXEL, FR	***C 07D 471/08*** ***A 61K 31/439*** ***A 61P 31/04***	EP 2297147*	AZABICYCLIC COMPOUNDS, PREPARATION THEREOF AND USE OF SAME AS DRUGS, ESPECIALLY BETA-LACTAMASE INHIBITORS
Novozymes Adenium Biotech A/S, DK	***A 61K 38/17*** ***A 61P 19/02***	EP 2320928*	TREATMENT OF RHEUMATOID ARTHRITIS WITH MAMMAL BETA DEFENSINS
Novozymes Adenium Biotech A/S, DK	***A 61K 38/17***	EP 2320929*	TREATMENT OF INFLAMMATORY DISEASES WITH MAMMAL BETA DEFENSINS

(71)	(51)	Broj objave evropske prijave patenta	(54)
Novozymes Adenium Biotech A/S, DK	***A 61K 38/17***	EP 2320930*	TREATMENT OF INFLAMMATORY BOWEL DISEASES WITH MAMMAL BETA DEFENSINS
Nuevolution A/S, DK	***C 07D 207/08*** ***C 07D 207/16*** ***C 07D 401/14*** ***C 07D 407/14*** ***C 07D 471/10*** ***A 61K 31/4025*** ***A 61K 31/438*** ***A 61K 31/4439*** ***A 61K 31/454*** ***A 61P 35/00***	EP 2318363*	HETEROCYCLIC DERIVATIVES AS IAP BINDING COMPOUNDS
Nutreco Nederland B.V., NL	***A 23K 1/16*** ***A 23K 1/18***	EP 2269472	Animal feed for improving intestinal barrier properties
Obschestvo S Ogranichennoi Otvetstvennostiyu, RU	***C 12H 1/07*** ***C 12H 1/04*** ***B 01D 35/02*** ***B 01D 35/16*** ***B 01D 35/04***	EP 2133413	DEVICE FOR TREATING AND PURIFYING A LIQUID PRODUCT
Obthestvo S Ogranichennoyj Otvetstvennostjyu "WDS", RU	***A 61K 8/19*** ***A 61K 8/25*** ***A 61Q 11/00*** ***A 61P 1/02*** ***A 61K 6/00***	EP 2296612*	THERAPEUTIC AND PROPHYLACTIC FORMULATION FOR ORAL CARE
Octapharma AG, CH	***C 07K 14/755***	EP 2300497*	A PROCESS OF PURIFYING COAGULATION FACTOR VIII
Officine Meccaniche Ricci S.R.L., IT	***B 63C 5/02*** ***E 04G 1/22***	EP 2300311*	SUPPORT PLATFORM FOR WORKERS DEALING WITH MAINTENANCE AND CONSTRUCTION OF MEANS OF TRANSPORT
OLAJTERV Féválakozóés Tervezö Zrt.,HU;	***C 10G 3/00*** ***C 10L 1/02***	EP 2305778	Fuel and fuel additives capable for use for internal combustion engines and process for the production thereof
Omeros Corporation, US	***A 61K 31/54***	EP 2310016*	PDE10 INHIBITORS AND RELATED COMPOSITIONS AND METHODS
OMYA DEVELOPMENT AG, CH	***B 01J 20/04*** ***C 02F 1/28*** ***C 02F 1/56*** ***C 02F 103/28*** ***C 02F 103/32***	EP 1974806	Process for the purification of water
OMYA DEVELOPMENT AG, CH	***B 01J 20/04*** ***C 02F 1/28*** ***C 02F 1/56*** ***C 02F 103/28*** ***C 02F 103/32***	EP 1982759	Surface treated calcium carbonate and its use in waste water treatment
Omya Development AG, CH	***A 01N 35/02*** ***A 01N 37/04*** ***A 01N 59/00*** ***A 01P 1/00*** ***A 01N 35/04*** ***A 01N 59/08***	EP 2296463*	COMPOSITION HAVING BIOCIDE ACTIVITY FOR AQUEOUS PREPARATIONS
Omya Development AG, CH	***C 09C 1/02*** ***C 01F 5/24***	EP 2322581	Precipitated magnesium carbonate

(71)	(51)	Broj objave evropske prijave patenta	(54)
OncoMed Pharmaceuticals, US	***A 61K 39/395***	EP 2307051*	NOTCH-BINDING AGENTS AND ANTAGONISTS AND METHODS OF USE THEREOF
OncoMed Pharmaceuticals, US	***C 07K 16/28*** ***A 61K 39/395***	EP 2307459*	NOTCH1 RECEPTOR BINDING AGENTS AND METHODS OF USE THEREOF
OPKO Pharmaceuticals, US	***C 12N 15/113***	EP 2221378	Compositions and methods for regulating complement system
Optosecurity Inc., CA	***G 01N 23/04*** ***G 06F 3/048*** ***G 06T 3/40*** ***G 06T 5/00***	EP 2140253*	USER INTERFACE FOR USE IN SECURITY SCREENING PROVIDING IMAGE ENHANCEMENT CAPABILITIES AND APPARATUS FOR IMPLEMENTING SAME
Organoclick Aktiebolag, SE	***D 21H 17/14*** ***D 21H 17/15*** ***D 21H 17/18*** ***D 21H 17/24*** ***D 21H 17/25*** ***D 21H 17/28*** ***D 21H 17/37*** ***D 21H 17/43*** ***D 21H 19/12*** ***D 21H 21/18*** ***D 21H 23/24*** ***D 21H 23/28*** ***D 21H 23/50*** ***C 08B 15/10*** ***C 08L 1/02*** ***C 09D 101/10***	EP 2309059	Method of improving properties of cellulose-based fibrous sheet-formed materials
Orpha Swiss GmbH, CH	***A 61K 9/08*** ***A 61K 31/519*** ***A 61P 3/00***	EP 2309983*	PHARMACEUTICAL FORM COMPRISING TETRAHYDROBIOPTERIN
Orphazyme APS, DK	***A 61K 38/17*** ***A 61P 3/00***	EP 2318032*	USE OF HSP70 AS A REGULATOR OF ENZYMATIC ACTIVITY
Otonomy,US;	***A 61K 9/16*** ***A 61P 27/16*** ***A 61K 38/22*** ***A 61K 38/48***	EP 2296632*	CONTROLLED-RELEASE APOPTOSIS MODULATING COMPOSITIONS AND METHODS FOR THE TREATMENT OF OTIC DISORDERS
Otonomy,US;	***A 61K 9/127*** ***A 61K 9/16*** ***A 61K 47/34*** ***A 61P 27/16***	EP 2299976*	CONTROLLED RELEASE AURIS SENSORY CELL MODULATOR COMPOSITIONS AND METHODS FOR THE TREATMENT OF OTIC DISORDERS
Otonomy,US;	***A 61K 9/16*** ***A 61P 31/04*** ***A 61P 27/16*** ***A 61K 47/34*** ***A 61K 9/14***	EP 2299979*	CONTROLLED RELEASE ANTIMICROBIAL COMPOSITIONS AND METHODS FOR THE TREATMENT OF OTIC DISORDERS
Otonomy,US;	***A 61K 9/06*** ***A 61P 27/16*** ***A 61K 9/14*** ***A 61K 9/16*** ***A 61K 31/573*** ***A 61K 47/34***	EP 2303227*	CONTROLLED RELEASE CORTICOSTEROID COMPOSITIONS AND METHODS FOR THE TREATMENT OF OTIC DISORDERS

(71)	(51)	Broj objave evropske prijave patenta	(54)
Otonomy,US;	***A 61K 9/06*** ***A 61P 27/16*** ***A 61K 31/045*** ***A 61K 9/16*** ***A 61K 47/34***	EP 2306975*	CONTROLLED-RELEASE OTIC STRUCTURE MODULATING AND INNATE IMMUNE SYSTEM MODULATING COMPOSITIONS AND METHODS FOR THE TREATMENT OF OTIC DISORDERS
Otsuka America Pharmaceutical, US	***C 07C 279/24*** ***B 01J 19/18***	EP 2300419*	METHOD AND APPARATUS FOR PREPARING A SOLUTION OF A SHEAR SENSITIVE MATERIAL
Oxford Biotherapeutics Ltd., GB	***G 01N 33/574***	EP 2297580*	PROTEIN
Oystershell NV, BE	***A 01N 27/00*** ***A 01N 25/16*** ***A 01N 25/22*** ***A 01N 55/10*** ***A 01P 7/02*** ***A 01P 7/04***	EP 2114144*	FOAMABLE COMPOSITION FOR KILLING ARTHROPODS AND USES THEREOF
Öztek Tekstil Terbiye Tesisleri Sanayi,TR;	***A 45F 3/04*** ***A 45F 3/08***	EP 2303060*	MILITARY PERSONNEL EXIGENCIES AND AMMUNITION CARRIER SYSTEM
Packers Plus Energy Services Inc., CA	***E 21B 34/14*** ***E 21B 33/126*** ***E 21B 34/10***	EP 2294279*	DOWNHOLE SUB WITH HYDRAULICALLY ACTUABLE SLEEVE VALVE
Packers Plus Energy Services Inc., CA	***E 21B 33/14*** ***E 21B 17/00*** ***E 21B 33/124*** ***E 21B 34/14***	EP 2297427*	CEMENTING SUB FOR ANNULUS CEMENTING
Packers Plus Energy Services Inc., CA	***E 21B 33/124*** ***E 21B 43/25***	EP 2310623*	WELLBORE FLUID TREATMENT PROCESS AND INSTALLATION
Pannon Egyetem,HU;	***C 10G 3/00*** ***C 10L 1/02***	EP 2305778	Fuel and fuel additives capable for use for internal combustion engines and process for the production thereof
Papeterie Zuber Rieder, FR	***D 21H 19/06***	EP 2122052*	PAPER FOR AN OPAQUE LABEL IN A DRY AND WET ENVIRONMENT AND THUS OBTAINED LABEL
Pappas, GR	***G 09G 3/32***	EP 2237253	Pixel circuit, display using the same and driving method for the same
Parrella, US	***F 24J 3/08*** ***F 28D 21/00*** ***F 25B 30/06***	EP 2313708*	SYSTEM AND METHOD OF CAPTURING GEOTHERMAL HEAT FROM WITHIN A DRILLED WELL TO GENERATE ELECTRICITY
Patentes Talgo, ES	***B 61F 5/22*** ***B 61D 3/10***	EP 2301821	DEVICES FOR MOVING THE BUFFERS OF ARTICULATED CARS OF RAILWAY VEHICLES TRAVELLING ON A CURVE
Pavone, IT	***C 07K 4/12*** ***A 61K 38/03***	EP 2230245	Peptides having pharmacological activity for treating disorders associated with altered cell migration, such as cancer
Peng, CN	***B 01D 53/78*** ***B 01D 53/50***	EP 2295130	A METHOD AND DEVICE FOR DESULFURIZATION OF THE SMOKE DISCHARGED FROM SHIP
Pennisi, IT	***F 41A 29/00***	EP 2300771*	APPARATUS AND METHOD FOR CLEANING GUN BARRELS
Perfetti Van Melle S.p.A., IT	***A 23L 1/00*** ***A 23G 4/20*** ***A 61K 9/28***	EP 2296490*	PROCESS FOR MANUFACTURING CHEWING GUM HAVING A COATING LAYER, AND THE CHEWING GUM OBTAINABLE BY SAID PROCESS

(71)	(51)	Broj objave evropske prijave patenta	(54)
Petra Solar Inc., US	***H 01L 25/00***	EP 2319079*	SYSTEM AND METHOD FOR UTILITY POLE DISTRIBUTED SOLAR POWER GENERATION
Pfizer Inc., US	***C 07D 513/10*** ***A 61K 31/4436*** ***A 61P 25/28***	EP 2300484*	NOVEL CLASS OF SPIRO PIPERIDINES FOR THE TREATMENT OF NEURODEGENERATIVE DISEASES
Pfizer Inc., US	***A 61K 9/48***	EP 2320876*	HYDROXYPROPYL CELLULOSE CAPSULE SHELL
Pfizer Limited, GB	***C 07D 249/08*** ***C 07D 401/12*** ***C 07D 401/04*** ***C 07D 401/06*** ***C 07D 401/14*** ***A 61K 31/4196*** ***A 61K 31/4709*** ***A 61K 31/454*** ***A 61P 11/00*** ***A 61P 29/00***	EP 2300443*	TRIAZOLE DERIVATIVES USEFUL FOR THE TREATMENT OF DISEASES
Pharma Mar S.A., ES	***A 61K 31/4995*** ***A 61K 45/06*** ***A 61P 35/00***	EP 2303274*	MULTIPLE MYELOMA TREATMENTS
Pharma Mar S.A., ES	***A 61K 31/282*** ***A 61K 31/337*** ***A 61K 31/436*** ***A 61K 31/4745*** ***A 61K 31/4995*** ***A 61K 31/505*** ***A 61K 31/517*** ***A 61K 31/704*** ***A 61P 35/00***	EP 2307003*	COMBINATION THERAPY WITH PM00104 AND ANOTHER ANTITUMOR AGENT
Pharma Mar S.A., ES	***C 07K 7/06*** ***A 61K 38/08***	EP 2318428*	ANTICANCER COMPOUNDS
Pharma Mar S.A., ES	***C 07D 498/18*** ***C 07D 498/22*** ***A 61K 31/395*** ***A 61P 35/00***	EP 2321325*	ANTITUMORAL MACROLIDES
Pharma Marine AS,NO;	***A 61K 31/20*** ***A 61K 31/202*** ***A 61P 27/00***	EP 2313092*	POLYUNSATURATED FATTY ACIDS FOR IMPROVING VISION
Pharmacopeia, US	***C 07D 473/00*** ***C 07D 473/32*** ***A 61K 31/52*** ***A 61P 3/00*** ***A 61P 9/00***	EP 2112151	Haloaryl substituted aminopurines, compositions thereof, and methods of treatment therewith
Pharmacopeia, US	***C 07D 473/00*** ***C 07D 473/32*** ***A 61K 31/52*** ***A 61P 3/00*** ***A 61P 9/00***	EP 2289893	Haloaryl substituted aminopurines, compositions thereof, and methods of treatment therewith
Pharmaleads, FR	***C 07C 323/60*** ***C 07C 323/65***	EP 2297095*	NOVEL AMINO ACID DERIVATIVES, METHOD FOR PREPARING SAME, AND THERAPEUTIC USE THEREOF

(71)	(51)	Broj objave evropske prijave patenta	(54)
Pharmathen S.A., GR	***A 61K 9/16*** ***A 61K 47/12*** ***A 61K 9/20*** ***A 61K 9/28*** ***A 61K 9/26*** ***A 61K 9/48*** ***A 61K 31/4365***	EP 2303233*	SOLID ORAL DOSAGE FORM CONTAINING ANTI-PLATELET AGENT CLOPIDOGREL AND METHOD FOR THE PREPARATION THEREOF
Philip Morris Products S.A., CH	***A 24D 1/04*** ***A 24D 3/04*** ***A 24C 5/56*** ***A 24D 1/02*** ***A 24D 3/06***	EP 2317881*	SMOKING ARTICLE WITH TRANSPARENT SECTION
Photowatt International S.A., FR	***H 01L 31/042***	EP 2278627	Automatic localisation of photovoltaic modules in a photovoltaic field
Pierce,US;	***A 61B 17/70***	EP 2077782*	ANCHOR ASSEMBLY FOR SPINAL IMPLANT SYSTEM
Pierre Fabre Dermo-Cosmétique, FR	***A 61K 31/01*** ***A 61K 31/047*** ***A 61P 17/02*** ***A 61P 17/06***	EP 2296639*	EMOLLIENT COMPOSITION FOR THE PREVENTIVE TREATMENT OF ATOPIC DERMATITIS
Pierre Fabre Dermo-Cosmétique, FR	***A 61F 13/10***	EP 2313039*	KIT FOR THE TREATMENT OF ONYCHOMYCOSIS
Pierre Fabre Medicament, FR	***A 61K 39/395*** ***A 61P 35/00*** ***A 61K 31/435***	EP 2315601*	COMBINATION OF A C-MET ANTAGONIST AND AN AMINOHETEROARYL COMPOUND FOR THE TREATMENT OF CANCER
Pietro Fiorentini S.p.A., IT	***F 16K 31/06*** ***F 16K 31/56*** ***F 16K 17/38*** ***A 62C 35/68***	EP 2048418	Safety electrovalve
Pilkington North America, US	***B 60J 1/18***	EP 2301782	Vehicle window assembly with horizontal slider
Pioneer Corporation,JP;	***H 04R 1/10***	EP 2299730	EARPHONE
Pioneer Corporation,JP;	***H 04R 9/02*** ***H 04R 9/00*** ***H 04R 9/04***	EP 2302949	SPEAKER DEVICE
Pipeline Technique Limited, GB	***F 16L 58/04***	EP 2307783*	PIPE COATING
Pittsburgh Corning Europe Nv, BE	***C 03B 19/08***	EP 2297054*	CELLULAR CERAMIC PLATES WITH ASYMMETRICAL CELL STRUCTURE AND MANUFACTURING METHOD THEREOF
PLC Diagnostics, US	***C 12Q 1/68***	EP 2297356*	SYSTEM AND METHOD FOR NUCLEIC ACIDS SEQUENCING BY PHASED SYNTHESIS
Polichem SA, LU	***A 61K 31/194*** ***A 61K 31/20*** ***A 61K 31/23*** ***A 61K 31/722*** ***A 61K 45/06*** ***A 61P 7/00*** ***A 61K 47/12*** ***A 61K 47/36*** ***A 61K 9/00***	EP 2306999*	COMPOSITIONS FOR TREATING ROSACEA

(71)	(51)	Broj objave evropske prijave patenta	(54)
Polichem SA, LU	***A 61K 31/722*** ***A 61K 47/36*** ***A 61K 31/506*** ***A 61K 31/56*** ***A 61K 31/585***	EP 2307031*	FILM-FORMING LIQUID FORMULATIONS FOR DRUG RELEASE TO HAIR AND SCALP
Pomona Ricerca S.R.L., IT	***C 07K 16/10*** ***A 61P 31/16*** ***G 01N 33/569*** ***G 01N 33/577***	EP 2294084*	MONOCLONAL ANTIBODIES HAVING HOMOSUBTYPE CROSS - NEUTRALIZATION PROPERTIES AGAINST INFLUENZA A VIRUSES SUBTYPE H1
Power Plate International Ltd., GB	***A 63B 22/08*** ***A 61H 23/00***	EP 2300106*	TRAINING SYSTEM COMPRISING A CYCLING DEVICE
POXEL SAS, FR	***C 07D 251/10***	EP 2300444*	PROCESS FOR THE SYNTHESIS OF 3,6-DIHYDRO-1,3,5-TRIAZINE DERIVATIVES
President and Fellows of Harvard College, US	***C 07F 7/22***	EP 2303897*	HIGH-VALENT PALLADIUM FLUORIDE COMPLEXES AND USES THEREOF
Procontrol S.R.L., IT	***G 01N 29/07*** ***G 01N 29/265*** ***G 01N 29/28***	EP 2300814*	SELF-PROPELLING DEVICE FOR POSITIONING OF PROBES FOR NON-DESTRUCTIVE TESTING
Pronova BioPharma Norge AS, NO	***A 61K 31/10*** ***A 23L 1/29*** ***A 61K 31/22*** ***C 07C 317/04*** ***C 07C 317/06*** ***C 07C 317/12*** ***C 07C 321/14*** ***C 07C 321/18*** ***C 07C 321/22*** ***A 61P 3/04*** ***A 61P 9/10***	EP 2313090*	NOVEL SULPHUR CONTAINING LIPIDS FOR USE AS FOOD SUPPLEMENT OR AS MEDICAMENT
Prosonix Limited, GB	***B 01D 9/00*** ***C 30B 7/00*** ***A 61K 9/16*** ***B 01D 1/18*** ***F 26B 5/06*** ***F 26B 3/12***	EP 2321022*	PROCESS FOR IMPROVING CRYSTALLINITY
Prosonix Limited, GB	***B 01D 9/00*** ***C 30B 7/00*** ***A 61K 9/16*** ***B 01D 1/18*** ***F 26B 5/06*** ***F 26B 3/12***	EP 2321023*	PROCESS FOR IMPROVING CRYSTALLINITY OF FLUTICASONE PARTICLES
Protaffin Biotechnologie AG, AT	***A 61K 38/20*** ***C 12N 15/00*** ***A 61P 37/06***	EP 2063908*	USE OF MODIFIED INTERLEUKIN-8 PROTEINS FOR TREATING REPERFUSION INJURY OR TRANSPLANT REJECTION
Proyecto de Biomedicina Cima, ES	***C 12N 15/861*** ***C 12N 15/85***	EP 2295591	SELF-INACTIVATING HELPER ADENOVIRUSES FOR THE PRODUCTION OF HIGH-CAPACITY RECOMBINANT ADENOVIRUSES
Proyecto de Biomedicina Cima, ES	***C 12N 15/861***	EP 2298925	SYSTEM FOR PACKAGING HIGH-CAPACITY ADENOVIRUSES
Proyecto de Biomedicina Cima, ES	***A 61K 47/48***	EP 2305309	CONJUGATES FOR THE ADMINISTRATION OF BIOLOGICALLY ACTIVE COMPOUNDS

(71)	(51)	Broj objave evropske prijave patenta	(54)
Proyecto de Biomedicina Cima,ES;	***C 12N 15/62*** ***C 12N 15/861*** ***A 61K 48/00*** ***A 61K 39/00***	EP 2304034*	AN ADAPTER MOLECULE FOR THE DELIVERY OF ADENOVIRUS VECTORS
Pt Hanjaya Mandala Sampoerna Tbk., ID	***A 24D 3/04*** ***A 24D 3/14***	EP 2299854*	FILTER FOR A SMOKING ARTICLE
Pulmagen Therapeutics (Synergy) Limited, GB	***C 07D 453/02*** ***A 61K 31/439*** ***A 61P 11/00***	EP 2300464*	QUINUCLIDINE DERIVATIVES AS MUSCARINIC M3 RECEPTOR ANTAGONISTS
Pulmatrix, US	***A 61K 9/00*** ***A 61K 47/02*** ***A 61K 47/12***	EP 2315580*	PHARMACEUTICAL FORMULATIONS AND METHODS FOR TREATING RESPIRATORY TRACT INFECTIONS
Purdue Pharma L.P., US	***A 61K 31/485*** ***A 61K 9/22*** ***A 61K 9/32***	EP 2311459	Tamper resistant oral pharmaceutical dosage forms comprising an opioid analgesic
Purdue Pharma LP, US	***C 07D 413/04*** ***C 07D 413/14*** ***A 61K 31/454*** ***A 61P 25/00***	EP 2298764	4-Oxadiazolyl-piperidine compounds and use thereof
Purdue Pharma LP, US	***C 07D 413/04*** ***C 07D 413/14*** ***A 61K 31/454*** ***A 61P 25/00***	EP 2298765	4-Oxadiazolyl-piperidine compounds and use thereof
PURE TECHNOLOGIES LTD, CA	***G 01N 29/04*** ***F 16L 55/26*** ***F 16L 55/48*** ***G 01N 29/07*** ***G 01N 29/34***	EP 2313766*	DEVICE AND METHOD TO ASSESS IMPAIRMENT OF PIPELINE WALL STRENGTH
QLT Plug Delivery, US	***B 29C 37/02*** ***B 29C 71/00*** ***A 61F 9/00*** ***A 61F 9/007*** ***B 24B 9/20*** ***B 24B 31/00***	EP 2293912*	SURFACE TREATED IMPLANTABLE ARTICLES AND RELATED METHODS
QLT Plug Delivery, US	***A 61F 2/00*** ***A 61F 13/00***	EP 2303184*	COMBINATION TREATMENT OF GLAUCOMA
Radowski, PL	***F 16J 15/08*** ***F 16J 15/28*** ***F 16J 15/32***	EP 2300740*	SEALING ARRANGEMENT FOR CYLINDRICAL SURFACES AND A SEAL TO BE USED IN SUCH SEALING ARRANGEMENTS
Rafifarm S.R.L., RO	***A 61K 31/381*** ***A 61P 39/02***	EP 2320890*	INDICATION OF USE OF ERDOSTEINE AS ANTIDOTE IN A LARGE NUMBER OF INTOXICATIONS, ESPECIALLY IN HEAVY METALS LIKE LEAD OR MERCURY, AND PARACETAMOL
Recordati Ireland Limited, IE	***C 07D 211/90*** ***A 61K 31/4422*** ***A 61P 9/00***	EP 2303842*	A PROCESS FOR PRODUCING LERCANIDIPINE HC1 FORM V
Recticel Holding Noord B.V., NL	***A 01G 31/00*** ***A 01G 9/10***	EP 2299802*	METHOD FOR MANUFACTURING A PLANT SUBSTRATE AND PLANT SUBSTRATE

(71)	(51)	Broj objave evropske prijave patenta	(54)
Redcord AS, NO	***A 63B 21/068*** ***A 61H 1/00***	EP 2101883*	VIBRATION APPARATUS FOR USE ON THERAPY AND EXERCISE EQUIPMENT, AND A METHOD FOR PROVIDING CONTROLLABLE VIBRATION TO SUCH EQUIPMENT
Region Midtjylland, DK	***C 12Q 1/68***	EP 2305837	Method for diagnosis and treatment of a mental disease
Renevu Ltd., SC	***B 29C 39/10*** ***H 01L 33/00***	EP 2310175*	A METHOD FOR MANUFACTURING A LENS TO BE ADDED TO A LED, AND A LENS OBTAINED WITH THAT METHOD
Rensselaer Polytechnic Institute, US	***C 07D 221/26*** ***A 61K 31/485*** ***A 61P 25/36*** ***A 61P 29/00***	EP 2318372*	LARGE SUBSTITUENT, NON-PHENOLIC AMINE OPIOIDS
Research Center Pharmaceutical Engineering GmbH, AT	***A 61J 3/00***	EP 2313050*	A SYSTEM AND METHOD FOR MANUFACTURING A MEDICATION
RESEARCH IN MOTION LIMITED, CA	***H 04Q 7/38***	EP 1968339	Apparatus and associated method for facilitating I-WLAN selection
RESEARCH IN MOTION LIMITED, CA	***G 06F 3/01*** ***G 06F 3/041*** ***H 04M 1/725***	EP 2306271	Electronic device including tactile touch-sensitive display and method of controlling same
RESEARCH IN MOTION LIMITED, CA	***G 06F 3/02*** ***G 06F 3/048*** ***G 06F 3/033*** ***G 06F 3/023***	EP 2306273	Apparatus and method for invoking a function based on a gesture input
RESEARCH IN MOTION LIMITED, CA	***H 01L 41/047*** ***G 06F 3/01***	EP 2306538	Piezoelectric assembly
Resilux, BE	***B 29C 49/00*** ***B 29C 49/22*** ***B 29C 45/16*** ***B 65D 1/02***	EP 2318194*	PLASTIC PREFORM AND PROCESS FOR THE MANUFACTURING THEREOF TO A CONTAINER AND THE CONTAINER AND THE USE THEREOF
Retractable Technologies,US;	***A 61L 2/00*** ***A 61L 9/00***	EP 2300058*	CLEANING TOOL
Rheinische Friedrich-Wilhelms-Universität Bonn, DE	***C 07D 473/34*** ***A 61K 31/52*** ***A 61P 25/00*** ***A 61P 29/00***	EP 2303884*	ADENINE RECEPTOR LIGANDS
Richter Gedeon Nyrt., HU	***A 01N 43/62*** ***A 61K 31/55***	EP 2317852*	PHARMACEUTICAL FORMULATIONS CONTAINING DOPAMINE RECEPTOR LIGANDS
Rigshospitalet, DK	***A 61K 9/00*** ***A 61K 47/12*** ***A 61F 13/00*** ***A 61L 2/00*** ***A 61K 9/08***	EP 2306972*	ACETIC ACID AND A BUFFER
Robert Bosch GmbH, DE	***F 16H 61/02*** ***B 60W 10/10*** ***F 16H 47/02*** ***F 16H 59/44*** ***F 16H 59/48*** ***F 16H 59/46***	EP 2213910	Method and device for changing the gears of a hydrostatically driven multiple gear gearbox
Robert Bosch GmbH, DE	***B 65B 35/50*** ***B 65G 57/03*** ***B 65B 61/24***	EP 2230181	Machine and method for grouping containers

(71)	(51)	Broj objave evropske prijave patenta	(54)
Rolf, DE	***E 06B 7/215***	EP 2261453	Window or door
ROTO FRANK AG, DE	***E 05D 7/00*** ***E 05D 15/30*** ***E 05D 15/52***	EP 2304146*	HINGED OPENING DEVICE FOR A WINDOW, A DOOR, OR THE LIKE
Ruepp, CH	***A 61H 3/00*** ***A 61H 3/04***	EP 2233120	Walking aid
S.A.I.T.A. S.R.L., IT	***C 02F 9/08*** ***C 02F 1/42*** ***C 02F 103/04*** ***B 01J 47/04*** ***C 02F 9/04*** ***C 02F 103/12*** ***C 02F 103/34*** ***C 02F 1/28*** ***C 02F 1/04*** ***C 02F 1/52*** ***C 02F 9/00***	EP 2297050*	APPARATUS FOR TREATING WASTEWATER, PARTICULARLY WASTEWATER ORIGINATING FROM A PROCESS FOR THE PRODUCTION OF PHOTOVOLTAIC CELLS
SABAF S.p.A., IT	***F 23D 14/10*** ***F 23Q 9/04***	EP 2304317*	GAS BURNER FOR OVENS OR GRILLS
SABAF S.p.A., IT	***F 23D 14/10*** ***F 23D 14/70***	EP 2307800*	GAS BURNER FOR OVENS
Saint-Gobain Abrasifs Technologie et Services S.A., FR	***C 08L 61/00*** ***C 08L 97/02*** ***C 08L 91/00*** ***B 24D 3/28*** ***C 08L 61/06*** ***C 08L 101/06***	EP 2291453*	FORMALDEHYDE-FREE ABRASIVE ARTICLE
Saint-Gobain Abrasives,US;	***C 08L 61/00*** ***C 08L 97/02*** ***C 08L 91/00*** ***B 24D 3/28*** ***C 08L 61/06*** ***C 08L 101/06***	EP 2291453*	FORMALDEHYDE-FREE ABRASIVE ARTICLE
Saint-Gobain Glass France, FR	***H 01R 13/11*** ***H 01R 11/28***	EP 2308137*	FEMALE, MALE ELECTRIC CONNECTOR AND ELECTRIC CONNECTION USING SUCH A FEMALE AND/OR MALE ELECTRIC CONNECTOR
Salesforce.Com, US	***G 06F 17/00*** ***G 06F 17/30***	EP 2315127	Custom entities and fields in a multi-tenant database system
Salix Pharmaceuticals, US	***C 01G 3/00***	EP 2294012*	METHODS OF TREATING BOWEL DISEASE BY ADMINISTERING A BOWEL CLEANSER AND AN ANTIBIOTIC
Sandoz AG, CH	***C 07D 405/14*** ***A 61K 31/496*** ***A 61P 31/10***	EP 2318396*	A CRYSTALLINE FORM OF POSACONAZOLE
Sanofi-Aventis, FR	***C 07D 213/60*** ***C 07D 241/10*** ***C 07D 401/04*** ***A 61K 31/435*** ***A 61P 9/00***	EP 2059508*	5,6-BISARYL-2-PYRIDINE-CARBOXAMIDE DERIVATIVES, PREPARATION AND APPLICATION THEREOF IN THERAPEUTICS AS UROTENSIN II RECEPTOR ANTAGONISTS

(71)	(51)	Broj objave evropske prijave patenta	(54)
Sanofi-Aventis, FR	***C 07D 401/12*** ***C 07D 401/14*** ***C 07D 409/14*** ***A 61K 31/4725*** ***A 61P 9/00***	EP 2114920*	SUBSTITUTED ISOQUINOLINE AND ISOQUINOLINONE DERIVATIVES
Sanofi-Aventis, FR	***C 07J 41/00***	EP 2121724*	NOVEL METHOD FOR THE DIASTEREOSELECTIVE PRODUCTION OF A CHIRAL PRIMARY AMINE ON A STEROID
Sanofi-Aventis, FR	***C 07D 413/14*** ***C 07D 265/30*** ***C 07D 265/32***	EP 2221304	Method for synthesizing intermediate compound for synthesizing a pharmaceutical agent
Sanofi-Aventis, FR	***C 07D 413/14*** ***C 07D 239/26***	EP 2221305	Method for synthesizing intermediate compound for synthesizing a pharmaceutical agent
sanofi-aventis, FR	***C 12Q 1/68***	EP 2233584	Use of CLEC1B for the determination of cardiovascular and thrombotic risk
Sanofi-Aventis, FR	***C 07D 209/34*** ***C 07D 401/06*** ***C 07D 403/06*** ***A 61K 31/404***	EP 2265582*	NOVEL 3-AMINOALKYL-1,3-DIHYDRO-2H-INDOL-2-ONE DERIVATIVES, PREPARATION THEREOF AND THERAPEUTIC USE THEREOF.
Sanofi-Aventis, FR	***A 61K 31/343*** ***A 61P 9/04***	EP 2280702*	USE OF DRONEDARONE OR A PHARMACEUTICALLY ACCEPTABLE SALT THEREOF, FOR THE PREPARATION OF A MEDICAMENT FOR REGULATING THE POTASSIUM LEVEL IN THE BLOOD
Sanofi-Aventis, FR	***A 61K 31/27*** ***A 61K 31/445*** ***A 61K 31/551*** ***A 61K 45/06*** ***A 61P 25/28***	EP 2293790*	COMBINATION OF A NICOTINIC RECEPTOR PARTIAL AGONIST AND OF AN ACETYLCHOLINESTERASE INHIBITOR, PHARMACEUTICAL COMPOSITION CONTAINING SAME AND USE THEREOF IN THE TREATMENT OF COGNITIVE DISORDERS
Sanofi-Aventis, FR	***C 07D 471/04*** ***A 61K 31/437***	EP 2294068*	1,3-DIHYDRO-2H-PYRROLO[3,2-B]PYRIDIN-2-ONE DERIVATIVES, PREPARATION THEREOF AND THERAPEUTIC USES THEREOF
Sanofi-Aventis, FR	***A 61K 31/343*** ***A 61P 9/06***	EP 2300001*	DRONEDARONE FOR THE PREVENTION OF PERMANENT ATRIAL FIBRILLATION
Sanofi-Aventis, FR	***C 07D 413/14*** ***C 07D 273/01*** ***A 61K 31/553*** ***A 61P 7/00***	EP 2300462*	MACROCYCLIC UREA AND SULFAMIDE DERIVATIVES AS INHIBITORS OF TAFIA
Sanofi-Aventis, FR	***C 07D 471/08*** ***A 61K 31/551*** ***A 61P 25/00*** ***C 07D 243/08*** ***C 07D 211/58*** ***A 61P 25/28*** ***A 61P 25/18***	EP 2300473*	FUMARATE SALT OF 4-BROMOPHENYL 1,4-DIAZABICYCLO[3.2.2]NONANE-4-CARBOXYLATE, CRYSTALLINE FORMS THEREOF, PREPARATION THEREOF AND THERAPEUTIC USE THEREOF
Sanofi-Aventis, FR	***A 61K 31/343*** ***A 61P 9/06***	EP 2303259*	DRONEDARONE FOR THE PREVENTION OF CARDIOVERSION

(71)	(51)	Broj objave evropske prijave patenta	(54)
Sanofi-Aventis, FR	***A 61K 31/4402*** ***A 61K 31/38*** ***A 61K 31/16*** ***A 61P 9/00*** ***A 61P 29/00*** ***C 07D 333/80*** ***C 07D 333/32*** ***C 07C 323/19*** ***C 07C 235/54*** ***C 07C 235/84*** ***C 07C 323/62*** ***C 07D 213/64*** ***C 07D 277/56***	EP 2303270*	ACYLAMINO-SUBSTITUTED FUSED CYCLOPENTANECARBOXYLIC ACID DERIVATIVES AND THEIR USE AS PHARMACEUTICALS
Sanofi-Aventis, FR	***C 07D 217/24*** ***C 07D 493/08*** ***C 07D 495/08*** ***A 61K 31/472*** ***A 61P 27/00*** ***A 61P 9/00*** ***A 61P 25/00*** ***A 61P 37/00***	EP 2303845*	BI-AND POLYCYCLIC SUBSTITUTED ISOQUINOLINE AND ISOQUINOLINE DERIVATIVES AS RHO KINASE INHIBITORS
Sanofi-Aventis, FR	***C 07D 217/24*** ***A 61K 31/472*** ***A 61P 9/00*** ***A 61P 27/00*** ***A 61P 25/00*** ***A 61P 37/00***	EP 2303846*	SUBSTITUTED ISOQUINOLINES AND ISOQUINOLINONES AS RHO KINASE INHIBITORS
Sanofi-Aventis, FR	***C 07D 471/14*** ***A 61K 31/437*** ***A 61P 35/00*** ***C 07D 471/04*** ***C 07D 213/04*** ***C 07D 207/32***	EP 2303882*	AZACARBOLINE DERIVATIVES, PREPARATION METHOD THEREOF AND THERAPEUTIC USE OF SAME
Sanofi-Aventis, FR	***C 07D 401/12*** ***C 07D 401/14*** ***C 07D 407/14*** ***C 07D 471/04*** ***A 61K 31/519*** ***A 61K 31/4709*** ***A 61K 31/4375*** ***A 61P 35/00*** ***C 07D 215/56*** ***C 07D 213/82*** ***C 07D 213/40***	EP 2307401*	ANTINEOPLASTIC DERIVATIVES OF 4-OXO-1,4-DIHYDRO-QUINOLINE, PREPARATION THEREOF, AND THERAPEUTIC USE THEREOF
Sanofi-Aventis, FR	***C 07D 487/04*** ***A 61K 31/519*** ***A 61P 25/00*** ***A 61P 35/00*** ***C 07D 519/00***	EP 2307416*	SUBSTITUTED TRICYCLIC DERIVATIVES AGAINST NEURODEGENERATIVE DISEASES

(71)	(51)	Broj objave evropske prijave patenta	(54)
Sanofi-Aventis, FR	***C 07D 213/02*** ***C 07D 249/12*** ***C 07D 471/04*** ***A 61K 31/437*** ***A 61P 37/08*** ***A 61P 35/00*** ***A 61P 25/00*** ***A 61P 21/00*** ***A 61P 27/00*** ***A 61P 19/02*** ***A 61P 11/06*** ***A 61P 7/02*** ***A 61P 3/00*** ***A 61K 31/5377*** ***C 07D 277/82*** ***C 07D 213/61*** ***C 07D 213/26*** ***A 61K 31/496*** ***A 61K 31/428*** ***A 61P 17/06***	EP 2310366*	NOVEL TRIAZOLO(4,3-A)PYRIDINE DERIVATIVES, PROCESS FOR THE PREPARATION THEREOF, USE THEREOF AS MEDICAMENTS, PHARMACEUTICAL COMPOSITIONS AND NOVEL USE, IN PARTICULAR AS MET INHIBITORS
Sanofi-Aventis, FR	***C 07D 217/24*** ***C 07D 217/02*** ***C 07D 217/22*** ***C 07D 405/12*** ***C 07D 409/12*** ***C 07D 417/12*** ***A 61K 31/472*** ***A 61K 31/4725*** ***A 61P 9/12*** ***A 61P 43/00***	EP 2313374*	6-SUBSTITUTED ISOQUINOLINES AND ISOQUINOLINONES
Sanofi-Aventis, FR	***C 07D 237/28*** ***C 07D 405/04*** ***C 07D 409/04*** ***A 61K 31/502*** ***A 61P 25/00*** ***A 61P 35/00*** ***C 07D 237/36***	EP 2313376*	SUBSTITUTED 1-BENZYL-CINNOLIN-4(1H)-ONE DERIVATIVES, PREPARATION THEREOF, AND THERAPEUTIC USE THEREOF
Sanofi-Aventis, FR	***C 07D 401/12*** ***C 07D 403/12*** ***C 07D 409/12*** ***A 61K 31/40*** ***A 61P 1/00*** ***A 61P 11/00*** ***A 61P 25/00***	EP 2313392*	AZETIDINE POLYSUBSTITUTED COMPOUNDS, PREPARATION THEREOF, AND THERAPEUTIC APPLICATION THEREOF
Sanofi-Aventis, FR	***C 07D 401/12*** ***C 07D 403/12*** ***C 07D 413/12*** ***C 07D 417/12*** ***A 61K 31/40*** ***A 61P 1/00*** ***A 61P 11/00*** ***A 61P 25/00***	EP 2313393*	AZETIDINE POLYSUBSTITUTED COMPOUNDS, PREPARATION THEREOF, AND THERAPEUTIC APPLICATION THEREOF

(71)	(51)	Broj objave evropske prijave patenta	(54)
Sanofi-Aventis, FR	***C 07D 487/04*** ***C 07D 471/04*** ***C 07D 207/323*** ***C 07D 209/40*** ***C 07D 233/64*** ***A 61K 31/437***	EP 2313412*	NOVEL DERIVATIVES OF PYRROLOINDOLE INHIBITORS OF HSP90, COMPOSITIONS CONTAINING SAME, AND USE THEREOF
Sanofi-Aventis, FR	***A 61K 31/7056*** ***A 61P 7/02***	EP 2315593*	USE OF IDRABIOTAPARINUX FOR DECREASING THE INCIDENCE OF BLEEDINGS DURING AN ANTITHROMBOTIC TREATMENT
Sanofi-Aventis, FR	***C 07D 277/82*** ***C 07D 471/04*** ***A 61K 31/437*** ***A 61P 35/00***	EP 2318382*	NOVEL IMIDAZO[1,2-A]PYRIDINE DERIVATIVES, METHOD FOR THE PREPARATION THEREOF, USE THEREOF AS MEDICAMENTS, PHARMACEUTICAL COMPOSITIONS AND NOVEL USE IN PARTICULAR AS MET INHIBITORS
Sanofi-Aventis, FR	***C 07D 498/04*** ***C 07D 519/00*** ***A 61K 31/519*** ***A 61P 3/10*** ***A 61P 7/02*** ***A 61P 9/04*** ***A 61P 9/10*** ***A 61P 9/12*** ***A 61P 9/14*** ***A 61P 11/00*** ***A 61P 13/12*** ***A 61P 25/28*** ***A 61P 29/00*** ***A 61P 31/02*** ***A 61P 35/00***	EP 2318415*	OXAZOLOPYRIMIDINES AS EDG-1 RECEPTOR AGONISTS
Sanofi-Aventis, FR	***C 07D 241/52*** ***C 07D 401/04*** ***A 61K 31/497*** ***A 61P 25/28***	EP 2321286*	SUBSTITUTED N-OXIDE PYRAZINE DERIVATIVES
Sanofi-Aventis, FR	***C 07D 401/04*** ***C 07D 487/04*** ***A 61K 31/53*** ***A 61P 25/28*** ***A 61P 3/10*** ***A 61P 35/00*** ***A 61P 33/06***	EP 2321295*	4-(PYRIDIN-4-YL)-1H-[1,3,5]TRIAZIN-2-ONE DERIVATIVES AS GSK3-BETA INHIBITORS FOR THE TREATMENT OF NEURODEGENERATIVE DISEASES
Sanofi-Aventis, FR	***C 07D 471/04*** ***A 61K 31/519*** ***A 61P 31/10*** ***A 61P 17/14*** ***A 61P 25/00***	EP 2321313*	SUBSTITUTED PYRIMIDO [2, 1-A]ISOQUINOLIN-4-ONE DERIVATIVES
Sanofi-Aventis, FR	***C 07D 471/04*** ***A 61K 31/519*** ***A 61P 25/00***	EP 2321314*	SUBSTITUTED PYRIMIDONE DERIVATIVES
Sanofi-Aventis, FR	***C 07D 471/04*** ***A 61K 31/519*** ***A 61P 25/00***	EP 2321315*	SUBSTITUTED ALKYL PYRIMIDIN-4-ONE DERIVATIVES

(71)	(51)	Broj objave evropske prijave patenta	(54)
Sanofi-Aventis, FR	***C 07D 471/04*** ***A 61K 31/519*** ***A 61P 25/00***	EP 2321316*	SUBSTITUTED PYRIMIDIN-4-ONE DERIVATIVES
Sanosil AG, CH	***A 01N 59/16*** ***A 01N 59/00*** ***A 01N 25/22*** ***A 01N 25/02*** ***A 01P 1/00***	EP 2309863*	CONCENTRATE FOR PREPARING A DISINFECTANT AND METHODS FOR ITS PREPARATION AND USE
Santaris Pharma A/S, DK	***A 61K 31/7088*** ***C 12N 15/11***	EP 2307029*	RNA ANTAGONISTS TARGETING HSP27
Santaris Pharma A/S, DK	***C 12N 15/11*** ***A 61K 31/7088***	EP 2310506*	RNA ANTAGONISTS TARGETING GLI2
Santen Pharmaceutical Co.,JP;	***A 61K 9/08*** ***A 61K 47/10*** ***A 61K 47/26*** ***A 61K 47/18*** ***A 61K 31/5575***	EP 2306977*	METHOD AND COMPOSITION FOR TREATING OCULAR HYPERTENSION AND GLAUCOMA
Sapphire Energy, US	***C 12N 1/13*** ***C 07K 16/14*** ***C 12N 15/63***	EP 2294179*	INDUCTION OF FLOCCULATION IN PHOTOSYNTHETIC ORGANISMS
Sara Lee/DE N.V., NL	***A 47J 31/36***	EP 2303077*	CAPSULE, SYSTEM AND METHOD FOR PREPARING A PREDETERMINED QUANTITY OF BEVERAGE SUITABLE FOR CONSUMPTION
Sara Lee/DE N.V., NL	***A 47J 31/36*** ***B 65D 85/804***	EP 2306871*	SYSTEM, CAPSULE AND METHOD FOR PREPARING A BEVERAGE
Sara Lee/DE N.V., NL	***B 65D 85/804*** ***A 47J 31/06***	EP 2307288*	SYSTEM, METHOD AND CAPSULE FOR PREPARING A BEVERAGE
Sara Lee/DE N.V., NL	***B 65D 85/804*** ***A 47J 31/06***	EP 2310301*	SYSTEM, METHOD AND CAPSULE FOR PREPARING A BEVERAGE
Schering Corporation, US	***C 07K 16/28*** ***C 07K 14/715***	EP 2057194*	ENGINEERED ANTI-IL-23R ANTIBODIES
Schering Corporation, US	***C 07D 487/04*** ***A 61K 31/519*** ***A 61P 35/00***	EP 2069348*	NOVEL PYRAZOLOPYRIMIDINES AS CYCLIN DEPENDENT KINASE INHIBITORS
Schering Corporation, US	***C 07D 487/04*** ***A 61K 31/519*** ***A 61P 35/00***	EP 2069349*	PYRAZOLOPYRIMIDINES AS CYCLIN DEPENDENT KINASE INHIBITORS
Schering Corporation, US	***C 07D 487/04*** ***A 61K 31/519*** ***A 61P 35/00***	EP 2069350*	NOVEL PYRAZOLOPYRIMIDINES AS CYCLIN DEPENDENT KINASE INHIBITORS
Schwade,US;	***F 28G 15/02***	EP 2310794*	SOOTBLOWER WITH MODULAR CANOPY
Scuderi Group, US	***F 02B 33/30***	EP 2300699*	PART-LOAD CONTROL IN A SPLIT-CYCLE ENGINE
Sea Lane Biotechnologies, US	***C 07K 16/00***	EP 2300498*	CONSTRUCTS AND LIBRARIES COMPRISING ANTIBODY SURROGATE KAPPA LIGHT CHAIN SEQUENCES
SGX Pharmaceuticals, US	***C 07D 487/04*** ***A 61K 31/5025*** ***A 61K 31/53*** ***A 61P 35/00***	EP 2084162*	BICYCLIC TRIAZOLES AS PROTEIN KINASE MODULATORS
Shang, CN	***A 61B 17/326***	EP 2305146	ANASTOMAT FOR CIRCUMCISION

(71)	(51)	Broj objave evropske prijave patenta	(54)
Shaw, US	***A 61L 2/00*** ***A 61L 9/00***	EP 2300058*	CLEANING TOOL
Shionogi & Co., JP	***C 07D 417/12*** ***A 61K 31/4439*** ***A 61K 31/497*** ***A 61K 31/541*** ***A 61P 25/28*** ***A 61P 43/00*** ***C 07D 417/10*** ***C 07D 417/14***	EP 2305672	SULFUR-CONTAINING HETEROCYCLIC DERIVATIVE HAVING ß-SECRETASE-INHIBITING ACTIVITY
Shire LLC, US	***C 07D 239/84*** ***A 61K 31/517*** ***A 61P 7/02***	EP 2297116*	SUBSTITUTED QUINAZOLINES
Shire LLC, US	***C 07D 487/04*** ***A 61K 31/5025*** ***A 61P 7/02***	EP 2297159*	SUBSTITUTED QUINAZOLINES
SICAM S.r.l., IT	***G 01M 1/22***	EP 1898197	Upgraded balancing machine for vehicle wheels
SICAM S.r.l., IT	***G 01M 1/00***	EP 2163873	Balancing machine for balancing vehicle wheels
SICAM S.r.l., IT	***G 01M 1/00***	EP 2163874	Balancing machine for balancing vehicle wheels
SICAM S.r.l., IT	***G 01M 1/02***	EP 2163875	Balancing machine for balancing vehicle wheels
Siena Biotech S.p.A.,IT;	***C 07D 231/40*** ***C 07D 401/04*** ***C 07D 403/04*** ***C 07D 403/12*** ***C 07D 403/14*** ***C 07D 407/04*** ***C 07D 407/14*** ***C 07D 409/04*** ***C 07D 413/12*** ***C 07D 473/04*** ***C 07D 487/04*** ***A 61K 31/4155*** ***A 61P 25/00***	EP 2118067*	NICOTINIC ACETYLCHOLINE RECEPTOR MODULATORS
Signal Pharmaceuticals LLC,US;	***C 07D 473/00*** ***C 07D 473/32*** ***A 61K 31/52*** ***A 61P 3/00*** ***A 61P 9/00***	EP 2112151	Haloaryl substituted aminopurines, compositions thereof, and methods of treatment therewith
Signal Pharmaceuticals LLC,US;	***C 07D 473/00*** ***C 07D 473/32*** ***A 61K 31/52*** ***A 61P 3/00*** ***A 61P 9/00***	EP 2289893	Haloaryl substituted aminopurines, compositions thereof, and methods of treatment therewith
SIGNO-Erfinderverein Sachsen e.V., DE	***F 03B 3/04*** ***F 03B 17/06***	EP 2297451*	FLOW CONVERTER
Silber, HU	***E 04H 12/14*** ***E 04G 23/02***	EP 2294270*	METHODS FOR REINFORCING EXISTING LATTICE FRAME STRUCTURES HAVING HOLLOW STEEL PRIMARY ELEMENTS, PARTICULARLY STEEL TOWERS WITH TUBULAR LEGS

(71)	(51)	Broj objave evropske prijave patenta	(54)
Siliken Chemicals S.L., ES	***C 01B 33/037*** ***B 01J 8/18***	EP 2318313*	FLUIDIZED BED REACTOR FOR PRODUCTION OF HIGH PURITY SILICON
Sirius Technology AS, NO	***A 47K 11/02*** ***F 23D 14/02*** ***F 23D 14/82***	EP 2303083*	AN INCINERATION SYSTEM AND BURNER FOR A TOILET
Sirtris Pharmaceuticals, US	***C 07D 471/04*** ***C 07D 487/04*** ***A 61P 3/00*** ***A 61K 31/437***	EP 2297144*	IMIDAZOPYRIDINE AND RELATED ANALOGS AS SIRTUIN MODULATORS
Sirtris Pharmaceuticals, US	***C 07D 401/12*** ***C 07D 401/14*** ***C 07D 403/12*** ***C 07D 403/14*** ***C 07D 405/12*** ***C 07D 405/14*** ***C 07D 413/12*** ***C 07D 413/14*** ***C 07D 417/12*** ***C 07D 417/14*** ***C 07D 471/04*** ***C 07D 471/08*** ***C 07D 513/04*** ***A 61K 31/4184*** ***A 61K 31/437***	EP 2315763*	BENZIMIDAZOLES AND RELATED ANALOGS AS SIRTUIN MODULATORS
Siskos,GR;	***G 09G 3/32***	EP 2237253	Pixel circuit, display using the same and driving method for the same
Smithkline Beecham Corporation, US	***A 61K 31/522*** ***C 07D 473/16*** ***C 07D 473/18*** ***A 61P 29/00***	EP 2320905*	NOVEL ADENINE DERIVATIVES
SOCIEDADE BENEFICENTE DE SENHORAS HOSPITAL, BR	***A 61B 1/018***	EP 2296529*	SURGICAL ENDOSCOPE
Sol-Gel Technologies Ltd., IL	***B 01J 13/14*** ***A 01N 25/28*** ***A 61K 8/11*** ***A 61K 9/50***	EP 2307129*	MICROCAPSULES COMPRISING ACTIVE INGREDIENTS AND A METAL OXIDE SHELL, A METHOD FOR THEIR PREPARATION AND USES THEREOF
SOLVAY (Société Anonyme), BE	***C 07C 4/04*** ***C 07C 7/04*** ***C 07C 11/04*** ***C 07C 17/02*** ***C 07C 19/045***	EP 2297072*	PROCESS FOR THE MANUFACTURE OF 1,2-DICHLOROETHANE AND OF AT LEAST ONE ETHYLENE DERIVATIVE COMPOUND DIFFERENT FROM 1,2-DICHLOROETHANE
SOLVAY (Société Anonyme), BE	***C 07C 17/02*** ***C 07C 17/156*** ***C 07C 17/25*** ***C 07C 19/045*** ***C 07C 21/06***	EP 2303816*	PROCESS FOR THE MANUFACTURE OF AT LEAST ONE ETHYLENE DERIVATIVE COMPOUND
SOLVAY (Société Anonyme), BE	***C 07C 17/02*** ***C 07C 17/156*** ***C 07C 17/25*** ***C 07C 19/045*** ***C 07C 21/06***	EP 2307339*	PROCESS FOR THE MANUFACTURE OF AT LEAST ONE ETHYLENE DERIVATIVE COMPOUND

(71)	(51)	Broj objave evropske prijave patenta	(54)
Solyndra, US	***A 61K 31/7135*** ***H 01L 31/048*** ***H 01L 23/10***	EP 2079475*	A sealed photovoltaic apparatus
Sooft Italia Spa, IT	***A 61N 1/36***	EP 2300098*	METHOD OF EYE TREATMENT FOR PREVENTION OF PRESBYOPIA AND GLAUCOMA, AND MEANS FOR CARRYING OUT SAID TREATMENT
Split-It Limited,GB;	***B 29C 51/16*** ***B 29C 51/10*** ***B 65D 5/56*** ***B 29C 51/42***	EP 2300213*	A METHOD FOR PRODUCING FOOD PACKAGING AND SUCH A FOOD PACKAGING
Spohn,DE;	***A 47G 9/02*** ***A 01G 9/02***	EP 2303071*	DEVICE FOR INCREASING THE STABILITY OF VESSELS, SUCH AS SAUCEPANS, VASES OR SIMILAR
Sriya Innovations, US	***C 08B 1/00*** ***C 07H 1/00*** ***B 01J 19/00***	EP 2310418*	METHOD OF EXTRACTION OF FURFURAL AND GLUCOSE FROM BIOMASS USING ONE OR MORE SUPERCRITICAL FLUIDS
SRU Biosystems, US	***C 12M 1/34***	EP 2310485*	BIOSENSOR FEATURING CONFINEMENT OF DEPOSITED MATERIAL AND INTRA-WELL SELF-REFERENCING
STC.UNM, US	***A 61K 38/16*** ***A 61P 13/12*** ***A 61P 19/02***	EP 2303306*	DEVELOPMENT OF A C-REACTIVE PROTEIN MUTANT WITH IMPROVED THERAPEUTIC BENEFIT IN IMMUNE THROMBOCYTOPENIA AND LUPUS NEPHRITIS
Stearns,US;	***C 07D 209/88*** ***C 07D 209/82*** ***A 61K 31/403*** ***A 61P 9/06***	EP 2300425*	CYCLOALKANE[B]INDOLE ANGTAGONISTS OF PROSTAGLANDIN D2 RECEPTORS
Stila A/S, DK	***E 06B 9/382*** ***E 06B 9/388*** ***E 06B 9/323***	EP 2213827	A readjustable Venetian blind, a method of configuring the blind and a method of suspending the blind
Stryker Trauma SA, CH	***A 61B 17/64***	EP 2294994	External fixation component
Studio Dentistico Dr. Jacotti Michele, IT	***A 61C 1/08***	EP 2129319*	MANUFACTURING METHOD OF A GUIDING TEMPLATE FOR DENTAL IMPLANTOLOGY, GUIDING TEMPLATE MANUFACTURED THEREBY AND REFERENCE DEVICE FOR THE EXECUTION OF SUCH METHOD
Sumitomo Chemical Company, JP	***C 07C 227/40*** ***C 07C 229/34***	EP 2298730	METHOD OF PRODUCING PURIFIED OPTICALLY ACTIVE 4-AMINO-3-(SUBSTITUTED PHENYL)BUTANOIC ACID COMPOUND
Sunrise R&D Holdings, US	***G 06F 15/173***	EP 2304592*	SYSTEM OF ACQUIRING SHOPPER INSIGHTS AND INFLUENCING SHOPPER PURCHASE DECISIONS

(71)	(51)	Broj objave evropske prijave patenta	(54)
Syngenta Limited, GB	***C 07D 207/08*** ***C 07D 207/48*** ***C 07D 211/32*** ***C 07D 211/94*** ***C 07D 211/96*** ***C 07D 307/12*** ***C 07D 309/04*** ***C 07D 307/26*** ***C 07D 309/12*** ***C 07D 335/02*** ***C 07D 401/06*** ***C 07D 405/06*** ***C 07D 409/06*** ***C 07D 413/06*** ***C 07D 491/18***	EP 2313370*	5-HETEROCYCLYLALKYL-3-HYDROXY-2-PHENYLCYCLOPENT-2-ENONES AS HERBICIDES
Syngenta Limited, GB	***C 07D 309/32*** ***C 07D 335/02*** ***C 07D 405/10*** ***C 07D 407/10*** ***C 07D 409/10*** ***C 07D 417/10*** ***C 07D 493/08*** ***A 01N 43/16*** ***C 07C 49/603***	EP 2313387*	NOVEL HERBICIDES
Syngenta Limited, GB	***C 07D 309/32*** ***C 07D 335/02*** ***C 07D 405/10*** ***C 07D 407/10*** ***C 07D 409/10*** ***C 07D 417/10*** ***C 07D 493/08*** ***C 07C 49/603*** ***A 01N 43/16***	EP 2313388*	NOVEL HERBICIDES
Syngenta Participations AG, CH	***A 01N 43/56***	EP 2196088	Fungicidal Compositions
Syngenta Participations AG, CH	***A 01N 43/56***	EP 2201839	Fungicidal compositions
Syngenta Participations AG, CH	***A 01N 43/56*** ***A 01P 3/00*** ***A 01N 37/34*** ***A 01N 37/36*** ***A 01N 43/36*** ***A 01N 43/54*** ***A 01N 43/653***	EP 2306833*	FUNGICIDAL COMPOSITIONS
Syngenta Participations AG, CH	***C 07C 13/48*** ***C 07C 209/62*** ***C 07C 211/60*** ***C 07C 13/19*** ***C 07C 17/26*** ***C 07C 17/30***	EP 2316809	Process for the preparation of benzonorbornane derivatives
Syngenta Participations AG, CH	***C 07C 209/06*** ***C 07C 211/31*** ***A 01N 45/02***	EP 2316813	Process for the preparation of amines

(71)	(51)	Broj objave evropske prijave patenta	(54)
Syngenta Participations AG, CH	***C 07C 209/28*** ***A 01N 45/02*** ***C 07C 211/31*** ***C 07C 13/19*** ***C 07C 17/26*** ***C 07C 17/30*** ***C 07C 25/18***	EP 2316814	Process for preparation of halogen substituted benzonorbornenes derivatives
Syngenta Participations AG, CH	***C 07C 209/28*** ***A 01N 45/02*** ***C 07C 211/31*** ***C 07C 13/19*** ***C 07C 17/26*** ***C 07C 17/30*** ***C 07C 25/18*** ***C 07C 23/10***	EP 2316815	Process for preparation of halogen substituted arynes
Syngenta Participations AG,CH;	***C 07D 309/32*** ***C 07D 335/02*** ***C 07D 405/10*** ***C 07D 407/10*** ***C 07D 409/10*** ***C 07D 417/10*** ***C 07D 493/08*** ***A 01N 43/16*** ***C 07C 49/603***	EP 2313387*	NOVEL HERBICIDES
Syngenta Participations AG., CH	***A 01N 43/56***	EP 2193714	Fungicidal Compositions
Syngenta Participations AG., CH	***A 01N 43/56***	EP 2193715	Fungicidal Compositions
Syngenta Participations AG., CH	***A 01N 43/56***	EP 2204093	Fungicidal Compositions
Synta Pharmaceuticals Corp., US	***C 07D 249/12*** ***C 07D 401/04*** ***C 07D 405/04*** ***C 07D 403/04*** ***A 61K 31/4196*** ***A 61P 35/00***	EP 2295416	Triazole compounds that modulate HSP90 activity
Synta Pharmaceuticals Corp., US	***C 07D 249/12*** ***C 07D 401/04*** ***C 07D 405/04*** ***C 07D 403/04*** ***A 61K 31/4196*** ***A 61P 35/00***	EP 2298748	Triazole compounds that modulate HSP90 activity
Synta Pharmaceuticals Corp., US	***C 07C 327/56*** ***A 61K 31/16*** ***A 61P 35/00***	EP 2305642	Bis(thio-hydrazide amide) salts for treatment of cancers
Syntaxin Limited, GB	***A 61K 38/00*** ***A 61P 35/00*** ***A 61P 5/00***	EP 2310028*	SUPPRESSION OF NEUROENDOCRINE DISEASES
Syntaxin Limited, GB	***A 61K 38/00*** ***C 12N 9/00*** ***A 61P 35/00***	EP 2310029*	SUPPRESSION OF CANCERS
Taiga Biotechnologies, US	***C 12N 5/10*** ***C 12N 5/00***	EP 2313496*	DIFFERENTIATED ANUCLEATED CELLS AND METHOD FOR PREPARING THE SAME

(71)	(51)	Broj objave evropske prijave patenta	(54)
Taiga Biotechnologies, US	***C 07K 14/82*** ***C 07K 19/00*** ***A 61K 38/16***	EP 2318435*	MODULATORS OF MYC, METHODS OF USING THE SAME, AND METHODS OF IDENTIFYING AGENTS THAT MODULATE MYC
Taisho Pharmaceutical Co., JP	***C 07D 317/72*** ***C 07C 67/31*** ***C 07C 67/343*** ***C 07C 69/675*** ***C 07C 69/738*** ***C 07C 69/757*** ***C 12P 7/62*** ***A 61P 43/00***	EP 2298755	METHOD OF PRODUCING BICYCLO[3.1.0]HEXANE DERIVATIVE USING ENZYME
Takeda Pharmaceutical Company Limited, JP	***A 61K 31/519*** ***A 61K 31/565*** ***A 61K 31/5377*** ***A 61K 31/337*** ***A 61K 31/704*** ***A 61K 31/4745*** ***A 61K 31/505*** ***A 61K 31/517*** ***A 61K 31/395*** ***A 61P 35/00***	EP 2063895*	COMBINATION DRUG
Takeda Pharmaceutical Company Limited, JP	***C 07D 231/56*** ***A 61K 31/416*** ***A 61K 31/428*** ***A 61K 31/433*** ***A 61K 31/437*** ***A 61P 1/04*** ***A 61P 3/06*** ***A 61P 3/10*** ***A 61P 5/00*** ***A 61P 7/10*** ***A 61P 7/12*** ***A 61P 9/00*** ***A 61P 9/10*** ***A 61P 9/12*** ***A 61P 11/08*** ***A 61P 15/00*** ***A 61P 15/08*** ***A 61P 19/10*** ***A 61P 25/14*** ***A 61P 25/16*** ***A 61P 25/18***	EP 2141150	BICYCLIC COMPOUND AND PHARMACEUTICAL USE THEREOF

(71)	(51)	Broj objave evropske prijave patenta	(54)
Takeda Pharmaceutical Company Limited, JP	***C 07D 233/90*** ***C 07D 401/12*** ***C 07D 401/14*** ***C 07D 407/12*** ***C 07D 409/06*** ***C 07D 409/14*** ***C 07D 413/06*** ***C 07D 413/14*** ***C 07D 417/06*** ***C 07D 417/12*** ***C 07D 471/04*** ***C 07D 487/04*** ***C 07D 487/08*** ***C 07D 495/04***	EP 2297114*	HETEROCYCLIC COMPOUND AND USE THEREOF
Takeda Pharmaceutical Company Limited, JP	***A 61K 9/14*** ***A 61K 9/16*** ***A 61K 9/20*** ***A 61K 9/48*** ***A 61K 47/12*** ***A 61K 47/36*** ***A 61K 47/38***	EP 2309985*	PHARMACEUTICAL COMPOSITION
Takeda Pharmaceutical Company Limited, JP	***C 07D 413/14*** ***A 61P 9/12*** ***A 61K 31/4245***	EP 2310385*	SOLID PHARMACEUTICAL COMPOSITION
Takeda Pharmaceutical Company Limited, JP	***C 07D 471/04*** ***C 07D 487/04*** ***C 07D 519/00*** ***A 61K 31/437*** ***A 61P 35/00***	EP 2313407*	cMET INHIBITORS
Takeda Pharmaceutical Company Limited, JP	***C 07D 401/14*** ***A 61K 31/444***	EP 2318390*	PYRROLE COMPOUNDS
Talecris Biotherapeutics, US	***C 12N 9/68*** ***C 12P 21/06***	EP 2297317*	COMPOSITION, METHOD AND KIT FOR PREPARING PLASMIN
Targacept Inc.,US;	***A 61K 31/13*** ***A 61K 31/4545*** ***A 61K 31/439*** ***A 61K 31/506*** ***A 61K 45/06*** ***A 61P 27/02***	EP 2296640*	METHODS FOR PREVENTING THE DEVELOPMENT OF RETINOPATHY BY THE ORAL ADMINISTRATION OF NNR LIGANDS
Tasmanian Alkaloids Pty. Ltd., AU	***A 01H 1/06*** ***A 01H 1/04*** ***A 01H 5/04*** ***A 01H 5/10***	EP 2312933*	PAPAVER SOMNIFERUM WITH HIGH CONCENTRATION OF CODEINE
TDW DELAWARE, US	***B 08B 9/055***	EP 2310149*	SPEED REGULATED PIPELINE PIG
Techem Energy Services GmbH, DE	***G 05D 23/19***	EP 1770469	Method and system for determining characteristic thermal data of a radiator
Technische Universität München, DE	***C 07K 14/47*** ***A 61K 51/08***	EP 2313430*	MUTEINS OF HNGAL AND RELATED PROTEINS WITH AFFINITY FOR A GIVEN TARGET
Technische Universität München,DE;	***A 61K 47/34*** ***A 61K 9/107***	EP 2313115*	POLYMERIC DELIVERY SYSTEMS FOR ACTIVE AGENTS

(71)	(51)	Broj objave evropske prijave patenta	(54)
Tecnomac S.R.L., IT	***F 03B 13/24*** ***F 03B 13/14*** ***F 03B 13/16*** ***F 03B 13/18***	WO 2010043987	DEVICE FOR GENERATING ELECTRIC ENERGY FROM A RENEWABLE SOURCE
Tenute S.r.l., IT	***F 16J 15/32*** ***B 29C 43/18***	EP 2278198	Seal and corresponding manufacturing method
Tenute S.r.l., IT	***F 16J 15/32***	EP 2318739*	SEAL AND CORRESPONDING MANUFACTURING METHOD
Terranol A/S, DK	***C 12N 9/92*** ***C 12P 7/10*** ***C 12R 1/865***	EP 2310499*	MICROORGANISM EXPRESSING ALDOSE-1-EPIMERASE
Teva Pharmaceutical Industries Ltd, IL	***A 61K 31/135***	EP 2299992*	PROCESS FOR PREPARING AND DRYING SOLID RASAGILINE BASE
Teva Pharmaceutical Industries Ltd., IL	***A 01N 33/02*** ***A 61K 31/135***	EP 2296462*	RASAGILINE FOR PARKINSON'S DISEASE MODIFICATION
TEVA PHARMACEUTICAL INDUSTRIES, IL	***A 01N 33/02*** ***A 61K 31/135***	EP 2101570*	TANNATE SALT OF RASAGILINE
Teva Pharmaceutical Industries, IL	***A 61K 31/135***	EP 2299993*	PROCESS FOR PURIFYING RASAGILINE BASE
TEVA PHARMACEUTICAL INDUSTRIES, IL	***A 61K 9/20*** ***A 61K 31/135***	EP 2308477	Delayed release rasagiline formulation
Teva Women's Health, US	***A 61K 9/00***	EP 2320871*	INTRAVAGINAL DEVICES WITH A RIGID SUPPORT, METHODS OF MAKING, AND USES THEREOF
Thanos,US;	***A 61K 38/18*** ***A 61K 38/20*** ***A 61K 8/64*** ***A 61P 17/02*** ***A 61Q 19/00***	EP 2318034*	WOUND HEALING
The Board of Regents of The University of Texas, US	***A 61K 47/48*** ***A 61K 49/00*** ***A 61K 51/04*** ***A 61P 9/00*** ***A 61P 9/10*** ***A 61P 9/06*** ***A 61P 35/00*** ***A 61P 35/02***	EP 2079486*	EFFICIENT SYNTHESIS OF CHELATORS FOR NUCLEAR IMAGING AND RADIOTHERAPY: COMPOSITIONS AND APPLICATIONS
The Board of Trustees of, US	***G 06Q 50/00*** ***C 12Q 1/68***	EP 2321789*	METHODS AND SYSTEMS FOR ASSESSMENT OF CLINICAL INFERTILITY
The Brigham and Women's Hospital, US	***C 07D 207/456*** ***C 07C 327/20*** ***C 07C 327/32*** ***C 07H 3/06*** ***C 08B 37/00*** ***C 07K 14/31***	EP 2315747*	METHODS AND COMPOSITIONS RELATING TO SYNTHETIC BETA-1,6 GLUCOSAMINE OLIGOSACCHARIDES
The Hershey Company, US	***A 23L 1/00***	EP 1811980*	SEALED, EDIBLE FILM STRIP PACKETS AND METHODS OF MAKING AND USING THEM
The Institute of Cancer Research, GB	***A 61K 31/00*** ***A 61K 31/502*** ***A 61P 35/00***	EP 2305221	Dna damage repair inhibitors for treatment of cancer

(71)	(51)	Broj objave evropske prijave patenta	(54)
THE MITRE CORPORATION, US	***G 06F 11/00***	EP 2137620*	INSIDER THREAT DETECTION
The National Institute For Medical Research,GB;	***G 01N 33/50*** ***G 01N 33/53*** ***C 12Q 1/00***	EP 2300823*	BLOOD TRANSCRIPTIONAL SIGNATURE OF MYCOBACTERIUM TUBERCULOSIS INFECTION
The Regents of the University of California, US	***A 61K 9/16*** ***A 61P 27/16*** ***A 61K 38/22*** ***A 61K 38/48***	EP 2296632*	CONTROLLED-RELEASE APOPTOSIS MODULATING COMPOSITIONS AND METHODS FOR THE TREATMENT OF OTIC DISORDERS
The Regents of the University of California, US	***A 61K 9/127*** ***A 61K 9/16*** ***A 61K 47/34*** ***A 61P 27/16***	EP 2299976*	CONTROLLED RELEASE AURIS SENSORY CELL MODULATOR COMPOSITIONS AND METHODS FOR THE TREATMENT OF OTIC DISORDERS
The Regents of the University of California, US	***A 61K 9/16*** ***A 61P 31/04*** ***A 61P 27/16*** ***A 61K 47/34*** ***A 61K 9/14***	EP 2299979*	CONTROLLED RELEASE ANTIMICROBIAL COMPOSITIONS AND METHODS FOR THE TREATMENT OF OTIC DISORDERS
The Regents of the University of California, US	***A 61K 9/06*** ***A 61P 27/16*** ***A 61K 9/14*** ***A 61K 9/16*** ***A 61K 31/573*** ***A 61K 47/34***	EP 2303227*	CONTROLLED RELEASE CORTICOSTEROID COMPOSITIONS AND METHODS FOR THE TREATMENT OF OTIC DISORDERS
The Regents of the University of California, US	***A 61K 9/06*** ***A 61P 27/16*** ***A 61K 31/045*** ***A 61K 9/16*** ***A 61K 47/34***	EP 2306975*	CONTROLLED-RELEASE OTIC STRUCTURE MODULATING AND INNATE IMMUNE SYSTEM MODULATING COMPOSITIONS AND METHODS FOR THE TREATMENT OF OTIC DISORDERS
The Regents of the University of Michigan, US	***A 61K 39/29***	EP 2293813*	NANOEMULSION VACCINES
The Regents of the University of Michigan, US	***A 61K 39/38***	EP 2293814*	NANOEMULSION ADJUVANTS
The Robbins Company, US	***E 21D 9/06*** ***E 21D 9/08***	EP 2304177*	APPARATUS AND METHOD FOR MONITORING TUNNEL BORING EFFICIENCY
The Trustees of Columbia University in the City of, US	***A 61K 31/553*** ***C 07D 281/02***	EP 2311464	Agents for preventing and treating disorders involving modulation of the ryr receptors
The UAB Research Foundation, US	***C 12N 15/62*** ***C 12N 15/861*** ***A 61K 48/00*** ***A 61K 39/00***	EP 2304034*	AN ADAPTER MOLECULE FOR THE DELIVERY OF ADENOVIRUS VECTORS
THE UNIVERSITY OF GEORGIA RESEARCH FOUNDATION, US	***C 12N 5/0775*** ***C 12N 5/02*** ***A 61K 35/12***	EP 2318520*	COMPOSITIONS FOR MESODERM DERIVED ISL1+ MULTIPOTENT CELLS (IMPS), EPICARDIAL PROGENITOR CELLS (EPCS) AND MULTIPOTENT CXCR4+CD56+ CELLS (C56CS) AND METHODS OF USE
Therm-Tech AS, NO	***H 01L 35/00*** ***H 02J 7/00***	EP 2321859*	BATTERY CHARGER AND POWER SUPPLY

(71)	(51)	Broj objave evropske prijave patenta	(54)
Thorn Europhane S.A., FR	***F 21S 8/08*** ***F 21V 7/09***	EP 2230445	Lighting unit and luminaire for lighting pedestrian crossings
Tibotec Pharmaceuticals, IE	***C 07D 513/18*** ***C 07D 515/18*** ***A 61K 31/55*** ***A 61P 31/14***	EP 2310396*	MACROCYCLIC INDOLE DERIVATIVES USEFUL AS HEPATITIS C VIRUS INHIBITORS
Tohoku Pioneer Corporation, JP	***H 04R 1/10***	EP 2299730	EARPHONE
Tohoku Pioneer Corporation, JP	***H 04R 9/02*** ***H 04R 9/00*** ***H 04R 9/04***	EP 2302949	SPEAKER DEVICE
Toler,US;	***A 61K 31/13*** ***A 61K 31/4545*** ***A 61K 31/439*** ***A 61K 31/506*** ***A 61K 45/06*** ***A 61P 27/02***	EP 2296640*	METHODS FOR PREVENTING THE DEVELOPMENT OF RETINOPATHY BY THE ORAL ADMINISTRATION OF NNR LIGANDS
Total S.A.,FR;	***C 12N 9/42*** ***C 12N 15/74*** ***C 12P 21/02*** ***C 12N 15/62*** ***C 12P 7/10***	EP 2318524*	CONSTRUCTS AND METHODS FOR THE PRODUCTION AND SECRETION OF POLYPEPTIDES
Totton Pumps Limited, GB	***F 25D 31/00*** ***B 67D 1/08***	EP 2135022*	A MOTOR PROTECTION DEVICE
TransTech Pharma, US	***A 01N 43/78*** ***A 61K 31/425***	EP 2320738*	SUBSTITUTED AMINOTHIAZOLE DERIVATIVES, PHARMACEUTICAL COMPOSITIONS, AND METHODS OF USE
Traslational Cancer Drugs Pharma, ES	***C 12Q 1/68***	EP 2316970	METHODS FOR THE TREATMENT AND DIAGNOSIS OF CANCER
Treffler, DE	***A 01B 49/02***	EP 2279652	Grubber
Tremco illbruck Produktion GmbH, DE	***E 04B 1/68*** ***E 06B 1/62***	EP 2297411*	FOAM SEALING STRIP
Tremco illbruck Produktion GmbH, DE	***E 06B 1/62***	EP 2304152*	WINDOW FRAME, METHOD FOR FITTING A WINDOW, FOAM SEALING STRIP, METHOD FOR SEALING A WINDOW FRAME AND CONTAINER COMPRISING A FOAM SEALING STRIP
Trilliant Networks, US	***H 04W 4/00***	EP 2321983*	A SYSTEM AND METHOD FOR IMPLEMENTING MESH NETWORK COMMUNICATIONS USING A MESH NETWORK PROTOCOL
Truong, US	***C 07D 209/88*** ***C 07D 209/82*** ***A 61K 31/403*** ***A 61P 9/06***	EP 2300425*	CYCLOALKANE[B]INDOLE ANGTAGONISTS OF PROSTAGLANDIN D2 RECEPTORS
Tyratech, US	***A 01N 25/00***	EP 2309846*	PEST-CONTROL COMPOSITIONS AND METHODS HAVING HIGH TARGET AND LOW NON-TARGET ACTIVITY
UCB Pharma GmbH, DE	***A 61K 31/165*** ***A 61P 21/00*** ***A 61P 19/00***	EP 2308482	Novel use of peptide compounds for treating muscle pain

(71)	(51)	Broj objave evropske prijave patenta	(54)
UCB Pharma S.A., BE	***C 07D 403/06*** ***C 07D 471/04*** ***C 07D 473/00*** ***C 07D 487/04*** ***C 07D 513/04*** ***A 61P 25/00*** ***A 61K 31/4192*** ***A 61K 31/437*** ***A 61K 31/4196*** ***A 61K 31/5025*** ***A 61K 31/404*** ***A 61K 31/431***	EP 2308870	2-oxo-1-pyrrolidine deriatives, processes for preparing them and their uses
UCB Pharma, BE	***C 07D 211/38*** ***C 07D 211/46*** ***C 07D 213/75*** ***C 07D 295/192*** ***C 07D 295/096*** ***A 61K 31/397*** ***A 61K 31/40*** ***A 61K 31/435*** ***A 61K 31/445*** ***A 61K 31/4453*** ***A 61K 31/495*** ***A 61K 31/496*** ***A 61K 31/5355*** ***A 61K 31/5375*** ***A 61K 31/5377***	EP 2300426*	COMPOUNDS COMPRISING A CYCLOBUTOXY GROUP
Unicharm Corporation, JP	***A 47K 7/00*** ***A 47K 10/16*** ***A 47K 10/20*** ***A 47K 10/42*** ***B 65D 83/08***	EP 2305086	STACKED SHEET BODY AND SHEET STORING DEVICE
Unicharm Corporation, JP	***B 65D 83/08*** ***A 47K 7/00***	EP 2308773	CONTAINING DEVICE
Unicharm Corporation, JP	***B 65D 83/08*** ***A 47K 7/00***	EP 2308774	PACKAGE BODY
UNI-CHARM CORPORATION, JP	***A 47L 13/10*** ***A 47L 13/20***	EP 2308361	CLEANER AND CLEANING BODY
Universität Duisburg-Essen, DE	***A 61K 9/50*** ***A 61K 9/51*** ***A 61K 9/16*** ***A 61K 31/755*** ***A 61N 1/02***	EP 2296635*	ARTIFICIAL OXYGEN CARRIERS AND USE THEREOF
Universität Duisburg-Essen, DE	***C 01B 31/00*** ***H 01M 4/38*** ***H 01M 4/04*** ***H 01M 4/08*** ***H 01M 4/58***	EP 2303774*	INTERCALATION OF SILICON AND/OR TIN INTO POROUS CARBON SUBSTRATES
Universiteit Twente, NL	***C 12N 5/00***	EP 2310491*	SELF-ASSEMBLING TISSUE MODULES

(71)	(51)	Broj objave evropske prijave patenta	(54)
University of Florida Research Foundation, US	***A 01N 43/00*** ***A 61K 31/33*** ***A 61K 31/00*** ***A 61K 31/352*** ***A 61K 31/366*** ***A 61P 9/00*** ***A 61P 9/12*** ***A 61P 11/00*** ***A 61P 13/12***	EP 2101575*	ACE2 ACTIVATOR COMPOUNDS AND METHODS OF USE THEREOF
University of Maryland, US	***A 01G 25/16***	EP 2306806*	WIRELESS SENSOR SYSTEM FOR ENVIRONMENTAL MONITORING
UNIVERSITY OF MASSACHUSETTS MEDICAL SCHOOL, US	***A 61K 38/00*** ***C 07K 14/705*** ***C 07K 7/08***	EP 2101802*	INHIBITING COLLAGEN-INDUCED PLATELET AGGREGATION AND ACTIVATION WITH PEPTIDE VARIANTS
University of Nebraska Medical Center, US	***A 61K 47/34*** ***A 61K 9/107***	EP 2313115*	POLYMERIC DELIVERY SYSTEMS FOR ACTIVE AGENTS
University Of Pennsylvania, US	***C 07K 14/705***	EP 2297198*	FN14/TRAIL FUSION PROTEINS
University of Zürich, CH	***C 07K 16/18***	EP 2321348*	METHOD OF PROMOTING NEUROGENESIS
U-POL LTD, GB	***B 05B 7/24*** ***F 16K 5/00***	EP 2303466*	A CONNECTOR FOR A GRAVITY FEED SPRAY GUN, A GRAVITY FEED SPRAY GUN AND A METHOD OF PREPARING A SPRAY PAINT
Uvån Hagfors Teknologi Aktiebolag, SE	***B 65G 53/50***	EP 2297011*	METHOD AND DEVICE FOR OUTPUT OF GRANULATE FROM THE BOTTOM OF A TANK THAT IN ADDITION TO GRANULATE HOLDS LIQUID
Valeant Pharmaceuticals International, US	***A 61K 31/44***	EP 2318001*	MODIFIED RELEASE FORMULATION AND METHODS OF USE
Valio Ltd., FI	***A 23C 9/13*** ***A 23C 9/127*** ***A 23C 9/15*** ***A 23L 1/20***	EP 2117329*	METHOD FOR MODIFYING STRUCTURE OF LOW-ENERGY PRODUCT
Vallon GmbH, DE	***G 01V 11/00***	EP 2026106	Method for geo-referenced representation of measuring values of a measuring field determined using ground detectors and detector for use
Vantia Limited, GB	***C 07D 213/73*** ***C 07D 401/12*** ***C 07D 401/14*** ***C 07D 409/12*** ***C 07D 409/14*** ***C 07D 413/12*** ***C 07D 417/12*** ***A 61K 31/5377*** ***A 61K 31/44*** ***A 61K 31/4439*** ***A 61K 31/4436*** ***A 61K 31/444*** ***A 61K 31/4725*** ***A 61K 31/4709*** ***A 61P 29/00***	EP 2300428*	AMINOPYRIDINE DERIVATIVES

(71)	(51)	Broj objave evropske prijave patenta	(54)
Vernalis (R&D) Limited, GB	***C 07D 487/04*** ***A 61K 31/505*** ***A 61P 25/28***	EP 2321321*	TRIAZOLO [4, 5-D]PYRAMIDINE DERIVATIVES AND THEIR USE AS PURINE RECEPTOR ANTAGONISTS
Verutek Technologies, US	***B 22F 1/00*** ***B 22F 9/24*** ***B 82B 1/00***	EP 2315639*	GREEN SYNTHESIS OF NANOMETALS USING PLANT EXTRACTS AND USE THEREOF
Viridis Pharmaceutical Limited, VG	***A 61K 9/00*** ***A 23L 1/304*** ***A 23L 2/52*** ***A 61K 33/06*** ***A 61K 33/10*** ***A 61K 33/14*** ***A 61K 47/12***	EP 2298276	Accelerating agent of calcium absorption
Vision Tech S.r.l., IT	***F 16G 3/10*** ***F 16G 3/08***	WO 2010015919	BELT PIECE FOR THE TRANSPORT OF ARTICLES AND/OR FOR POWER TRANSMISSIONS AND METHOD FOR OBTAINING A CLOSED LOOPED BELT STARTING FROM SAID BELT PIECE
Vision Tech S.r.l., IT	***F 16G 3/10*** ***F 16G 3/08***	EP 2321552*	BELT PIECE FOR THE TRANSPORT OF ARTICLES AND/OR FOR POWER TRANSMISSIONS AND METHOD FOR OBTAINING A CLOSED LOOPED BELT STARTING FROM SAID BELT PIECE
Vitae Pharmaceuticals, US	***C 07D 309/04*** ***C 07D 405/12*** ***A 61K 31/435*** ***A 61P 9/00***	EP 2074108*	RENIN INHIBITORS
Vitae Pharmaceuticals,US;	***C 07D 413/10*** ***C 07D 413/14*** ***A 61K 31/5355*** ***A 61P 19/10***	EP 2300461*	CYCLIC INHIBITORS OF 11BETA-HYDROXYSTEROID DEHYDROGENASE 1
Vossloh-Werke GmbH, DE	***E 01B 9/30*** ***E 01B 9/48***	EP 2204494	Elastic tensioning clamp and rail attachment for same
Vossloh-Werke GmbH, DE	***E 01B 9/30***	EP 2318587*	ANGULAR GUIDE PLATE AND SYSTEM FOR FIXING A RAIL
Wadkins, US	***F 28G 15/02***	EP 2310794*	SOOTBLOWER WITH MODULAR CANOPY
Walrus Pump Co., TW	***F 16K 31/08*** ***F 16K 15/02***	EP 2233807	Check valve and pump with the same
Wavin B.V., NL	***F 16L 41/02*** ***F 16L 47/32*** ***H 02G 15/013*** ***H 02G 15/113*** ***G 02B 6/44***	EP 2045504	connecting piece for protective cable pipes
Weber-Stephen Products CO., US	***A 47J 37/07***	EP 2131707*	BARBECUE GRILL
Weber-Stephen Products CO., US	***F 23Q 3/00*** ***F 23D 14/20*** ***F 24C 3/10***	EP 2294337*	GAS BURNER ASSEMBLY WITH GAS COLLECTOR AND IGNITER
Weidlich, DE	***B 41C 1/045***	EP 2305464	Method for engraving a surface, a surface of a printing plate for gravure printing and a surface produced according to the method
Weinkle,US;	***F 28G 15/02***	EP 2310794*	SOOTBLOWER WITH MODULAR CANOPY

(71)	(51)	Broj objave evropske prijave patenta	(54)
WILD Dairy Ingredients GmbH, DE	***A 23L 1/06*** ***A 23L 1/212*** ***A 23L 1/064*** ***A 23L 1/068***	EP 2263476	Fruit preparation
Winter, DE	***A 47G 9/02*** ***A 01G 9/02***	EP 2303071*	DEVICE FOR INCREASING THE STABILITY OF VESSELS, SUCH AS SAUCEPANS, VASES OR SIMILAR BUILDING
Wolf Modul GmbH, AT	***E 04B 1/26***	EP 2115228*	
Wyeth LLC, US	***A 61F 7/03***	EP 2296595*	PORTABLE MOIST HEAT SYSTEM
Wyeth LLC, US	***C 07D 498/08*** ***A 61K 31/53*** ***A 61P 35/00***	EP 2300483*	TRIAZINE COMPOUNDS AS P13 KINASE AND MTOR INHIBITORS
Wyeth Pharmaceuticals, US	***C 07D 231/40*** ***C 07D 401/04*** ***C 07D 403/04*** ***C 07D 403/12*** ***C 07D 403/14*** ***C 07D 407/04*** ***C 07D 407/14*** ***C 07D 409/04*** ***C 07D 413/12*** ***C 07D 473/04*** ***C 07D 487/04*** ***A 61K 31/4155*** ***A 61P 25/00***	EP 2118067*	NICOTINIC ACETYLCHOLINE RECEPTOR MODULATORS
Yale University, US	***A 01N 37/18***	EP 2299812*	TARGETING TGF- AS A THERAPY FOR ALZHEIMER'S DISEASE
Yao, US	***G 06F 19/00***	EP 2137596*	METHOD AND SYSTEM FOR ORGANIZING, STORING, CONNECTING AND DISPLAYING MEDICAL INFORMATION
Yeda Research and Development Co., IL	***A 01N 37/18*** ***A 61K 38/00*** ***A 61K 31/785*** ***A 61K 31/198*** ***A 61K 38/16*** ***A 61P 25/28***	EP 2111105*	METHOD OF DELAYING THE ONSET OF CLINICALLY DEFINITE MULTIPLE SCLEROSIS
YKK Corporation of America, US	***D 03D 1/00*** ***D 03D 11/00*** ***D 03D 11/02*** ***D 03D 15/00*** ***D 03D 15/08*** ***D 06C 7/02*** ***D 03D 15/04***	EP 2294255*	SHOCK ABSORBING FABRIC STRUCTURES
Yoo, US	***A 01N 43/04*** ***A 01N 63/00*** ***A 01N 65/00*** ***A 61K 31/70*** ***A 61K 48/00*** ***A 61K 39/00***	EP 2114153*	TREATMENT AND PREVENTION OF NEURODEGENERATIVE DISEASES USING GENE THERAPY
ZaCh System S.p.A., IT	***C 07D 495/04***	EP 2300480*	PROCESS FOR THE PREPARATION OF CLOPIDOGREL HYDROGEN SULFATE CRYSTALLINE FORM I

(71)	(51)	Broj objave evropske prijave patenta	(54)
Zafgen, US	***A 01N 37/18***	EP 2317845*	METHODS OF TREATING AN OVERWEIGHT OR OBESE SUBJECT
Zanichelli Meccanica S.p.A., IT	***B 65B 25/04*** ***B 65B 19/34*** ***B 65B 5/04***	EP 2321183*	PADDING MACHINE FOR PACKAGING SUBSTANTIAL PRODUCTS, PARTICULARLY CUCUMBERS AND THE LIKE
Zeon Chemicals L.P., US	***C 08L 67/02***	EP 2294133*	FAST CURING VULCANIZABLE MULTI-PART ELASTOMER COMPOSITION, AND PROCESS FOR BLENDING, INJECTION MOLDING AND CURING OF ELASTOMER COMPOSITION
Zott GmbH & Co. KG, DE	***A 23C 19/045*** ***A 23C 19/09***	EP 2293680*	FOOD WITH CHEESE CONTAINED THEREIN

ИНДЕКС ОБЈАВЉЕНИХ ЗАХТЕВА ЗА ПРОШИРЕЊЕ ЕВРОПСКИХ ПРИЈАВА ПАТЕНАТА ПРЕМА КЛАСИФИКАЦИОНОЈ ОЗНАЦИ ПО МЕЂУНАРОДНОЈ КЛАСИФИКАЦИЈИ ПАТЕНАТА

(51)	Број објаве европске пријаве патента	(51)
A 01B 33/08	EP 2232972	Rotary harrow
A 01B 49/02	EP 2279652	Grubber
A 01D 43/08	EP 2218321	A forage harvester having a blower
A 01G 9/02	EP 2303071*	DEVICE FOR INCREASING THE STABILITY OF VESSELS, SUCH AS SAUCEPANS, VASES OR SIMILAR
A 01G 9/10	EP 2299802*	METHOD FOR MANUFACTURING A PLANT SUBSTRATE AND PLANT SUBSTRATE
A 01G 9/18	EP 2309841*	APPARATUS FOR REDUCING CARBON DIOXIDE CONTAINED IN COMBUSTION SMOKES
A 01G 13/02	EP 2322037	PESTICIDE COMPOSITION AND FRUIT BAG
A 01G 25/16	EP 2306806*	WIRELESS SENSOR SYSTEM FOR ENVIRONMENTAL MONITORING
A 01G 31/00	EP 2299802*	METHOD FOR MANUFACTURING A PLANT SUBSTRATE AND PLANT SUBSTRATE
A 01H 1/04	EP 2312933*	PAPAVER SOMNIFERUM WITH HIGH CONCENTRATION OF CODEINE
A 01H 1/06	EP 2312933*	PAPAVER SOMNIFERUM WITH HIGH CONCENTRATION OF CODEINE
A 01H 5/00	EP 2297192*	PLANTS HAVING ENHANCED YIELD-RELATED TRAITS AND A METHOD FOR MAKING THE SAME BY OVEREXPRESSING A POLYNUCLEOTIDE ENCODING A TFL1-LIKE PROTEIN
A 01H 5/04	EP 2312933*	PAPAVER SOMNIFERUM WITH HIGH CONCENTRATION OF CODEINE
A 01H 5/10	EP 2312933*	PAPAVER SOMNIFERUM WITH HIGH CONCENTRATION OF CODEINE
A 01K 61/00	EP 2306813*	FISHFARMING PEN
A 01K 67/00	EP 2303001*	METHOD FOR TESTING EFFICACY OF TREATMENT OF NEUROLOGIC DISORDERS
A 01N 25/00	EP 2225940	Oil dispersions of nAChR binding neonicotinoids
A 01N 25/00	EP 2309846*	PEST-CONTROL COMPOSITIONS AND METHODS HAVING HIGH TARGET AND LOW NON-TARGET ACTIVITY
A 01N 25/02	EP 2309863*	CONCENTRATE FOR PREPARING A DISINFECTANT AND METHODS FOR ITS PREPARATION AND USE
A 01N 25/04	EP 2225940	Oil dispersions of nAChR binding neonicotinoids
A 01N 25/04	EP 2322037	PESTICIDE COMPOSITION AND FRUIT BAG
A 01N 25/10	EP 2305029	METHOD FOR PRODUCING EXTENDED-RELEASE PREPARATION COMPOSITION
A 01N 25/16	EP 2114144*	FOAMABLE COMPOSITION FOR KILLING ARTHROPODS AND USES THEREOF
A 01N 25/22	EP 2010021404	METHOD FOR CONTROLLING DEGRADATION OF AGRICULTURAL CHEMICAL ACTIVE INGREDIENT
A 01N 25/22	EP 2114144*	FOAMABLE COMPOSITION FOR KILLING ARTHROPODS AND USES THEREOF
A 01N 25/22	EP 2309863*	CONCENTRATE FOR PREPARING A DISINFECTANT AND METHODS FOR ITS PREPARATION AND USE
A 01N 25/22	EP 2320733*	METHOD FOR CONTROLLING DEGRADATION OF AGRICULTURAL CHEMICAL ACTIVE INGREDIENT
A 01N 25/28	EP 2307129*	MICROCAPSULES COMPRISING ACTIVE INGREDIENTS AND A METAL OXIDE SHELL, A METHOD FOR THEIR PREPARATION AND USES THEREOF
A 01N 25/30	EP 2225940	Oil dispersions of nAChR binding neonicotinoids
A 01N 25/30	EP 2306831*	PESTICIDAL COMPOSITION
A 01N 25/30	EP 2322037	PESTICIDE COMPOSITION AND FRUIT BAG
A 01N 25/34	EP 2322037	PESTICIDE COMPOSITION AND FRUIT BAG

(51)	Број објаве европске пријаве патента	(51)
A 01N 27/00	EP 2114144*	FOAMABLE COMPOSITION FOR KILLING ARTHROPODS AND USES THEREOF
A 01N 31/00	EP 2299810*	TOPICAL PHARMACEUTICAL FORMULATIONS CONTAINING A LOW CONCENTRATION OF BENZOYL PEROXIDE IN SUSPENSION IN WATER AND A WATER-MISCIBLE ORGANIC SOLVENT
A 01N 31/02	EP 2135507	DISINFECTANT
A 01N 31/14	EP 2306834*	FUNGICIDAL MIXTURES COMPRISING SUBSTITUTED 1-METHYLPYRAZOL-4-YLCARBOXANILIDES
A 01N 33/02	EP 2101570*	TANNATE SALT OF RASAGILINE
A 01N 33/02	EP 2296462*	RASAGILINE FOR PARKINSON'S DISEASE MODIFICATION
A 01N 35/02	EP 2296463*	COMPOSITION HAVING BIOCIDE ACTIVITY FOR AQUEOUS PREPARATIONS
A 01N 35/04	EP 2242366*	PLANT HEALTH COMPOSITION
A 01N 35/04	EP 2259675*	FUNGICIDAL COMPOSITIONS COMPRISING 3'-BROMINE-2,3,4,6'-TETRAMETHOXY-2'-6-DIMETHYLBENZOPHENONE
A 01N 35/04	EP 2296463*	COMPOSITION HAVING BIOCIDE ACTIVITY FOR AQUEOUS PREPARATIONS
A 01N 37/02	EP 2306834*	FUNGICIDAL MIXTURES COMPRISING SUBSTITUTED 1-METHYLPYRAZOL-4-YLCARBOXANILIDES
A 01N 37/04	EP 2296463*	COMPOSITION HAVING BIOCIDE ACTIVITY FOR AQUEOUS PREPARATIONS
A 01N 37/18	EP 2111105*	METHOD OF DELAYING THE ONSET OF CLINICALLY DEFINITE MULTIPLE SCLEROSIS
A 01N 37/18	EP 2299812*	TARGETING TGF- AS A THERAPY FOR ALZHEIMER'S DISEASE
A 01N 37/18	EP 2309852*	NOVEL METHOD
A 01N 37/18	EP 2317845*	METHODS OF TREATING AN OVERWEIGHT OR OBESE SUBJECT
A 01N 37/20	EP 2242366*	PLANT HEALTH COMPOSITION
A 01N 37/20	EP 2303022*	SYNERGISTIC HERBICIDAL COMBINATION OF CLOMAZONE AND PETHOXAMID
A 01N 37/22	EP 2296480*	HERBICIDAL COMPOSITIONS COMPRISING 4-AMINO-3,6-DICHLOROPYRIDINE-2-CARBOXYLIC ACID
A 01N 37/24	EP 2242366*	PLANT HEALTH COMPOSITION
A 01N 37/24	EP 2296480*	HERBICIDAL COMPOSITIONS COMPRISING 4-AMINO-3,6-DICHLOROPYRIDINE-2-CARBOXYLIC ACID
A 01N 37/26	EP 2296480*	HERBICIDAL COMPOSITIONS COMPRISING 4-AMINO-3,6-DICHLOROPYRIDINE-2-CARBOXYLIC ACID
A 01N 37/28	EP 2306834*	FUNGICIDAL MIXTURES COMPRISING SUBSTITUTED 1-METHYLPYRAZOL-4-YLCARBOXANILIDES
A 01N 37/34	EP 2306833*	FUNGICIDAL COMPOSITIONS
A 01N 37/36	EP 2135507	DISINFECTANT
A 01N 37/36	EP 2242366*	PLANT HEALTH COMPOSITION
A 01N 37/36	EP 2306833*	FUNGICIDAL COMPOSITIONS
A 01N 37/38	EP 2240027*	PLANT HEALTH COMPOSITION
A 01N 37/38	EP 2242366*	PLANT HEALTH COMPOSITION
A 01N 37/38	EP 2306834*	FUNGICIDAL MIXTURES COMPRISING SUBSTITUTED 1-METHYLPYRAZOL-4-YLCARBOXANILIDES
A 01N 37/40	EP 2306834*	FUNGICIDAL MIXTURES COMPRISING SUBSTITUTED 1-METHYLPYRAZOL-4-YLCARBOXANILIDES
A 01N 37/42	EP 2306834*	FUNGICIDAL MIXTURES COMPRISING SUBSTITUTED 1-METHYLPYRAZOL-4-YLCARBOXANILIDES
A 01N 37/44	EP 2306834*	FUNGICIDAL MIXTURES COMPRISING SUBSTITUTED 1-METHYLPYRAZOL-4-YLCARBOXANILIDES
A 01N 37/46	EP 2240027*	PLANT HEALTH COMPOSITION
A 01N 37/46	EP 2242366*	PLANT HEALTH COMPOSITION
A 01N 37/50	EP 2240027*	PLANT HEALTH COMPOSITION
A 01N 37/50	EP 2242366*	PLANT HEALTH COMPOSITION
A 01N 37/52	EP 2242366*	PLANT HEALTH COMPOSITION

(51)	Број објаве европске пријаве патента	(51)
A 01N 41/02	EP 2306834*	FUNGICIDAL MIXTURES COMPRISING SUBSTITUTED 1-METHYLPYRAZOL-4-YLCARBOXANILIDES
A 01N 41/06	EP 2242366*	PLANT HEALTH COMPOSITION
A 01N 41/10	EP 2306834*	FUNGICIDAL MIXTURES COMPRISING SUBSTITUTED 1-METHYLPYRAZOL-4-YLCARBOXANILIDES
A 01N 43/00	EP 2101575*	ACE2 ACTIVATOR COMPOUNDS AND METHODS OF USE THEREOF
A 01N 43/04	EP 2114153*	TREATMENT AND PREVENTION OF NEURODEGENERATIVE DISEASES USING GENE THERAPY
A 01N 43/08	EP 2306834*	FUNGICIDAL MIXTURES COMPRISING SUBSTITUTED 1-METHYLPYRAZOL-4-YLCARBOXANILIDES
A 01N 43/10	EP 2296480*	HERBICIDAL COMPOSITIONS COMPRISING 4-AMINO-3,6-DICHLOROPYRIDINE-2-CARBOXYLIC ACID
A 01N 43/16	EP 2313387*	NOVEL HERBICIDES
A 01N 43/16	EP 2313388*	NOVEL HERBICIDES
A 01N 43/22	EP 2306834*	FUNGICIDAL MIXTURES COMPRISING SUBSTITUTED 1-METHYLPYRAZOL-4-YLCARBOXANILIDES
A 01N 43/24	EP 2306834*	FUNGICIDAL MIXTURES COMPRISING SUBSTITUTED 1-METHYLPYRAZOL-4-YLCARBOXANILIDES
A 01N 43/28	EP 2306834*	FUNGICIDAL MIXTURES COMPRISING SUBSTITUTED 1-METHYLPYRAZOL-4-YLCARBOXANILIDES
A 01N 43/30	EP 2242366*	PLANT HEALTH COMPOSITION
A 01N 43/32	EP 2242366*	PLANT HEALTH COMPOSITION
A 01N 43/36	EP 2240027*	PLANT HEALTH COMPOSITION
A 01N 43/36	EP 2242366*	PLANT HEALTH COMPOSITION
A 01N 43/36	EP 2306833*	FUNGICIDAL COMPOSITIONS
A 01N 43/40	EP 2225940	Oil dispersions of nAChR binding neonicotinoids
A 01N 43/40	EP 2296480*	HERBICIDAL COMPOSITIONS COMPRISING 4-AMINO-3,6-DICHLOROPYRIDINE-2-CARBOXYLIC ACID
A 01N 43/40	EP 2322037	PESTICIDE COMPOSITION AND FRUIT BAG
A 01N 43/42	EP 2299821*	NOVEL TRICYCLIC COMPOUNDS
A 01N 43/50	EP 2010021404	METHOD FOR CONTROLLING DEGRADATION OF AGRICULTURAL CHEMICAL ACTIVE INGREDIENT
A 01N 43/50	EP 2124563*	BENZIMIDAZOLE TRPV1 INHIBITORS
A 01N 43/50	EP 2320733*	METHOD FOR CONTROLLING DEGRADATION OF AGRICULTURAL CHEMICAL ACTIVE INGREDIENT
A 01N 43/52	EP 2312951*	BICYCLIC COMPOUNDS HAVING ANTIMITOTIC AND/OR ANTITUMOR ACTIVITY AND METHODS OF USE THEREOF
A 01N 43/54	EP 2240027*	PLANT HEALTH COMPOSITION
A 01N 43/54	EP 2306833*	FUNGICIDAL COMPOSITIONS
A 01N 43/56	EP 2193714	Fungicidal Compositions
A 01N 43/56	EP 2193715	Fungicidal Compositions
A 01N 43/56	EP 2196088	Fungicidal Compositions
A 01N 43/56	EP 2201839	Fungicidal compositions
A 01N 43/56	EP 2204093	Fungicidal Compositions
A 01N 43/56	EP 2240027*	PLANT HEALTH COMPOSITION
A 01N 43/56	EP 2242366*	PLANT HEALTH COMPOSITION
A 01N 43/56	EP 2296480*	HERBICIDAL COMPOSITIONS COMPRISING 4-AMINO-3,6-DICHLOROPYRIDINE-2-CARBOXYLIC ACID
A 01N 43/56	EP 2306831*	PESTICIDAL COMPOSITION
A 01N 43/56	EP 2306833*	FUNGICIDAL COMPOSITIONS
A 01N 43/56	EP 2306834*	FUNGICIDAL MIXTURES COMPRISING SUBSTITUTED 1-METHYLPYRAZOL-4-YLCARBOXANILIDES
A 01N 43/58	EP 2120579*	INHIBITORS OF POLY(ADP-RIBOSE)POLYMERASE
A 01N 43/58	EP 2315521*	DIAMINO-PYRIDINE, PYRIMIDINE, AND PYRIDAZINE MODULATORS OF THE HISTAMINE H 4 RECEPTOR
A 01N 43/62	EP 2317852*	PHARMACEUTICAL FORMULATIONS CONTAINING DOPAMINE RECEPTOR LIGANDS
A 01N 43/64	EP 2296475*	TRIAZOLOPYRIDINE JAK INHIBITOR COMPOUNDS AND METHODS

(51)	Број објаве европске пријаве патента	(51)
A 01N 43/653	EP 2240027*	PLANT HEALTH COMPOSITION
A 01N 43/653	EP 2259675*	FUNGICIDAL COMPOSITIONS COMPRISING 3'-BROMINE-2,3,4,6'-TETRAMETHOXY-2'-6-DIMETHYLBENZOPHENONE
A 01N 43/653	EP 2306833*	FUNGICIDAL COMPOSITIONS
A 01N 43/78	EP 2296480*	HERBICIDAL COMPOSITIONS COMPRISING 4-AMINO-3,6-DICHLOROPYRIDINE-2-CARBOXYLIC ACID
A 01N 43/78	EP 2320738*	SUBSTITUTED AMINOTHIAZOLE DERIVATIVES, PHARMACEUTICAL COMPOSITIONS, AND METHODS OF USE
A 01N 43/80	EP 2303022*	SYNERGISTIC HERBICIDAL COMBINATION OF CLOMAZONE AND PETHOXAMID
A 01N 43/80	EP 2303874*	SULFONAMIDE COMPOUNDS
A 01N 43/82	EP 2296480*	HERBICIDAL COMPOSITIONS COMPRISING 4-AMINO-3,6-DICHLOROPYRIDINE-2-CARBOXYLIC ACID
A 01N 45/02	EP 2316813	Process for the preparation of amines
A 01N 45/02	EP 2316814	Process for preparation of halogen substituted benzonorbornenes derivatives
A 01N 45/02	EP 2316815	Process for preparation of halogen substituted arynes
A 01N 47/02	EP 2240027*	PLANT HEALTH COMPOSITION
A 01N 47/24	EP 2240027*	PLANT HEALTH COMPOSITION
A 01N 47/26	EP 2240027*	PLANT HEALTH COMPOSITION
A 01N 47/34	EP 2240027*	PLANT HEALTH COMPOSITION
A 01N 47/38	EP 2240027*	PLANT HEALTH COMPOSITION
A 01N 47/40	EP 2225940	Oil dispersions of nAChR binding neonicotinoids
A 01N 47/40	EP 2305029	METHOD FOR PRODUCING EXTENDED-RELEASE PREPARATION COMPOSITION
A 01N 47/40	EP 2322037	PESTICIDE COMPOSITION AND FRUIT BAG
A 01N 47/44	EP 2322037	PESTICIDE COMPOSITION AND FRUIT BAG
A 01N 51/00	EP 2225940	Oil dispersions of nAChR binding neonicotinoids
A 01N 51/00	EP 2322037	PESTICIDE COMPOSITION AND FRUIT BAG
A 01N 55/10	EP 2114144*	FOAMABLE COMPOSITION FOR KILLING ARTHROPODS AND USES THEREOF
A 01N 57/14	EP 2296480*	HERBICIDAL COMPOSITIONS COMPRISING 4-AMINO-3,6-DICHLOROPYRIDINE-2-CARBOXYLIC ACID
A 01N 59/00	EP 2296463*	COMPOSITION HAVING BIOCIDE ACTIVITY FOR AQUEOUS PREPARATIONS
A 01N 59/00	EP 2309863*	CONCENTRATE FOR PREPARING A DISINFECTANT AND METHODS FOR ITS PREPARATION AND USE
A 01N 59/08	EP 2296463*	COMPOSITION HAVING BIOCIDE ACTIVITY FOR AQUEOUS PREPARATIONS
A 01N 59/16	EP 2135507	DISINFECTANT
A 01N 59/16	EP 2309863*	CONCENTRATE FOR PREPARING A DISINFECTANT AND METHODS FOR ITS PREPARATION AND USE
A 01N 63/00	EP 2114153*	TREATMENT AND PREVENTION OF NEURODEGENERATIVE DISEASES USING GENE THERAPY
A 01N 65/00	EP 2114153*	TREATMENT AND PREVENTION OF NEURODEGENERATIVE DISEASES USING GENE THERAPY
A 01P 1/00	EP 2296463*	COMPOSITION HAVING BIOCIDE ACTIVITY FOR AQUEOUS PREPARATIONS
A 01P 1/00	EP 2309863*	CONCENTRATE FOR PREPARING A DISINFECTANT AND METHODS FOR ITS PREPARATION AND USE
A 01P 3/00	EP 2135507	DISINFECTANT
A 01P 3/00	EP 2240027*	PLANT HEALTH COMPOSITION
A 01P 3/00	EP 2242366*	PLANT HEALTH COMPOSITION
A 01P 3/00	EP 2306833*	FUNGICIDAL COMPOSITIONS
A 01P 3/00	EP 2306834*	FUNGICIDAL MIXTURES COMPRISING SUBSTITUTED 1-METHYLPYRAZOL-4-YLCARBOXANILIDES
A 01P 3/00	EP 2322037	PESTICIDE COMPOSITION AND FRUIT BAG
A 01P 5/00	EP 2306831*	PESTICIDAL COMPOSITION

(51)	Број објаве европске пријаве патента	(51)
A 01P 7/02	EP 2114144*	FOAMABLE COMPOSITION FOR KILLING ARTHROPODS AND USES THEREOF
A 01P 7/02	EP 2305029	METHOD FOR PRODUCING EXTENDED-RELEASE PREPARATION COMPOSITION
A 01P 7/02	EP 2306831*	PESTICIDAL COMPOSITION
A 01P 7/04	EP 2114144*	FOAMABLE COMPOSITION FOR KILLING ARTHROPODS AND USES THEREOF
A 01P 7/04	EP 2225940	Oil dispersions of nAChR binding neonicotinoids
A 01P 7/04	EP 2240027*	PLANT HEALTH COMPOSITION
A 01P 7/04	EP 2242366*	PLANT HEALTH COMPOSITION
A 01P 7/04	EP 2305029	METHOD FOR PRODUCING EXTENDED-RELEASE PREPARATION COMPOSITION
A 01P 7/04	EP 2306831*	PESTICIDAL COMPOSITION
A 01P 7/04	EP 2322037	PESTICIDE COMPOSITION AND FRUIT BAG
A 01P 9/00	EP 2306831*	PESTICIDAL COMPOSITION
A 01P 13/00	EP 2296480*	HERBICIDAL COMPOSITIONS COMPRISING 4-AMINO-3,6-DICHLOROPYRIDINE-2-CARBOXYLIC ACID
A 01P 13/00	EP 2303022*	SYNERGISTIC HERBICIDAL COMBINATION OF CLOMAZONE AND PETHOXAMID
A 23C 9/00	EP 2308324	Phosphatidylserine enriched milk fractions for the formulation of functional foods
A 23C 9/12	EP 2310404*	TRANSCONJUGANTS OF LACTIC ACID BACTERIA
A 23C 9/127	EP 2117329*	METHOD FOR MODIFYING STRUCTURE OF LOW-ENERGY PRODUCT
A 23C 9/13	EP 2117329*	METHOD FOR MODIFYING STRUCTURE OF LOW-ENERGY PRODUCT
A 23C 9/15	EP 2117329*	METHOD FOR MODIFYING STRUCTURE OF LOW-ENERGY PRODUCT
A 23C 19/045	EP 2293680*	FOOD WITH CHEESE CONTAINED THEREIN
A 23C 19/076	EP 2298080	Method and apparatus for making aerated food product and product obtainable thereby
A 23C 19/09	EP 2293680*	FOOD WITH CHEESE CONTAINED THEREIN
A 23F 3/00	EP 2296496*	GRANULATES FOR THE PREPARATION OF REDUCED-CALORIE INSTANT DRINKS
A 23F 5/00	EP 2296496*	GRANULATES FOR THE PREPARATION OF REDUCED-CALORIE INSTANT DRINKS
A 23G 1/00	EP 2308324	Phosphatidylserine enriched milk fractions for the formulation of functional foods
A 23G 1/10	EP 2298080	Method and apparatus for making aerated food product and product obtainable thereby
A 23G 1/52	EP 2298080	Method and apparatus for making aerated food product and product obtainable thereby
A 23G 3/02	EP 2298080	Method and apparatus for making aerated food product and product obtainable thereby
A 23G 3/52	EP 2298080	Method and apparatus for making aerated food product and product obtainable thereby
A 23G 4/20	EP 2296490*	PROCESS FOR MANUFACTURING CHEWING GUM HAVING A COATING LAYER, AND THE CHEWING GUM OBTAINABLE BY SAID PROCESS
A 23J 1/14	EP 2303919*	NOVEL CANOLA PROTEIN ISOLATE
A 23J 1/14	EP 2309873*	SOLUBLE CANOLA PROTEIN ISOLATE PRODUCTION
A 23J 1/14	EP 2320746*	SOLUBLE CANOLA PROTEIN ISOLATE PRODUCTION FROM PROTEIN MICELLAR MASS
A 23J 1/14	EP 2320747*	PREPARATION OF CANOLA PROTEIN ISOLATE FROM CANOLA OIL SEEDS ("BLENDERTEIN")
A 23J 3/14	EP 2303919*	NOVEL CANOLA PROTEIN ISOLATE
A 23J 3/14	EP 2309873*	SOLUBLE CANOLA PROTEIN ISOLATE PRODUCTION
A 23J 3/14	EP 2320746*	SOLUBLE CANOLA PROTEIN ISOLATE PRODUCTION FROM PROTEIN MICELLAR MASS
A 23J 3/14	EP 2320747*	PREPARATION OF CANOLA PROTEIN ISOLATE FROM CANOLA OIL SEEDS ("BLENDERTEIN")

(51)	Број објаве европске пријаве патента	(51)
A 23J 7/00	EP 2308324	Phosphatidylserine enriched milk fractions for the formulation of functional foods
A 23K 1/14	EP 2320746*	SOLUBLE CANOLA PROTEIN ISOLATE PRODUCTION FROM PROTEIN MICELLAR MASS
A 23K 1/14	EP 2320747*	PREPARATION OF CANOLA PROTEIN ISOLATE FROM CANOLA OIL SEEDS ("BLENDERTEIN")
A 23K 1/16	EP 2269472	Animal feed for improving intestinal barrier properties
A 23K 1/165	EP 2236600	Phytases
A 23K 1/165	EP 2264156	Phytases
A 23K 1/18	EP 2269472	Animal feed for improving intestinal barrier properties
A 23K 1/18	EP 2296495*	A CHOLESTEROL REDUCED MEAT BASED FOOD PRODUCT
A 23L 1/00	EP 1811980*	SEALED, EDIBLE FILM STRIP PACKETS AND METHODS OF MAKING AND USING THEM
A 23L 1/00	EP 2296490*	PROCESS FOR MANUFACTURING CHEWING GUM HAVING A COATING LAYER, AND THE CHEWING GUM OBTAINABLE BY SAID PROCESS
A 23L 1/06	EP 2263476	Fruit preparation
A 23L 1/064	EP 2263476	Fruit preparation
A 23L 1/068	EP 2263476	Fruit preparation
A 23L 1/20	EP 2117329*	METHOD FOR MODIFYING STRUCTURE OF LOW-ENERGY PRODUCT
A 23L 1/212	EP 2263476	Fruit preparation
A 23L 1/236	EP 2296496*	GRANULATES FOR THE PREPARATION OF REDUCED-CALORIE INSTANT DRINKS
A 23L 1/29	EP 2296495*	A CHOLESTEROL REDUCED MEAT BASED FOOD PRODUCT
A 23L 1/29	EP 2296496*	GRANULATES FOR THE PREPARATION OF REDUCED-CALORIE INSTANT DRINKS
A 23L 1/29	EP 2308324	Phosphatidylserine enriched milk fractions for the formulation of functional foods
A 23L 1/29	EP 2313090*	NOVEL SULPHUR CONTAINING LIPIDS FOR USE AS FOOD SUPPLEMENT OR AS MEDICAMENT
A 23L 1/30	EP 2101809*	PHARMACEUTICAL COMPOSITION CONTAINING ARAZYME FOR THE PREVENTION OF LIVER DYSFUNCTION
A 23L 1/304	EP 2298276	Accelerating agent of calcium absorption
A 23L 1/305	EP 2296495*	A CHOLESTEROL REDUCED MEAT BASED FOOD PRODUCT
A 23L 1/305	EP 2309873*	SOLUBLE CANOLA PROTEIN ISOLATE PRODUCTION
A 23L 1/305	EP 2320746*	SOLUBLE CANOLA PROTEIN ISOLATE PRODUCTION FROM PROTEIN MICELLAR MASS
A 23L 1/305	EP 2320747*	PREPARATION OF CANOLA PROTEIN ISOLATE FROM CANOLA OIL SEEDS ("BLENDERTEIN")
A 23L 1/314	EP 2296495*	A CHOLESTEROL REDUCED MEAT BASED FOOD PRODUCT
A 23L 1/317	EP 2296495*	A CHOLESTEROL REDUCED MEAT BASED FOOD PRODUCT
A 23L 2/00	EP 2296496*	GRANULATES FOR THE PREPARATION OF REDUCED-CALORIE INSTANT DRINKS
A 23L 2/00	EP 2308324	Phosphatidylserine enriched milk fractions for the formulation of functional foods
A 23L 2/52	EP 2298276	Accelerating agent of calcium absorption
A 23L 2/56	EP 2296496*	GRANULATES FOR THE PREPARATION OF REDUCED-CALORIE INSTANT DRINKS
A 23L 2/60	EP 2296496*	GRANULATES FOR THE PREPARATION OF REDUCED-CALORIE INSTANT DRINKS
A 23L 2/66	EP 2303919*	NOVEL CANOLA PROTEIN ISOLATE
A 23L 2/66	EP 2309873*	SOLUBLE CANOLA PROTEIN ISOLATE PRODUCTION
A 23L 2/66	EP 2320746*	SOLUBLE CANOLA PROTEIN ISOLATE PRODUCTION FROM PROTEIN MICELLAR MASS

(51)	Број објаве европске пријаве патента	(51)
A 23L 3/3463	EP 2303041*	PERACID AND 2-HYDROXY ORGANIC ACID COMPOSITIONS AND METHODS FOR TREATING PRODUCE
A 23N 7/00	EP 2309218	Recovery of heat from recurring charges of vapour
A 24C 5/56	EP 2317881*	SMOKING ARTICLE WITH TRANSPARENT SECTION
A 24D 1/02	EP 2317881*	SMOKING ARTICLE WITH TRANSPARENT SECTION
A 24D 1/04	EP 2317881*	SMOKING ARTICLE WITH TRANSPARENT SECTION
A 24D 3/04	EP 2299854*	FILTER FOR A SMOKING ARTICLE
A 24D 3/04	EP 2317881*	SMOKING ARTICLE WITH TRANSPARENT SECTION
A 24D 3/06	EP 2317881*	SMOKING ARTICLE WITH TRANSPARENT SECTION
A 24D 3/14	EP 2299854*	FILTER FOR A SMOKING ARTICLE
A 24F 25/02	EP 2311332	DOUBLE-CHAMBER HUMIDIFIER TUBE
A 41D 19/00	EP 2317984*	ARTICLES OF MANUFACTURE RELEASING AN ACTIVE INGREDIENT
A 41G 5/00	EP 2022357	Hair strip for hair extension and thickening
A 43B 7/06	EP 2320762*	INSERT FOR SOLES, PARTICULARLY FOR PERFORATED SOLES MADE OF POLYMERIC MATERIAL COMPRISING A MEMBRANE THAT IS IMPERMEABLE TO WATER AND PERMEABLE TO WATER VAPOR, AND SOLE COMPRISING SAID INSERT
A 43B 7/12	EP 2320762*	INSERT FOR SOLES, PARTICULARLY FOR PERFORATED SOLES MADE OF POLYMERIC MATERIAL COMPRISING A MEMBRANE THAT IS IMPERMEABLE TO WATER AND PERMEABLE TO WATER VAPOR, AND SOLE COMPRISING SAID INSERT
A 43B 13/16	EP 2320762*	INSERT FOR SOLES, PARTICULARLY FOR PERFORATED SOLES MADE OF POLYMERIC MATERIAL COMPRISING A MEMBRANE THAT IS IMPERMEABLE TO WATER AND PERMEABLE TO WATER VAPOR, AND SOLE COMPRISING SAID INSERT
A 44C 5/20	EP 2301374	Kid identification wristband
A 45F 3/04	EP 2303060*	MILITARY PERSONNEL EXIGENCIES AND AMMUNITION CARRIER SYSTEM
A 45F 3/08	EP 2303060*	MILITARY PERSONNEL EXIGENCIES AND AMMUNITION CARRIER SYSTEM
A 47B 81/06	EP 2272399	DEVICE FOR STORING COMPACT DISCS
A 47G 9/00	EP 2227992	Body designed in the style of a textile cover or pacifier
A 47G 9/02	EP 2303071*	DEVICE FOR INCREASING THE STABILITY OF VESSELS, SUCH AS SAUCEPANS, VASES OR SIMILAR
A 47J 31/00	EP 2299878*	ESPRESSO COFFEE MACHINE WITH PREINFUSION DEVICE
A 47J 31/06	EP 2307288*	SYSTEM, METHOD AND CAPSULE FOR PREPARING A BEVERAGE
A 47J 31/06	EP 2310301*	SYSTEM, METHOD AND CAPSULE FOR PREPARING A BEVERAGE
A 47J 31/36	EP 2218367	Perforation device for capsules and machine for preparing beverages incorporating said device
A 47J 31/36	EP 2299878*	ESPRESSO COFFEE MACHINE WITH PREINFUSION DEVICE
A 47J 31/36	EP 2303077*	CAPSULE, SYSTEM AND METHOD FOR PREPARING A PREDETERMINED QUANTITY OF BEVERAGE SUITABLE FOR CONSUMPTION
A 47J 31/36	EP 2306871*	SYSTEM, CAPSULE AND METHOD FOR PREPARING A BEVERAGE
A 47J 31/46	EP 2299878*	ESPRESSO COFFEE MACHINE WITH PREINFUSION DEVICE
A 47J 37/07	EP 2131707*	BARBECUE GRILL
A 47K 3/40	EP 2315544*	FOAM SHOWER BASE ELEMENT
A 47K 7/00	EP 2305086	STACKED SHEET BODY AND SHEET STORING DEVICE
A 47K 7/00	EP 2308773	CONTAINING DEVICE
A 47K 7/00	EP 2308774	PACKAGE BODY

(51)	Број објаве европске пријаве патента	(51)
A 47K 10/16	EP 2305086	STACKED SHEET BODY AND SHEET STORING DEVICE
A 47K 10/20	EP 2305086	STACKED SHEET BODY AND SHEET STORING DEVICE
A 47K 10/42	EP 2305086	STACKED SHEET BODY AND SHEET STORING DEVICE
A 47K 11/02	EP 2303083*	AN INCINERATION SYSTEM AND BURNER FOR A TOILET
A 47L 13/10	EP 2308361	CLEANER AND CLEANING BODY
A 47L 13/20	EP 2308361	CLEANER AND CLEANING BODY
A 61B 1/018	EP 2296528*	METHODS AND DEVICES FOR ACCESSING ANATOMIC STRUCTURES
A 61B 1/018	EP 2296529*	SURGICAL ENDOSCOPE
A 61B 5/00	EP 2315549*	ANALYTE MEASUREMENT AND MANAGEMENT DEVICE AND ASSOCIATED METHODS
A 61B 5/055	EP 2303114*	RADIOPHARMACEUTICAL IMAGING OF NEURODEGENERATIVE DISEASES
A 61B 5/15	EP 2251453	Vessel holder
A 61B 6/03	EP 2303114*	RADIOPHARMACEUTICAL IMAGING OF NEURODEGENERATIVE DISEASES
A 61B 17/00	EP 2296528*	METHODS AND DEVICES FOR ACCESSING ANATOMIC STRUCTURES
A 61B 17/00	EP 2317930*	DEVICE TO CLOSE OPENINGS IN BODY TISSUE
A 61B 17/04	EP 2299913*	DEVICES FOR TENSIONING BARBED SUTURES
A 61B 17/06	EP 2299913*	DEVICES FOR TENSIONING BARBED SUTURES
A 61B 17/06	EP 2300194*	POST LASER DRILLING STRESS RELIEF OF SURGICAL NEEDLES MADE OF REFRACTORY ALLOYS
A 61B 17/128	EP 2313014*	DEVICES AND METHODS FOR PLACING OCCLUSION FASTENERS
A 61B 17/22	EP 2315634*	A MAGNETOSTRICTIVE ACTUATOR OF A MEDICAL ULTRASOUND TRANSDUCER ASSEMBLY, AND A MEDICAL ULTRASOUND HANDPIECE AND A MEDICAL ULTRASOUND SYSTEM HAVING SUCH ACTUATOR
A 61B 17/29	EP 2296528*	METHODS AND DEVICES FOR ACCESSING ANATOMIC STRUCTURES
A 61B 17/30	EP 2296528*	METHODS AND DEVICES FOR ACCESSING ANATOMIC STRUCTURES
A 61B 17/32	EP 2315634*	A MAGNETOSTRICTIVE ACTUATOR OF A MEDICAL ULTRASOUND TRANSDUCER ASSEMBLY, AND A MEDICAL ULTRASOUND HANDPIECE AND A MEDICAL ULTRASOUND SYSTEM HAVING SUCH ACTUATOR
A 61B 17/326	EP 2305146	ANASTOMAT FOR CIRCUMCISION
A 61B 17/34	EP 2296528*	METHODS AND DEVICES FOR ACCESSING ANATOMIC STRUCTURES
A 61B 17/64	EP 2294994	External fixation component
A 61B 17/70	EP 2077782*	ANCHOR ASSEMBLY FOR SPINAL IMPLANT SYSTEM
A 61B 18/14	EP 2206476	Apparatus, systems and methods for achieving intravascular, thermally-induced renal neuromodulation
A 61C 1/08	EP 2129319*	MANUFACTURING METHOD OF A GUIDING TEMPLATE FOR DENTAL IMPLANTOLOGY, GUIDING TEMPLATE MANUFACTURED THEREBY AND REFERENCE DEVICE FOR THE EXECUTION OF SUCH METHOD
A 61C 8/00	EP 2127613	ARTIFICAL TEETHRIDGE AND FANG
A 61C 8/00	EP 2223667	A dental implant, a dental implant kit and a method of connecting a super-structure
A 61C 9/00	EP 2229914	System and method for aligning virtual models
A 61C 13/00	EP 2127613	ARTIFICAL TEETHRIDGE AND FANG
A 61C 13/00	EP 2229914	System and method for aligning virtual models
A 61C 13/01	EP 2306923*	DENTURES, DENTAL ARCHES AND METHODS OF MANUFACTURE
A 61C 13/36	EP 2306923*	DENTURES, DENTAL ARCHES AND METHODS OF MANUFACTURE
A 61C 13/38	EP 2306923*	DENTURES, DENTAL ARCHES AND METHODS OF MANUFACTURE

(51)	Број објаве европске пријаве патента	(51)
A 61C 19/04	EP 2306923*	DENTURES, DENTAL ARCHES AND METHODS OF MANUFACTURE
A 61C 19/05	EP 2229914	System and method for aligning virtual models
A 61F 2/00	EP 2303184*	COMBINATION TREATMENT OF GLAUCOMA
A 61F 2/00	EP 2313026*	ACTIVE DELIVERY SYSTEM FORMULATIONS
A 61F 2/28	EP 2309950*	RESORBABLE MEDICAL IMPLANTS AND RELATED METHODS
A 61F 2/30	EP 2309950*	RESORBABLE MEDICAL IMPLANTS AND RELATED METHODS
A 61F 2/42	EP 2309950*	RESORBABLE MEDICAL IMPLANTS AND RELATED METHODS
A 61F 6/22	EP 2299951*	OCCLUSION DEVICE AND SYSTEM FOR OCCLUDING A REPRODUCTIVE BODY LUMEN
A 61F 7/03	EP 2296595*	PORTABLE MOIST HEAT SYSTEM
A 61F 7/10	EP 2313038*	ARTICLE WITH REFRESHING OR WARMING EFFECT FOR USER
A 61F 9/00	EP 2293912*	SURFACE TREATED IMPLANTABLE ARTICLES AND RELATED METHODS
A 61F 9/007	EP 2293912*	SURFACE TREATED IMPLANTABLE ARTICLES AND RELATED METHODS
A 61F 13/00	EP 2303184*	COMBINATION TREATMENT OF GLAUCOMA
A 61F 13/00	EP 2306972*	ACETIC ACID AND A BUFFER
A 61F 13/10	EP 2313039*	KIT FOR THE TREATMENT OF ONYCHOMYCOSIS
A 61G 17/02	EP 2303214*	EXTERNAL COVERING FOR COFFINS, SARCOPHAGI, CINERARY URNS AND THE LIKE
A 61H 1/00	EP 2101883*	VIBRATION APPARATUS FOR USE ON THERAPY AND EXERCISE EQUIPMENT, AND A METHOD FOR PROVIDING CONTROLLABLE VIBRATION TO SUCH EQUIPMENT
A 61H 3/00	EP 2233120	Walking aid
A 61H 3/04	EP 2233120	Walking aid
A 61H 23/00	EP 2300106*	TRAINING SYSTEM COMPRISING A CYCLING DEVICE
A 61H 23/04	EP 2306958*	DEVICE FOR PNEUMATIC TREATMENT OF AN INFERIOR LIMB HAVING PERIPHERAL ARTERIOPATHY PROBLEMS
A 61J 1/20	EP 2071917*	PACKAGING SYSTEM FOR PHARMACEUTICAL COMPOSITIONS AND KIT FOR INTRAVENOUS ADMINISTRATION
A 61J 3/00	EP 2313050*	A SYSTEM AND METHOD FOR MANUFACTURING A MEDICATION
A 61K 6/00	EP 2296612*	THERAPEUTIC AND PROPHYLACTIC FORMULATION FOR ORAL CARE
A 61K 8/04	EP 2010022873	LIPOSOMAL STRUCTURES FORMING ISOMETRIC AGGLOMERATES, ESPECIALLY BATH BEADS, THE PRODUCTION AND USE THEREOF
A 61K 8/04	EP 2313054*	FOAMING SKINCARE CREAM
A 61K 8/04	EP 2317968*	LIPOSOMAL STRUCTURES FORMING ISOMETRIC AGGLOMERATES, ESPECIALLY BATH BEADS, THE PRODUCTION AND USE THEREOF
A 61K 8/06	EP 2313054*	FOAMING SKINCARE CREAM
A 61K 8/11	EP 2307129*	MICROCAPSULES COMPRISING ACTIVE INGREDIENTS AND A METAL OXIDE SHELL, A METHOD FOR THEIR PREPARATION AND USES THEREOF
A 61K 8/19	EP 2296612*	THERAPEUTIC AND PROPHYLACTIC FORMULATION FOR ORAL CARE
A 61K 8/19	EP 2313054*	FOAMING SKINCARE CREAM
A 61K 8/25	EP 2296612*	THERAPEUTIC AND PROPHYLACTIC FORMULATION FOR ORAL CARE
A 61K 8/37	EP 2218439	Cleansing gel comprising jojoba oil
A 61K 8/39	EP 2218440	Composition including a sucrose ester and a polyglycerol ester
A 61K 8/42	EP 2010022873	LIPOSOMAL STRUCTURES FORMING ISOMETRIC AGGLOMERATES, ESPECIALLY BATH BEADS, THE PRODUCTION AND USE THEREOF

(51)	Број објаве европске пријаве патента	(51)
A 61K 8/42	EP 2317968*	LIPOSOMAL STRUCTURES FORMING ISOMETRIC AGGLOMERATES, ESPECIALLY BATH BEADS, THE PRODUCTION AND USE THEREOF
A 61K 8/49	EP 2307403*	COSMETIC COMPOSITION, COSMETIC TREATMENT METHOD AND 4-OXO-1,4-DIHYDROPYRIMIDIN-2-YL COMPOUNDS
A 61K 8/60	EP 2218440	Composition including a sucrose ester and a polyglycerol ester
A 61K 8/64	EP 2313158*	METHODS AND KITS IMPARTING BENEFITS TO KERATIN-CONTAINING SUBSTRATES
A 61K 8/64	EP 2313159*	COMPOSITION FOR PROVIDING A BENEFIT TO A KERATIN-CONTAINING SUBSTRATE
A 61K 8/64	EP 2318034*	WOUND HEALING
A 61K 8/65	EP 2010022873	LIPOSOMAL STRUCTURES FORMING ISOMETRIC AGGLOMERATES, ESPECIALLY BATH BEADS, THE PRODUCTION AND USE THEREOF
A 61K 8/65	EP 2317968*	LIPOSOMAL STRUCTURES FORMING ISOMETRIC AGGLOMERATES, ESPECIALLY BATH BEADS, THE PRODUCTION AND USE THEREOF
A 61K 8/72	EP 2068819*	DENDRIMER COMPOSITIONS
A 61K 8/72	EP 2306966*	CATIONIC LATEX AS A CARRIER FOR ACTIVE INGREDIENTS AND METHODS FOR MAKING AND USING THE SAME
A 61K 8/73	EP 2010022873	LIPOSOMAL STRUCTURES FORMING ISOMETRIC AGGLOMERATES, ESPECIALLY BATH BEADS, THE PRODUCTION AND USE THEREOF
A 61K 8/73	EP 2317968*	LIPOSOMAL STRUCTURES FORMING ISOMETRIC AGGLOMERATES, ESPECIALLY BATH BEADS, THE PRODUCTION AND USE THEREOF
A 61K 8/81	EP 2313158*	METHODS AND KITS IMPARTING BENEFITS TO KERATIN-CONTAINING SUBSTRATES
A 61K 8/86	EP 2313158*	METHODS AND KITS IMPARTING BENEFITS TO KERATIN-CONTAINING SUBSTRATES
A 61K 8/92	EP 2218439	Cleansing gel comprising jojoba oil
A 61K 8/92	EP 2317984*	ARTICLES OF MANUFACTURE RELEASING AN ACTIVE INGREDIENT
A 61K 9/00	EP 2298276	Accelerating agent of calcium absorption
A 61K 9/00	EP 2299971*	SOLID PHARMACEUTICAL FORMULATIONS COMPRISING BIBW 2992
A 61K 9/00	EP 2305683	Pharmaceutical dosage form comprising oxycodone hydrochloride having less than 25 ppm 14-hydroxycodeinone
A 61K 9/00	EP 2306972*	ACETIC ACID AND A BUFFER
A 61K 9/00	EP 2306999*	COMPOSITIONS FOR TREATING ROSACEA
A 61K 9/00	EP 2315580*	PHARMACEUTICAL FORMULATIONS AND METHODS FOR TREATING RESPIRATORY TRACT INFECTIONS
A 61K 9/00	EP 2317984*	ARTICLES OF MANUFACTURE RELEASING AN ACTIVE INGREDIENT
A 61K 9/00	EP 2320870*	TOPICAL INTRANASAL COMPOSITION USABLE IN THE CASE OF NASAL OBSTRUCTION
A 61K 9/00	EP 2320871*	INTRAVAGINAL DEVICES WITH A RIGID SUPPORT, METHODS OF MAKING, AND USES THEREOF
A 61K 9/00	EP 2322151	Sustained release formulation comprising a GPR119 agonist and a DPP-IV inhibitor
A 61K 9/06	EP 2303227*	CONTROLLED RELEASE CORTICOSTEROID COMPOSITIONS AND METHODS FOR THE TREATMENT OF OTIC DISORDERS
A 61K 9/06	EP 2306975*	CONTROLLED-RELEASE OTIC STRUCTURE MODULATING AND INNATE IMMUNE SYSTEM MODULATING COMPOSITIONS AND METHODS FOR THE TREATMENT OF OTIC DISORDERS
A 61K 9/06	EP 2315581*	TOPICAL COMPOSITION FOR THE TREATMENT OF ACTINIC KERATOSIS

(51)	Број објаве европске пријаве патента	(51)
A 61K 9/08	EP 2298281	Infusion and injection solution of Levodopa
A 61K 9/08	EP 2303229*	CONCENTRATED OXALIPLATIN SOLUTION AND ITS METHOD OF PREPARATION
A 61K 9/08	EP 2306972*	ACETIC ACID AND A BUFFER
A 61K 9/08	EP 2306977*	METHOD AND COMPOSITION FOR TREATING OCULAR HYPERTENSION AND GLAUCOMA
A 61K 9/08	EP 2309983*	PHARMACEUTICAL FORM COMPRISING TETRAHYDROBIOPTERIN
A 61K 9/08	EP 2310053*	PHARMACEUTICAL COMPOSITIONS COMPRISING A COMPLEX OF AMINOCYCLOHEXANE DERIVATIVES AND CYCLODEXTRIN
A 61K 9/10	EP 2299987*	CAPSULE PHARMACEUTICAL DOSAGE FORM COMPRISING A SUSPENSION FORMULATION OF AN INDOLINONE DERIVATIVE
A 61K 9/10	EP 2313087*	PHARMACEUTICAL DOSAGE FORM FOR IMMEDIATE RELEASE OF AN INDOLINONE DERIVATIVE
A 61K 9/107	EP 2313054*	FOAMING SKINCARE CREAM
A 61K 9/107	EP 2313115*	POLYMERIC DELIVERY SYSTEMS FOR ACTIVE AGENTS
A 61K 9/127	EP 2101731*	ENDOXIFEN METHODS AND COMPOSITIONS
A 61K 9/127	EP 2299976*	CONTROLLED RELEASE AURIS SENSORY CELL MODULATOR COMPOSITIONS AND METHODS FOR THE TREATMENT OF OTIC DISORDERS
A 61K 9/14	EP 2299979*	CONTROLLED RELEASE ANTIMICROBIAL COMPOSITIONS AND METHODS FOR THE TREATMENT OF OTIC DISORDERS
A 61K 9/14	EP 2303227*	CONTROLLED RELEASE CORTICOSTEROID COMPOSITIONS AND METHODS FOR THE TREATMENT OF OTIC DISORDERS
A 61K 9/14	EP 2309985*	PHARMACEUTICAL COMPOSITION
A 61K 9/16	EP 2296632*	CONTROLLED-RELEASE APOPTOSIS MODULATING COMPOSITIONS AND METHODS FOR THE TREATMENT OF OTIC DISORDERS
A 61K 9/16	EP 2296635*	ARTIFICIAL OXYGEN CARRIERS AND USE THEREOF
A 61K 9/16	EP 2299971*	SOLID PHARMACEUTICAL FORMULATIONS COMPRISING BIBW 2992
A 61K 9/16	EP 2299976*	CONTROLLED RELEASE AURIS SENSORY CELL MODULATOR COMPOSITIONS AND METHODS FOR THE TREATMENT OF OTIC DISORDERS
A 61K 9/16	EP 2299979*	CONTROLLED RELEASE ANTIMICROBIAL COMPOSITIONS AND METHODS FOR THE TREATMENT OF OTIC DISORDERS
A 61K 9/16	EP 2303227*	CONTROLLED RELEASE CORTICOSTEROID COMPOSITIONS AND METHODS FOR THE TREATMENT OF OTIC DISORDERS
A 61K 9/16	EP 2303233*	SOLID ORAL DOSAGE FORM CONTAINING ANTI-PLATELET AGENT CLOPIDOGREL AND METHOD FOR THE PREPARATION THEREOF
A 61K 9/16	EP 2306975*	CONTROLLED-RELEASE OTIC STRUCTURE MODULATING AND INNATE IMMUNE SYSTEM MODULATING COMPOSITIONS AND METHODS FOR THE TREATMENT OF OTIC DISORDERS
A 61K 9/16	EP 2309985*	PHARMACEUTICAL COMPOSITION
A 61K 9/16	EP 2309989*	DRUG LOADED POLYMERIC NANOPARTICLES AND METHODS OF MAKING AND USING SAME
A 61K 9/16	EP 2309990*	DRUG LOADED POLYMERIC NANOPARTICLES AND METHODS OF MAKING AND USING SAME
A 61K 9/16	EP 2309991*	THERAPEUTIC POLYMERIC NANOPARTICLES COMPRISING VINCA ALKALOIDS AND METHODS OF MAKING AND USING SAME
A 61K 9/16	EP 2317979*	PHARMACEUTICAL COMPOSITIONS OF SOMATOTROPHIC HORMONES

(51)	Број објаве европске пријаве патента	(51)
A 61K 9/16	EP 2317984*	ARTICLES OF MANUFACTURE RELEASING AN ACTIVE INGREDIENT
A 61K 9/16	EP 2319499	Alcohol resistant dosage forms
A 61K 9/16	EP 2320872*	PROCESS FOR PREPARING MICROPARTICLES
A 61K 9/16	EP 2321022*	PROCESS FOR IMPROVING CRYSTALLINITY
A 61K 9/16	EP 2321023*	PROCESS FOR IMPROVING CRYSTALLINITY OF FLUTICASONE PARTICLES
A 61K 9/20	EP 1980272	Orally-disintegrating tablet and manufacturing method thereof
A 61K 9/20	EP 2299971*	SOLID PHARMACEUTICAL FORMULATIONS COMPRISING BIBW 2992
A 61K 9/20	EP 2299983*	STABILIZED ATYPICAL ANTIPSYCHOTIC FORMULATION
A 61K 9/20	EP 2303233*	SOLID ORAL DOSAGE FORM CONTAINING ANTI-PLATELET AGENT CLOPIDOGREL AND METHOD FOR THE PREPARATION THEREOF
A 61K 9/20	EP 2303238*	SOLID DOSAGE FORMULATIONS OF TELCAGEPANT POTASSIUM
A 61K 9/20	EP 2306985*	CONTROLLED RELEASE COMPOSITIONS OF AGENTS THAT REDUCE CIRCULATING LEVELS OF PLATELETS AND METHODS THEREFOR
A 61K 9/20	EP 2308477	Delayed release rasagiline formulation
A 61K 9/20	EP 2309985*	PHARMACEUTICAL COMPOSITION
A 61K 9/20	EP 2309992*	PHARMACEUTICAL COMPOSITION COMPRISING A STATIN
A 61K 9/20	EP 2309994*	SUSTAINED RELEASE PHARMACEUTICAL COMPOSITIONS COMPRISING QUETIAPINE
A 61K 9/20	EP 2319499	Alcohol resistant dosage forms
A 61K 9/22	EP 2299983*	STABILIZED ATYPICAL ANTIPSYCHOTIC FORMULATION
A 61K 9/22	EP 2308494	Tamper resistant dosage forms
A 61K 9/22	EP 2311458	Tamper resistant dosage forms
A 61K 9/22	EP 2311459	Tamper resistant oral pharmaceutical dosage forms comprising an opioid analgesic
A 61K 9/22	EP 2322151	Sustained release formulation comprising a GPR119 agonist and a DPP-IV inhibitor
A 61K 9/26	EP 2303233*	SOLID ORAL DOSAGE FORM CONTAINING ANTI-PLATELET AGENT CLOPIDOGREL AND METHOD FOR THE PREPARATION THEREOF
A 61K 9/26	EP 2303244*	GASTRO-RESISTANT PHARMACEUTICAL ORAL COMPOSITIONS COMPRISING DULOXETINE OR ITS PHARMACEUTICALLY ACCEPTABLE DERIVATIVES
A 61K 9/28	EP 2268270*	IMPROVED FORMULATIONS FOR POORLY PERMEABLE ACTIVE PHARMACEUTICAL INGREDIENTS
A 61K 9/28	EP 2296490*	PROCESS FOR MANUFACTURING CHEWING GUM HAVING A COATING LAYER, AND THE CHEWING GUM OBTAINABLE BY SAID PROCESS
A 61K 9/28	EP 2303233*	SOLID ORAL DOSAGE FORM CONTAINING ANTI-PLATELET AGENT CLOPIDOGREL AND METHOD FOR THE PREPARATION THEREOF
A 61K 9/28	EP 2309992*	PHARMACEUTICAL COMPOSITION COMPRISING A STATIN
A 61K 9/28	EP 2309994*	SUSTAINED RELEASE PHARMACEUTICAL COMPOSITIONS COMPRISING QUETIAPINE
A 61K 9/30	EP 2303244*	GASTRO-RESISTANT PHARMACEUTICAL ORAL COMPOSITIONS COMPRISING DULOXETINE OR ITS PHARMACEUTICALLY ACCEPTABLE DERIVATIVES
A 61K 9/32	EP 2094262*	PHARMACEUTICAL COMPOSITION CONTAINING PHENANTHRENEQUINONE-BASED COMPOUND FOR INTESTINE DELIVERY SYSTEM
A 61K 9/32	EP 2099448*	PHARMACEUTICAL COMPOSITION FOR TREATMENT AND PREVENTION OF RESTENOSIS

(51)	Број објаве европске пријаве патента	(51)
A 61K 9/32	EP 2099449*	PHARMACEUTICAL COMPOSITION FOR THE TREATMENT AND PREVENTION OF DISEASES INVOLVING IMPOTENCE
A 61K 9/32	EP 2101757*	COMPOUND FOR TREATMENT OR PREVENTION OF PROSTATE-RELATED DISEASES AND PHARMACEUTICAL COMPOSITION OF COLON DELIVERY SYSTEM CONTAINING THE SAME
A 61K 9/32	EP 2311459	Tamper resistant oral pharmaceutical dosage forms comprising an opioid analgesic
A 61K 9/46	EP 2306988*	PHARMACEUTICAL FORMULATION FOR TREATING THE UPPER DIGESTIVE TRACT
A 61K 9/46	EP 2317987*	EPROSARTAN COMPOSITIONS
A 61K 9/48	EP 2268270*	IMPROVED FORMULATIONS FOR POORLY PERMEABLE ACTIVE PHARMACEUTICAL INGREDIENTS
A 61K 9/48	EP 2299987*	CAPSULE PHARMACEUTICAL DOSAGE FORM COMPRISING A SUSPENSION FORMULATION OF AN INDOLINONE DERIVATIVE
A 61K 9/48	EP 2303233*	SOLID ORAL DOSAGE FORM CONTAINING ANTI-PLATELET AGENT CLOPIDOGREL AND METHOD FOR THE PREPARATION THEREOF
A 61K 9/48	EP 2309985*	PHARMACEUTICAL COMPOSITION
A 61K 9/48	EP 2313087*	PHARMACEUTICAL DOSAGE FORM FOR IMMEDIATE RELEASE OF AN INDOLINONE DERIVATIVE
A 61K 9/48	EP 2320876*	HYDROXYPROPYL CELLULOSE CAPSULE SHELL
A 61K 9/50	EP 2296635*	ARTIFICIAL OXYGEN CARRIERS AND USE THEREOF
A 61K 9/50	EP 2296636*	POLYELECTROLYTE-ENCAPSULATED GOLD NANOPARTICLES CAPABLE OF CROSSING BLOOD-BRAIN BARRIER
A 61K 9/50	EP 2303244*	GASTRO-RESISTANT PHARMACEUTICAL ORAL COMPOSITIONS COMPRISING DULOXETINE OR ITS PHARMACEUTICALLY ACCEPTABLE DERIVATIVES
A 61K 9/50	EP 2307129*	MICROCAPSULES COMPRISING ACTIVE INGREDIENTS AND A METAL OXIDE SHELL, A METHOD FOR THEIR PREPARATION AND USES THEREOF
A 61K 9/50	EP 2313088*	ORAL PHARMACEUTICAL FORMULATION FOR OMEPRAZOLE COMPRISING A SPECIFIC SEPARATION LAYER
A 61K 9/51	EP 2296635*	ARTIFICIAL OXYGEN CARRIERS AND USE THEREOF
A 61K 9/51	EP 2296636*	POLYELECTROLYTE-ENCAPSULATED GOLD NANOPARTICLES CAPABLE OF CROSSING BLOOD-BRAIN BARRIER
A 61K 9/51	EP 2310000*	DERMAL DELIVERY
A 61K 9/52	EP 2299983*	STABILIZED ATYPICAL ANTIPSYCHOTIC FORMULATION
A 61K 9/52	EP 2322151	Sustained release formulation comprising a GPR119 agonist and a DPP-IV inhibitor
A 61K 9/70	EP 2310001*	TRANSDERMAL ESTROGEN DEVICE AND DELIVERY
A 61K 31/00	EP 1977762	CTGF AS TARGET FOR THE THERAPY OF DIABETIC NEPHROPATHY
A 61K 31/00	EP 2101575*	ACE2 ACTIVATOR COMPOUNDS AND METHODS OF USE THEREOF
A 61K 31/00	EP 2303238*	SOLID DOSAGE FORMULATIONS OF TELCAGEPANT POTASSIUM
A 61K 31/00	EP 2305221	Dna damage repair inhibitors for treatment of cancer
A 61K 31/00	EP 2317991*	USE OF OPIOID ANTAGONISTS FOR TREATING URINARY RETENTION
A 61K 31/00	EP 2322150	Method of identifying GLP-1 secretagogues
A 61K 31/00	EP 2322151	Sustained release formulation comprising a GPR119 agonist and a DPP-IV inhibitor
A 61K 31/00	EP 2322152	Method of preparing a composition comprising a GPR119 agonist

(51)	Број објаве европске пријаве патента	(51)
A 61K 31/00	EP 2322156	Composition for the treatment of diabetes and conditions related thereto and for the treatment of conditions ameliorated by increasing a blood GLP-1 level
A 61K 31/00	EP 2322157	Composition for the treatment of diabetes and conditions related thereto and for the treatment of conditions ameliorated by increasing a blood GLP-1 level
A 61K 31/01	EP 2296639*	EMOLLIENT COMPOSITION FOR THE PREVENTIVE TREATMENT OF ATOPIC DERMATITIS
A 61K 31/045	EP 2135507	DISINFECTANT
A 61K 31/045	EP 2306975*	CONTROLLED-RELEASE OTIC STRUCTURE MODULATING AND INNATE IMMUNE SYSTEM MODULATING COMPOSITIONS AND METHODS FOR THE TREATMENT OF OTIC DISORDERS
A 61K 31/045	EP 2320878*	MONOTERPENES FOR TREATING RESPIRATORY TRACT DISEASES, IN PARTICULAR BRONCHOPULMONARY DISEASES
A 61K 31/047	EP 2296639*	EMOLLIENT COMPOSITION FOR THE PREVENTIVE TREATMENT OF ATOPIC DERMATITIS
A 61K 31/075	EP 2299810*	TOPICAL PHARMACEUTICAL FORMULATIONS CONTAINING A LOW CONCENTRATION OF BENZOYL PEROXIDE IN SUSPENSION IN WATER AND A WATER-MISCIBLE ORGANIC SOLVENT
A 61K 31/10	EP 2307362*	ANTAGONISTS OF PROSTAGLANDIN D2 RECEPTORS
A 61K 31/10	EP 2313090*	NOVEL SULPHUR CONTAINING LIPIDS FOR USE AS FOOD SUPPLEMENT OR AS MEDICAMENT
A 61K 31/122	EP 2196200	Cyclohexenone derivative for treating or preventing hypesthesia or hyperesthesia caused by diabetes
A 61K 31/13	EP 2296640*	METHODS FOR PREVENTING THE DEVELOPMENT OF RETINOPATHY BY THE ORAL ADMINISTRATION OF NNR LIGANDS
A 61K 31/13	EP 2310053*	PHARMACEUTICAL COMPOSITIONS COMPRISING A COMPLEX OF AMINOCYCLOHEXANE DERIVATIVES AND CYCLODEXTRIN
A 61K 31/13	EP 2315586*	1-AMINO-ALKYLCYCLOHEXANE DERIVATIVES FOR THE TREATMENT OF SLEEP DISORDERS
A 61K 31/135	EP 2101570*	TANNATE SALT OF RASAGILINE
A 61K 31/135	EP 2296462*	RASAGILINE FOR PARKINSON'S DISEASE MODIFICATION
A 61K 31/135	EP 2297089*	BENZOCYCLOHEPTANE AND BENZOXEPINE DERIVATIVES
A 61K 31/135	EP 2299992*	PROCESS FOR PREPARING AND DRYING SOLID RASAGILINE BASE
A 61K 31/135	EP 2299993*	PROCESS FOR PURIFYING RASAGILINE BASE
A 61K 31/135	EP 2308477	Delayed release rasagiline formulation
A 61K 31/135	EP 2322162	5HT2C receptor modulator compositions and methods of use
A 61K 31/138	EP 2101731*	ENDOXIFEN METHODS AND COMPOSITIONS
A 61K 31/16	EP 2303270*	ACYLAMINO-SUBSTITUTED FUSED CYCLOPENTANECARBOXYLIC ACID DERIVATIVES AND THEIR USE AS PHARMACEUTICALS
A 61K 31/16	EP 2303832*	NOVEL POLYMORPHIC FORMS OF (4-{[(5-{[(3-CHLOROPHENYL)METHYL]OXY}-2-METHYLPHENYL)CARBONYL]AMINO}-3-METHYLPHENYL)ACETIC ACID
A 61K 31/16	EP 2305642	Bis(thio-hydrazide amide) salts for treatment of cancers
A 61K 31/16	EP 2309852*	NOVEL METHOD
A 61K 31/165	EP 2295050	Use of agomelatine for the preparation of medicaments for the treatment of sleep disorders in depressed patients
A 61K 31/165	EP 2301527	Association of agomelatine with a mood stabilizer, and pharmaceutical compositions comprising them
A 61K 31/165	EP 2308482	Novel use of peptide compounds for treating muscle pain
A 61K 31/167	EP 2303251*	NEW COMBINATION FOR USE IN THE TREATMENT OF INFLAMMATORY DISORDERS

(51)	Број објаве европске пријаве патента	(51)
A 61K 31/167	EP 2307362*	ANTAGONISTS OF PROSTAGLANDIN D2 RECEPTORS
A 61K 31/167	EP 2314567	Inhibitors of the microsomal prostaglandin E2 synthase-1
A 61K 31/18	EP 2310359*	ORGANIC COMPOUNDS
A 61K 31/19	EP 2318355*	1,1'-DIADAMANTYL CARBOXYLIC ACIDS, MEDICAMENTS CONTAINING SUCH COMPOUNDS AND THEIR USE
A 61K 31/191	EP 2135507	DISINFECTANT
A 61K 31/192	EP 2303251*	NEW COMBINATION FOR USE IN THE TREATMENT OF INFLAMMATORY DISORDERS
A 61K 31/194	EP 2135507	DISINFECTANT
A 61K 31/194	EP 2306999*	COMPOSITIONS FOR TREATING ROSACEA
A 61K 31/195	EP 2307351*	NOVEL SALTS OF (4-{[(5-{[(3-CHLOROPHENYL)METHYL]OXY}-2-METHYLPHENYL)CARBONYL]AMINO}-3-METHYLPHENYL)ACETIC ACID
A 61K 31/196	EP 2315581*	TOPICAL COMPOSITION FOR THE TREATMENT OF ACTINIC KERATOSIS
A 61K 31/198	EP 2111105*	METHOD OF DELAYING THE ONSET OF CLINICALLY DEFINITE MULTIPLE SCLEROSIS
A 61K 31/198	EP 2296636*	POLYELECTROLYTE-ENCAPSULATED GOLD NANOPARTICLES CAPABLE OF CROSSING BLOOD-BRAIN BARRIER
A 61K 31/198	EP 2298281	Infusion and injection solution of Levodopa
A 61K 31/20	EP 2306999*	COMPOSITIONS FOR TREATING ROSACEA
A 61K 31/20	EP 2313092*	POLYUNSATURATED FATTY ACIDS FOR IMPROVING VISION
A 61K 31/202	EP 2313092*	POLYUNSATURATED FATTY ACIDS FOR IMPROVING VISION
A 61K 31/205	EP 2307351*	NOVEL SALTS OF (4-{[(5-{[(3-CHLOROPHENYL)METHYL]OXY}-2-METHYLPHENYL)CARBONYL]AMINO}-3-METHYLPHENYL)ACETIC ACID
A 61K 31/215	EP 2321272*	ORGANIC COMPOUNDS
A 61K 31/216	EP 2321278*	PYRIDINYL MODULATORS OF y-SECRETASE
A 61K 31/22	EP 2301527	Association of agomelatine with a mood stabilizer, and pharmaceutical compositions comprising them
A 61K 31/22	EP 2313090*	NOVEL SULPHUR CONTAINING LIPIDS FOR USE AS FOOD SUPPLEMENT OR AS MEDICAMENT
A 61K 31/23	EP 2306999*	COMPOSITIONS FOR TREATING ROSACEA
A 61K 31/27	EP 2293790*	COMBINATION OF A NICOTINIC RECEPTOR PARTIAL AGONIST AND OF AN ACETYLCHOLINESTERASE INHIBITOR, PHARMACEUTICAL COMPOSITION CONTAINING SAME AND USE THEREOF IN THE TREATMENT OF COGNITIVE DISORDERS
A 61K 31/277	EP 2314292	Endoparasiticidal compositions
A 61K 31/282	EP 2303229*	CONCENTRATED OXALIPLATIN SOLUTION AND ITS METHOD OF PREPARATION
A 61K 31/282	EP 2307003*	COMBINATION THERAPY WITH PM00104 AND ANOTHER ANTITUMOR AGENT
A 61K 31/315	EP 2135507	DISINFECTANT
A 61K 31/325	EP 2320886*	GLUCOSYLCERAMIDE SYNTHASE INHIBITION FOR THE TREATMENT OF COLLAPSING GLOMERULOPATHY AND OTHER GLOMERULAR DISEASE
A 61K 31/33	EP 2094262*	PHARMACEUTICAL COMPOSITION CONTAINING PHENANTHRENEQUINONE-BASED COMPOUND FOR INTESTINE DELIVERY SYSTEM
A 61K 31/33	EP 2099448*	PHARMACEUTICAL COMPOSITION FOR TREATMENT AND PREVENTION OF RESTENOSIS
A 61K 31/33	EP 2099449*	PHARMACEUTICAL COMPOSITION FOR THE TREATMENT AND PREVENTION OF DISEASES INVOLVING IMPOTENCE

(51)	Број објаве европске пријаве патента	(51)
A 61K 31/33	EP 2101575*	ACE2 ACTIVATOR COMPOUNDS AND METHODS OF USE THEREOF
A 61K 31/33	EP 2101757*	COMPOUND FOR TREATMENT OR PREVENTION OF PROSTATE-RELATED DISEASES AND PHARMACEUTICAL COMPOSITION OF COLON DELIVERY SYSTEM CONTAINING THE SAME
A 61K 31/33	EP 2307363*	PIPERIDYL ACRYLAMIDE ANTOGONISTS OF CCR2
A 61K 31/33	EP 2318401*	AZAINDOLE INHIBITORS OF IAP
A 61K 31/33	EP 2319868	Immunotherapeutic treatment for inducing the regression of atherosclerotic plaques
A 61K 31/335	EP 2297089*	BENZOCYCLOHEPTANE AND BENZOXEPINE DERIVATIVES
A 61K 31/337	EP 2063895*	COMBINATION DRUG
A 61K 31/337	EP 2307003*	COMBINATION THERAPY WITH PM00104 AND ANOTHER ANTITUMOR AGENT
A 61K 31/337	EP 2309989*	DRUG LOADED POLYMERIC NANOPARTICLES AND METHODS OF MAKING AND USING SAME
A 61K 31/337	EP 2309990*	DRUG LOADED POLYMERIC NANOPARTICLES AND METHODS OF MAKING AND USING SAME
A 61K 31/34	EP 2094262*	PHARMACEUTICAL COMPOSITION CONTAINING PHENANTHRENEQUINONE-BASED COMPOUND FOR INTESTINE DELIVERY SYSTEM
A 61K 31/34	EP 2099448*	PHARMACEUTICAL COMPOSITION FOR TREATMENT AND PREVENTION OF RESTENOSIS
A 61K 31/34	EP 2099449*	PHARMACEUTICAL COMPOSITION FOR THE TREATMENT AND PREVENTION OF DISEASES INVOLVING IMPOTENCE
A 61K 31/34	EP 2101757*	COMPOUND FOR TREATMENT OR PREVENTION OF PROSTATE-RELATED DISEASES AND PHARMACEUTICAL COMPOSITION OF COLON DELIVERY SYSTEM CONTAINING THE SAME
A 61K 31/341	EP 2305641	SULFONAMIDE COMPOUND OR SALT THEREOF
A 61K 31/343	EP 2280702*	USE OF DRONEDARONE OR A PHARMACEUTICALLY ACCEPTABLE SALT THEREOF, FOR THE PREPARATION OF A MEDICAMENT FOR REGULATING THE POTASSIUM LEVEL IN THE BLOOD
A 61K 31/343	EP 2300001*	DRONEDARONE FOR THE PREVENTION OF PERMANENT ATRIAL FIBRILLATION
A 61K 31/343	EP 2303259*	DRONEDARONE FOR THE PREVENTION OF CARDIOVERSION
A 61K 31/343	EP 2308509	INHIBITOR OF ANALGESIC TOLERANCE
A 61K 31/345	EP 2313402*	HETEROCYCLIC UREA DERIVATIVES AND METHODS OF USE THEREOF
A 61K 31/35	EP 2101731*	ENDOXIFEN METHODS AND COMPOSITIONS
A 61K 31/35	EP 2320878*	MONOTERPENES FOR TREATING RESPIRATORY TRACT DISEASES, IN PARTICULAR BRONCHOPULMONARY DISEASES
A 61K 31/352	EP 2101575*	ACE2 ACTIVATOR COMPOUNDS AND METHODS OF USE THEREOF
A 61K 31/353	EP 2094262*	PHARMACEUTICAL COMPOSITION CONTAINING PHENANTHRENEQUINONE-BASED COMPOUND FOR INTESTINE DELIVERY SYSTEM
A 61K 31/353	EP 2099448*	PHARMACEUTICAL COMPOSITION FOR TREATMENT AND PREVENTION OF RESTENOSIS
A 61K 31/353	EP 2099449*	PHARMACEUTICAL COMPOSITION FOR THE TREATMENT AND PREVENTION OF DISEASES INVOLVING IMPOTENCE
A 61K 31/353	EP 2101757*	COMPOUND FOR TREATMENT OR PREVENTION OF PROSTATE-RELATED DISEASES AND PHARMACEUTICAL COMPOSITION OF COLON DELIVERY SYSTEM CONTAINING THE SAME

(51)	Број објаве европске пријаве патента	(51)
A 61K 31/353	EP 2307397*	6-SUBSTITUTED PHENOXYCHROMAN CARBOXYLIC ACID DERIVATIVES
A 61K 31/357	EP 2320886*	GLUCOSYLCERAMIDE SYNTHASE INHIBITION FOR THE TREATMENT OF COLLAPSING GLOMERULOPATHY AND OTHER GLOMERULAR DISEASE
A 61K 31/366	EP 2101575*	ACE2 ACTIVATOR COMPOUNDS AND METHODS OF USE THEREOF
A 61K 31/38	EP 2303270*	ACYLAMINO-SUBSTITUTED FUSED CYCLOPENTANECARBOXYLIC ACID DERIVATIVES AND THEIR USE AS PHARMACEUTICALS
A 61K 31/381	EP 2314567	Inhibitors of the microsomal prostaglandin E2 synthase-1
A 61K 31/381	EP 2319840	AMINOPROPYLIDENE DERIVATIVE
A 61K 31/381	EP 2320890*	INDICATION OF USE OF ERDOSTEINE AS ANTIDOTE IN A LARGE NUMBER OF INTOXICATIONS, ESPECIALLY IN HEAVY METALS LIKE LEAD OR MERCURY, AND PARACETAMOL
A 61K 31/395	EP 2063895*	COMBINATION DRUG
A 61K 31/395	EP 2321325*	ANTITUMORAL MACROLIDES
A 61K 31/396	EP 2320886*	GLUCOSYLCERAMIDE SYNTHASE INHIBITION FOR THE TREATMENT OF COLLAPSING GLOMERULOPATHY AND OTHER GLOMERULAR DISEASE
A 61K 31/397	EP 2125715*	PROCESS FOR THE PREPARATION OF EZETIMIBE AND DERIVATIVES THEREOF
A 61K 31/397	EP 2300422*	AZETIDINES AND CYCLOBUTANES AS HISTAMINE H3 RECEPTOR ANTAGONISTS
A 61K 31/397	EP 2300426*	COMPOUNDS COMPRISING A CYCLOBUTOXY GROUP
A 61K 31/40	EP 2134680*	INHIBITORS OF HISTONE DEACETYLASE
A 61K 31/40	EP 2300426*	COMPOUNDS COMPRISING A CYCLOBUTOXY GROUP
A 61K 31/40	EP 2303262*	DPP-IV INHIBITORS FOR USE IN THE TREATMENT OF NAFLD
A 61K 31/40	EP 2313392*	AZETIDINE POLYSUBSTITUTED COMPOUNDS, PREPARATION THEREOF, AND THERAPEUTIC APPLICATION THEREOF
A 61K 31/40	EP 2313393*	AZETIDINE POLYSUBSTITUTED COMPOUNDS, PREPARATION THEREOF, AND THERAPEUTIC APPLICATION THEREOF
A 61K 31/40	EP 2320886*	GLUCOSYLCERAMIDE SYNTHASE INHIBITION FOR THE TREATMENT OF COLLAPSING GLOMERULOPATHY AND OTHER GLOMERULAR DISEASE
A 61K 31/401	EP 2322150	Method of identifying GLP-1 secretagogues
A 61K 31/401	EP 2322151	Sustained release formulation comprising a GPR119 agonist and a DPP-IV inhibitor
A 61K 31/401	EP 2322152	Method of preparing a composition comprising a GPR119 agonist
A 61K 31/401	EP 2322156	Composition for the treatment of diabetes and conditions related thereto and for the treatment of conditions ameliorated by increasing a blood GLP-1 level
A 61K 31/401	EP 2322157	Composition for the treatment of diabetes and conditions related thereto and for the treatment of conditions ameliorated by increasing a blood GLP-1 level
A 61K 31/4025	EP 2134680*	INHIBITORS OF HISTONE DEACETYLASE
A 61K 31/4025	EP 2303262*	DPP-IV INHIBITORS FOR USE IN THE TREATMENT OF NAFLD
A 61K 31/4025	EP 2318363*	HETEROCYCLIC DERIVATIVES AS IAP BINDING COMPOUNDS
A 61K 31/4025	EP 2318395*	INHIBITORS OF IAP
A 61K 31/4025	EP 2319840	AMINOPROPYLIDENE DERIVATIVE
A 61K 31/4025	EP 2320886*	GLUCOSYLCERAMIDE SYNTHASE INHIBITION FOR THE TREATMENT OF COLLAPSING GLOMERULOPATHY AND OTHER GLOMERULAR DISEASE
A 61K 31/403	EP 2133333	New azabicyclic derivatives, method of preparing same and pharmaceutical compositions containing them

(51)	Број објаве европске пријаве патента	(51)
A 61K 31/403	EP 2300425*	CYCLOALKANE[B]INDOLE ANGTAGONISTS OF PROSTAGLANDIN D2 RECEPTORS
A 61K 31/403	EP 2303262*	DPP-IV INHIBITORS FOR USE IN THE TREATMENT OF NAFLD
A 61K 31/403	EP 2320886*	GLUCOSYLCERAMIDE SYNTHASE INHIBITION FOR THE TREATMENT OF COLLAPSING GLOMERULOPATHY AND OTHER GLOMERULAR DISEASE
A 61K 31/4035	EP 2307364*	ISOINDOLONE DERIVATIVES AS MEK KINASE INHIBITORS AND METHODS OF USE
A 61K 31/404	EP 2061758*	SUBSTITUTED 2-INDOLINONE AS PTK INHIBITORS CONTAINING A ZINC BINDING MOIETY
A 61K 31/404	EP 2265582*	NOVEL 3-AMINOALKYL-1,3-DIHYDRO-2H-INDOL-2-ONE DERIVATIVES, PREPARATION THEREOF AND THERAPEUTIC USE THEREOF.
A 61K 31/404	EP 2299987*	CAPSULE PHARMACEUTICAL DOSAGE FORM COMPRISING A SUSPENSION FORMULATION OF AN INDOLINONE DERIVATIVE
A 61K 31/404	EP 2300423*	SUBSTITUTED 7-SULFANYLMETHYL, 7-SULFINYLMETHYL AND 7-SULFONYLMETHYL INDOLES AND USE THEREOF
A 61K 31/404	EP 2308870	2-oxo-1-pyrrolidine deriatives, processes for preparing them and their uses
A 61K 31/404	EP 2313087*	PHARMACEUTICAL DOSAGE FORM FOR IMMEDIATE RELEASE OF AN INDOLINONE DERIVATIVE
A 61K 31/404	EP 2315751*	ALKYNYL ALCOHOLS AS KINASE INHIBITORS
A 61K 31/4045	EP 2298297	Combination of an inhibitor of the If current of the sinus node and an inhibitor of the angiotensin converting enzyme
A 61K 31/407	EP 2297167*	SELENOPHENE AND SELENAZOLE CARBOXYLIC ACID DERIVATIVES
A 61K 31/41	EP 2296475*	TRIAZOLOPYRIDINE JAK INHIBITOR COMPOUNDS AND METHODS
A 61K 31/41	EP 2297167*	SELENOPHENE AND SELENAZOLE CARBOXYLIC ACID DERIVATIVES
A 61K 31/415	EP 2124563*	BENZIMIDAZOLE TRPV1 INHIBITORS
A 61K 31/415	EP 2300004*	COMPOSITIONS AND METHODS RELATING TO HEAT SHOCK TRANSCRIPTION FACTOR ACTIVATING COMPOUNDS AND TARGETS THEREOF
A 61K 31/415	EP 2322150	Method of identifying GLP-1 secretagogues
A 61K 31/415	EP 2322151	Sustained release formulation comprising a GPR119 agonist and a DPP-IV inhibitor
A 61K 31/415	EP 2322152	Method of preparing a composition comprising a GPR119 agonist
A 61K 31/415	EP 2322156	Composition for the treatment of diabetes and conditions related thereto and for the treatment of conditions ameliorated by increasing a blood GLP-1 level
A 61K 31/415	EP 2322157	Composition for the treatment of diabetes and conditions related thereto and for the treatment of conditions ameliorated by increasing a blood GLP-1 level
A 61K 31/4155	EP 2118067*	NICOTINIC ACETYLCHOLINE RECEPTOR MODULATORS
A 61K 31/4155	EP 2300004*	COMPOSITIONS AND METHODS RELATING TO HEAT SHOCK TRANSCRIPTION FACTOR ACTIVATING COMPOUNDS AND TARGETS THEREOF
A 61K 31/4155	EP 2320886*	GLUCOSYLCERAMIDE SYNTHASE INHIBITION FOR THE TREATMENT OF COLLAPSING GLOMERULOPATHY AND OTHER GLOMERULAR DISEASE
A 61K 31/4155	EP 2321301*	NEW HETEROCYCLIC CARBOXAMIDES FOR USE AS THROMBIN INHIBITORS
A 61K 31/416	EP 2141150	BICYCLIC COMPOUND AND PHARMACEUTICAL USE THEREOF
A 61K 31/4178	EP 2317987*	EPROSARTAN COMPOSITIONS

(51)	Број објаве европске пријаве патента	(51)
A 61K 31/4178	EP 2320886*	GLUCOSYLCERAMIDE SYNTHASE INHIBITION FOR THE TREATMENT OF COLLAPSING GLOMERULOPATHY AND OTHER GLOMERULAR DISEASE
A 61K 31/4184	EP 2315763*	BENZIMIDAZOLES AND RELATED ANALOGS AS SIRTUIN MODULATORS
A 61K 31/4192	EP 2308870	2-oxo-1-pyrrolidine deriatives, processes for preparing them and their uses
A 61K 31/4192	EP 2310389*	HETEROCYCLES AS PROTEIN KINASE INHIBITORS
A 61K 31/4192	EP 2320886*	GLUCOSYLCERAMIDE SYNTHASE INHIBITION FOR THE TREATMENT OF COLLAPSING GLOMERULOPATHY AND OTHER GLOMERULAR DISEASE
A 61K 31/4196	EP 2295416	Triazole compounds that modulate HSP90 activity
A 61K 31/4196	EP 2298747	TRIAZOLE DERIVATIVE OR SALT THEREOF
A 61K 31/4196	EP 2298748	Triazole compounds that modulate HSP90 activity
A 61K 31/4196	EP 2300443*	TRIAZOLE DERIVATIVES USEFUL FOR THE TREATMENT OF DISEASES
A 61K 31/4196	EP 2308870	2-oxo-1-pyrrolidine deriatives, processes for preparing them and their uses
A 61K 31/4196	EP 2313399*	THIOPHENE OR THIAZOLE DERIVATIVES AND THEIR USE AS PI3K INHIBITORS
A 61K 31/4196	EP 2322150	Method of identifying GLP-1 secretagogues
A 61K 31/4196	EP 2322151	Sustained release formulation comprising a GPR119 agonist and a DPP-IV inhibitor
A 61K 31/4196	EP 2322152	Method of preparing a composition comprising a GPR119 agonist
A 61K 31/4196	EP 2322156	Composition for the treatment of diabetes and conditions related thereto and for the treatment of conditions ameliorated by increasing a blood GLP-1 level
A 61K 31/4196	EP 2322157	Composition for the treatment of diabetes and conditions related thereto and for the treatment of conditions ameliorated by increasing a blood GLP-1 level
A 61K 31/42	EP 2298747	TRIAZOLE DERIVATIVE OR SALT THEREOF
A 61K 31/421	EP 2321287*	4,5-DIHYDRO-OXAZOL-2-YL DERIVATIVES
A 61K 31/422	EP 2298747	TRIAZOLE DERIVATIVE OR SALT THEREOF
A 61K 31/422	EP 2303872*	ISOXAZOLE DERIVATIVES AND THEIR USE AS METABOTROPIC GLUTAMATE RECEPTOR POTENTIATORS
A 61K 31/422	EP 2321287*	4,5-DIHYDRO-OXAZOL-2-YL DERIVATIVES
A 61K 31/422	EP 2321301*	NEW HETEROCYCLIC CARBOXAMIDES FOR USE AS THROMBIN INHIBITORS
A 61K 31/423	EP 2303850*	NOVEL POTASSIUM CHANNEL BLOCKERS AND USES THEREOF
A 61K 31/4245	EP 2298747	TRIAZOLE DERIVATIVE OR SALT THEREOF
A 61K 31/4245	EP 2310385*	SOLID PHARMACEUTICAL COMPOSITION
A 61K 31/4245	EP 2315756*	1,2,5-OXADIAZOLES AS INHIBITORS OF INDOLEAMINE 2,3-DIOXYGENASE
A 61K 31/4245	EP 2320886*	GLUCOSYLCERAMIDE SYNTHASE INHIBITION FOR THE TREATMENT OF COLLAPSING GLOMERULOPATHY AND OTHER GLOMERULAR DISEASE
A 61K 31/425	EP 2313382*	5-(4-METHANESULFONYL-PHENYL)-THIAZOLE DERIVATIVES FOR THE TREATMENT OF ACUTE AND CHRONIC INFLAMMATORY DISEASES
A 61K 31/425	EP 2320738*	SUBSTITUTED AMINOTHIAZOLE DERIVATIVES, PHARMACEUTICAL COMPOSITIONS, AND METHODS OF USE
A 61K 31/426	EP 2300004*	COMPOSITIONS AND METHODS RELATING TO HEAT SHOCK TRANSCRIPTION FACTOR ACTIVATING COMPOUNDS AND TARGETS THEREOF
A 61K 31/426	EP 2305641	SULFONAMIDE COMPOUND OR SALT THEREOF
A 61K 31/426	EP 2310010*	CHEMICAL COMPOUNDS 251
A 61K 31/427	EP 2298747	TRIAZOLE DERIVATIVE OR SALT THEREOF
A 61K 31/427	EP 2305641	SULFONAMIDE COMPOUND OR SALT THEREOF

(51)	Број објаве европске пријаве патента	(51)
A 61K 31/427	EP 2308509	INHIBITOR OF ANALGESIC TOLERANCE
A 61K 31/427	EP 2310010*	CHEMICAL COMPOUNDS 251
A 61K 31/427	EP 2313399*	THIOPHENE OR THIAZOLE DERIVATIVES AND THEIR USE AS PI3K INHIBITORS
A 61K 31/427	EP 2320886*	GLUCOSYLCERAMIDE SYNTHASE INHIBITION FOR THE TREATMENT OF COLLAPSING GLOMERULOPATHY AND OTHER GLOMERULAR DISEASE
A 61K 31/427	EP 2322223	THERAPEUTIC AGENT FOR MIGRAINE
A 61K 31/428	EP 2141150	BICYCLIC COMPOUND AND PHARMACEUTICAL USE THEREOF
A 61K 31/428	EP 2310366*	NOVEL TRIAZOLO(4,3-A)PYRIDINE DERIVATIVES, PROCESS FOR THE PREPARATION THEREOF, USE THEREOF AS MEDICAMENTS, PHARMACEUTICAL COMPOSITIONS AND NOVEL USE, IN PARTICULAR AS MET INHIBITORS
A 61K 31/428	EP 2320886*	GLUCOSYLCERAMIDE SYNTHASE INHIBITION FOR THE TREATMENT OF COLLAPSING GLOMERULOPATHY AND OTHER GLOMERULAR DISEASE
A 61K 31/431	EP 2308870	2-oxo-1-pyrrolidine deriatives, processes for preparing them and their uses
A 61K 31/433	EP 2141150	BICYCLIC COMPOUND AND PHARMACEUTICAL USE THEREOF
A 61K 31/435	EP 2059508*	5,6-BISARYL-2-PYRIDINE-CARBOXAMIDE DERIVATIVES, PREPARATION AND APPLICATION THEREOF IN THERAPEUTICS AS UROTENSIN II RECEPTOR ANTAGONISTS
A 61K 31/435	EP 2074108*	RENIN INHIBITORS
A 61K 31/435	EP 2300426*	COMPOUNDS COMPRISING A CYCLOBUTOXY GROUP
A 61K 31/435	EP 2315601*	COMBINATION OF A C-MET ANTAGONIST AND AN AMINOHETEROARYL COMPOUND FOR THE TREATMENT OF CANCER
A 61K 31/4353	EP 2300469*	FUSED NITROGEN CONTAINING HETEROCYCLES AND COMPOSITIONS THEREOF AS KINASE INHIBITORS
A 61K 31/4355	EP 2316832	Cyclopamine analogues and methods of use thereof
A 61K 31/4355	EP 2316833	Process for the preparation of Cyclopamine analogue compounds
A 61K 31/436	EP 2307003*	COMBINATION THERAPY WITH PM00104 AND ANOTHER ANTITUMOR AGENT
A 61K 31/4365	EP 2303233*	SOLID ORAL DOSAGE FORM CONTAINING ANTI-PLATELET AGENT CLOPIDOGREL AND METHOD FOR THE PREPARATION THEREOF
A 61K 31/437	EP 2141150	BICYCLIC COMPOUND AND PHARMACEUTICAL USE THEREOF
A 61K 31/437	EP 2293793*	2,5-DISUBSTITUTED IMIDAZO[4,5-C]PYRIDINES FOR TREATING MUSCULAR DYSTROPHY
A 61K 31/437	EP 2294068*	1,3-DIHYDRO-2H-PYRROLO[3,2-B]PYRIDIN-2-ONE DERIVATIVES, PREPARATION THEREOF AND THERAPEUTIC USES THEREOF
A 61K 31/437	EP 2296650*	IMMUNOMODULATION BY IAP INHIBITORS
A 61K 31/437	EP 2297144*	IMIDAZOPYRIDINE AND RELATED ANALOGS AS SIRTUIN MODULATORS
A 61K 31/437	EP 2300465*	IMIDAZOPYRIDINE DERIVATIVES AS INHIBITORS OF RECEPTOR TYROSINE KINASES
A 61K 31/437	EP 2300472*	GLUCOCORTICOID MIMETICS, METHODS OF MAKING THEM, PHARMACEUTICAL COMPOSITIONS, AND USES THEREOF
A 61K 31/437	EP 2300475*	DIAZACARBAZOLES AND METHODS OF USE
A 61K 31/437	EP 2303268*	PHARMACEUTICAL COMPOSITIONS BASED ON KININ B2 RECEPTOR ANTAGONISTS AND CORTICOSTEROIDS, AND THEIR USE
A 61K 31/437	EP 2303882*	AZACARBOLINE DERIVATIVES, PREPARATION METHOD THEREOF AND THERAPEUTIC USE OF SAME

(51)	Број објаве европске пријаве патента	(51)
A 61K 31/437	EP 2307409*	PYRROLOPYRIDINES AS KINASE INHIBITORS
A 61K 31/437	EP 2308870	2-oxo-1-pyrrolidine deriatives, processes for preparing them and their uses
A 61K 31/437	EP 2310366*	NOVEL TRIAZOLO(4,3-A)PYRIDINE DERIVATIVES, PROCESS FOR THE PREPARATION THEREOF, USE THEREOF AS MEDICAMENTS, PHARMACEUTICAL COMPOSITIONS AND NOVEL USE, IN PARTICULAR AS MET INHIBITORS
A 61K 31/437	EP 2310373*	BICYCLIC HETEROCYCLES AS MEK KINASE INHIBITORS
A 61K 31/437	EP 2313407*	cMET INHIBITORS
A 61K 31/437	EP 2313412*	NOVEL DERIVATIVES OF PYRROLOINDOLE INHIBITORS OF HSP90, COMPOSITIONS CONTAINING SAME, AND USE THEREOF
A 61K 31/437	EP 2315763*	BENZIMIDAZOLES AND RELATED ANALOGS AS SIRTUIN MODULATORS
A 61K 31/437	EP 2318382*	NOVEL IMIDAZO[1,2-A]PYRIDINE DERIVATIVES, METHOD FOR THE PREPARATION THEREOF, USE THEREOF AS MEDICAMENTS, PHARMACEUTICAL COMPOSITIONS AND NOVEL USE IN PARTICULAR AS MET INHIBITORS
A 61K 31/437	EP 2320895*	CDK MODULATORS
A 61K 31/4375	EP 2189461	Crystalline irinotecan hydrochloride and methods for the preparation thereof
A 61K 31/4375	EP 2303262*	DPP-IV INHIBITORS FOR USE IN THE TREATMENT OF NAFLD
A 61K 31/4375	EP 2307401*	ANTINEOPLASTIC DERIVATIVES OF 4-OXO-1,4-DIHYDRO-QUINOLINE, PREPARATION THEREOF, AND THERAPEUTIC USE THEREOF
A 61K 31/438	EP 2316832	Cyclopamine analogues and methods of use thereof
A 61K 31/438	EP 2316833	Process for the preparation of Cyclopamine analogue compounds
A 61K 31/438	EP 2318363*	HETEROCYCLIC DERIVATIVES AS IAP BINDING COMPOUNDS
A 61K 31/439	EP 2296640*	METHODS FOR PREVENTING THE DEVELOPMENT OF RETINOPATHY BY THE ORAL ADMINISTRATION OF NNR LIGANDS
A 61K 31/439	EP 2297147*	AZABICYCLIC COMPOUNDS, PREPARATION THEREOF AND USE OF SAME AS DRUGS, ESPECIALLY BETA-LACTAMASE INHIBITORS
A 61K 31/439	EP 2300464*	QUINUCLIDINE DERIVATIVES AS MUSCARINIC M3 RECEPTOR ANTAGONISTS
A 61K 31/439	EP 2310387*	A PROCESS FOR THE PREPARATION OF SOLIFENACIN SALTS AND THEIR INCLUSION INTO PHARMACEUTICAL DOSAGE FORMS
A 61K 31/439	EP 2313404*	QUINUCLIDINE CARBONATE DERIVATIVES AND MEDICINAL COMPOSITION THEREOF
A 61K 31/44	EP 2009153496	PPAR AGONIST COMPOUNDS AND PREPARATION AND USES THEREOF FOR TREATING DIABETES AND/OR DYSLIPIDEMIA
A 61K 31/44	EP 2300428*	AMINOPYRIDINE DERIVATIVES
A 61K 31/44	EP 2300452*	5-[5-[2-(3,5-BIS(TRIFLUOROMETHYL)PHENYL)-2-METHYLPROPANOYLMETHYLAMINO]-4-(4-FLUORO-2-METHYLPHENYL)]-2-PYRIDINYL-2-ALKYL-PROLINAMIDE AS NK1 RECEPTOR ANTAGONISTS
A 61K 31/44	EP 2310371*	PPAR AGONIST COMPOUNDS AND PREPARATION AND USES THEREOF FOR TREATING DIABETES AND/OR DYSLIPIDEMIA
A 61K 31/44	EP 2314567	Inhibitors of the microsomal prostaglandin E2 synthase-1
A 61K 31/44	EP 2318001*	MODIFIED RELEASE FORMULATION AND METHODS OF USE

(51)	Број објаве европске пријаве патента	(51)
A 61K 31/4402	EP 2303270*	ACYLAMINO-SUBSTITUTED FUSED CYCLOPENTANECARBOXYLIC ACID DERIVATIVES AND THEIR USE AS PHARMACEUTICALS
A 61K 31/4402	EP 2305641	SULFONAMIDE COMPOUND OR SALT THEREOF
A 61K 31/4402	EP 2307367*	NOVEL INHIBITORS OF PROLIFERATION AND ACTIVATION OF SIGNAL TRANSDUCER AND ACTIVATOR OF TRANSCRIPTION (STATS)
A 61K 31/4406	EP 2305641	SULFONAMIDE COMPOUND OR SALT THEREOF
A 61K 31/4409	EP 2297133*	1, 2 DISUBSTITUTED HETEROCYCLIC COMPOUNDS
A 61K 31/4409	EP 2303863*	5- AND 6-MEMBERED HETEROCYCLIC COMPOUNDS
A 61K 31/4412	EP 2119706	PYRIDINE OR PYRIMIDINE DERIVATIVE HAVING EXCELLENT CELL GROWTH INHIBITION EFFECT AND EXCELLENT ANTI-TUMOR EFFECT ON CELL STRAIN HAVING AMPLIFICATION OF HGFR GENE
A 61K 31/4412	EP 2308491	Pirfenidone therapy and inducers of cytochrome P450
A 61K 31/4412	EP 2310356*	ADAMANTYL DIAMIDE DERIVATIVES AND USES OF SAME
A 61K 31/4412	EP 2310382*	AMIDOPHENOXYINDAZOLES USEFUL AS INHIBITORS OF C-MET
A 61K 31/4422	EP 2303842*	A PROCESS FOR PRODUCING LERCANIDIPINE HC1 FORM V
A 61K 31/4427	EP 2119706	PYRIDINE OR PYRIMIDINE DERIVATIVE HAVING EXCELLENT CELL GROWTH INHIBITION EFFECT AND EXCELLENT ANTI-TUMOR EFFECT ON CELL STRAIN HAVING AMPLIFICATION OF HGFR GENE
A 61K 31/4427	EP 2297131*	DI-SUBSTITUTED PHENYL COMPOUNDS AS PHOSPHODIESTERASE 10 INHIBITORS
A 61K 31/443	EP 2009153496	PPAR AGONIST COMPOUNDS AND PREPARATION AND USES THEREOF FOR TREATING DIABETES AND/OR DYSLIPIDEMIA
A 61K 31/443	EP 2305641	SULFONAMIDE COMPOUND OR SALT THEREOF
A 61K 31/443	EP 2310371*	PPAR AGONIST COMPOUNDS AND PREPARATION AND USES THEREOF FOR TREATING DIABETES AND/OR DYSLIPIDEMIA
A 61K 31/4433	EP 2320886*	GLUCOSYLCERAMIDE SYNTHASE INHIBITION FOR THE TREATMENT OF COLLAPSING GLOMERULOPATHY AND OTHER GLOMERULAR DISEASE
A 61K 31/4436	EP 2300428*	AMINOPYRIDINE DERIVATIVES
A 61K 31/4436	EP 2300484*	NOVEL CLASS OF SPIRO PIPERIDINES FOR THE TREATMENT OF NEURODEGENERATIVE DISEASES
A 61K 31/4439	EP 2134680*	INHIBITORS OF HISTONE DEACETYLASE
A 61K 31/4439	EP 2298747	TRIAZOLE DERIVATIVE OR SALT THEREOF
A 61K 31/4439	EP 2300428*	AMINOPYRIDINE DERIVATIVES
A 61K 31/4439	EP 2300457*	SUBSTITUTED PYRROLES AND METHODS OF USE
A 61K 31/4439	EP 2303262*	DPP-IV INHIBITORS FOR USE IN THE TREATMENT OF NAFLD
A 61K 31/4439	EP 2303289*	MONO (IRON HYDROXYPYRONE) AND COMBINATION (IRON HYDROXYPYRONE AND GI INFLAMMATION INHIBITING AGENTS) COMPOSITIONS FOR ANAEMIA OR H. PYLORI INFECTIONS
A 61K 31/4439	EP 2303850*	NOVEL POTASSIUM CHANNEL BLOCKERS AND USES THEREOF
A 61K 31/4439	EP 2303861*	PYRIDINE COMPOUNDS
A 61K 31/4439	EP 2303866*	CRYSTALLINE FORMS OF RABEPRAZOLE SODIUM
A 61K 31/4439	EP 2305641	SULFONAMIDE COMPOUND OR SALT THEREOF
A 61K 31/4439	EP 2305672	SULFUR-CONTAINING HETEROCYCLIC DERIVATIVE HAVING ß-SECRETASE-INHIBITING ACTIVITY
A 61K 31/4439	EP 2308509	INHIBITOR OF ANALGESIC TOLERANCE
A 61K 31/4439	EP 2313088*	ORAL PHARMACEUTICAL FORMULATION FOR OMEPRAZOLE COMPRISING A SPECIFIC SEPARATION LAYER

(51)	Број објаве европске пријаве патента	(51)
A 61K 31/4439	EP 2318363*	HETEROCYCLIC DERIVATIVES AS IAP BINDING COMPOUNDS
A 61K 31/4439	EP 2320886*	GLUCOSYLCERAMIDE SYNTHASE INHIBITION FOR THE TREATMENT OF COLLAPSING GLOMERULOPATHY AND OTHER GLOMERULAR DISEASE
A 61K 31/444	EP 2009153496	PPAR AGONIST COMPOUNDS AND PREPARATION AND USES THEREOF FOR TREATING DIABETES AND/OR DYSLIPIDEMIA
A 61K 31/444	EP 2300428*	AMINOPYRIDINE DERIVATIVES
A 61K 31/444	EP 2300465*	IMIDAZOPYRIDINE DERIVATIVES AS INHIBITORS OF RECEPTOR TYROSINE KINASES
A 61K 31/444	EP 2310356*	ADAMANTYL DIAMIDE DERIVATIVES AND USES OF SAME
A 61K 31/444	EP 2310371*	PPAR AGONIST COMPOUNDS AND PREPARATION AND USES THEREOF FOR TREATING DIABETES AND/OR DYSLIPIDEMIA
A 61K 31/444	EP 2318390*	PYRROLE COMPOUNDS
A 61K 31/445	EP 2293790*	COMBINATION OF A NICOTINIC RECEPTOR PARTIAL AGONIST AND OF AN ACETYLCHOLINESTERASE INHIBITOR, PHARMACEUTICAL COMPOSITION CONTAINING SAME AND USE THEREOF IN THE TREATMENT OF COGNITIVE DISORDERS
A 61K 31/445	EP 2300426*	COMPOUNDS COMPRISING A CYCLOBUTOXY GROUP
A 61K 31/445	EP 2310392*	TRICYCLIC ANTAGONISTS OF PROSTAGLANDIN D2 RECEPTORS
A 61K 31/445	EP 2314567	Inhibitors of the microsomal prostaglandin E2 synthase-1
A 61K 31/4453	EP 2300426*	COMPOUNDS COMPRISING A CYCLOBUTOXY GROUP
A 61K 31/4458	EP 2321272*	ORGANIC COMPOUNDS
A 61K 31/45	EP 2301543	A PHARMACEUTICAL COMPOSITION FOR TREATING DIABETES
A 61K 31/453	EP 2094262*	PHARMACEUTICAL COMPOSITION CONTAINING PHENANTHRENEQUINONE-BASED COMPOUND FOR INTESTINE DELIVERY SYSTEM
A 61K 31/453	EP 2099448*	PHARMACEUTICAL COMPOSITION FOR TREATMENT AND PREVENTION OF RESTENOSIS
A 61K 31/453	EP 2099449*	PHARMACEUTICAL COMPOSITION FOR THE TREATMENT AND PREVENTION OF DISEASES INVOLVING IMPOTENCE
A 61K 31/453	EP 2101757*	COMPOUND FOR TREATMENT OR PREVENTION OF PROSTATE-RELATED DISEASES AND PHARMACEUTICAL COMPOSITION OF COLON DELIVERY SYSTEM CONTAINING THE SAME
A 61K 31/453	EP 2320886*	GLUCOSYLCERAMIDE SYNTHASE INHIBITION FOR THE TREATMENT OF COLLAPSING GLOMERULOPATHY AND OTHER GLOMERULAR DISEASE
A 61K 31/4535	EP 2319840	AMINOPROPYLIDENE DERIVATIVE
A 61K 31/454	EP 2298764	4-Oxadiazolyl-piperidine compounds and use thereof
A 61K 31/454	EP 2298765	4-Oxadiazolyl-piperidine compounds and use thereof
A 61K 31/454	EP 2300443*	TRIAZOLE DERIVATIVES USEFUL FOR THE TREATMENT OF DISEASES
A 61K 31/454	EP 2303850*	NOVEL POTASSIUM CHANNEL BLOCKERS AND USES THEREOF
A 61K 31/454	EP 2318363*	HETEROCYCLIC DERIVATIVES AS IAP BINDING COMPOUNDS
A 61K 31/4545	EP 2296640*	METHODS FOR PREVENTING THE DEVELOPMENT OF RETINOPATHY BY THE ORAL ADMINISTRATION OF NNR LIGANDS
A 61K 31/4545	EP 2300465*	IMIDAZOPYRIDINE DERIVATIVES AS INHIBITORS OF RECEPTOR TYROSINE KINASES
A 61K 31/4545	EP 2308869	AZOLE COMPOUND
A 61K 31/4545	EP 2311810	AMIDINE DERIVATIVE

(51)	Број објаве европске пријаве патента	(51)
A 61K 31/455	EP 2296663*	COMBINATIONS COMPRISING METHOTREXATE AND DHODH INHIBITORS
A 61K 31/47	EP 2297131*	DI-SUBSTITUTED PHENYL COMPOUNDS AS PHOSPHODIESTERASE 10 INHIBITORS
A 61K 31/47	EP 2303863*	5- AND 6-MEMBERED HETEROCYCLIC COMPOUNDS
A 61K 31/4709	EP 2300428*	AMINOPYRIDINE DERIVATIVES
A 61K 31/4709	EP 2300443*	TRIAZOLE DERIVATIVES USEFUL FOR THE TREATMENT OF DISEASES
A 61K 31/4709	EP 2300463*	HETEROCYCLIC UREA DERIVATIVES FOR THE TREATMENT OF BACTERIAL INFECTIONS
A 61K 31/4709	EP 2303268*	PHARMACEUTICAL COMPOSITIONS BASED ON KININ B2 RECEPTOR ANTAGONISTS AND CORTICOSTEROIDS, AND THEIR USE
A 61K 31/4709	EP 2307400*	INHIBITORS OF PI3 KINASE
A 61K 31/4709	EP 2307401*	ANTINEOPLASTIC DERIVATIVES OF 4-OXO-1,4-DIHYDRO-QUINOLINE, PREPARATION THEREOF, AND THERAPEUTIC USE THEREOF
A 61K 31/472	EP 2303845*	BI-AND POLYCYCLIC SUBSTITUTED ISOQUINOLINE AND ISOQUINOLINE DERIVATIVES AS RHO KINASE INHIBITORS
A 61K 31/472	EP 2303846*	SUBSTITUTED ISOQUINOLINES AND ISOQUINOLINONES AS RHO KINASE INHIBITORS
A 61K 31/472	EP 2313374*	6-SUBSTITUTED ISOQUINOLINES AND ISOQUINOLINONES
A 61K 31/4725	EP 2114920*	SUBSTITUTED ISOQUINOLINE AND ISOQUINOLINONE DERIVATIVES
A 61K 31/4725	EP 2300428*	AMINOPYRIDINE DERIVATIVES
A 61K 31/4725	EP 2311810	AMIDINE DERIVATIVE
A 61K 31/4725	EP 2313374*	6-SUBSTITUTED ISOQUINOLINES AND ISOQUINOLINONES
A 61K 31/4725	EP 2313391*	ISOQUINOLINONE DERIVATIVES AS NK3 ANTAGONISTS
A 61K 31/4738	EP 2300463*	HETEROCYCLIC UREA DERIVATIVES FOR THE TREATMENT OF BACTERIAL INFECTIONS
A 61K 31/4745	EP 2063895*	COMBINATION DRUG
A 61K 31/4745	EP 2300476*	TRICYCLIC NITROGEN CONTAINING COMPOUNDS AND THEIR USE AS ANTIBACTERIALS
A 61K 31/4745	EP 2307003*	COMBINATION THERAPY WITH PM00104 AND ANOTHER ANTITUMOR AGENT
A 61K 31/475	EP 2309991*	THERAPEUTIC POLYMERIC NANOPARTICLES COMPRISING VINCA ALKALOIDS AND METHODS OF MAKING AND USING SAME
A 61K 31/48	EP 2310000*	DERMAL DELIVERY
A 61K 31/485	EP 2300009*	ORAL ADMINISTRATION OF PERIPHERALLY-ACTING OPIOID ANTAGONISTS
A 61K 31/485	EP 2300479*	NALMEFENE HYDROCHLORIDE DIHYDRATE
A 61K 31/485	EP 2305683	Pharmaceutical dosage form comprising oxycodone hydrochloride having less than 25 ppm 14-hydroxycodeinone
A 61K 31/485	EP 2307420*	NALMEFENE DI-ESTER PRODRUGS
A 61K 31/485	EP 2308494	Tamper resistant dosage forms
A 61K 31/485	EP 2311458	Tamper resistant dosage forms
A 61K 31/485	EP 2311459	Tamper resistant oral pharmaceutical dosage forms comprising an opioid analgesic
A 61K 31/485	EP 2314589	Process for preparing oxycodone hydrochloride having less than 25ppm 14-hydroxycodeinone
A 61K 31/485	EP 2316837	Process for preparing oxycodone hydrochloride having less than 25ppm 14-hydroxycodeinone
A 61K 31/485	EP 2317991*	USE OF OPIOID ANTAGONISTS FOR TREATING URINARY RETENTION
A 61K 31/485	EP 2318372*	LARGE SUBSTITUENT, NON-PHENOLIC AMINE OPIOIDS
A 61K 31/485	EP 2319846	Process for preparing oxycodone hydrochloride having less than 25ppm 14-hydroxycodeinone

(51)	Број објаве европске пријаве патента	(51)
A 61K 31/495	EP 2120579*	INHIBITORS OF POLY(ADP-RIBOSE)POLYMERASE
A 61K 31/495	EP 2300426*	COMPOUNDS COMPRISING A CYCLOBUTOXY GROUP
A 61K 31/496	EP 2099759*	ANTIBACTERIAL QUINOLINE DERIVATIVES
A 61K 31/496	EP 2116542	SOLID OF MACROLIDE COMPOUND, METHOD FOR PRODUCTION THEREOF, AND PHARMACEUTICAL COMPOSITION COMPRISING THE SAME
A 61K 31/496	EP 2119706	PYRIDINE OR PYRIMIDINE DERIVATIVE HAVING EXCELLENT CELL GROWTH INHIBITION EFFECT AND EXCELLENT ANTI-TUMOR EFFECT ON CELL STRAIN HAVING AMPLIFICATION OF HGFR GENE
A 61K 31/496	EP 2121683*	2-PIPERAZIN-1-YL-3H-IMIDAZO[4,5-B]PYRIDINE DERIVATIVES
A 61K 31/496	EP 2293795*	PHARMACEUTICAL COMBINATION
A 61K 31/496	EP 2298747	TRIAZOLE DERIVATIVE OR SALT THEREOF
A 61K 31/496	EP 2300422*	AZETIDINES AND CYCLOBUTANES AS HISTAMINE H3 RECEPTOR ANTAGONISTS
A 61K 31/496	EP 2300426*	COMPOUNDS COMPRISING A CYCLOBUTOXY GROUP
A 61K 31/496	EP 2300465*	IMIDAZOPYRIDINE DERIVATIVES AS INHIBITORS OF RECEPTOR TYROSINE KINASES
A 61K 31/496	EP 2303268*	PHARMACEUTICAL COMPOSITIONS BASED ON KININ B2 RECEPTOR ANTAGONISTS AND CORTICOSTEROIDS, AND THEIR USE
A 61K 31/496	EP 2303850*	NOVEL POTASSIUM CHANNEL BLOCKERS AND USES THEREOF
A 61K 31/496	EP 2307374*	PIPERAZIN-1-YL-TRIFLUOROMETHYL-SUBSTITUTED-PYRIDINES AS FAST DISSOCIATING DOPAMINE 2 RECEPTOR ANTAGONISTS
A 61K 31/496	EP 2310366*	NOVEL TRIAZOLO(4,3-A)PYRIDINE DERIVATIVES, PROCESS FOR THE PREPARATION THEREOF, USE THEREOF AS MEDICAMENTS, PHARMACEUTICAL COMPOSITIONS AND NOVEL USE, IN PARTICULAR AS MET INHIBITORS
A 61K 31/496	EP 2318396*	A CRYSTALLINE FORM OF POSACONAZOLE
A 61K 31/496	EP 2319840	AMINOPROPYLIDENE DERIVATIVE
A 61K 31/4965	EP 2296659*	DRUG COMBINATIONS COMPRISING A DGAT INHIBITOR AND A PPAR-AGONIST
A 61K 31/497	EP 2300465*	IMIDAZOPYRIDINE DERIVATIVES AS INHIBITORS OF RECEPTOR TYROSINE KINASES
A 61K 31/497	EP 2305641	SULFONAMIDE COMPOUND OR SALT THEREOF
A 61K 31/497	EP 2305672	SULFUR-CONTAINING HETEROCYCLIC DERIVATIVE HAVING ß-SECRETASE-INHIBITING ACTIVITY
A 61K 31/497	EP 2310012*	PROCESS FOR THE PREPARATION OF SUBSTITUTED PYRIMIDINE DERIVATIVES
A 61K 31/497	EP 2321286*	SUBSTITUTED N-OXIDE PYRAZINE DERIVATIVES
A 61K 31/498	EP 2303880*	NOVEL TRICYCLIC DERIVATIVES, PROCESS FOR THE PREPARATION THEREOF AND PHARMACEUTICAL COMPOSITIONS CONTAINING SAME
A 61K 31/498	EP 2307400*	INHIBITORS OF PI3 KINASE
A 61K 31/4985	EP 2297152*	ANHYDROUS CRYSTAL FORM OF ORVEPITANT MALEATE
A 61K 31/4985	EP 2300469*	FUSED NITROGEN CONTAINING HETEROCYCLES AND COMPOSITIONS THEREOF AS KINASE INHIBITORS
A 61K 31/4985	EP 2303262*	DPP-IV INHIBITORS FOR USE IN THE TREATMENT OF NAFLD
A 61K 31/4985	EP 2303880*	NOVEL TRICYCLIC DERIVATIVES, PROCESS FOR THE PREPARATION THEREOF AND PHARMACEUTICAL COMPOSITIONS CONTAINING SAME
A 61K 31/4985	EP 2307426*	FUSED PYRAZINE COMPOUNDS USEFUL FOR THE TREATMENT OF DEGENERATIVE AND INFLAMMATORY DISEASES
A 61K 31/4985	EP 2321324*	CRYSTALLINE FORMS OF A PYRIDINE DERIVATIVE

(51)	Број објаве европске пријаве патента	(51)
A 61K 31/4995	EP 2303274*	MULTIPLE MYELOMA TREATMENTS
A 61K 31/4995	EP 2307003*	COMBINATION THERAPY WITH PM00104 AND ANOTHER ANTITUMOR AGENT
A 61K 31/4995	EP 2307426*	FUSED PYRAZINE COMPOUNDS USEFUL FOR THE TREATMENT OF DEGENERATIVE AND INFLAMMATORY DISEASES
A 61K 31/50	EP 2120579*	INHIBITORS OF POLY(ADP-RIBOSE)POLYMERASE
A 61K 31/501	EP 2079732*	3- (1, 3-BENZ0DI0X0L-5-YL) -6- (4-CYCLOPROPYLPIPERAZIN-1-YL) -PYRIDAZINE, ITS SALTS AND SOLVATES AND ITS USE AS HISTAMINE H3 RECEPTOR ANTAGONIST
A 61K 31/501	EP 2297142*	NOVEL SUBSTITUTED PYRIDIN-2-ONES AND PYRIDAZIN-3-ONES
A 61K 31/501	EP 2300465*	IMIDAZOPYRIDINE DERIVATIVES AS INHIBITORS OF RECEPTOR TYROSINE KINASES
A 61K 31/501	EP 2305641	SULFONAMIDE COMPOUND OR SALT THEREOF
A 61K 31/501	EP 2310374*	SUBSTITUTED 6- (1-PIPERAZINYL) -PYRIDAZINES AS 5-HT6 RECEPTOR ANTAGONISTS
A 61K 31/501	EP 2318389*	PYRIDAZINE DERIVATIVES AS SMO INHIBITORS
A 61K 31/502	EP 2305221	Dna damage repair inhibitors for treatment of cancer
A 61K 31/502	EP 2307400*	INHIBITORS OF PI3 KINASE
A 61K 31/502	EP 2313376*	SUBSTITUTED 1-BENZYL-CINNOLIN-4(1H)-ONE DERIVATIVES, PREPARATION THEREOF, AND THERAPEUTIC USE THEREOF
A 61K 31/5025	EP 2084162*	BICYCLIC TRIAZOLES AS PROTEIN KINASE MODULATORS
A 61K 31/5025	EP 2297159*	SUBSTITUTED QUINAZOLINES
A 61K 31/5025	EP 2303262*	DPP-IV INHIBITORS FOR USE IN THE TREATMENT OF NAFLD
A 61K 31/5025	EP 2308870	2-oxo-1-pyrrolidine deriatives, processes for preparing them and their uses
A 61K 31/505	EP 2063895*	COMBINATION DRUG
A 61K 31/505	EP 2307003*	COMBINATION THERAPY WITH PM00104 AND ANOTHER ANTITUMOR AGENT
A 61K 31/505	EP 2310014*	TRICYCLIC COMPOUNDS HAVING ANTIMITOTIC AND/OR ANTITUMOR ACTIVITY AND METHODS OF USE THEREOF
A 61K 31/505	EP 2313414*	KINASE INHIBITORS AND METHODS OF USE
A 61K 31/505	EP 2321321*	TRIAZOLO [4, 5-D]PYRAMIDINE DERIVATIVES AND THEIR USE AS PURINE RECEPTOR ANTAGONISTS
A 61K 31/506	EP 2061468*	TYROSINE KINASE INHIBITORS CONTAINING A ZINC BINDING MOIETY
A 61K 31/506	EP 2119706	PYRIDINE OR PYRIMIDINE DERIVATIVE HAVING EXCELLENT CELL GROWTH INHIBITION EFFECT AND EXCELLENT ANTI-TUMOR EFFECT ON CELL STRAIN HAVING AMPLIFICATION OF HGFR GENE
A 61K 31/506	EP 2136809*	RAF KINASE INHIBITORS CONTAINING A ZINC BINDING MOIETY
A 61K 31/506	EP 2296640*	METHODS FOR PREVENTING THE DEVELOPMENT OF RETINOPATHY BY THE ORAL ADMINISTRATION OF NNR LIGANDS
A 61K 31/506	EP 2298747	TRIAZOLE DERIVATIVE OR SALT THEREOF
A 61K 31/506	EP 2300465*	IMIDAZOPYRIDINE DERIVATIVES AS INHIBITORS OF RECEPTOR TYROSINE KINASES
A 61K 31/506	EP 2303262*	DPP-IV INHIBITORS FOR USE IN THE TREATMENT OF NAFLD
A 61K 31/506	EP 2303869*	PROCESS FOR THE PREPARATION OF BENZOIMIDAZOL-2-YL PYRIMIDINE DERIVATIVES
A 61K 31/506	EP 2305641	SULFONAMIDE COMPOUND OR SALT THEREOF
A 61K 31/506	EP 2307031*	FILM-FORMING LIQUID FORMULATIONS FOR DRUG RELEASE TO HAIR AND SCALP
A 61K 31/506	EP 2308509	INHIBITOR OF ANALGESIC TOLERANCE

(51)	Број објаве европске пријаве патента	(51)
A 61K 31/506	EP 2311807	Compounds and composition as protein kinase inhibitors
A 61K 31/506	EP 2315592*	TREATMENT OF PULMONARY ARTERIAL HYPERTENSION
A 61K 31/506	EP 2315751*	ALKYNYL ALCOHOLS AS KINASE INHIBITORS
A 61K 31/506	EP 2318389*	PYRIDAZINE DERIVATIVES AS SMO INHIBITORS
A 61K 31/506	EP 2318392*	PYRIMIDINE DERIVATIVES AS KINASE INHIBITORS
A 61K 31/506	EP 2320895*	CDK MODULATORS
A 61K 31/506	EP 2321298*	AURORA KINASE MODULATORS AND METHODS OF USE
A 61K 31/513	EP 2303262*	DPP-IV INHIBITORS FOR USE IN THE TREATMENT OF NAFLD
A 61K 31/513	EP 2303283*	ANTI-CANCER COMBINATION THERAPY
A 61K 31/513	EP 2315581*	TOPICAL COMPOSITION FOR THE TREATMENT OF ACTINIC KERATOSIS
A 61K 31/517	EP 2061772*	MULTI-FUNCTIONAL SMALL MOLECULES AS ANTI-PROLIFERATIVE AGENTS
A 61K 31/517	EP 2063895*	COMBINATION DRUG
A 61K 31/517	EP 2297116*	SUBSTITUTED QUINAZOLINES
A 61K 31/517	EP 2299971*	SOLID PHARMACEUTICAL FORMULATIONS COMPRISING BIBW 2992
A 61K 31/517	EP 2300440*	3,4-DIHYDROPYRIMIDINE TRPA1 ANTAGONISTS
A 61K 31/517	EP 2300441*	CRYSTALLINE SALT FORMS OF ANTIFOLATE COMPOUNDS AND METHODS OF MANUFACTURING THEREOF
A 61K 31/517	EP 2303276*	FUMARATE SALT OF 4- (3-CHLORO-2-FLUOROANILINO) - 7-METHOXY-6- { [1- (N-METHYLCARBAMOYLMETHYL) PIPERIDIN- 4-YL]OXY}QUINAZOLINE
A 61K 31/517	EP 2307003*	COMBINATION THERAPY WITH PM00104 AND ANOTHER ANTITUMOR AGENT
A 61K 31/519	EP 2063895*	COMBINATION DRUG
A 61K 31/519	EP 2069348*	NOVEL PYRAZOLOPYRIMIDINES AS CYCLIN DEPENDENT KINASE INHIBITORS
A 61K 31/519	EP 2069349*	PYRAZOLOPYRIMIDINES AS CYCLIN DEPENDENT KINASE INHIBITORS
A 61K 31/519	EP 2069350*	NOVEL PYRAZOLOPYRIMIDINES AS CYCLIN DEPENDENT KINASE INHIBITORS
A 61K 31/519	EP 2293795*	PHARMACEUTICAL COMBINATION
A 61K 31/519	EP 2296663*	COMBINATIONS COMPRISING METHOTREXATE AND DHODH INHIBITORS
A 61K 31/519	EP 2300440*	3,4-DIHYDROPYRIMIDINE TRPA1 ANTAGONISTS
A 61K 31/519	EP 2300478*	1-HETEROCYCLYL-1,5-DIHYDRO-PYRAZOLO[3,4-D]PYRIMIDIN-4-ONE DERIVATIVES AND THEIR USE AS PDE9A MODULATORS
A 61K 31/519	EP 2303251*	NEW COMBINATION FOR USE IN THE TREATMENT OF INFLAMMATORY DISORDERS
A 61K 31/519	EP 2303875*	COMPOSITIONS WITH AND PROCESS FOR METHYLMORPHOLIN-SUBSITUTED PYRIDO[2,3-D]PYRIMIDINES
A 61K 31/519	EP 2307401*	ANTINEOPLASTIC DERIVATIVES OF 4-OXO-1,4-DIHYDRO-QUINOLINE, PREPARATION THEREOF, AND THERAPEUTIC USE THEREOF
A 61K 31/519	EP 2307416*	SUBSTITUTED TRICYCLIC DERIVATIVES AGAINST NEURODEGENERATIVE DISEASES
A 61K 31/519	EP 2308509	INHIBITOR OF ANALGESIC TOLERANCE
A 61K 31/519	EP 2309983*	PHARMACEUTICAL FORM COMPRISING TETRAHYDROBIOPTERIN
A 61K 31/519	EP 2313414*	KINASE INHIBITORS AND METHODS OF USE
A 61K 31/519	EP 2318410*	NEW SMALL-MOLECULE PDE-10 INHIBITORS
A 61K 31/519	EP 2318415*	OXAZOLOPYRIMIDINES AS EDG-1 RECEPTOR AGONISTS
A 61K 31/519	EP 2320895*	CDK MODULATORS
A 61K 31/519	EP 2321313*	SUBSTITUTED PYRIMIDO [2, 1-A]ISOQUINOLIN-4-ONE DERIVATIVES

(51)	Број објаве европске пријаве патента	(51)
A 61K 31/519	EP 2321314*	SUBSTITUTED PYRIMIDONE DERIVATIVES
A 61K 31/519	EP 2321315*	SUBSTITUTED ALKYL PYRIMIDIN-4-ONE DERIVATIVES
A 61K 31/519	EP 2321316*	SUBSTITUTED PYRIMIDIN-4-ONE DERIVATIVES
A 61K 31/519	EP 2322223	THERAPEUTIC AGENT FOR MIGRAINE
A 61K 31/52	EP 2112151	Haloaryl substituted aminopurines, compositions thereof, and methods of treatment therewith
A 61K 31/52	EP 2289893	Haloaryl substituted aminopurines, compositions thereof, and methods of treatment therewith
A 61K 31/52	EP 2303884*	ADENINE RECEPTOR LIGANDS
A 61K 31/52	EP 2308509	INHIBITOR OF ANALGESIC TOLERANCE
A 61K 31/52	EP 2322223	THERAPEUTIC AGENT FOR MIGRAINE
A 61K 31/522	EP 2301937	Prodrugs of A2b adenosine receptor antagonists
A 61K 31/522	EP 2303262*	DPP-IV INHIBITORS FOR USE IN THE TREATMENT OF NAFLD
A 61K 31/522	EP 2308509	INHIBITOR OF ANALGESIC TOLERANCE
A 61K 31/522	EP 2320905*	NOVEL ADENINE DERIVATIVES
A 61K 31/53	EP 2084162*	BICYCLIC TRIAZOLES AS PROTEIN KINASE MODULATORS
A 61K 31/53	EP 2300455*	SALTS OF 2-FLUORO-N-METHYL-4-[7-(QUINOLIN-6-YL-METHYL) - IMIDAZO [1, 2-B] [1, 2, 4] TRIAZIN-2-YL] BENZAMIDE AND PROCESSES RELATED TO PREPARING THE SAME
A 61K 31/53	EP 2300465*	IMIDAZOPYRIDINE DERIVATIVES AS INHIBITORS OF RECEPTOR TYROSINE KINASES
A 61K 31/53	EP 2300483*	TRIAZINE COMPOUNDS AS P13 KINASE AND MTOR INHIBITORS
A 61K 31/53	EP 2321295*	4-(PYRIDIN-4-YL)-1H-[1,3,5]TRIAZIN-2-ONE DERIVATIVES AS GSK3-BETA INHIBITORS FOR THE TREATMENT OF NEURODEGENERATIVE DISEASES
A 61K 31/5355	EP 2297133*	1, 2 DISUBSTITUTED HETEROCYCLIC COMPOUNDS
A 61K 31/5355	EP 2300426*	COMPOUNDS COMPRISING A CYCLOBUTOXY GROUP
A 61K 31/5355	EP 2300461*	CYCLIC INHIBITORS OF 11BETA-HYDROXYSTEROID DEHYDROGENASE 1
A 61K 31/5355	EP 2303863*	5- AND 6-MEMBERED HETEROCYCLIC COMPOUNDS
A 61K 31/5375	EP 2300426*	COMPOUNDS COMPRISING A CYCLOBUTOXY GROUP
A 61K 31/5377	EP 2063895*	COMBINATION DRUG
A 61K 31/5377	EP 2119706	PYRIDINE OR PYRIMIDINE DERIVATIVE HAVING EXCELLENT CELL GROWTH INHIBITION EFFECT AND EXCELLENT ANTI-TUMOR EFFECT ON CELL STRAIN HAVING AMPLIFICATION OF HGFR GENE
A 61K 31/5377	EP 2134680*	INHIBITORS OF HISTONE DEACETYLASE
A 61K 31/5377	EP 2298747	TRIAZOLE DERIVATIVE OR SALT THEREOF
A 61K 31/5377	EP 2300426*	COMPOUNDS COMPRISING A CYCLOBUTOXY GROUP
A 61K 31/5377	EP 2300428*	AMINOPYRIDINE DERIVATIVES
A 61K 31/5377	EP 2303850*	NOVEL POTASSIUM CHANNEL BLOCKERS AND USES THEREOF
A 61K 31/5377	EP 2310366*	NOVEL TRIAZOLO(4,3-A)PYRIDINE DERIVATIVES, PROCESS FOR THE PREPARATION THEREOF, USE THEREOF AS MEDICAMENTS, PHARMACEUTICAL COMPOSITIONS AND NOVEL USE, IN PARTICULAR AS MET INHIBITORS
A 61K 31/5377	EP 2313399*	THIOPHENE OR THIAZOLE DERIVATIVES AND THEIR USE AS PI3K INHIBITORS
A 61K 31/5377	EP 2319840	AMINOPROPYLIDENE DERIVATIVE
A 61K 31/5377	EP 2320895*	CDK MODULATORS
A 61K 31/538	EP 2303851*	NOVEL PHENOLIC AND CATECHOLIC AMINES AND PRODRUGS THEREOF
A 61K 31/538	EP 2303873*	BENZOXAZINONE DERIVATIVES ACTING AS BETA2-ADRENORECEPTOR AGONIST FOR THE TREATMENT OF RESPIRATORY DISORDERS
A 61K 31/5383	EP 2320895*	CDK MODULATORS

(51)	Број објаве европске пријаве патента	(51)
A 61K 31/54	EP 2310016*	PDE10 INHIBITORS AND RELATED COMPOSITIONS AND METHODS
A 61K 31/54	EP 2318008*	BINDING AND INHIBITING 5-HT4 RECEPTOR
A 61K 31/54	EP 2319840	AMINOPROPYLIDENE DERIVATIVE
A 61K 31/541	EP 2297120*	AMINODIHYDROTHIAZINE DERIVATIVES AS BACE INHIBITORS FOR THE TREATMENT OF ALZHEIMER'S DISEASE
A 61K 31/541	EP 2298747	TRIAZOLE DERIVATIVE OR SALT THEREOF
A 61K 31/541	EP 2303850*	NOVEL POTASSIUM CHANNEL BLOCKERS AND USES THEREOF
A 61K 31/541	EP 2305672	SULFUR-CONTAINING HETEROCYCLIC DERIVATIVE HAVING ß-SECRETASE-INHIBITING ACTIVITY
A 61K 31/549	EP 2317987*	EPROSARTAN COMPOSITIONS
A 61K 31/55	EP 2268270*	IMPROVED FORMULATIONS FOR POORLY PERMEABLE ACTIVE PHARMACEUTICAL INGREDIENTS
A 61K 31/55	EP 2298297	Combination of an inhibitor of the If current of the sinus node and an inhibitor of the angiotensin converting enzyme
A 61K 31/55	EP 2310396*	MACROCYCLIC INDOLE DERIVATIVES USEFUL AS HEPATITIS C VIRUS INHIBITORS
A 61K 31/55	EP 2311810	AMIDINE DERIVATIVE
A 61K 31/55	EP 2314292	Endoparasiticidal compositions
A 61K 31/55	EP 2317852*	PHARMACEUTICAL FORMULATIONS CONTAINING DOPAMINE RECEPTOR LIGANDS
A 61K 31/55	EP 2320895*	CDK MODULATORS
A 61K 31/55	EP 2322162	5HT2C receptor modulator compositions and methods of use
A 61K 31/551	EP 2293790*	COMBINATION OF A NICOTINIC RECEPTOR PARTIAL AGONIST AND OF AN ACETYLCHOLINESTERASE INHIBITOR, PHARMACEUTICAL COMPOSITION CONTAINING SAME AND USE THEREOF IN THE TREATMENT OF COGNITIVE DISORDERS
A 61K 31/551	EP 2300473*	FUMARATE SALT OF 4-BROMOPHENYL 1,4-DIAZABICYCLO[3.2.2]NONANE-4-CARBOXYLATE, CRYSTALLINE FORMS THEREOF, PREPARATION THEREOF AND THERAPEUTIC USE THEREOF
A 61K 31/553	EP 2300462*	MACROCYCLIC UREA AND SULFAMIDE DERIVATIVES AS INHIBITORS OF TAFIA
A 61K 31/553	EP 2311464	Agents for preventing and treating disorders involving modulation of the ryr receptors
A 61K 31/554	EP 2307389*	DIBENZOTHIAZEPINE DERIVATIVES AND USE THEREOF
A 61K 31/554	EP 2309994*	SUSTAINED RELEASE PHARMACEUTICAL COMPOSITIONS COMPRISING QUETIAPINE
A 61K 31/5575	EP 2306977*	METHOD AND COMPOSITION FOR TREATING OCULAR HYPERTENSION AND GLAUCOMA
A 61K 31/56	EP 2307031*	FILM-FORMING LIQUID FORMULATIONS FOR DRUG RELEASE TO HAIR AND SCALP
A 61K 31/565	EP 2063895*	COMBINATION DRUG
A 61K 31/565	EP 2310001*	TRANSDERMAL ESTROGEN DEVICE AND DELIVERY
A 61K 31/573	EP 2303227*	CONTROLLED RELEASE CORTICOSTEROID COMPOSITIONS AND METHODS FOR THE TREATMENT OF OTIC DISORDERS
A 61K 31/573	EP 2303268*	PHARMACEUTICAL COMPOSITIONS BASED ON KININ B2 RECEPTOR ANTAGONISTS AND CORTICOSTEROIDS, AND THEIR USE
A 61K 31/573	EP 2318427*	GLUCOCORTICOIDS ATTACHED TO NITRATE ESTERS VIA AN AROMATIC LINKER IN POSITION 21 AND THEIR USE IN OPHTHALMOLOGY
A 61K 31/58	EP 2263676	Compositions for inhibiting or treating Hepatitis C viruses
A 61K 31/58	EP 2297177*	C-RING-SUBSTITUTED PREGN-4-ENE-21,17-CARBOLACTONE, AND PHARMACEUTICAL PREPARATIONS COMPRISING THE LATTER

(51)	Број објаве европске пријаве патента	(51)
A 61K 31/58	EP 2306988*	PHARMACEUTICAL FORMULATION FOR TREATING THE UPPER DIGESTIVE TRACT
A 61K 31/58	EP 2307439*	ESTRATRIENE DERIVATIVES COMPRISING HETEROCYCLIC BIOISOSTERES FOR THE PHENOLIC A-RING
A 61K 31/585	EP 2307031*	FILM-FORMING LIQUID FORMULATIONS FOR DRUG RELEASE TO HAIR AND SCALP
A 61K 31/60	EP 2315581*	TOPICAL COMPOSITION FOR THE TREATMENT OF ACTINIC KERATOSIS
A 61K 31/69	EP 2073816*	BORONIC ACIDS AND ESTERS AS INHIBITORS OF FATTY ACID AMIDE HYDROLASE
A 61K 31/70	EP 2114153*	TREATMENT AND PREVENTION OF NEURODEGENERATIVE DISEASES USING GENE THERAPY
A 61K 31/70	EP 2310020*	NOVEL ACETATES OF 2-DEOXY MONOSACCHARIDES WITH ANTICANCER ACTIVITY
A 61K 31/7012	EP 2310020*	NOVEL ACETATES OF 2-DEOXY MONOSACCHARIDES WITH ANTICANCER ACTIVITY
A 61K 31/704	EP 2063895*	COMBINATION DRUG
A 61K 31/704	EP 2307003*	COMBINATION THERAPY WITH PM00104 AND ANOTHER ANTITUMOR AGENT
A 61K 31/7048	EP 2308886	CRYSTAL OF SPIROKETAL DERIVATIVE, AND PROCESS FOR PRODUCTION THEREOF
A 61K 31/7056	EP 2315593*	USE OF IDRABIOTAPARINUX FOR DECREASING THE INCIDENCE OF BLEEDINGS DURING AN ANTITHROMBOTIC TREATMENT
A 61K 31/7068	EP 2303283*	ANTI-CANCER COMBINATION THERAPY
A 61K 31/7076	EP 2303283*	ANTI-CANCER COMBINATION THERAPY
A 61K 31/7088	EP 2307029*	RNA ANTAGONISTS TARGETING HSP27
A 61K 31/7088	EP 2310506*	RNA ANTAGONISTS TARGETING GLI2
A 61K 31/7088	EP 2315594*	METHODS OF TREATING A MEIOTIC KINESIN-ASSOCIATED DISEASE
A 61K 31/7105	EP 2315594*	METHODS OF TREATING A MEIOTIC KINESIN-ASSOCIATED DISEASE
A 61K 31/713	EP 2223692	RNAi inhibition of alpha-ENaC expression
A 61K 31/713	EP 2223693	RNAi inhibition of alpha-ENaC expression
A 61K 31/713	EP 2223694	RNAi inhibition of alpha-ENaC expression
A 61K 31/713	EP 2223695	RNAi inhibition of alpha-ENaC expression
A 61K 31/713	EP 2224004	RNAi inhibition of alpha-ENaC expression
A 61K 31/713	EP 2224005	RNAi inhibition of alpha-ENaC expression
A 61K 31/7135	EP 2079475*	A sealed photovoltaic apparatus
A 61K 31/722	EP 2306999*	COMPOSITIONS FOR TREATING ROSACEA
A 61K 31/722	EP 2307031*	FILM-FORMING LIQUID FORMULATIONS FOR DRUG RELEASE TO HAIR AND SCALP
A 61K 31/731	EP 2303287*	ANTIALLERGIC MARINE BIOPOLYMERS
A 61K 31/755	EP 2296635*	ARTIFICIAL OXYGEN CARRIERS AND USE THEREOF
A 61K 31/765	EP 2300009*	ORAL ADMINISTRATION OF PERIPHERALLY-ACTING OPIOID ANTAGONISTS
A 61K 31/785	EP 2068819*	DENDRIMER COMPOSITIONS
A 61K 31/785	EP 2111105*	METHOD OF DELAYING THE ONSET OF CLINICALLY DEFINITE MULTIPLE SCLEROSIS
A 61K 33/00	EP 2303289*	MONO (IRON HYDROXYPYRONE) AND COMBINATION (IRON HYDROXYPYRONE AND GI INFLAMMATION INHIBITING AGENTS) COMPOSITIONS FOR ANAEMIA OR H. PYLORI INFECTIONS
A 61K 33/06	EP 2298276	Accelerating agent of calcium absorption
A 61K 33/10	EP 2298276	Accelerating agent of calcium absorption
A 61K 33/14	EP 2298276	Accelerating agent of calcium absorption
A 61K 33/24	EP 2309989*	DRUG LOADED POLYMERIC NANOPARTICLES AND METHODS OF MAKING AND USING SAME

(51)	Број објаве европске пријаве патента	(51)
A 61K 33/26	EP 2303289*	MONO (IRON HYDROXYPYRONE) AND COMBINATION (IRON HYDROXYPYRONE AND GI INFLAMMATION INHIBITING AGENTS) COMPOSITIONS FOR ANAEMIA OR H. PYLORI INFECTIONS
A 61K 35/12	EP 2318520*	COMPOSITIONS FOR MESODERM DERIVED ISL1+ MULTIPOTENT CELLS (IMPS), EPICARDIAL PROGENITOR CELLS (EPCS) AND MULTIPOTENT CXCR4+CD56+ CELLS (C56CS) AND METHODS OF USE
A 61K 35/28	EP 2297304*	HUMAN BONE-FORMING CELLS IN THE TREATMENT OF CONDITIONS AND BONE DISEASES ASSOCIATED WITH IMMUNODEFICIENCY OR IMMUNOSUPPRESSION
A 61K 35/28	EP 2300023*	MICROORGANISMS FOR PREVENTING AND TREATING NEOPLASMS ACCOMPANYING CELLULAR THERAPY
A 61K 35/48	EP 2300023*	MICROORGANISMS FOR PREVENTING AND TREATING NEOPLASMS ACCOMPANYING CELLULAR THERAPY
A 61K 35/76	EP 2300023*	MICROORGANISMS FOR PREVENTING AND TREATING NEOPLASMS ACCOMPANYING CELLULAR THERAPY
A 61K 36/185	EP 2293805*	LOZENGE COMPOSITION FOR TREATING INFLAMMATORY DISEASES OF THE MOUTH AND PHARYNX
A 61K 36/68	EP 2293805*	LOZENGE COMPOSITION FOR TREATING INFLAMMATORY DISEASES OF THE MOUTH AND PHARYNX
A 61K 38/00	EP 1977762	CTGF AS TARGET FOR THE THERAPY OF DIABETIC NEPHROPATHY
A 61K 38/00	EP 2083842*	ANALOGS OF GHRELIN SUBSTITUTED AT THE N-TERMINAL
A 61K 38/00	EP 2101802*	INHIBITING COLLAGEN-INDUCED PLATELET AGGREGATION AND ACTIVATION WITH PEPTIDE VARIANTS
A 61K 38/00	EP 2111105*	METHOD OF DELAYING THE ONSET OF CLINICALLY DEFINITE MULTIPLE SCLEROSIS
A 61K 38/00	EP 2300035*	GIP-BASED MIXED AGONISTS FOR TREATMENT OF METABOLIC DISORDERS AND OBESITY
A 61K 38/00	EP 2310028*	SUPPRESSION OF NEUROENDOCRINE DISEASES
A 61K 38/00	EP 2310029*	SUPPRESSION OF CANCERS
A 61K 38/00	EP 2320923*	TRUNCATED ANALOGUES OF GLUCOSE-DEPENDENT INSULINOTROPIC POLYPEPTIDE
A 61K 38/03	EP 2230245	Peptides having pharmacological activity for treating disorders associated with altered cell migration, such as cancer
A 61K 38/04	EP 2300494*	ANTI-AMYLOID IMMUNOGENIC COMPOSITIONS, METHODS AND USES
A 61K 38/05	EP 2318419*	BORONATE ESTER COMPOUNDS AND PHARMACEUTICAL COMPOSITIONS THEREOF
A 61K 38/06	EP 2310095*	MACROCYCLIC QUINOXALINE COMPOUNDS AS HCV NS3 PROTEASE INHIBITORS
A 61K 38/07	EP 2310095*	MACROCYCLIC QUINOXALINE COMPOUNDS AS HCV NS3 PROTEASE INHIBITORS
A 61K 38/08	EP 2303268*	PHARMACEUTICAL COMPOSITIONS BASED ON KININ B2 RECEPTOR ANTAGONISTS AND CORTICOSTEROIDS, AND THEIR USE
A 61K 38/08	EP 2310032*	COMPOUNDS FOR TREATING SYMPTOMS ASSOCIATED WITH PARKINSON'S DISEASE
A 61K 38/08	EP 2310033*	COMPOUNDS FOR TREATING AMYLOIDOSES
A 61K 38/08	EP 2310034*	COMPOUNDS FOR TREATING BETA-AMYLOIDOSES
A 61K 38/08	EP 2310095*	MACROCYCLIC QUINOXALINE COMPOUNDS AS HCV NS3 PROTEASE INHIBITORS
A 61K 38/08	EP 2318428*	ANTICANCER COMPOUNDS
A 61K 38/10	EP 2111867	Novel formulations of tumour-associated peptides binding to human leukocyte antigen (HLA) class I or II molecules for vaccines

(51)	Број објаве европске пријаве патента	(51)
A 61K 38/10	EP 2300494*	ANTI-AMYLOID IMMUNOGENIC COMPOSITIONS, METHODS AND USES
A 61K 38/10	EP 2307041*	DOSING REGIMEN
A 61K 38/10	EP 2307042*	MODULATION OF THE TRPV : VPS10P-DOMAIN RECEPTOR SYSTEM FOR THE TREATMENT OF PAIN
A 61K 38/13	EP 2307446*	NONIMMUNOSUPPRESSIVE CYCLOSPORINE ANALOGUE MOLECULES
A 61K 38/16	EP 2111105*	METHOD OF DELAYING THE ONSET OF CLINICALLY DEFINITE MULTIPLE SCLEROSIS
A 61K 38/16	EP 2114431*	A COMPOSITION CONTAINING ARAZYME FOR THE PREVENTION AND TREATMENT OF CANCER
A 61K 38/16	EP 2297185*	PARVOVIRAL CAPSID WITH INCORPORATED GLY-ALA REPEAT REGION
A 61K 38/16	EP 2303306*	DEVELOPMENT OF A C-REACTIVE PROTEIN MUTANT WITH IMPROVED THERAPEUTIC BENEFIT IN IMMUNE THROMBOCYTOPENIA AND LUPUS NEPHRITIS
A 61K 38/16	EP 2318435*	MODULATORS OF MYC, METHODS OF USING THE SAME, AND METHODS OF IDENTIFYING AGENTS THAT MODULATE MYC
A 61K 38/17	EP 2294197*	VARIANT HHIP1 PROTEIN AND METHODS AND USES THEREOF
A 61K 38/17	EP 2300494*	ANTI-AMYLOID IMMUNOGENIC COMPOSITIONS, METHODS AND USES
A 61K 38/17	EP 2306985*	CONTROLLED RELEASE COMPOSITIONS OF AGENTS THAT REDUCE CIRCULATING LEVELS OF PLATELETS AND METHODS THEREFOR
A 61K 38/17	EP 2310508*	TGF-B ANTAGONIST MULTI-TARGET BINDING PROTEINS
A 61K 38/17	EP 2318032*	USE OF HSP70 AS A REGULATOR OF ENZYMATIC ACTIVITY
A 61K 38/17	EP 2320928*	TREATMENT OF RHEUMATOID ARTHRITIS WITH MAMMAL BETA DEFENSINS
A 61K 38/17	EP 2320929*	TREATMENT OF INFLAMMATORY DISEASES WITH MAMMAL BETA DEFENSINS
A 61K 38/17	EP 2320930*	TREATMENT OF INFLAMMATORY BOWEL DISEASES WITH MAMMAL BETA DEFENSINS
A 61K 38/17	EP 2321345*	MULTI-SPECIFIC BINDING PROTEINS TARGETING B CELL DISORDERS
A 61K 38/18	EP 2228071	Intra-vascular kidney gene therapy with plasmid encoding BMP-7
A 61K 38/18	EP 2294087*	ANTI-HEPCIDIN ANTIBODIES AND METHODS OF USE
A 61K 38/18	EP 2296690*	FGF21 MUTANTS AND USES THEREOF
A 61K 38/18	EP 2303310*	COMPOSITIONS AND METHODS FOR USING CELLS TO TREAT HEART TISSUE
A 61K 38/18	EP 2318034*	WOUND HEALING
A 61K 38/20	EP 2063908*	USE OF MODIFIED INTERLEUKIN-8 PROTEINS FOR TREATING REPERFUSION INJURY OR TRANSPLANT REJECTION
A 61K 38/20	EP 2303310*	COMPOSITIONS AND METHODS FOR USING CELLS TO TREAT HEART TISSUE
A 61K 38/20	EP 2318034*	WOUND HEALING
A 61K 38/22	EP 2296632*	CONTROLLED-RELEASE APOPTOSIS MODULATING COMPOSITIONS AND METHODS FOR THE TREATMENT OF OTIC DISORDERS
A 61K 38/22	EP 2317979*	PHARMACEUTICAL COMPOSITIONS OF SOMATOTROPHIC HORMONES
A 61K 38/25	EP 2310041*	UNACYLATED GHRELIN AND ANALOGS AS THERAPEUTIC AGENTS FOR VASCULAR REMODELING IN DIABETIC PATIENTS AND TREATMENT OF CARDIOVASCULAR DISEASE
A 61K 38/28	EP 2300046*	SUPER FAST-ACTING INSULIN COMPOSITIONS

(51)	Број објаве европске пријаве патента	(51)
A 61K 38/43	EP 2101809*	PHARMACEUTICAL COMPOSITION CONTAINING ARAZYME FOR THE PREVENTION OF LIVER DYSFUNCTION
A 61K 38/47	EP 2300046*	SUPER FAST-ACTING INSULIN COMPOSITIONS
A 61K 38/48	EP 2296632*	CONTROLLED-RELEASE APOPTOSIS MODULATING COMPOSITIONS AND METHODS FOR THE TREATMENT OF OTIC DISORDERS
A 61K 38/48	EP 2296694*	NEUTRALIZING PROPROTEIN CONVERTASE SUBTILISIN KEXIN TYPE 9 (PCSK9) VARIANTS AND USES THEREOF
A 61K 38/48	EP 2303310*	COMPOSITIONS AND METHODS FOR USING CELLS TO TREAT HEART TISSUE
A 61K 38/51	EP 2315834*	THE TUBERCULOSIS RV2386C PROTEIN, COMPOSITIONS AND USES THEREOF
A 61K 38/52	EP 2315834*	THE TUBERCULOSIS RV2386C PROTEIN, COMPOSITIONS AND USES THEREOF
A 61K 39/00	EP 2114153*	TREATMENT AND PREVENTION OF NEURODEGENERATIVE DISEASES USING GENE THERAPY
A 61K 39/00	EP 2300494*	ANTI-AMYLOID IMMUNOGENIC COMPOSITIONS, METHODS AND USES
A 61K 39/00	EP 2304034*	AN ADAPTER MOLECULE FOR THE DELIVERY OF ADENOVIRUS VECTORS
A 61K 39/00	EP 2319868	Immunotherapeutic treatment for inducing the regression of atherosclerotic plaques
A 61K 39/04	EP 2315597*	NOVEL COMPOSITIONS AND METHODS
A 61K 39/04	EP 2315773*	NOVEL COMPOSITIONS AND METHODS
A 61K 39/04	EP 2315834*	THE TUBERCULOSIS RV2386C PROTEIN, COMPOSITIONS AND USES THEREOF
A 61K 39/07	EP 2320945*	STABLE ANTHRAX VACCINE FORMULATIONS
A 61K 39/09	EP 2298342	Peptides protective against s. pneumoniae and compositions, methods and uses relating thereto
A 61K 39/12	EP 2307047*	RESPIRATORY SYNCYTIAL VIRUS RENDERS DENDRITIC CELLS TOLEROGENIC
A 61K 39/12	EP 2307048*	HIV VACCINE BASED ON TARGETING MAXIMIZED GAG AND NEF TO DENDRITIC CELLS
A 61K 39/12	EP 2318042*	VACCINE AGAINST HPV
A 61K 39/165	EP 2303322*	RECOMBINANT MODIFIED VACCINIA VIRUS MEASLES VACCINE
A 61K 39/23	EP 2297185*	PARVOVIRAL CAPSID WITH INCORPORATED GLY-ALA REPEAT REGION
A 61K 39/29	EP 2293813*	NANOEMULSION VACCINES
A 61K 39/38	EP 2293814*	NANOEMULSION ADJUVANTS
A 61K 39/38	EP 2300052*	NOVEL SYNERGISTIC EFFECTS
A 61K 39/39	EP 1977762	CTGF AS TARGET FOR THE THERAPY OF DIABETIC NEPHROPATHY
A 61K 39/39	EP 2228073	Pharmaceutical compositions containing monoclonal anti idiotypic anti-ca-125 antibody and aluminium derivatives
A 61K 39/39	EP 2300609*	NOVEL IMMUNOADJUVANT FLAGELLIN-BASED COMPOUNDS AND USE THEREOF
A 61K 39/395	EP 1977762	CTGF AS TARGET FOR THE THERAPY OF DIABETIC NEPHROPATHY
A 61K 39/395	EP 2081962*	NOVEL ANTI-NOTCH3 ANTIBODIES AND THEIR USE IN THE DETECTION AND DIAGNOSIS OF DISEASE
A 61K 39/395	EP 2228073	Pharmaceutical compositions containing monoclonal anti idiotypic anti-ca-125 antibody and aluminium derivatives
A 61K 39/395	EP 2236519	Human GM-CSF antigen binding proteins
A 61K 39/395	EP 2294087*	ANTI-HEPCIDIN ANTIBODIES AND METHODS OF USE
A 61K 39/395	EP 2297204*	ANTI-CD8 ANTIBODIES BLOCK PRIMING OF CYTOTOXIC EFFECTORS AND LEAD TO GENERATION OF REGULATORY CD8+T CELLS
A 61K 39/395	EP 2297206*	ANTI-CXCR4 ANTIBODIES

(51)	Број објаве европске пријаве патента	(51)
A 61K 39/395	EP 2300494*	ANTI-AMYLOID IMMUNOGENIC COMPOSITIONS, METHODS AND USES
A 61K 39/395	EP 2301576	Therapeutic use of Anti-CS1 Antibodies
A 61K 39/395	EP 2303923*	HUMAN CYTOMEGALOVIRUS NEUTRALISING ANTIBODIES AND USE THEREOF
A 61K 39/395	EP 2307048*	HIV VACCINE BASED ON TARGETING MAXIMIZED GAG AND NEF TO DENDRITIC CELLS
A 61K 39/395	EP 2307051*	NOTCH-BINDING AGENTS AND ANTAGONISTS AND METHODS OF USE THEREOF
A 61K 39/395	EP 2307456*	ANG-2 INHIBITION TO TREAT MULTIPLE SCLEROSIS
A 61K 39/395	EP 2307459*	NOTCH1 RECEPTOR BINDING AGENTS AND METHODS OF USE THEREOF
A 61K 39/395	EP 2313109*	IL6 IMMUNOTHERAPEUTICS
A 61K 39/395	EP 2314620	Binding molecules capable of neutralizing rabies virus and uses thereof
A 61K 39/395	EP 2314621	Binding molecules capable of neutralizing rabies virus and uses thereof
A 61K 39/395	EP 2315601*	COMBINATION OF A C-MET ANTAGONIST AND AN AMINOHETEROARYL COMPOUND FOR THE TREATMENT OF CANCER
A 61K 39/395	EP 2315779*	COMPOSITIONS COMPRISING ANTIBODIES TO LINGO OR FRAGMENTS THEREOF
A 61K 39/395	EP 2318048*	STRUCTURAL VARIANTS OF ANTIBODIES FOR IMPROVED THERAPEUTIC CHARACTERISTICS
A 61K 39/395	EP 2318437*	METHOD FOR TREATING MULTIPLE SCLEROSIS PATIENTS WITH ANTI-IL2R ANTIBODIES
A 61K 39/395	EP 2318442*	TREATMENT OF AUTOIMMUNE AND INFLAMMATORY DISEASE
A 61K 39/395	EP 2319868	Immunotherapeutic treatment for inducing the regression of atherosclerotic plaques
A 61K 45/00	EP 2308509	INHIBITOR OF ANALGESIC TOLERANCE
A 61K 45/00	EP 2322223	THERAPEUTIC AGENT FOR MIGRAINE
A 61K 45/06	EP 2293790*	COMBINATION OF A NICOTINIC RECEPTOR PARTIAL AGONIST AND OF AN ACETYLCHOLINESTERASE INHIBITOR, PHARMACEUTICAL COMPOSITION CONTAINING SAME AND USE THEREOF IN THE TREATMENT OF COGNITIVE DISORDERS
A 61K 45/06	EP 2296640*	METHODS FOR PREVENTING THE DEVELOPMENT OF RETINOPATHY BY THE ORAL ADMINISTRATION OF NNR LIGANDS
A 61K 45/06	EP 2298297	Combination of an inhibitor of the If current of the sinus node and an inhibitor of the angiotensin converting enzyme
A 61K 45/06	EP 2300023*	MICROORGANISMS FOR PREVENTING AND TREATING NEOPLASMS ACCOMPANYING CELLULAR THERAPY
A 61K 45/06	EP 2303274*	MULTIPLE MYELOMA TREATMENTS
A 61K 45/06	EP 2306999*	COMPOSITIONS FOR TREATING ROSACEA
A 61K 47/00	EP 2320945*	STABLE ANTHRAX VACCINE FORMULATIONS
A 61K 47/02	EP 2313054*	FOAMING SKINCARE CREAM
A 61K 47/02	EP 2315580*	PHARMACEUTICAL FORMULATIONS AND METHODS FOR TREATING RESPIRATORY TRACT INFECTIONS
A 61K 47/10	EP 1980272	Orally-disintegrating tablet and manufacturing method thereof
A 61K 47/10	EP 2306977*	METHOD AND COMPOSITION FOR TREATING OCULAR HYPERTENSION AND GLAUCOMA
A 61K 47/10	EP 2310053*	PHARMACEUTICAL COMPOSITIONS COMPRISING A COMPLEX OF AMINOCYCLOHEXANE DERIVATIVES AND CYCLODEXTRIN
A 61K 47/12	EP 2298276	Accelerating agent of calcium absorption
A 61K 47/12	EP 2303233*	SOLID ORAL DOSAGE FORM CONTAINING ANTI-PLATELET AGENT CLOPIDOGREL AND METHOD FOR THE PREPARATION THEREOF
A 61K 47/12	EP 2306972*	ACETIC ACID AND A BUFFER

(51)	Број објаве европске пријаве патента	(51)
A 61K 47/12	EP 2306999*	COMPOSITIONS FOR TREATING ROSACEA
A 61K 47/12	EP 2309985*	PHARMACEUTICAL COMPOSITION
A 61K 47/12	EP 2310053*	PHARMACEUTICAL COMPOSITIONS COMPRISING A COMPLEX OF AMINOCYCLOHEXANE DERIVATIVES AND CYCLODEXTRIN
A 61K 47/12	EP 2315580*	PHARMACEUTICAL FORMULATIONS AND METHODS FOR TREATING RESPIRATORY TRACT INFECTIONS
A 61K 47/14	EP 2299987*	CAPSULE PHARMACEUTICAL DOSAGE FORM COMPRISING A SUSPENSION FORMULATION OF AN INDOLINONE DERIVATIVE
A 61K 47/14	EP 2313087*	PHARMACEUTICAL DOSAGE FORM FOR IMMEDIATE RELEASE OF AN INDOLINONE DERIVATIVE
A 61K 47/14	EP 2320872*	PROCESS FOR PREPARING MICROPARTICLES
A 61K 47/16	EP 2309990*	DRUG LOADED POLYMERIC NANOPARTICLES AND METHODS OF MAKING AND USING SAME
A 61K 47/18	EP 2306977*	METHOD AND COMPOSITION FOR TREATING OCULAR HYPERTENSION AND GLAUCOMA
A 61K 47/24	EP 2299987*	CAPSULE PHARMACEUTICAL DOSAGE FORM COMPRISING A SUSPENSION FORMULATION OF AN INDOLINONE DERIVATIVE
A 61K 47/24	EP 2313087*	PHARMACEUTICAL DOSAGE FORM FOR IMMEDIATE RELEASE OF AN INDOLINONE DERIVATIVE
A 61K 47/26	EP 2306977*	METHOD AND COMPOSITION FOR TREATING OCULAR HYPERTENSION AND GLAUCOMA
A 61K 47/34	EP 2299976*	CONTROLLED RELEASE AURIS SENSORY CELL MODULATOR COMPOSITIONS AND METHODS FOR THE TREATMENT OF OTIC DISORDERS
A 61K 47/34	EP 2299979*	CONTROLLED RELEASE ANTIMICROBIAL COMPOSITIONS AND METHODS FOR THE TREATMENT OF OTIC DISORDERS
A 61K 47/34	EP 2303227*	CONTROLLED RELEASE CORTICOSTEROID COMPOSITIONS AND METHODS FOR THE TREATMENT OF OTIC DISORDERS
A 61K 47/34	EP 2306975*	CONTROLLED-RELEASE OTIC STRUCTURE MODULATING AND INNATE IMMUNE SYSTEM MODULATING COMPOSITIONS AND METHODS FOR THE TREATMENT OF OTIC DISORDERS
A 61K 47/34	EP 2309989*	DRUG LOADED POLYMERIC NANOPARTICLES AND METHODS OF MAKING AND USING SAME
A 61K 47/34	EP 2309990*	DRUG LOADED POLYMERIC NANOPARTICLES AND METHODS OF MAKING AND USING SAME
A 61K 47/34	EP 2309991*	THERAPEUTIC POLYMERIC NANOPARTICLES COMPRISING VINCA ALKALOIDS AND METHODS OF MAKING AND USING SAME
A 61K 47/34	EP 2313115*	POLYMERIC DELIVERY SYSTEMS FOR ACTIVE AGENTS
A 61K 47/36	EP 2303229*	CONCENTRATED OXALIPLATIN SOLUTION AND ITS METHOD OF PREPARATION
A 61K 47/36	EP 2306999*	COMPOSITIONS FOR TREATING ROSACEA
A 61K 47/36	EP 2307031*	FILM-FORMING LIQUID FORMULATIONS FOR DRUG RELEASE TO HAIR AND SCALP
A 61K 47/36	EP 2309985*	PHARMACEUTICAL COMPOSITION
A 61K 47/38	EP 2309985*	PHARMACEUTICAL COMPOSITION
A 61K 47/40	EP 2303229*	CONCENTRATED OXALIPLATIN SOLUTION AND ITS METHOD OF PREPARATION
A 61K 47/44	EP 2299987*	CAPSULE PHARMACEUTICAL DOSAGE FORM COMPRISING A SUSPENSION FORMULATION OF AN INDOLINONE DERIVATIVE
A 61K 47/44	EP 2313087*	PHARMACEUTICAL DOSAGE FORM FOR IMMEDIATE RELEASE OF AN INDOLINONE DERIVATIVE
A 61K 47/44	EP 2317984*	ARTICLES OF MANUFACTURE RELEASING AN ACTIVE INGREDIENT

(51)	Број објаве европске пријаве патента	(51)
A 61K 47/48	EP 2079486*	EFFICIENT SYNTHESIS OF CHELATORS FOR NUCLEAR IMAGING AND RADIOTHERAPY: COMPOSITIONS AND APPLICATIONS
A 61K 47/48	EP 2134371*	OLIGOMER-OPIOID AGONIST CONJUGATES
A 61K 47/48	EP 2293818*	CONJUGATES OF A CHOLINESTERASE MOIETY AND A POLYMER
A 61K 47/48	EP 2303332*	ANTHRACYCLINE DERIVATIVE CONJUGATES, PROCESS FOR THEIR PREPARATION AND THEIR USE AS ANTITUMOR COMPOUNDS
A 61K 47/48	EP 2305309	CONJUGATES FOR THE ADMINISTRATION OF BIOLOGICALLY ACTIVE COMPOUNDS
A 61K 47/48	EP 2310053*	PHARMACEUTICAL COMPOSITIONS COMPRISING A COMPLEX OF AMINOCYCLOHEXANE DERIVATIVES AND CYCLODEXTRIN
A 61K 47/48	EP 2319542	Segmented degradable polymers and conjugates made therefrom
A 61K 48/00	EP 2114153*	TREATMENT AND PREVENTION OF NEURODEGENERATIVE DISEASES USING GENE THERAPY
A 61K 48/00	EP 2228071	Intra-vascular kidney gene therapy with plasmid encoding BMP-7
A 61K 48/00	EP 2297185*	PARVOVIRAL CAPSID WITH INCORPORATED GLY-ALA REPEAT REGION
A 61K 48/00	EP 2304034*	AN ADAPTER MOLECULE FOR THE DELIVERY OF ADENOVIRUS VECTORS
A 61K 49/00	EP 2079486*	EFFICIENT SYNTHESIS OF CHELATORS FOR NUCLEAR IMAGING AND RADIOTHERAPY: COMPOSITIONS AND APPLICATIONS
A 61K 49/00	EP 2303001*	METHOD FOR TESTING EFFICACY OF TREATMENT OF NEUROLOGIC DISORDERS
A 61K 49/00	EP 2303114*	RADIOPHARMACEUTICAL IMAGING OF NEURODEGENERATIVE DISEASES
A 61K 49/00	EP 2319869	ANTIBODY AGAINST OXIDIZED LDL/ß²GPI COMPLEX AND USE OF THE SAME
A 61K 51/04	EP 2079486*	EFFICIENT SYNTHESIS OF CHELATORS FOR NUCLEAR IMAGING AND RADIOTHERAPY: COMPOSITIONS AND APPLICATIONS
A 61K 51/04	EP 2320956*	RADIOLABELLED TRP M8 RECEPTOR LIGANDS
A 61K 51/08	EP 2313430*	MUTEINS OF HNGAL AND RELATED PROTEINS WITH AFFINITY FOR A GIVEN TARGET
A 61L 2/00	EP 2300058*	CLEANING TOOL
A 61L 2/00	EP 2306972*	ACETIC ACID AND A BUFFER
A 61L 2/18	EP 2135507	DISINFECTANT
A 61L 9/00	EP 2300058*	CLEANING TOOL
A 61L 15/22	EP 2317984*	ARTICLES OF MANUFACTURE RELEASING AN ACTIVE INGREDIENT
A 61L 15/34	EP 2317984*	ARTICLES OF MANUFACTURE RELEASING AN ACTIVE INGREDIENT
A 61L 15/42	EP 2317984*	ARTICLES OF MANUFACTURE RELEASING AN ACTIVE INGREDIENT
A 61L 27/22	EP 2306985*	CONTROLLED RELEASE COMPOSITIONS OF AGENTS THAT REDUCE CIRCULATING LEVELS OF PLATELETS AND METHODS THEREFOR
A 61L 29/16	EP 2322235	Drug releasing coatings for medical devices
A 61L 31/06	EP 2293914*	METHOD FOR MOULDING POLY(1,4-DIOXANONE)
A 61L 31/16	EP 2322235	Drug releasing coatings for medical devices
A 61M 1/36	EP 2311810	AMIDINE DERIVATIVE
A 61M 16/00	EP 2319568	Device for moistening breathed air for artificial respiration
A 61M 16/16	EP 2319568	Device for moistening breathed air for artificial respiration
A 61M 31/00	EP 2125095*	APPLICATOR FOR THE USE OF BIRTH GEL FOR HUMAN BIRTH
A 61M 37/00	EP 2317984*	ARTICLES OF MANUFACTURE RELEASING AN ACTIVE INGREDIENT

(51)	Број објаве европске пријаве патента	(51)
A 61N 1/00	EP 2129428*	IMPLANTABLE AUDITORY STIMULATION SYSTEMS HAVING A TRANSDUCER AND A TRANSDUCTION MEDIUM
A 61N 1/02	EP 2296635*	ARTIFICIAL OXYGEN CARRIERS AND USE THEREOF
A 61N 1/16	EP 2227992	Body designed in the style of a textile cover or pacifier
A 61N 1/34	EP 2263744	Assembly arrangement for a bandage holding a transcutaneous electrical nerve stimulation device
A 61N 1/36	EP 2263744	Assembly arrangement for a bandage holding a transcutaneous electrical nerve stimulation device
A 61N 1/36	EP 2300098*	METHOD OF EYE TREATMENT FOR PREVENTION OF PRESBYOPIA AND GLAUCOMA, AND MEANS FOR CARRYING OUT SAID TREATMENT
A 61P 1/00	EP 2300009*	ORAL ADMINISTRATION OF PERIPHERALLY-ACTING OPIOID ANTAGONISTS
A 61P 1/00	EP 2300422*	AZETIDINES AND CYCLOBUTANES AS HISTAMINE H3 RECEPTOR ANTAGONISTS
A 61P 1/00	EP 2303289*	MONO (IRON HYDROXYPYRONE) AND COMBINATION (IRON HYDROXYPYRONE AND GI INFLAMMATION INHIBITING AGENTS) COMPOSITIONS FOR ANAEMIA OR H. PYLORI INFECTIONS
A 61P 1/00	EP 2313392*	AZETIDINE POLYSUBSTITUTED COMPOUNDS, PREPARATION THEREOF, AND THERAPEUTIC APPLICATION THEREOF
A 61P 1/00	EP 2313393*	AZETIDINE POLYSUBSTITUTED COMPOUNDS, PREPARATION THEREOF, AND THERAPEUTIC APPLICATION THEREOF
A 61P 1/00	EP 2315756*	1,2,5-OXADIAZOLES AS INHIBITORS OF INDOLEAMINE 2,3-DIOXYGENASE
A 61P 1/02	EP 2296612*	THERAPEUTIC AND PROPHYLACTIC FORMULATION FOR ORAL CARE
A 61P 1/04	EP 2141150	BICYCLIC COMPOUND AND PHARMACEUTICAL USE THEREOF
A 61P 1/14	EP 2121683*	2-PIPERAZIN-1-YL-3H-IMIDAZO[4,5-B]PYRIDINE DERIVATIVES
A 61P 1/16	EP 2101809*	PHARMACEUTICAL COMPOSITION CONTAINING ARAZYME FOR THE PREVENTION OF LIVER DYSFUNCTION
A 61P 1/16	EP 2293795*	PHARMACEUTICAL COMBINATION
A 61P 1/16	EP 2303262*	DPP-IV INHIBITORS FOR USE IN THE TREATMENT OF NAFLD
A 61P 3/00	EP 2112151	Haloaryl substituted aminopurines, compositions thereof, and methods of treatment therewith
A 61P 3/00	EP 2125715*	PROCESS FOR THE PREPARATION OF EZETIMIBE AND DERIVATIVES THEREOF
A 61P 3/00	EP 2289893	Haloaryl substituted aminopurines, compositions thereof, and methods of treatment therewith
A 61P 3/00	EP 2297144*	IMIDAZOPYRIDINE AND RELATED ANALOGS AS SIRTUIN MODULATORS
A 61P 3/00	EP 2309983*	PHARMACEUTICAL FORM COMPRISING TETRAHYDROBIOPTERIN
A 61P 3/00	EP 2310366*	NOVEL TRIAZOLO(4,3-A)PYRIDINE DERIVATIVES, PROCESS FOR THE PREPARATION THEREOF, USE THEREOF AS MEDICAMENTS, PHARMACEUTICAL COMPOSITIONS AND NOVEL USE, IN PARTICULAR AS MET INHIBITORS
A 61P 3/00	EP 2318032*	USE OF HSP70 AS A REGULATOR OF ENZYMATIC ACTIVITY
A 61P 3/00	EP 2322150	Method of identifying GLP-1 secretagogues
A 61P 3/00	EP 2322151	Sustained release formulation comprising a GPR119 agonist and a DPP-IV inhibitor
A 61P 3/00	EP 2322152	Method of preparing a composition comprising a GPR119 agonist

(51)	Број објаве европске пријаве патента	(51)
A 61P 3/00	EP 2322156	Composition for the treatment of diabetes and conditions related thereto and for the treatment of conditions ameliorated by increasing a blood GLP-1 level
A 61P 3/00	EP 2322157	Composition for the treatment of diabetes and conditions related thereto and for the treatment of conditions ameliorated by increasing a blood GLP-1 level
A 61P 3/04	EP 2094262*	PHARMACEUTICAL COMPOSITION CONTAINING PHENANTHRENEQUINONE-BASED COMPOUND FOR INTESTINE DELIVERY SYSTEM
A 61P 3/04	EP 2099448*	PHARMACEUTICAL COMPOSITION FOR TREATMENT AND PREVENTION OF RESTENOSIS
A 61P 3/04	EP 2099449*	PHARMACEUTICAL COMPOSITION FOR THE TREATMENT AND PREVENTION OF DISEASES INVOLVING IMPOTENCE
A 61P 3/04	EP 2101757*	COMPOUND FOR TREATMENT OR PREVENTION OF PROSTATE-RELATED DISEASES AND PHARMACEUTICAL COMPOSITION OF COLON DELIVERY SYSTEM CONTAINING THE SAME
A 61P 3/04	EP 2133333	New azabicyclic derivatives, method of preparing same and pharmaceutical compositions containing them
A 61P 3/04	EP 2298747	TRIAZOLE DERIVATIVE OR SALT THEREOF
A 61P 3/04	EP 2310374*	SUBSTITUTED 6- (1-PIPERAZINYL) -PYRIDAZINES AS 5-HT6 RECEPTOR ANTAGONISTS
A 61P 3/04	EP 2313090*	NOVEL SULPHUR CONTAINING LIPIDS FOR USE AS FOOD SUPPLEMENT OR AS MEDICAMENT
A 61P 3/04	EP 2318355*	1,1'-DIADAMANTYL CARBOXYLIC ACIDS, MEDICAMENTS CONTAINING SUCH COMPOUNDS AND THEIR USE
A 61P 3/04	EP 2321287*	4,5-DIHYDRO-OXAZOL-2-YL DERIVATIVES
A 61P 3/04	EP 2322162	5HT2C receptor modulator compositions and methods of use
A 61P 3/06	EP 2009153496	PPAR AGONIST COMPOUNDS AND PREPARATION AND USES THEREOF FOR TREATING DIABETES AND/OR DYSLIPIDEMIA
A 61P 3/06	EP 2141150	BICYCLIC COMPOUND AND PHARMACEUTICAL USE THEREOF
A 61P 3/06	EP 2298747	TRIAZOLE DERIVATIVE OR SALT THEREOF
A 61P 3/06	EP 2310371*	PPAR AGONIST COMPOUNDS AND PREPARATION AND USES THEREOF FOR TREATING DIABETES AND/OR DYSLIPIDEMIA
A 61P 3/06	EP 2321287*	4,5-DIHYDRO-OXAZOL-2-YL DERIVATIVES
A 61P 3/10	EP 2009153496	PPAR AGONIST COMPOUNDS AND PREPARATION AND USES THEREOF FOR TREATING DIABETES AND/OR DYSLIPIDEMIA
A 61P 3/10	EP 2094262*	PHARMACEUTICAL COMPOSITION CONTAINING PHENANTHRENEQUINONE-BASED COMPOUND FOR INTESTINE DELIVERY SYSTEM
A 61P 3/10	EP 2099448*	PHARMACEUTICAL COMPOSITION FOR TREATMENT AND PREVENTION OF RESTENOSIS
A 61P 3/10	EP 2099449*	PHARMACEUTICAL COMPOSITION FOR THE TREATMENT AND PREVENTION OF DISEASES INVOLVING IMPOTENCE
A 61P 3/10	EP 2101757*	COMPOUND FOR TREATMENT OR PREVENTION OF PROSTATE-RELATED DISEASES AND PHARMACEUTICAL COMPOSITION OF COLON DELIVERY SYSTEM CONTAINING THE SAME
A 61P 3/10	EP 2141150	BICYCLIC COMPOUND AND PHARMACEUTICAL USE THEREOF
A 61P 3/10	EP 2293795*	PHARMACEUTICAL COMBINATION
A 61P 3/10	EP 2297131*	DI-SUBSTITUTED PHENYL COMPOUNDS AS PHOSPHODIESTERASE 10 INHIBITORS
A 61P 3/10	EP 2298747	TRIAZOLE DERIVATIVE OR SALT THEREOF

(51)	Број објаве европске пријаве патента	(51)
A 61P 3/10	EP 2300046*	SUPER FAST-ACTING INSULIN COMPOSITIONS
A 61P 3/10	EP 2301543	A PHARMACEUTICAL COMPOSITION FOR TREATING DIABETES
A 61P 3/10	EP 2307047*	RESPIRATORY SYNCYTIAL VIRUS RENDERS DENDRITIC CELLS TOLEROGENIC
A 61P 3/10	EP 2308886	CRYSTAL OF SPIROKETAL DERIVATIVE, AND PROCESS FOR PRODUCTION THEREOF
A 61P 3/10	EP 2310371*	PPAR AGONIST COMPOUNDS AND PREPARATION AND USES THEREOF FOR TREATING DIABETES AND/OR DYSLIPIDEMIA
A 61P 3/10	EP 2318355*	1,1'-DIADAMANTYL CARBOXYLIC ACIDS, MEDICAMENTS CONTAINING SUCH COMPOUNDS AND THEIR USE
A 61P 3/10	EP 2318415*	OXAZOLOPYRIMIDINES AS EDG-1 RECEPTOR AGONISTS
A 61P 3/10	EP 2321287*	4,5-DIHYDRO-OXAZOL-2-YL DERIVATIVES
A 61P 3/10	EP 2321295*	4-(PYRIDIN-4-YL)-1H-[1,3,5]TRIAZIN-2-ONE DERIVATIVES AS GSK3-BETA INHIBITORS FOR THE TREATMENT OF NEURODEGENERATIVE DISEASES
A 61P 3/10	EP 2322150	Method of identifying GLP-1 secretagogues
A 61P 3/10	EP 2322151	Sustained release formulation comprising a GPR119 agonist and a DPP-IV inhibitor
A 61P 3/10	EP 2322152	Method of preparing a composition comprising a GPR119 agonist
A 61P 3/10	EP 2322156	Composition for the treatment of diabetes and conditions related thereto and for the treatment of conditions ameliorated by increasing a blood GLP-1 level
A 61P 3/10	EP 2322157	Composition for the treatment of diabetes and conditions related thereto and for the treatment of conditions ameliorated by increasing a blood GLP-1 level
A 61P 3/12	EP 2068819*	DENDRIMER COMPOSITIONS
A 61P 3/12	EP 2294087*	ANTI-HEPCIDIN ANTIBODIES AND METHODS OF USE
A 61P 5/00	EP 2141150	BICYCLIC COMPOUND AND PHARMACEUTICAL USE THEREOF
A 61P 5/00	EP 2310028*	SUPPRESSION OF NEUROENDOCRINE DISEASES
A 61P 5/06	EP 2317979*	PHARMACEUTICAL COMPOSITIONS OF SOMATOTROPHIC HORMONES
A 61P 5/28	EP 2297177*	C-RING-SUBSTITUTED PREGN-4-ENE-21,17-CARBOLACTONE, AND PHARMACEUTICAL PREPARATIONS COMPRISING THE LATTER
A 61P 5/30	EP 2307439*	ESTRATRIENE DERIVATIVES COMPRISING HETEROCYCLIC BIOISOSTERES FOR THE PHENOLIC A-RING
A 61P 5/34	EP 2297177*	C-RING-SUBSTITUTED PREGN-4-ENE-21,17-CARBOLACTONE, AND PHARMACEUTICAL PREPARATIONS COMPRISING THE LATTER
A 61P 5/42	EP 2297177*	C-RING-SUBSTITUTED PREGN-4-ENE-21,17-CARBOLACTONE, AND PHARMACEUTICAL PREPARATIONS COMPRISING THE LATTER
A 61P 5/44	EP 2300472*	GLUCOCORTICOID MIMETICS, METHODS OF MAKING THEM, PHARMACEUTICAL COMPOSITIONS, AND USES THEREOF
A 61P 5/44	EP 2318427*	GLUCOCORTICOIDS ATTACHED TO NITRATE ESTERS VIA AN AROMATIC LINKER IN POSITION 21 AND THEIR USE IN OPHTHALMOLOGY
A 61P 5/46	EP 2300472*	GLUCOCORTICOID MIMETICS, METHODS OF MAKING THEM, PHARMACEUTICAL COMPOSITIONS, AND USES THEREOF
A 61P 5/50	EP 2300046*	SUPER FAST-ACTING INSULIN COMPOSITIONS
A 61P 7/00	EP 2300462*	MACROCYCLIC UREA AND SULFAMIDE DERIVATIVES AS INHIBITORS OF TAFIA
A 61P 7/00	EP 2306999*	COMPOSITIONS FOR TREATING ROSACEA
A 61P 7/02	EP 2297116*	SUBSTITUTED QUINAZOLINES

(51)	Број објаве европске пријаве патента	(51)
A 61P 7/02	EP 2297159*	SUBSTITUTED QUINAZOLINES
A 61P 7/02	EP 2310366*	NOVEL TRIAZOLO(4,3-A)PYRIDINE DERIVATIVES, PROCESS FOR THE PREPARATION THEREOF, USE THEREOF AS MEDICAMENTS, PHARMACEUTICAL COMPOSITIONS AND NOVEL USE, IN PARTICULAR AS MET INHIBITORS
A 61P 7/02	EP 2315593*	USE OF IDRABIOTAPARINUX FOR DECREASING THE INCIDENCE OF BLEEDINGS DURING AN ANTITHROMBOTIC TREATMENT
A 61P 7/02	EP 2318415*	OXAZOLOPYRIMIDINES AS EDG-1 RECEPTOR AGONISTS
A 61P 7/02	EP 2321301*	NEW HETEROCYCLIC CARBOXAMIDES FOR USE AS THROMBIN INHIBITORS
A 61P 7/04	EP 2311810	AMIDINE DERIVATIVE
A 61P 7/06	EP 2294087*	ANTI-HEPCIDIN ANTIBODIES AND METHODS OF USE
A 61P 7/06	EP 2303289*	MONO (IRON HYDROXYPYRONE) AND COMBINATION (IRON HYDROXYPYRONE AND GI INFLAMMATION INHIBITING AGENTS) COMPOSITIONS FOR ANAEMIA OR H. PYLORI INFECTIONS
A 61P 7/10	EP 2141150	BICYCLIC COMPOUND AND PHARMACEUTICAL USE THEREOF
A 61P 7/12	EP 2141150	BICYCLIC COMPOUND AND PHARMACEUTICAL USE THEREOF
A 61P 9/00	EP 2059508*	5,6-BISARYL-2-PYRIDINE-CARBOXAMIDE DERIVATIVES, PREPARATION AND APPLICATION THEREOF IN THERAPEUTICS AS UROTENSIN II RECEPTOR ANTAGONISTS
A 61P 9/00	EP 2074108*	RENIN INHIBITORS
A 61P 9/00	EP 2079486*	EFFICIENT SYNTHESIS OF CHELATORS FOR NUCLEAR IMAGING AND RADIOTHERAPY: COMPOSITIONS AND APPLICATIONS
A 61P 9/00	EP 2101575*	ACE2 ACTIVATOR COMPOUNDS AND METHODS OF USE THEREOF
A 61P 9/00	EP 2112151	Haloaryl substituted aminopurines, compositions thereof, and methods of treatment therewith
A 61P 9/00	EP 2114920*	SUBSTITUTED ISOQUINOLINE AND ISOQUINOLINONE DERIVATIVES
A 61P 9/00	EP 2141150	BICYCLIC COMPOUND AND PHARMACEUTICAL USE THEREOF
A 61P 9/00	EP 2289893	Haloaryl substituted aminopurines, compositions thereof, and methods of treatment therewith
A 61P 9/00	EP 2293795*	PHARMACEUTICAL COMBINATION
A 61P 9/00	EP 2300422*	AZETIDINES AND CYCLOBUTANES AS HISTAMINE H3 RECEPTOR ANTAGONISTS
A 61P 9/00	EP 2300423*	SUBSTITUTED 7-SULFANYLMETHYL, 7-SULFINYLMETHYL AND 7-SULFONYLMETHYL INDOLES AND USE THEREOF
A 61P 9/00	EP 2303270*	ACYLAMINO-SUBSTITUTED FUSED CYCLOPENTANECARBOXYLIC ACID DERIVATIVES AND THEIR USE AS PHARMACEUTICALS
A 61P 9/00	EP 2303310*	COMPOSITIONS AND METHODS FOR USING CELLS TO TREAT HEART TISSUE
A 61P 9/00	EP 2303842*	A PROCESS FOR PRODUCING LERCANIDIPINE HC1 FORM V
A 61P 9/00	EP 2303845*	BI-AND POLYCYCLIC SUBSTITUTED ISOQUINOLINE AND ISOQUINOLINE DERIVATIVES AS RHO KINASE INHIBITORS
A 61P 9/00	EP 2303846*	SUBSTITUTED ISOQUINOLINES AND ISOQUINOLINONES AS RHO KINASE INHIBITORS

(51)	Број објаве европске пријаве патента	(51)
A 61P 9/00	EP 2310041*	UNACYLATED GHRELIN AND ANALOGS AS THERAPEUTIC AGENTS FOR VASCULAR REMODELING IN DIABETIC PATIENTS AND TREATMENT OF CARDIOVASCULAR DISEASE
A 61P 9/00	EP 2313399*	THIOPHENE OR THIAZOLE DERIVATIVES AND THEIR USE AS PI3K INHIBITORS
A 61P 9/02	EP 2297142*	NOVEL SUBSTITUTED PYRIDIN-2-ONES AND PYRIDAZIN-3-ONES
A 61P 9/04	EP 2280702*	USE OF DRONEDARONE OR A PHARMACEUTICALLY ACCEPTABLE SALT THEREOF, FOR THE PREPARATION OF A MEDICAMENT FOR REGULATING THE POTASSIUM LEVEL IN THE BLOOD
A 61P 9/04	EP 2317987*	EPROSARTAN COMPOSITIONS
A 61P 9/04	EP 2318415*	OXAZOLOPYRIMIDINES AS EDG-1 RECEPTOR AGONISTS
A 61P 9/06	EP 2079486*	EFFICIENT SYNTHESIS OF CHELATORS FOR NUCLEAR IMAGING AND RADIOTHERAPY: COMPOSITIONS AND APPLICATIONS
A 61P 9/06	EP 2300001*	DRONEDARONE FOR THE PREVENTION OF PERMANENT ATRIAL FIBRILLATION
A 61P 9/06	EP 2300425*	CYCLOALKANE[B]INDOLE ANGTAGONISTS OF PROSTAGLANDIN D2 RECEPTORS
A 61P 9/06	EP 2303259*	DRONEDARONE FOR THE PREVENTION OF CARDIOVERSION
A 61P 9/10	EP 2079486*	EFFICIENT SYNTHESIS OF CHELATORS FOR NUCLEAR IMAGING AND RADIOTHERAPY: COMPOSITIONS AND APPLICATIONS
A 61P 9/10	EP 2141150	BICYCLIC COMPOUND AND PHARMACEUTICAL USE THEREOF
A 61P 9/10	EP 2303251*	NEW COMBINATION FOR USE IN THE TREATMENT OF INFLAMMATORY DISORDERS
A 61P 9/10	EP 2313090*	NOVEL SULPHUR CONTAINING LIPIDS FOR USE AS FOOD SUPPLEMENT OR AS MEDICAMENT
A 61P 9/10	EP 2318415*	OXAZOLOPYRIMIDINES AS EDG-1 RECEPTOR AGONISTS
A 61P 9/10	EP 2319868	Immunotherapeutic treatment for inducing the regression of atherosclerotic plaques
A 61P 9/12	EP 2101575*	ACE2 ACTIVATOR COMPOUNDS AND METHODS OF USE THEREOF
A 61P 9/12	EP 2141150	BICYCLIC COMPOUND AND PHARMACEUTICAL USE THEREOF
A 61P 9/12	EP 2298297	Combination of an inhibitor of the If current of the sinus node and an inhibitor of the angiotensin converting enzyme
A 61P 9/12	EP 2298747	TRIAZOLE DERIVATIVE OR SALT THEREOF
A 61P 9/12	EP 2310385*	SOLID PHARMACEUTICAL COMPOSITION
A 61P 9/12	EP 2313374*	6-SUBSTITUTED ISOQUINOLINES AND ISOQUINOLINONES
A 61P 9/12	EP 2315592*	TREATMENT OF PULMONARY ARTERIAL HYPERTENSION
A 61P 9/12	EP 2317987*	EPROSARTAN COMPOSITIONS
A 61P 9/12	EP 2318415*	OXAZOLOPYRIMIDINES AS EDG-1 RECEPTOR AGONISTS
A 61P 9/14	EP 2318415*	OXAZOLOPYRIMIDINES AS EDG-1 RECEPTOR AGONISTS
A 61P 11/00	EP 2101575*	ACE2 ACTIVATOR COMPOUNDS AND METHODS OF USE THEREOF
A 61P 11/00	EP 2293805*	LOZENGE COMPOSITION FOR TREATING INFLAMMATORY DISEASES OF THE MOUTH AND PHARYNX
A 61P 11/00	EP 2300422*	AZETIDINES AND CYCLOBUTANES AS HISTAMINE H3 RECEPTOR ANTAGONISTS
A 61P 11/00	EP 2300443*	TRIAZOLE DERIVATIVES USEFUL FOR THE TREATMENT OF DISEASES
A 61P 11/00	EP 2300464*	QUINUCLIDINE DERIVATIVES AS MUSCARINIC M3 RECEPTOR ANTAGONISTS

(51)	Број објаве европске пријаве патента	(51)
A 61P 11/00	EP 2303873*	BENZOXAZINONE DERIVATIVES ACTING AS BETA2-ADRENORECEPTOR AGONIST FOR THE TREATMENT OF RESPIRATORY DISORDERS
A 61P 11/00	EP 2307362*	ANTAGONISTS OF PROSTAGLANDIN D2 RECEPTORS
A 61P 11/00	EP 2308491	Pirfenidone therapy and inducers of cytochrome P450
A 61P 11/00	EP 2310392*	TRICYCLIC ANTAGONISTS OF PROSTAGLANDIN D2 RECEPTORS
A 61P 11/00	EP 2313392*	AZETIDINE POLYSUBSTITUTED COMPOUNDS, PREPARATION THEREOF, AND THERAPEUTIC APPLICATION THEREOF
A 61P 11/00	EP 2313393*	AZETIDINE POLYSUBSTITUTED COMPOUNDS, PREPARATION THEREOF, AND THERAPEUTIC APPLICATION THEREOF
A 61P 11/00	EP 2313404*	QUINUCLIDINE CARBONATE DERIVATIVES AND MEDICINAL COMPOSITION THEREOF
A 61P 11/00	EP 2315756*	1,2,5-OXADIAZOLES AS INHIBITORS OF INDOLEAMINE 2,3-DIOXYGENASE
A 61P 11/00	EP 2318415*	OXAZOLOPYRIMIDINES AS EDG-1 RECEPTOR AGONISTS
A 61P 11/00	EP 2320878*	MONOTERPENES FOR TREATING RESPIRATORY TRACT DISEASES, IN PARTICULAR BRONCHOPULMONARY DISEASES
A 61P 11/06	EP 2293795*	PHARMACEUTICAL COMBINATION
A 61P 11/06	EP 2303287*	ANTIALLERGIC MARINE BIOPOLYMERS
A 61P 11/06	EP 2310366*	NOVEL TRIAZOLO(4,3-A)PYRIDINE DERIVATIVES, PROCESS FOR THE PREPARATION THEREOF, USE THEREOF AS MEDICAMENTS, PHARMACEUTICAL COMPOSITIONS AND NOVEL USE, IN PARTICULAR AS MET INHIBITORS
A 61P 11/06	EP 2314567	Inhibitors of the microsomal prostaglandin E2 synthase-1
A 61P 11/06	EP 2319840	AMINOPROPYLIDENE DERIVATIVE
A 61P 11/06	EP 2320878*	MONOTERPENES FOR TREATING RESPIRATORY TRACT DISEASES, IN PARTICULAR BRONCHOPULMONARY DISEASES
A 61P 11/08	EP 2141150	BICYCLIC COMPOUND AND PHARMACEUTICAL USE THEREOF
A 61P 11/08	EP 2320878*	MONOTERPENES FOR TREATING RESPIRATORY TRACT DISEASES, IN PARTICULAR BRONCHOPULMONARY DISEASES
A 61P 13/02	EP 2305641	SULFONAMIDE COMPOUND OR SALT THEREOF
A 61P 13/02	EP 2317991*	USE OF OPIOID ANTAGONISTS FOR TREATING URINARY RETENTION
A 61P 13/08	EP 2305641	SULFONAMIDE COMPOUND OR SALT THEREOF
A 61P 13/10	EP 2305641	SULFONAMIDE COMPOUND OR SALT THEREOF
A 61P 13/10	EP 2310387*	A PROCESS FOR THE PREPARATION OF SOLIFENACIN SALTS AND THEIR INCLUSION INTO PHARMACEUTICAL DOSAGE FORMS
A 61P 13/12	EP 1977762	CTGF AS TARGET FOR THE THERAPY OF DIABETIC NEPHROPATHY
A 61P 13/12	EP 2101575*	ACE2 ACTIVATOR COMPOUNDS AND METHODS OF USE THEREOF
A 61P 13/12	EP 2228071	Intra-vascular kidney gene therapy with plasmid encoding BMP-7
A 61P 13/12	EP 2303306*	DEVELOPMENT OF A C-REACTIVE PROTEIN MUTANT WITH IMPROVED THERAPEUTIC BENEFIT IN IMMUNE THROMBOCYTOPENIA AND LUPUS NEPHRITIS
A 61P 13/12	EP 2317987*	EPROSARTAN COMPOSITIONS
A 61P 13/12	EP 2318415*	OXAZOLOPYRIMIDINES AS EDG-1 RECEPTOR AGONISTS
A 61P 15/00	EP 2141150	BICYCLIC COMPOUND AND PHARMACEUTICAL USE THEREOF
A 61P 15/00	EP 2297131*	DI-SUBSTITUTED PHENYL COMPOUNDS AS PHOSPHODIESTERASE 10 INHIBITORS

(51)	Број објаве европске пријаве патента	(51)
A 61P 15/08	EP 2141150	BICYCLIC COMPOUND AND PHARMACEUTICAL USE THEREOF
A 61P 17/00	EP 2310041*	UNACYLATED GHRELIN AND ANALOGS AS THERAPEUTIC AGENTS FOR VASCULAR REMODELING IN DIABETIC PATIENTS AND TREATMENT OF CARDIOVASCULAR DISEASE
A 61P 17/00	EP 2315756*	1,2,5-OXADIAZOLES AS INHIBITORS OF INDOLEAMINE 2,3-DIOXYGENASE
A 61P 17/00	EP 2317984*	ARTICLES OF MANUFACTURE RELEASING AN ACTIVE INGREDIENT
A 61P 17/02	EP 2296639*	EMOLLIENT COMPOSITION FOR THE PREVENTIVE TREATMENT OF ATOPIC DERMATITIS
A 61P 17/02	EP 2318034*	WOUND HEALING
A 61P 17/06	EP 2293795*	PHARMACEUTICAL COMBINATION
A 61P 17/06	EP 2296639*	EMOLLIENT COMPOSITION FOR THE PREVENTIVE TREATMENT OF ATOPIC DERMATITIS
A 61P 17/06	EP 2310366*	NOVEL TRIAZOLO(4,3-A)PYRIDINE DERIVATIVES, PROCESS FOR THE PREPARATION THEREOF, USE THEREOF AS MEDICAMENTS, PHARMACEUTICAL COMPOSITIONS AND NOVEL USE, IN PARTICULAR AS MET INHIBITORS
A 61P 17/12	EP 2315581*	TOPICAL COMPOSITION FOR THE TREATMENT OF ACTINIC KERATOSIS
A 61P 17/14	EP 2321313*	SUBSTITUTED PYRIMIDO [2, 1-A]ISOQUINOLIN-4-ONE DERIVATIVES
A 61P 19/00	EP 2307351*	NOVEL SALTS OF (4-{[(5-{[(3-CHLOROPHENYL)METHYL]OXY}-2-METHYLPHENYL)CARBONYL]AMINO}-3-METHYLPHENYL)ACETIC ACID
A 61P 19/00	EP 2307363*	PIPERIDYL ACRYLAMIDE ANTOGONISTS OF CCR2
A 61P 19/00	EP 2308482	Novel use of peptide compounds for treating muscle pain
A 61P 19/00	EP 2315756*	1,2,5-OXADIAZOLES AS INHIBITORS OF INDOLEAMINE 2,3-DIOXYGENASE
A 61P 19/02	EP 2293795*	PHARMACEUTICAL COMBINATION
A 61P 19/02	EP 2303268*	PHARMACEUTICAL COMPOSITIONS BASED ON KININ B2 RECEPTOR ANTAGONISTS AND CORTICOSTEROIDS, AND THEIR USE
A 61P 19/02	EP 2303306*	DEVELOPMENT OF A C-REACTIVE PROTEIN MUTANT WITH IMPROVED THERAPEUTIC BENEFIT IN IMMUNE THROMBOCYTOPENIA AND LUPUS NEPHRITIS
A 61P 19/02	EP 2307047*	RESPIRATORY SYNCYTIAL VIRUS RENDERS DENDRITIC CELLS TOLEROGENIC
A 61P 19/02	EP 2307426*	FUSED PYRAZINE COMPOUNDS USEFUL FOR THE TREATMENT OF DEGENERATIVE AND INFLAMMATORY DISEASES
A 61P 19/02	EP 2310366*	NOVEL TRIAZOLO(4,3-A)PYRIDINE DERIVATIVES, PROCESS FOR THE PREPARATION THEREOF, USE THEREOF AS MEDICAMENTS, PHARMACEUTICAL COMPOSITIONS AND NOVEL USE, IN PARTICULAR AS MET INHIBITORS
A 61P 19/02	EP 2314567	Inhibitors of the microsomal prostaglandin E2 synthase-1
A 61P 19/02	EP 2320928*	TREATMENT OF RHEUMATOID ARTHRITIS WITH MAMMAL BETA DEFENSINS
A 61P 19/10	EP 2141150	BICYCLIC COMPOUND AND PHARMACEUTICAL USE THEREOF
A 61P 19/10	EP 2298747	TRIAZOLE DERIVATIVE OR SALT THEREOF
A 61P 19/10	EP 2300461*	CYCLIC INHIBITORS OF 11BETA-HYDROXYSTEROID DEHYDROGENASE 1
A 61P 21/00	EP 2293793*	2,5-DISUBSTITUTED IMIDAZO[4,5-C]PYRIDINES FOR TREATING MUSCULAR DYSTROPHY

(51)	Број објаве европске пријаве патента	(51)
A 61P 21/00	EP 2303262*	DPP-IV INHIBITORS FOR USE IN THE TREATMENT OF NAFLD
A 61P 21/00	EP 2308482	Novel use of peptide compounds for treating muscle pain
A 61P 21/00	EP 2310366*	NOVEL TRIAZOLO(4,3-A)PYRIDINE DERIVATIVES, PROCESS FOR THE PREPARATION THEREOF, USE THEREOF AS MEDICAMENTS, PHARMACEUTICAL COMPOSITIONS AND NOVEL USE, IN PARTICULAR AS MET INHIBITORS
A 61P 21/00	EP 2313414*	KINASE INHIBITORS AND METHODS OF USE
A 61P 25/00	EP 2118067*	NICOTINIC ACETYLCHOLINE RECEPTOR MODULATORS
A 61P 25/00	EP 2133333	New azabicyclic derivatives, method of preparing same and pharmaceutical compositions containing them
A 61P 25/00	EP 2297131*	DI-SUBSTITUTED PHENYL COMPOUNDS AS PHOSPHODIESTERASE 10 INHIBITORS
A 61P 25/00	EP 2297152*	ANHYDROUS CRYSTAL FORM OF ORVEPITANT MALEATE
A 61P 25/00	EP 2298764	4-Oxadiazolyl-piperidine compounds and use thereof
A 61P 25/00	EP 2298765	4-Oxadiazolyl-piperidine compounds and use thereof
A 61P 25/00	EP 2300422*	AZETIDINES AND CYCLOBUTANES AS HISTAMINE H3 RECEPTOR ANTAGONISTS
A 61P 25/00	EP 2300452*	5-[5-[2-(3,5-BIS(TRIFLUOROMETHYL)PHENYL)-2-METHYLPROPANOYLMETHYLAMINO]-4-(4-FLUORO-2-METHYLPHENYL)]-2-PYRIDINYL-2-ALKYL-PROLINAMIDE AS NK1 RECEPTOR ANTAGONISTS
A 61P 25/00	EP 2300473*	FUMARATE SALT OF 4-BROMOPHENYL 1,4-DIAZABICYCLO[3.2.2]NONANE-4-CARBOXYLATE, CRYSTALLINE FORMS THEREOF, PREPARATION THEREOF AND THERAPEUTIC USE THEREOF
A 61P 25/00	EP 2303845*	BI-AND POLYCYCLIC SUBSTITUTED ISOQUINOLINE AND ISOQUINOLINE DERIVATIVES AS RHO KINASE INHIBITORS
A 61P 25/00	EP 2303846*	SUBSTITUTED ISOQUINOLINES AND ISOQUINOLINONES AS RHO KINASE INHIBITORS
A 61P 25/00	EP 2303851*	NOVEL PHENOLIC AND CATECHOLIC AMINES AND PRODRUGS THEREOF
A 61P 25/00	EP 2303872*	ISOXAZOLE DERIVATIVES AND THEIR USE AS METABOTROPIC GLUTAMATE RECEPTOR POTENTIATORS
A 61P 25/00	EP 2303884*	ADENINE RECEPTOR LIGANDS
A 61P 25/00	EP 2307042*	MODULATION OF THE TRPV : VPS10P-DOMAIN RECEPTOR SYSTEM FOR THE TREATMENT OF PAIN
A 61P 25/00	EP 2307374*	PIPERAZIN-1-YL-TRIFLUOROMETHYL-SUBSTITUTED-PYRIDINES AS FAST DISSOCIATING DOPAMINE 2 RECEPTOR ANTAGONISTS
A 61P 25/00	EP 2307416*	SUBSTITUTED TRICYCLIC DERIVATIVES AGAINST NEURODEGENERATIVE DISEASES
A 61P 25/00	EP 2308870	2-oxo-1-pyrrolidine deriatives, processes for preparing them and their uses
A 61P 25/00	EP 2310356*	ADAMANTYL DIAMIDE DERIVATIVES AND USES OF SAME
A 61P 25/00	EP 2310366*	NOVEL TRIAZOLO(4,3-A)PYRIDINE DERIVATIVES, PROCESS FOR THE PREPARATION THEREOF, USE THEREOF AS MEDICAMENTS, PHARMACEUTICAL COMPOSITIONS AND NOVEL USE, IN PARTICULAR AS MET INHIBITORS
A 61P 25/00	EP 2311807	Compounds and composition as protein kinase inhibitors
A 61P 25/00	EP 2313376*	SUBSTITUTED 1-BENZYL-CINNOLIN-4(1H)-ONE DERIVATIVES, PREPARATION THEREOF, AND THERAPEUTIC USE THEREOF

(51)	Број објаве европске пријаве патента	(51)
A 61P 25/00	EP 2313392*	AZETIDINE POLYSUBSTITUTED COMPOUNDS, PREPARATION THEREOF, AND THERAPEUTIC APPLICATION THEREOF
A 61P 25/00	EP 2313393*	AZETIDINE POLYSUBSTITUTED COMPOUNDS, PREPARATION THEREOF, AND THERAPEUTIC APPLICATION THEREOF
A 61P 25/00	EP 2315756*	1,2,5-OXADIAZOLES AS INHIBITORS OF INDOLEAMINE 2,3-DIOXYGENASE
A 61P 25/00	EP 2318442*	TREATMENT OF AUTOIMMUNE AND INFLAMMATORY DISEASE
A 61P 25/00	EP 2321287*	4,5-DIHYDRO-OXAZOL-2-YL DERIVATIVES
A 61P 25/00	EP 2321313*	SUBSTITUTED PYRIMIDO [2, 1-A]ISOQUINOLIN-4-ONE DERIVATIVES
A 61P 25/00	EP 2321314*	SUBSTITUTED PYRIMIDONE DERIVATIVES
A 61P 25/00	EP 2321315*	SUBSTITUTED ALKYL PYRIMIDIN-4-ONE DERIVATIVES
A 61P 25/00	EP 2321316*	SUBSTITUTED PYRIMIDIN-4-ONE DERIVATIVES
A 61P 25/00	EP 2321324*	CRYSTALLINE FORMS OF A PYRIDINE DERIVATIVE
A 61P 25/02	EP 2196200	Cyclohexenone derivative for treating or preventing hypesthesia or hyperesthesia caused by diabetes
A 61P 25/02	EP 2293795*	PHARMACEUTICAL COMBINATION
A 61P 25/04	EP 2196200	Cyclohexenone derivative for treating or preventing hypesthesia or hyperesthesia caused by diabetes
A 61P 25/04	EP 2300009*	ORAL ADMINISTRATION OF PERIPHERALLY-ACTING OPIOID ANTAGONISTS
A 61P 25/04	EP 2308509	INHIBITOR OF ANALGESIC TOLERANCE
A 61P 25/04	EP 2308869	AZOLE COMPOUND
A 61P 25/06	EP 2322223	THERAPEUTIC AGENT FOR MIGRAINE
A 61P 25/14	EP 2141150	BICYCLIC COMPOUND AND PHARMACEUTICAL USE THEREOF
A 61P 25/16	EP 2061772*	MULTI-FUNCTIONAL SMALL MOLECULES AS ANTI-PROLIFERATIVE AGENTS
A 61P 25/16	EP 2141150	BICYCLIC COMPOUND AND PHARMACEUTICAL USE THEREOF
A 61P 25/16	EP 2298281	Infusion and injection solution of Levodopa
A 61P 25/16	EP 2300004*	COMPOSITIONS AND METHODS RELATING TO HEAT SHOCK TRANSCRIPTION FACTOR ACTIVATING COMPOUNDS AND TARGETS THEREOF
A 61P 25/16	EP 2310032*	COMPOUNDS FOR TREATING SYMPTOMS ASSOCIATED WITH PARKINSON'S DISEASE
A 61P 25/16	EP 2310033*	COMPOUNDS FOR TREATING AMYLOIDOSES
A 61P 25/18	EP 2141150	BICYCLIC COMPOUND AND PHARMACEUTICAL USE THEREOF
A 61P 25/18	EP 2297133*	1, 2 DISUBSTITUTED HETEROCYCLIC COMPOUNDS
A 61P 25/18	EP 2297167*	SELENOPHENE AND SELENAZOLE CARBOXYLIC ACID DERIVATIVES
A 61P 25/18	EP 2300473*	FUMARATE SALT OF 4-BROMOPHENYL 1,4-DIAZABICYCLO[3.2.2]NONANE-4-CARBOXYLATE, CRYSTALLINE FORMS THEREOF, PREPARATION THEREOF AND THERAPEUTIC USE THEREOF
A 61P 25/18	EP 2303863*	5- AND 6-MEMBERED HETEROCYCLIC COMPOUNDS
A 61P 25/18	EP 2307389*	DIBENZOTHIAZEPINE DERIVATIVES AND USE THEREOF
A 61P 25/18	EP 2313391*	ISOQUINOLINONE DERIVATIVES AS NK3 ANTAGONISTS
A 61P 25/22	EP 2300474*	SPIRO (PIPERIDINE-4, 2 ' -PYRROLIDINE) -1- (3, 5-TRIFLUOROMETHYL PHENYL) METHYLCARBOXAMIDES AS NK1 TACHIKYNIN RECEPTOR ANTAGONISTS
A 61P 25/24	EP 2295050	Use of agomelatine for the preparation of medicaments for the treatment of sleep disorders in depressed patients
A 61P 25/24	EP 2297167*	SELENOPHENE AND SELENAZOLE CARBOXYLIC ACID DERIVATIVES

(51)	Број објаве европске пријаве патента	(51)
A 61P 25/24	EP 2300474*	SPIRO (PIPERIDINE-4, 2 ' -PYRROLIDINE) -1- (3, 5-TRIFLUOROMETHYL PHENYL) METHYLCARBOXAMIDES AS NK1 TACHIKYNIN RECEPTOR ANTAGONISTS
A 61P 25/24	EP 2301527	Association of agomelatine with a mood stabilizer, and pharmaceutical compositions comprising them
A 61P 25/24	EP 2307389*	DIBENZOTHIAZEPINE DERIVATIVES AND USE THEREOF
A 61P 25/28	EP 2061772*	MULTI-FUNCTIONAL SMALL MOLECULES AS ANTI-PROLIFERATIVE AGENTS
A 61P 25/28	EP 2111105*	METHOD OF DELAYING THE ONSET OF CLINICALLY DEFINITE MULTIPLE SCLEROSIS
A 61P 25/28	EP 2293790*	COMBINATION OF A NICOTINIC RECEPTOR PARTIAL AGONIST AND OF AN ACETYLCHOLINESTERASE INHIBITOR, PHARMACEUTICAL COMPOSITION CONTAINING SAME AND USE THEREOF IN THE TREATMENT OF COGNITIVE DISORDERS
A 61P 25/28	EP 2296636*	POLYELECTROLYTE-ENCAPSULATED GOLD NANOPARTICLES CAPABLE OF CROSSING BLOOD-BRAIN BARRIER
A 61P 25/28	EP 2297120*	AMINODIHYDROTHIAZINE DERIVATIVES AS BACE INHIBITORS FOR THE TREATMENT OF ALZHEIMER'S DISEASE
A 61P 25/28	EP 2297167*	SELENOPHENE AND SELENAZOLE CARBOXYLIC ACID DERIVATIVES
A 61P 25/28	EP 2298747	TRIAZOLE DERIVATIVE OR SALT THEREOF
A 61P 25/28	EP 2300004*	COMPOSITIONS AND METHODS RELATING TO HEAT SHOCK TRANSCRIPTION FACTOR ACTIVATING COMPOUNDS AND TARGETS THEREOF
A 61P 25/28	EP 2300473*	FUMARATE SALT OF 4-BROMOPHENYL 1,4-DIAZABICYCLO[3.2.2]NONANE-4-CARBOXYLATE, CRYSTALLINE FORMS THEREOF, PREPARATION THEREOF AND THERAPEUTIC USE THEREOF
A 61P 25/28	EP 2300484*	NOVEL CLASS OF SPIRO PIPERIDINES FOR THE TREATMENT OF NEURODEGENERATIVE DISEASES
A 61P 25/28	EP 2305672	SULFUR-CONTAINING HETEROCYCLIC DERIVATIVE HAVING ß-SECRETASE-INHIBITING ACTIVITY
A 61P 25/28	EP 2310032*	COMPOUNDS FOR TREATING SYMPTOMS ASSOCIATED WITH PARKINSON'S DISEASE
A 61P 25/28	EP 2310033*	COMPOUNDS FOR TREATING AMYLOIDOSES
A 61P 25/28	EP 2310034*	COMPOUNDS FOR TREATING BETA-AMYLOIDOSES
A 61P 25/28	EP 2318415*	OXAZOLOPYRIMIDINES AS EDG-1 RECEPTOR AGONISTS
A 61P 25/28	EP 2318437*	METHOD FOR TREATING MULTIPLE SCLEROSIS PATIENTS WITH ANTI-IL2R ANTIBODIES
A 61P 25/28	EP 2321278*	PYRIDINYL MODULATORS OF y-SECRETASE
A 61P 25/28	EP 2321286*	SUBSTITUTED N-OXIDE PYRAZINE DERIVATIVES
A 61P 25/28	EP 2321295*	4-(PYRIDIN-4-YL)-1H-[1,3,5]TRIAZIN-2-ONE DERIVATIVES AS GSK3-BETA INHIBITORS FOR THE TREATMENT OF NEURODEGENERATIVE DISEASES
A 61P 25/28	EP 2321321*	TRIAZOLO [4, 5-D]PYRAMIDINE DERIVATIVES AND THEIR USE AS PURINE RECEPTOR ANTAGONISTS
A 61P 25/30	EP 2300479*	NALMEFENE HYDROCHLORIDE DIHYDRATE
A 61P 25/32	EP 2307420*	NALMEFENE DI-ESTER PRODRUGS
A 61P 25/36	EP 2318372*	LARGE SUBSTITUENT, NON-PHENOLIC AMINE OPIOIDS
A 61P 27/00	EP 2303845*	BI-AND POLYCYCLIC SUBSTITUTED ISOQUINOLINE AND ISOQUINOLINE DERIVATIVES AS RHO KINASE INHIBITORS
A 61P 27/00	EP 2303846*	SUBSTITUTED ISOQUINOLINES AND ISOQUINOLINONES AS RHO KINASE INHIBITORS

(51)	Број објаве европске пријаве патента	(51)
A 61P 27/00	EP 2310366*	NOVEL TRIAZOLO(4,3-A)PYRIDINE DERIVATIVES, PROCESS FOR THE PREPARATION THEREOF, USE THEREOF AS MEDICAMENTS, PHARMACEUTICAL COMPOSITIONS AND NOVEL USE, IN PARTICULAR AS MET INHIBITORS
A 61P 27/00	EP 2313092*	POLYUNSATURATED FATTY ACIDS FOR IMPROVING VISION
A 61P 27/00	EP 2315756*	1,2,5-OXADIAZOLES AS INHIBITORS OF INDOLEAMINE 2,3-DIOXYGENASE
A 61P 27/02	EP 2293795*	PHARMACEUTICAL COMBINATION
A 61P 27/02	EP 2296640*	METHODS FOR PREVENTING THE DEVELOPMENT OF RETINOPATHY BY THE ORAL ADMINISTRATION OF NNR LIGANDS
A 61P 27/02	EP 2318427*	GLUCOCORTICOIDS ATTACHED TO NITRATE ESTERS VIA AN AROMATIC LINKER IN POSITION 21 AND THEIR USE IN OPHTHALMOLOGY
A 61P 27/06	EP 2298747	TRIAZOLE DERIVATIVE OR SALT THEREOF
A 61P 27/14	EP 2303287*	ANTIALLERGIC MARINE BIOPOLYMERS
A 61P 27/16	EP 2296632*	CONTROLLED-RELEASE APOPTOSIS MODULATING COMPOSITIONS AND METHODS FOR THE TREATMENT OF OTIC DISORDERS
A 61P 27/16	EP 2299976*	CONTROLLED RELEASE AURIS SENSORY CELL MODULATOR COMPOSITIONS AND METHODS FOR THE TREATMENT OF OTIC DISORDERS
A 61P 27/16	EP 2299979*	CONTROLLED RELEASE ANTIMICROBIAL COMPOSITIONS AND METHODS FOR THE TREATMENT OF OTIC DISORDERS
A 61P 27/16	EP 2303227*	CONTROLLED RELEASE CORTICOSTEROID COMPOSITIONS AND METHODS FOR THE TREATMENT OF OTIC DISORDERS
A 61P 27/16	EP 2306975*	CONTROLLED-RELEASE OTIC STRUCTURE MODULATING AND INNATE IMMUNE SYSTEM MODULATING COMPOSITIONS AND METHODS FOR THE TREATMENT OF OTIC DISORDERS
A 61P 27/16	EP 2310034*	COMPOUNDS FOR TREATING BETA-AMYLOIDOSES
A 61P 27/16	EP 2315586*	1-AMINO-ALKYLCYCLOHEXANE DERIVATIVES FOR THE TREATMENT OF SLEEP DISORDERS
A 61P 29/00	EP 2073816*	BORONIC ACIDS AND ESTERS AS INHIBITORS OF FATTY ACID AMIDE HYDROLASE
A 61P 29/00	EP 2124563*	BENZIMIDAZOLE TRPV1 INHIBITORS
A 61P 29/00	EP 2300428*	AMINOPYRIDINE DERIVATIVES
A 61P 29/00	EP 2300440*	3,4-DIHYDROPYRIMIDINE TRPA1 ANTAGONISTS
A 61P 29/00	EP 2300443*	TRIAZOLE DERIVATIVES USEFUL FOR THE TREATMENT OF DISEASES
A 61P 29/00	EP 2300474*	SPIRO (PIPERIDINE-4, 2 ' -PYRROLIDINE) -1- (3, 5-TRIFLUOROMETHYL PHENYL) METHYLCARBOXAMIDES AS NK1 TACHIKYNIN RECEPTOR ANTAGONISTS
A 61P 29/00	EP 2303251*	NEW COMBINATION FOR USE IN THE TREATMENT OF INFLAMMATORY DISORDERS
A 61P 29/00	EP 2303270*	ACYLAMINO-SUBSTITUTED FUSED CYCLOPENTANECARBOXYLIC ACID DERIVATIVES AND THEIR USE AS PHARMACEUTICALS
A 61P 29/00	EP 2303850*	NOVEL POTASSIUM CHANNEL BLOCKERS AND USES THEREOF
A 61P 29/00	EP 2303884*	ADENINE RECEPTOR LIGANDS
A 61P 29/00	EP 2307364*	ISOINDOLONE DERIVATIVES AS MEK KINASE INHIBITORS AND METHODS OF USE
A 61P 29/00	EP 2307397*	6-SUBSTITUTED PHENOXYCHROMAN CARBOXYLIC ACID DERIVATIVES
A 61P 29/00	EP 2310359*	ORGANIC COMPOUNDS

(51)	Број објаве европске пријаве патента	(51)
A 61P 29/00	EP 2310392*	TRICYCLIC ANTAGONISTS OF PROSTAGLANDIN D2 RECEPTORS
A 61P 29/00	EP 2313399*	THIOPHENE OR THIAZOLE DERIVATIVES AND THEIR USE AS PI3K INHIBITORS
A 61P 29/00	EP 2313414*	KINASE INHIBITORS AND METHODS OF USE
A 61P 29/00	EP 2314567	Inhibitors of the microsomal prostaglandin E2 synthase-1
A 61P 29/00	EP 2314589	Process for preparing oxycodone hydrochloride having less than 25ppm 14-hydroxycodeinone
A 61P 29/00	EP 2315756*	1,2,5-OXADIAZOLES AS INHIBITORS OF INDOLEAMINE 2,3-DIOXYGENASE
A 61P 29/00	EP 2316837	Process for preparing oxycodone hydrochloride having less than 25ppm 14-hydroxycodeinone
A 61P 29/00	EP 2318372*	LARGE SUBSTITUENT, NON-PHENOLIC AMINE OPIOIDS
A 61P 29/00	EP 2318415*	OXAZOLOPYRIMIDINES AS EDG-1 RECEPTOR AGONISTS
A 61P 29/00	EP 2318419*	BORONATE ESTER COMPOUNDS AND PHARMACEUTICAL COMPOSITIONS THEREOF
A 61P 29/00	EP 2319840	AMINOPROPYLIDENE DERIVATIVE
A 61P 29/00	EP 2319846	Process for preparing oxycodone hydrochloride having less than 25ppm 14-hydroxycodeinone
A 61P 29/00	EP 2320905*	NOVEL ADENINE DERIVATIVES
A 61P 31/00	EP 2311807	Compounds and composition as protein kinase inhibitors
A 61P 31/00	EP 2315756*	1,2,5-OXADIAZOLES AS INHIBITORS OF INDOLEAMINE 2,3-DIOXYGENASE
A 61P 31/02	EP 2135507	DISINFECTANT
A 61P 31/02	EP 2318415*	OXAZOLOPYRIMIDINES AS EDG-1 RECEPTOR AGONISTS
A 61P 31/04	EP 2099759*	ANTIBACTERIAL QUINOLINE DERIVATIVES
A 61P 31/04	EP 2297147*	AZABICYCLIC COMPOUNDS, PREPARATION THEREOF AND USE OF SAME AS DRUGS, ESPECIALLY BETA-LACTAMASE INHIBITORS
A 61P 31/04	EP 2299979*	CONTROLLED RELEASE ANTIMICROBIAL COMPOSITIONS AND METHODS FOR THE TREATMENT OF OTIC DISORDERS
A 61P 31/04	EP 2300463*	HETEROCYCLIC UREA DERIVATIVES FOR THE TREATMENT OF BACTERIAL INFECTIONS
A 61P 31/04	EP 2313402*	HETEROCYCLIC UREA DERIVATIVES AND METHODS OF USE THEREOF
A 61P 31/04	EP 2321272*	ORGANIC COMPOUNDS
A 61P 31/06	EP 2300476*	TRICYCLIC NITROGEN CONTAINING COMPOUNDS AND THEIR USE AS ANTIBACTERIALS
A 61P 31/10	EP 2318396*	A CRYSTALLINE FORM OF POSACONAZOLE
A 61P 31/10	EP 2321313*	SUBSTITUTED PYRIMIDO [2, 1-A]ISOQUINOLIN-4-ONE DERIVATIVES
A 61P 31/12	EP 2263676	Compositions for inhibiting or treating Hepatitis C viruses
A 61P 31/12	EP 2307047*	RESPIRATORY SYNCYTIAL VIRUS RENDERS DENDRITIC CELLS TOLEROGENIC
A 61P 31/14	EP 2310095*	MACROCYCLIC QUINOXALINE COMPOUNDS AS HCV NS3 PROTEASE INHIBITORS
A 61P 31/14	EP 2310396*	MACROCYCLIC INDOLE DERIVATIVES USEFUL AS HEPATITIS C VIRUS INHIBITORS
A 61P 31/14	EP 2314620	Binding molecules capable of neutralizing rabies virus and uses thereof
A 61P 31/14	EP 2314621	Binding molecules capable of neutralizing rabies virus and uses thereof
A 61P 31/16	EP 2294084*	MONOCLONAL ANTIBODIES HAVING HOMOSUBTYPE CROSS -NEUTRALIZATION PROPERTIES AGAINST INFLUENZA A VIRUSES SUBTYPE H1
A 61P 33/00	EP 2314292	Endoparasiticidal compositions
A 61P 33/06	EP 2321295*	4-(PYRIDIN-4-YL)-1H-[1,3,5]TRIAZIN-2-ONE DERIVATIVES AS GSK3-BETA INHIBITORS FOR THE TREATMENT OF NEURODEGENERATIVE DISEASES
A 61P 33/10	EP 2314292	Endoparasiticidal compositions

(51)	Број објаве европске пријаве патента	(51)
A 61P 35/00	EP 2063895*	COMBINATION DRUG
A 61P 35/00	EP 2069348*	NOVEL PYRAZOLOPYRIMIDINES AS CYCLIN DEPENDENT KINASE INHIBITORS
A 61P 35/00	EP 2069349*	PYRAZOLOPYRIMIDINES AS CYCLIN DEPENDENT KINASE INHIBITORS
A 61P 35/00	EP 2069350*	NOVEL PYRAZOLOPYRIMIDINES AS CYCLIN DEPENDENT KINASE INHIBITORS
A 61P 35/00	EP 2079486*	EFFICIENT SYNTHESIS OF CHELATORS FOR NUCLEAR IMAGING AND RADIOTHERAPY: COMPOSITIONS AND APPLICATIONS
A 61P 35/00	EP 2081962*	NOVEL ANTI-NOTCH3 ANTIBODIES AND THEIR USE IN THE DETECTION AND DIAGNOSIS OF DISEASE
A 61P 35/00	EP 2084162*	BICYCLIC TRIAZOLES AS PROTEIN KINASE MODULATORS
A 61P 35/00	EP 2101731*	ENDOXIFEN METHODS AND COMPOSITIONS
A 61P 35/00	EP 2111867	Novel formulations of tumour-associated peptides binding to human leukocyte antigen (HLA) class I or II molecules for vaccines
A 61P 35/00	EP 2114431*	A COMPOSITION CONTAINING ARAZYME FOR THE PREVENTION AND TREATMENT OF CANCER
A 61P 35/00	EP 2116542	SOLID OF MACROLIDE COMPOUND, METHOD FOR PRODUCTION THEREOF, AND PHARMACEUTICAL COMPOSITION COMPRISING THE SAME
A 61P 35/00	EP 2119706	PYRIDINE OR PYRIMIDINE DERIVATIVE HAVING EXCELLENT CELL GROWTH INHIBITION EFFECT AND EXCELLENT ANTI-TUMOR EFFECT ON CELL STRAIN HAVING AMPLIFICATION OF HGFR GENE
A 61P 35/00	EP 2134680*	INHIBITORS OF HISTONE DEACETYLASE
A 61P 35/00	EP 2189461	Crystalline irinotecan hydrochloride and methods for the preparation thereof
A 61P 35/00	EP 2293795*	PHARMACEUTICAL COMBINATION
A 61P 35/00	EP 2295416	Triazole compounds that modulate HSP90 activity
A 61P 35/00	EP 2296663*	COMBINATIONS COMPRISING METHOTREXATE AND DHODH INHIBITORS
A 61P 35/00	EP 2297206*	ANTI-CXCR4 ANTIBODIES
A 61P 35/00	EP 2298748	Triazole compounds that modulate HSP90 activity
A 61P 35/00	EP 2299971*	SOLID PHARMACEUTICAL FORMULATIONS COMPRISING BIBW 2992
A 61P 35/00	EP 2300004*	COMPOSITIONS AND METHODS RELATING TO HEAT SHOCK TRANSCRIPTION FACTOR ACTIVATING COMPOUNDS AND TARGETS THEREOF
A 61P 35/00	EP 2300023*	MICROORGANISMS FOR PREVENTING AND TREATING NEOPLASMS ACCOMPANYING CELLULAR THERAPY
A 61P 35/00	EP 2300441*	CRYSTALLINE SALT FORMS OF ANTIFOLATE COMPOUNDS AND METHODS OF MANUFACTURING THEREOF
A 61P 35/00	EP 2300455*	SALTS OF 2-FLUORO-N-METHYL-4-[7-(QUINOLIN-6-YL-METHYL) - IMIDAZO [1, 2-B] [1, 2, 4] TRIAZIN-2-YL] BENZAMIDE AND PROCESSES RELATED TO PREPARING THE SAME
A 61P 35/00	EP 2300457*	SUBSTITUTED PYRROLES AND METHODS OF USE
A 61P 35/00	EP 2300465*	IMIDAZOPYRIDINE DERIVATIVES AS INHIBITORS OF RECEPTOR TYROSINE KINASES
A 61P 35/00	EP 2300475*	DIAZACARBAZOLES AND METHODS OF USE
A 61P 35/00	EP 2300483*	TRIAZINE COMPOUNDS AS P13 KINASE AND MTOR INHIBITORS
A 61P 35/00	EP 2301576	Therapeutic use of Anti-CS1 Antibodies
A 61P 35/00	EP 2303274*	MULTIPLE MYELOMA TREATMENTS
A 61P 35/00	EP 2303276*	FUMARATE SALT OF 4- (3-CHLORO-2-FLUOROANILINO) - 7-METHOXY-6- { [1- (N-METHYLCARBAMOYLMETHYL) PIPERIDIN- 4-YL]OXY}QUINAZOLINE

(51)	Број објаве европске пријаве патента	(51)
A 61P 35/00	EP 2303332*	ANTHRACYCLINE DERIVATIVE CONJUGATES, PROCESS FOR THEIR PREPARATION AND THEIR USE AS ANTITUMOR COMPOUNDS
A 61P 35/00	EP 2303861*	PYRIDINE COMPOUNDS
A 61P 35/00	EP 2303875*	COMPOSITIONS WITH AND PROCESS FOR METHYLMORPHOLIN-SUBSITUTED PYRIDO[2,3-D]PYRIMIDINES
A 61P 35/00	EP 2303880*	NOVEL TRICYCLIC DERIVATIVES, PROCESS FOR THE PREPARATION THEREOF AND PHARMACEUTICAL COMPOSITIONS CONTAINING SAME
A 61P 35/00	EP 2303882*	AZACARBOLINE DERIVATIVES, PREPARATION METHOD THEREOF AND THERAPEUTIC USE OF SAME
A 61P 35/00	EP 2305221	Dna damage repair inhibitors for treatment of cancer
A 61P 35/00	EP 2305642	Bis(thio-hydrazide amide) salts for treatment of cancers
A 61P 35/00	EP 2307003*	COMBINATION THERAPY WITH PM00104 AND ANOTHER ANTITUMOR AGENT
A 61P 35/00	EP 2307041*	DOSING REGIMEN
A 61P 35/00	EP 2307364*	ISOINDOLONE DERIVATIVES AS MEK KINASE INHIBITORS AND METHODS OF USE
A 61P 35/00	EP 2307367*	NOVEL INHIBITORS OF PROLIFERATION AND ACTIVATION OF SIGNAL TRANSDUCER AND ACTIVATOR OF TRANSCRIPTION (STATS)
A 61P 35/00	EP 2307400*	INHIBITORS OF PI3 KINASE
A 61P 35/00	EP 2307401*	ANTINEOPLASTIC DERIVATIVES OF 4-OXO-1,4-DIHYDRO-QUINOLINE, PREPARATION THEREOF, AND THERAPEUTIC USE THEREOF
A 61P 35/00	EP 2307409*	PYRROLOPYRIDINES AS KINASE INHIBITORS
A 61P 35/00	EP 2307416*	SUBSTITUTED TRICYCLIC DERIVATIVES AGAINST NEURODEGENERATIVE DISEASES
A 61P 35/00	EP 2309991*	THERAPEUTIC POLYMERIC NANOPARTICLES COMPRISING VINCA ALKALOIDS AND METHODS OF MAKING AND USING SAME
A 61P 35/00	EP 2310010*	CHEMICAL COMPOUNDS 251
A 61P 35/00	EP 2310020*	NOVEL ACETATES OF 2-DEOXY MONOSACCHARIDES WITH ANTICANCER ACTIVITY
A 61P 35/00	EP 2310028*	SUPPRESSION OF NEUROENDOCRINE DISEASES
A 61P 35/00	EP 2310029*	SUPPRESSION OF CANCERS
A 61P 35/00	EP 2310366*	NOVEL TRIAZOLO(4,3-A)PYRIDINE DERIVATIVES, PROCESS FOR THE PREPARATION THEREOF, USE THEREOF AS MEDICAMENTS, PHARMACEUTICAL COMPOSITIONS AND NOVEL USE, IN PARTICULAR AS MET INHIBITORS
A 61P 35/00	EP 2310373*	BICYCLIC HETEROCYCLES AS MEK KINASE INHIBITORS
A 61P 35/00	EP 2310382*	AMIDOPHENOXYINDAZOLES USEFUL AS INHIBITORS OF C-MET
A 61P 35/00	EP 2310389*	HETEROCYCLES AS PROTEIN KINASE INHIBITORS
A 61P 35/00	EP 2313376*	SUBSTITUTED 1-BENZYL-CINNOLIN-4(1H)-ONE DERIVATIVES, PREPARATION THEREOF, AND THERAPEUTIC USE THEREOF
A 61P 35/00	EP 2313399*	THIOPHENE OR THIAZOLE DERIVATIVES AND THEIR USE AS PI3K INHIBITORS
A 61P 35/00	EP 2313407*	cMET INHIBITORS
A 61P 35/00	EP 2313414*	KINASE INHIBITORS AND METHODS OF USE
A 61P 35/00	EP 2315594*	METHODS OF TREATING A MEIOTIC KINESIN-ASSOCIATED DISEASE
A 61P 35/00	EP 2315601*	COMBINATION OF A C-MET ANTAGONIST AND AN AMINOHETEROARYL COMPOUND FOR THE TREATMENT OF CANCER
A 61P 35/00	EP 2315756*	1,2,5-OXADIAZOLES AS INHIBITORS OF INDOLEAMINE 2,3-DIOXYGENASE
A 61P 35/00	EP 2318042*	VACCINE AGAINST HPV

(51)	Број објаве европске пријаве патента	(51)
A 61P 35/00	EP 2318363*	HETEROCYCLIC DERIVATIVES AS IAP BINDING COMPOUNDS
A 61P 35/00	EP 2318382*	NOVEL IMIDAZO[1,2-A]PYRIDINE DERIVATIVES, METHOD FOR THE PREPARATION THEREOF, USE THEREOF AS MEDICAMENTS, PHARMACEUTICAL COMPOSITIONS AND NOVEL USE IN PARTICULAR AS MET INHIBITORS
A 61P 35/00	EP 2318389*	PYRIDAZINE DERIVATIVES AS SMO INHIBITORS
A 61P 35/00	EP 2318395*	INHIBITORS OF IAP
A 61P 35/00	EP 2318401*	AZAINDOLE INHIBITORS OF IAP
A 61P 35/00	EP 2318415*	OXAZOLOPYRIMIDINES AS EDG-1 RECEPTOR AGONISTS
A 61P 35/00	EP 2318419*	BORONATE ESTER COMPOUNDS AND PHARMACEUTICAL COMPOSITIONS THEREOF
A 61P 35/00	EP 2320895*	CDK MODULATORS
A 61P 35/00	EP 2321295*	4-(PYRIDIN-4-YL)-1H-[1,3,5]TRIAZIN-2-ONE DERIVATIVES AS GSK3-BETA INHIBITORS FOR THE TREATMENT OF NEURODEGENERATIVE DISEASES
A 61P 35/00	EP 2321298*	AURORA KINASE MODULATORS AND METHODS OF USE
A 61P 35/00	EP 2321325*	ANTITUMORAL MACROLIDES
A 61P 35/02	EP 2079486*	EFFICIENT SYNTHESIS OF CHELATORS FOR NUCLEAR IMAGING AND RADIOTHERAPY: COMPOSITIONS AND APPLICATIONS
A 61P 35/04	EP 2061772*	MULTI-FUNCTIONAL SMALL MOLECULES AS ANTI-PROLIFERATIVE AGENTS
A 61P 37/00	EP 2300469*	FUSED NITROGEN CONTAINING HETEROCYCLES AND COMPOSITIONS THEREOF AS KINASE INHIBITORS
A 61P 37/00	EP 2301576	Therapeutic use of Anti-CS1 Antibodies
A 61P 37/00	EP 2303251*	NEW COMBINATION FOR USE IN THE TREATMENT OF INFLAMMATORY DISORDERS
A 61P 37/00	EP 2303845*	BI-AND POLYCYCLIC SUBSTITUTED ISOQUINOLINE AND ISOQUINOLINE DERIVATIVES AS RHO KINASE INHIBITORS
A 61P 37/00	EP 2303846*	SUBSTITUTED ISOQUINOLINES AND ISOQUINOLINONES AS RHO KINASE INHIBITORS
A 61P 37/00	EP 2303850*	NOVEL POTASSIUM CHANNEL BLOCKERS AND USES THEREOF
A 61P 37/00	EP 2311807	Compounds and composition as protein kinase inhibitors
A 61P 37/00	EP 2315756*	1,2,5-OXADIAZOLES AS INHIBITORS OF INDOLEAMINE 2,3-DIOXYGENASE
A 61P 37/00	EP 2318437*	METHOD FOR TREATING MULTIPLE SCLEROSIS PATIENTS WITH ANTI-IL2R ANTIBODIES
A 61P 37/06	EP 2063908*	USE OF MODIFIED INTERLEUKIN-8 PROTEINS FOR TREATING REPERFUSION INJURY OR TRANSPLANT REJECTION
A 61P 37/06	EP 2132230*	APOPTOTIC ANTI-IGE ANTIBODIES BINDING THE MEMBRANE-BOUND IGE
A 61P 37/06	EP 2297204*	ANTI-CD8 ANTIBODIES BLOCK PRIMING OF CYTOTOXIC EFFECTORS AND LEAD TO GENERATION OF REGULATORY CD8+T CELLS
A 61P 37/06	EP 2303850*	NOVEL POTASSIUM CHANNEL BLOCKERS AND USES THEREOF
A 61P 37/08	EP 2303287*	ANTIALLERGIC MARINE BIOPOLYMERS
A 61P 37/08	EP 2307362*	ANTAGONISTS OF PROSTAGLANDIN D2 RECEPTORS
A 61P 37/08	EP 2310366*	NOVEL TRIAZOLO(4,3-A)PYRIDINE DERIVATIVES, PROCESS FOR THE PREPARATION THEREOF, USE THEREOF AS MEDICAMENTS, PHARMACEUTICAL COMPOSITIONS AND NOVEL USE, IN PARTICULAR AS MET INHIBITORS
A 61P 37/08	EP 2319840	AMINOPROPYLIDENE DERIVATIVE

(51)	Број објаве европске пријаве патента	(51)
A 61P 39/02	EP 2320890*	INDICATION OF USE OF ERDOSTEINE AS ANTIDOTE IN A LARGE NUMBER OF INTOXICATIONS, ESPECIALLY IN HEAVY METALS LIKE LEAD OR MERCURY, AND PARACETAMOL
A 61P 43/00	EP 2298747	TRIAZOLE DERIVATIVE OR SALT THEREOF
A 61P 43/00	EP 2293795*	PHARMACEUTICAL COMBINATION
A 61P 43/00	EP 2298755	METHOD OF PRODUCING BICYCLO[3.1.0]HEXANE DERIVATIVE USING ENZYME
A 61P 43/00	EP 2305641	SULFONAMIDE COMPOUND OR SALT THEREOF
A 61P 43/00	EP 2305672	SULFUR-CONTAINING HETEROCYCLIC DERIVATIVE HAVING ß-SECRETASE-INHIBITING ACTIVITY
A 61P 43/00	EP 2308509	INHIBITOR OF ANALGESIC TOLERANCE
A 61P 43/00	EP 2308869	AZOLE COMPOUND
A 61P 43/00	EP 2313374*	6-SUBSTITUTED ISOQUINOLINES AND ISOQUINOLINONES
A 61P 43/00	EP 2315586*	1-AMINO-ALKYLCYCLOHEXANE DERIVATIVES FOR THE TREATMENT OF SLEEP DISORDERS
A 61P 43/00	EP 2315756*	1,2,5-OXADIAZOLES AS INHIBITORS OF INDOLEAMINE 2,3-DIOXYGENASE
A 61P 43/00	EP 2319840	AMINOPROPYLIDENE DERIVATIVE
A 61Q 1/00	EP 2313159*	COMPOSITION FOR PROVIDING A BENEFIT TO A KERATIN-CONTAINING SUBSTRATE
A 61Q 1/14	EP 2218439	Cleansing gel comprising jojoba oil
A 61Q 5/12	EP 2307403*	COSMETIC COMPOSITION, COSMETIC TREATMENT METHOD AND 4-OXO-1,4-DIHYDROPYRIMIDIN-2-YL COMPOUNDS
A 61Q 5/12	EP 2313158*	METHODS AND KITS IMPARTING BENEFITS TO KERATIN-CONTAINING SUBSTRATES
A 61Q 5/12	EP 2313159*	COMPOSITION FOR PROVIDING A BENEFIT TO A KERATIN-CONTAINING SUBSTRATE
A 61Q 11/00	EP 2296612*	THERAPEUTIC AND PROPHYLACTIC FORMULATION FOR ORAL CARE
A 61Q 17/00	EP 2313159*	COMPOSITION FOR PROVIDING A BENEFIT TO A KERATIN-CONTAINING SUBSTRATE
A 61Q 19/00	EP 2218440	Composition including a sucrose ester and a polyglycerol ester
A 61Q 19/00	EP 2313054*	FOAMING SKINCARE CREAM
A 61Q 19/00	EP 2317984*	ARTICLES OF MANUFACTURE RELEASING AN ACTIVE INGREDIENT
A 61Q 19/00	EP 2318034*	WOUND HEALING
A 61Q 19/10	EP 2010022873	LIPOSOMAL STRUCTURES FORMING ISOMETRIC AGGLOMERATES, ESPECIALLY BATH BEADS, THE PRODUCTION AND USE THEREOF
A 61Q 19/10	EP 2317968*	LIPOSOMAL STRUCTURES FORMING ISOMETRIC AGGLOMERATES, ESPECIALLY BATH BEADS, THE PRODUCTION AND USE THEREOF
A 62C 35/68	EP 2048418	Safety electrovalve
A 63B 21/068	EP 2101883*	VIBRATION APPARATUS FOR USE ON THERAPY AND EXERCISE EQUIPMENT, AND A METHOD FOR PROVIDING CONTROLLABLE VIBRATION TO SUCH EQUIPMENT
A 63B 22/08	EP 2300106*	TRAINING SYSTEM COMPRISING A CYCLING DEVICE
A 63B 59/14	EP 2310098*	HOCKEY STICK
B 01D 1/00	EP 2111931	METHOD FOR DISPOSAL OF ORGANIC WASTE MATERIAL AND APPARATUS FOR THE METHOD
B 01D 1/18	EP 2321022*	PROCESS FOR IMPROVING CRYSTALLINITY
B 01D 1/18	EP 2321023*	PROCESS FOR IMPROVING CRYSTALLINITY OF FLUTICASONE PARTICLES
B 01D 5/00	EP 2111931	METHOD FOR DISPOSAL OF ORGANIC WASTE MATERIAL AND APPARATUS FOR THE METHOD
B 01D 9/00	EP 2321022*	PROCESS FOR IMPROVING CRYSTALLINITY
B 01D 9/00	EP 2321023*	PROCESS FOR IMPROVING CRYSTALLINITY OF FLUTICASONE PARTICLES

(51)	Број објаве европске пријаве патента	(51)
B 01D 29/11	EP 2111931	METHOD FOR DISPOSAL OF ORGANIC WASTE MATERIAL AND APPARATUS FOR THE METHOD
B 01D 35/02	EP 2133413	DEVICE FOR TREATING AND PURIFYING A LIQUID PRODUCT
B 01D 35/04	EP 2133413	DEVICE FOR TREATING AND PURIFYING A LIQUID PRODUCT
B 01D 35/16	EP 2133413	DEVICE FOR TREATING AND PURIFYING A LIQUID PRODUCT
B 01D 35/18	EP 2236185	Filter Assembly
B 01D 46/52	EP 2304326*	CROSS-PLEATED MEMBRANE CARTRIDGES, AND METHOD AND APPARATUS FOR MAKING CROSS-PLEATED MEMBRANE CARTRIDGES
B 01D 47/06	EP 2010025739	METHOD AND SYSTEM FOR COOLING HOT GASES BY WATER INJECTION
B 01D 53/40	EP 2111931	METHOD FOR DISPOSAL OF ORGANIC WASTE MATERIAL AND APPARATUS FOR THE METHOD
B 01D 53/48	EP 2303773*	COMPACT, TIERED SULFUR RECOVERY UNIT
B 01D 53/50	EP 2295130	A METHOD AND DEVICE FOR DESULFURIZATION OF THE SMOKE DISCHARGED FROM SHIP
B 01D 53/77	EP 2111931	METHOD FOR DISPOSAL OF ORGANIC WASTE MATERIAL AND APPARATUS FOR THE METHOD
B 01D 53/78	EP 2010025739	METHOD AND SYSTEM FOR COOLING HOT GASES BY WATER INJECTION
B 01D 53/78	EP 2295130	A METHOD AND DEVICE FOR DESULFURIZATION OF THE SMOKE DISCHARGED FROM SHIP
B 01D 53/86	EP 2111931	METHOD FOR DISPOSAL OF ORGANIC WASTE MATERIAL AND APPARATUS FOR THE METHOD
B 01D 57/02	EP 2313182*	AMPLIFIED ELECTROKINETIC FLUID PUMPING SWITCHING AND DESALTING
B 01F 5/04	EP 2298080	Method and apparatus for making aerated food product and product obtainable thereby
B 01F 17/52	EP 2310342*	PROCESS FOR THE PREPARATION OF FERTILIZER AND SURFACTANT NATURAL COMPOSITIONS FOR WASHING, RECLAMATION AND CULTIVATION OF CONTAMINATED SOILS AND RELATED COMPOSITIONS
B 01F 17/56	EP 2310342*	PROCESS FOR THE PREPARATION OF FERTILIZER AND SURFACTANT NATURAL COMPOSITIONS FOR WASHING, RECLAMATION AND CULTIVATION OF CONTAMINATED SOILS AND RELATED COMPOSITIONS
B 01J 2/20	EP 2218497	Apparatus for the production of pellets for a continuous screw press triturating oleous seeds
B 01J 8/18	EP 2318313*	FLUIDIZED BED REACTOR FOR PRODUCTION OF HIGH PURITY SILICON
B 01J 13/14	EP 2307129*	MICROCAPSULES COMPRISING ACTIVE INGREDIENTS AND A METAL OXIDE SHELL, A METHOD FOR THEIR PREPARATION AND USES THEREOF
B 01J 19/00	EP 2310418*	METHOD OF EXTRACTION OF FURFURAL AND GLUCOSE FROM BIOMASS USING ONE OR MORE SUPERCRITICAL FLUIDS
B 01J 19/18	EP 2300419*	METHOD AND APPARATUS FOR PREPARING A SOLUTION OF A SHEAR SENSITIVE MATERIAL
B 01J 19/18	EP 2321042*	AUTOMATED OLIGOSACCHARIDE SYNTHESIZER
B 01J 20/04	EP 1974806	Process for the purification of water
B 01J 20/04	EP 1982759	Surface treated calcium carbonate and its use in waste water treatment
B 01J 21/06	EP 2318130*	PROCESS FOR PRODUCING CARBON SUBSTRATES LOADED WITH METAL OXIDES AND CARBON SUBSTRATES PRODUCED IN THIS WAY
B 01J 21/12	EP 2321257*	PRODUCTION OF MIXTURES OF METHYLENEDIANILINE AND ITS HIGHER HOMOLOGUES USING CALCINED METAL OXIDE-SILICA CATALYSTS

(51)	Број објаве европске пријаве патента	(51)
B 01J 21/18	EP 2224045	Process for producing carbon nanofibres and/or carbon nanotubes
B 01J 21/18	EP 2233207	Process for the preparation of metal-carbon containing bodies
B 01J 21/18	EP 2318130*	PROCESS FOR PRODUCING CARBON SUBSTRATES LOADED WITH METAL OXIDES AND CARBON SUBSTRATES PRODUCED IN THIS WAY
B 01J 23/755	EP 2233207	Process for the preparation of metal-carbon containing bodies
B 01J 23/881	EP 2233207	Process for the preparation of metal-carbon containing bodies
B 01J 27/18	EP 2163304	Coating composition comprising photocatalyst coated with apatite and radiant heating system having the same
B 01J 35/00	EP 2163304	Coating composition comprising photocatalyst coated with apatite and radiant heating system having the same
B 01J 37/00	EP 2321257*	PRODUCTION OF MIXTURES OF METHYLENEDIANILINE AND ITS HIGHER HOMOLOGUES USING CALCINED METAL OXIDE-SILICA CATALYSTS
B 01J 37/02	EP 2233207	Process for the preparation of metal-carbon containing bodies
B 01J 37/08	EP 2224045	Process for producing carbon nanofibres and/or carbon nanotubes
B 01J 37/08	EP 2233207	Process for the preparation of metal-carbon containing bodies
B 01J 37/08	EP 2318130*	PROCESS FOR PRODUCING CARBON SUBSTRATES LOADED WITH METAL OXIDES AND CARBON SUBSTRATES PRODUCED IN THIS WAY
B 01J 47/04	EP 2297050*	APPARATUS FOR TREATING WASTEWATER, PARTICULARLY WASTEWATER ORIGINATING FROM A PROCESS FOR THE PRODUCTION OF PHOTOVOLTAIC CELLS
B 05B 7/24	EP 2303466*	A CONNECTOR FOR A GRAVITY FEED SPRAY GUN, A GRAVITY FEED SPRAY GUN AND A METHOD OF PREPARING A SPRAY PAINT
B 05D 7/14	EP 2224037	Method for passivating metal substrate belts
B 06B 1/08	EP 2315634*	A MAGNETOSTRICTIVE ACTUATOR OF A MEDICAL ULTRASOUND TRANSDUCER ASSEMBLY, AND A MEDICAL ULTRASOUND HANDPIECE AND A MEDICAL ULTRASOUND SYSTEM HAVING SUCH ACTUATOR
B 08B 9/055	EP 2310149*	SPEED REGULATED PIPELINE PIG
B 09B 3/00	EP 2111931	METHOD FOR DISPOSAL OF ORGANIC WASTE MATERIAL AND APPARATUS FOR THE METHOD
B 09C 1/08	EP 2310342*	PROCESS FOR THE PREPARATION OF FERTILIZER AND SURFACTANT NATURAL COMPOSITIONS FOR WASHING, RECLAMATION AND CULTIVATION OF CONTAMINATED SOILS AND RELATED COMPOSITIONS
B 21B 1/46	EP 1963034*	PROCESS AND RELATED PLANT FOR PRODUCING STEEL STRIPS WITH SOLUTION OF CONTINUITY
B 22D 7/02	EP 2303490*	SEQUENTIAL CASTING OF METALS HAVING SIMILAR FREEZING RANGES
B 22D 7/12	EP 2293892*	METHOD AND APPARATUS FOR REMOVAL OF COOLING WATER FROM INGOTS BY MEANS OF WATER JETS
B 22D 9/00	EP 2293892*	METHOD AND APPARATUS FOR REMOVAL OF COOLING WATER FROM INGOTS BY MEANS OF WATER JETS
B 22D 30/00	EP 2293892*	METHOD AND APPARATUS FOR REMOVAL OF COOLING WATER FROM INGOTS BY MEANS OF WATER JETS
B 22F 1/00	EP 2315639*	GREEN SYNTHESIS OF NANOMETALS USING PLANT EXTRACTS AND USE THEREOF
B 22F 9/24	EP 2315639*	GREEN SYNTHESIS OF NANOMETALS USING PLANT EXTRACTS AND USE THEREOF
B 23D 31/00	EP 2310165*	METHOD FOR PRODUCING STEEL FIBERS
B 23D 59/00	EP 2218533	Component for reversible attachment to a handheld cutting device
B 23K 26/38	EP 2300194*	POST LASER DRILLING STRESS RELIEF OF SURGICAL NEEDLES MADE OF REFRACTORY ALLOYS
B 23P 17/06	EP 2310165*	METHOD FOR PRODUCING STEEL FIBERS
B 24B 9/20	EP 2293912*	SURFACE TREATED IMPLANTABLE ARTICLES AND RELATED METHODS

(51)	Број објаве европске пријаве патента	(51)
B 24B 31/00	EP 2293912*	SURFACE TREATED IMPLANTABLE ARTICLES AND RELATED METHODS
B 24D 3/28	EP 2291453*	FORMALDEHYDE-FREE ABRASIVE ARTICLE
B 25B 27/10	EP 2014419	Hydraulic pressing device, in particular for binding workpieces
B 27B 17/00	EP 2218533	Component for reversible attachment to a handheld cutting device
B 29B 17/02	EP 2296858*	METHOD FOR RECYCLING COMPOSITE MATERIAL
B 29C 37/02	EP 2293912*	SURFACE TREATED IMPLANTABLE ARTICLES AND RELATED METHODS
B 29C 39/10	EP 2310175*	A METHOD FOR MANUFACTURING A LENS TO BE ADDED TO A LED, AND A LENS OBTAINED WITH THAT METHOD
B 29C 43/18	EP 2278198	Seal and corresponding manufacturing method
B 29C 45/00	EP 2293914*	METHOD FOR MOULDING POLY(1,4-DIOXANONE)
B 29C 45/16	EP 2318194*	PLASTIC PREFORM AND PROCESS FOR THE MANUFACTURING THEREOF TO A CONTAINER AND THE CONTAINER AND THE USE THEREOF
B 29C 49/00	EP 2318194*	PLASTIC PREFORM AND PROCESS FOR THE MANUFACTURING THEREOF TO A CONTAINER AND THE CONTAINER AND THE USE THEREOF
B 29C 49/22	EP 2318194*	PLASTIC PREFORM AND PROCESS FOR THE MANUFACTURING THEREOF TO A CONTAINER AND THE CONTAINER AND THE USE THEREOF
B 29C 51/10	EP 2300213*	A METHOD FOR PRODUCING FOOD PACKAGING AND SUCH A FOOD PACKAGING
B 29C 51/16	EP 2300213*	A METHOD FOR PRODUCING FOOD PACKAGING AND SUCH A FOOD PACKAGING
B 29C 51/42	EP 2300213*	A METHOD FOR PRODUCING FOOD PACKAGING AND SUCH A FOOD PACKAGING
B 29C 63/00	EP 2313252*	METHOD FOR APPLYING EDGE STRIPS ONTO NARROW SURFACES OF IN PARTICULAR PLATE-SHAPED WORK PIECES AND WORK PIECES OBTAINED IN SAID MANNER
B 29C 65/00	EP 2221164	Ridge and arris role with welded seam
B 29C 65/02	EP 2221164	Ridge and arris role with welded seam
B 29C 65/10	EP 2221164	Ridge and arris role with welded seam
B 29C 65/74	EP 2221164	Ridge and arris role with welded seam
B 29C 70/44	EP 2221167	Apparatus And Method Of Making Composite Material Articles
B 29C 71/00	EP 2293912*	SURFACE TREATED IMPLANTABLE ARTICLES AND RELATED METHODS
B 29D 30/06	EP 2315657*	MACHINE AND METHOD FOR COMPACTING AN ANNULAR PART MADE OF A FLEXIBLE MATERIAL
B 30B 9/30	EP 2315657*	MACHINE AND METHOD FOR COMPACTING AN ANNULAR PART MADE OF A FLEXIBLE MATERIAL
B 30B 11/20	EP 2218497	Apparatus for the production of pellets for a continuous screw press triturating oleous seeds
B 30B 11/34	EP 2121297*	METHOD AND APPARATUS FOR PRODUCING A CENTRED COMPRESSION COATED TABLET
B 30B 13/00	EP 2315657*	MACHINE AND METHOD FOR COMPACTING AN ANNULAR PART MADE OF A FLEXIBLE MATERIAL
B 31D 5/04	EP 2304326*	CROSS-PLEATED MEMBRANE CARTRIDGES, AND METHOD AND APPARATUS FOR MAKING CROSS-PLEATED MEMBRANE CARTRIDGES
B 31F 1/28	EP 2313264*	METHOD OF FORMING SINGLE FACE CORRUGATED BOARD
B 31F 5/04	EP 2313264*	METHOD OF FORMING SINGLE FACE CORRUGATED BOARD
B 32B 5/22	EP 1990478	A building roof structure
B 32B 5/30	EP 1990478	A building roof structure
B 32B 7/04	EP 1990478	A building roof structure
B 32B 7/12	EP 1990478	A building roof structure
B 32B 7/14	EP 2313264*	METHOD OF FORMING SINGLE FACE CORRUGATED BOARD

(51)	Број објаве европске пријаве патента	(51)
B 32B 11/00	EP 2315664*	MATTE SUBSTRATE
B 32B 11/04	EP 1990478	A building roof structure
B 32B 11/12	EP 1990478	A building roof structure
B 32B 27/08	EP 2078047*	POLYURETHANE ADHESIVE
B 32B 27/30	EP 2078047*	POLYURETHANE ADHESIVE
B 32B 27/40	EP 2078047*	POLYURETHANE ADHESIVE
B 32B 29/08	EP 2313264*	METHOD OF FORMING SINGLE FACE CORRUGATED BOARD
B 41C 1/045	EP 2305464	Method for engraving a surface, a surface of a printing plate for gravure printing and a surface produced according to the method
B 41M 5/025	EP 2236307	Production of transfer paper for inkjet printing
B 41M 5/035	EP 2236307	Production of transfer paper for inkjet printing
B 41M 5/52	EP 2236307	Production of transfer paper for inkjet printing
B 60D 1/60	EP 2253857	Catch element
B 60J 1/18	EP 2301782	Vehicle window assembly with horizontal slider
B 60S 3/06	EP 2181902	Double-gantry car wash installation, and corresponding method
B 60W 10/10	EP 2213910	Method and device for changing the gears of a hydrostatically driven multiple gear gearbox
B 61C 5/00	EP 2003037	Device for attaching a drive system to the chassis of a self-propelled vehicle and self-propelled vehicle comprising such a device
B 61C 17/04	EP 2003037	Device for attaching a drive system to the chassis of a self-propelled vehicle and self-propelled vehicle comprising such a device
B 61D 3/10	EP 2301821	DEVICES FOR MOVING THE BUFFERS OF ARTICULATED CARS OF RAILWAY VEHICLES TRAVELLING ON A CURVE
B 61F 5/22	EP 2301821	DEVICES FOR MOVING THE BUFFERS OF ARTICULATED CARS OF RAILWAY VEHICLES TRAVELLING ON A CURVE
B 63C 5/02	EP 2300311*	SUPPORT PLATFORM FOR WORKERS DEALING WITH MAINTENANCE AND CONSTRUCTION OF MEANS OF TRANSPORT
B 64C 27/00	EP 2310263*	METHOD, APPARATUS AND SYSTEM FOR REDUCING VIBRATION IN A ROTARY SYSTEM OF AN AIRCRAFT, SUCH AS A ROTOR OF A HELICOPTER
B 65B 5/04	EP 2321183*	PADDING MACHINE FOR PACKAGING SUBSTANTIAL PRODUCTS, PARTICULARLY CUCUMBERS AND THE LIKE
B 65B 19/34	EP 2321183*	PADDING MACHINE FOR PACKAGING SUBSTANTIAL PRODUCTS, PARTICULARLY CUCUMBERS AND THE LIKE
B 65B 25/04	EP 2321183*	PADDING MACHINE FOR PACKAGING SUBSTANTIAL PRODUCTS, PARTICULARLY CUCUMBERS AND THE LIKE
B 65B 27/06	EP 2315657*	MACHINE AND METHOD FOR COMPACTING AN ANNULAR PART MADE OF A FLEXIBLE MATERIAL
B 65B 35/50	EP 2230181	Machine and method for grouping containers
B 65B 43/14	EP 2223857	Automatic machine for packaging products in fabric bags
B 65B 43/46	EP 2223857	Automatic machine for packaging products in fabric bags
B 65B 61/24	EP 2230181	Machine and method for grouping containers
B 65D 1/02	EP 2318194*	PLASTIC PREFORM AND PROCESS FOR THE MANUFACTURING THEREOF TO A CONTAINER AND THE CONTAINER AND THE USE THEREOF
B 65D 5/56	EP 2300213*	A METHOD FOR PRODUCING FOOD PACKAGING AND SUCH A FOOD PACKAGING
B 65D 5/60	EP 2230194	Packaging for a plurality of coils of feedwire
B 65D 43/02	EP 2293990*	CLOSURE DEVICE FOR A CONTAINER
B 65D 83/08	EP 2305086	STACKED SHEET BODY AND SHEET STORING DEVICE
B 65D 83/08	EP 2308773	CONTAINING DEVICE
B 65D 83/08	EP 2308774	PACKAGE BODY
B 65D 85/04	EP 2230194	Packaging for a plurality of coils of feedwire
B 65D 85/58	EP 2272399	DEVICE FOR STORING COMPACT DISCS

(51)	Број објаве европске пријаве патента	(51)
B 65D 85/804	EP 2306871*	SYSTEM, CAPSULE AND METHOD FOR PREPARING A BEVERAGE
B 65D 85/804	EP 2307288*	SYSTEM, METHOD AND CAPSULE FOR PREPARING A BEVERAGE
B 65D 85/804	EP 2310301*	SYSTEM, METHOD AND CAPSULE FOR PREPARING A BEVERAGE
B 65D 88/00	EP 2313330*	TRANSPORTABLE, MODULAR, SELF CONTAINED SHIPPING CONTAINER BUILDING
B 65G 1/16	EP 2315657*	MACHINE AND METHOD FOR COMPACTING AN ANNULAR PART MADE OF A FLEXIBLE MATERIAL
B 65G 53/50	EP 2297011*	METHOD AND DEVICE FOR OUTPUT OF GRANULATE FROM THE BOTTOM OF A TANK THAT IN ADDITION TO GRANULATE HOLDS LIQUID
B 65G 57/03	EP 2230181	Machine and method for grouping containers
B 65G 69/00	EP 2315657*	MACHINE AND METHOD FOR COMPACTING AN ANNULAR PART MADE OF A FLEXIBLE MATERIAL
B 65H 37/00	EP 2199355	Adhesive dispensing tape including a transparent carrier material
B 66F 7/28	EP 2223883	Assembly and repair device
B 67D 1/08	EP 2135022*	A MOTOR PROTECTION DEVICE
B 81B 7/02	EP 2321216*	METHOD AND DEVICE FOR ENCAPSULATING MICROSTRUCTURES
B 81C 1/00	EP 2321216*	METHOD AND DEVICE FOR ENCAPSULATING MICROSTRUCTURES
B 82B 1/00	EP 2315639*	GREEN SYNTHESIS OF NANOMETALS USING PLANT EXTRACTS AND USE THEREOF
C 01B 17/04	EP 2303773*	COMPACT, TIERED SULFUR RECOVERY UNIT
C 01B 31/00	EP 2233207	Process for the preparation of metal-carbon containing bodies
C 01B 31/00	EP 2303774*	INTERCALATION OF SILICON AND/OR TIN INTO POROUS CARBON SUBSTRATES
C 01B 31/02	EP 2224045	Process for producing carbon nanofibres and/or carbon nanotubes
C 01B 33/025	EP 2297034*	METHOD FOR PREPARING HIGH-PURITY METALLURGICAL-GRADE SILICON
C 01B 33/025	EP 2297035*	METHOD AND APPARATUS FOR PURIFYING METALLURGICAL GRADE SILICON BY DIRECTIONAL SOLIDIFICATION AND FOR OBTAINING SILICON INGOTS FOR PHOTOVOLTAIC USE
C 01B 33/037	EP 2297034*	METHOD FOR PREPARING HIGH-PURITY METALLURGICAL-GRADE SILICON
C 01B 33/037	EP 2297035*	METHOD AND APPARATUS FOR PURIFYING METALLURGICAL GRADE SILICON BY DIRECTIONAL SOLIDIFICATION AND FOR OBTAINING SILICON INGOTS FOR PHOTOVOLTAIC USE
C 01B 33/037	EP 2318313*	FLUIDIZED BED REACTOR FOR PRODUCTION OF HIGH PURITY SILICON
C 01F 5/24	EP 2322581	Precipitated magnesium carbonate
C 01G 3/00	EP 2294012*	METHODS OF TREATING BOWEL DISEASE BY ADMINISTERING A BOWEL CLEANSER AND AN ANTIBIOTIC
C 02F 1/04	EP 2111931	METHOD FOR DISPOSAL OF ORGANIC WASTE MATERIAL AND APPARATUS FOR THE METHOD
C 02F 1/04	EP 2297050*	APPARATUS FOR TREATING WASTEWATER, PARTICULARLY WASTEWATER ORIGINATING FROM A PROCESS FOR THE PRODUCTION OF PHOTOVOLTAIC CELLS
C 02F 1/28	EP 1974806	Process for the purification of water
C 02F 1/28	EP 1982759	Surface treated calcium carbonate and its use in waste water treatment
C 02F 1/28	EP 2297050*	APPARATUS FOR TREATING WASTEWATER, PARTICULARLY WASTEWATER ORIGINATING FROM A PROCESS FOR THE PRODUCTION OF PHOTOVOLTAIC CELLS

(51)	Број објаве европске пријаве патента	(51)
C 02F 1/42	EP 2297050*	APPARATUS FOR TREATING WASTEWATER, PARTICULARLY WASTEWATER ORIGINATING FROM A PROCESS FOR THE PRODUCTION OF PHOTOVOLTAIC CELLS
C 02F 1/52	EP 2297050*	APPARATUS FOR TREATING WASTEWATER, PARTICULARLY WASTEWATER ORIGINATING FROM A PROCESS FOR THE PRODUCTION OF PHOTOVOLTAIC CELLS
C 02F 1/56	EP 1974806	Process for the purification of water
C 02F 1/56	EP 1982759	Surface treated calcium carbonate and its use in waste water treatment
C 02F 3/02	EP 2111931	METHOD FOR DISPOSAL OF ORGANIC WASTE MATERIAL AND APPARATUS FOR THE METHOD
C 02F 9/00	EP 2297050*	APPARATUS FOR TREATING WASTEWATER, PARTICULARLY WASTEWATER ORIGINATING FROM A PROCESS FOR THE PRODUCTION OF PHOTOVOLTAIC CELLS
C 02F 9/04	EP 2297050*	APPARATUS FOR TREATING WASTEWATER, PARTICULARLY WASTEWATER ORIGINATING FROM A PROCESS FOR THE PRODUCTION OF PHOTOVOLTAIC CELLS
C 02F 9/08	EP 2297050*	APPARATUS FOR TREATING WASTEWATER, PARTICULARLY WASTEWATER ORIGINATING FROM A PROCESS FOR THE PRODUCTION OF PHOTOVOLTAIC CELLS
C 02F 103/04	EP 2297050*	APPARATUS FOR TREATING WASTEWATER, PARTICULARLY WASTEWATER ORIGINATING FROM A PROCESS FOR THE PRODUCTION OF PHOTOVOLTAIC CELLS
C 02F 103/12	EP 2297050*	APPARATUS FOR TREATING WASTEWATER, PARTICULARLY WASTEWATER ORIGINATING FROM A PROCESS FOR THE PRODUCTION OF PHOTOVOLTAIC CELLS
C 02F 103/28	EP 1974806	Process for the purification of water
C 02F 103/28	EP 1982759	Surface treated calcium carbonate and its use in waste water treatment
C 02F 103/32	EP 1974806	Process for the purification of water
C 02F 103/32	EP 1982759	Surface treated calcium carbonate and its use in waste water treatment
C 02F 103/34	EP 2297050*	APPARATUS FOR TREATING WASTEWATER, PARTICULARLY WASTEWATER ORIGINATING FROM A PROCESS FOR THE PRODUCTION OF PHOTOVOLTAIC CELLS
C 03B 7/06	EP 2310331*	FOREHEARTH OR WORKING-END FOR GLASS FURNACE AND PROCEDURE FOR THE EXTRACTION OF FUMES FROM THE FOREHEARTH
C 03B 19/08	EP 2297054*	CELLULAR CERAMIC PLATES WITH ASYMMETRICAL CELL STRUCTURE AND MANUFACTURING METHOD THEREOF
C 04B 2/10	EP 2230223	Method and device for producing calcium
C 04B 14/00	EP 2210866	Thin-layer heat screed construction on partition and insulating layer
C 04B 28/02	EP 2294029*	A PAVING WITH A POLLUTION-ABATING ACTIVITY AND A PHOTOCATALYTIC MIXTURE FOR ITS PREPARATION
C 04B 28/14	EP 2210866	Thin-layer heat screed construction on partition and insulating layer
C 05F 11/02	EP 2310342*	PROCESS FOR THE PREPARATION OF FERTILIZER AND SURFACTANT NATURAL COMPOSITIONS FOR WASHING, RECLAMATION AND CULTIVATION OF CONTAMINATED SOILS AND RELATED COMPOSITIONS

(51)	Број објаве европске пријаве патента	(51)
C 07C 2/02	EP 2300398*	PROCESSES FOR CONVERTING GASEOUS ALKANES TO LIQUID HYDROCARBONS
C 07C 4/04	EP 2297072*	PROCESS FOR THE MANUFACTURE OF 1,2-DICHLOROETHANE AND OF AT LEAST ONE ETHYLENE DERIVATIVE COMPOUND DIFFERENT FROM 1,2-DICHLOROETHANE
C 07C 7/04	EP 2297072*	PROCESS FOR THE MANUFACTURE OF 1,2-DICHLOROETHANE AND OF AT LEAST ONE ETHYLENE DERIVATIVE COMPOUND DIFFERENT FROM 1,2-DICHLOROETHANE
C 07C 11/04	EP 2297072*	PROCESS FOR THE MANUFACTURE OF 1,2-DICHLOROETHANE AND OF AT LEAST ONE ETHYLENE DERIVATIVE COMPOUND DIFFERENT FROM 1,2-DICHLOROETHANE
C 07C 13/19	EP 2316809	Process for the preparation of benzonorbornane derivatives
C 07C 13/19	EP 2316814	Process for preparation of halogen substituted benzonorbornenes derivatives
C 07C 13/19	EP 2316815	Process for preparation of halogen substituted arynes
C 07C 13/48	EP 2316809	Process for the preparation of benzonorbornane derivatives
C 07C 17/00	EP 2310346*	BROMINE-BASED METHOD AND SYSTEM FOR CONVERTING GASEOUS ALKANES TO LIQUID HYDROCARBONS USING ELECTROLYSIS FOR BROMINE RECOVERY
C 07C 17/02	EP 2297072*	PROCESS FOR THE MANUFACTURE OF 1,2-DICHLOROETHANE AND OF AT LEAST ONE ETHYLENE DERIVATIVE COMPOUND DIFFERENT FROM 1,2-DICHLOROETHANE
C 07C 17/02	EP 2303816*	PROCESS FOR THE MANUFACTURE OF AT LEAST ONE ETHYLENE DERIVATIVE COMPOUND
C 07C 17/02	EP 2307339*	PROCESS FOR THE MANUFACTURE OF AT LEAST ONE ETHYLENE DERIVATIVE COMPOUND
C 07C 17/156	EP 2303816*	PROCESS FOR THE MANUFACTURE OF AT LEAST ONE ETHYLENE DERIVATIVE COMPOUND
C 07C 17/156	EP 2307339*	PROCESS FOR THE MANUFACTURE OF AT LEAST ONE ETHYLENE DERIVATIVE COMPOUND
C 07C 17/25	EP 2303816*	PROCESS FOR THE MANUFACTURE OF AT LEAST ONE ETHYLENE DERIVATIVE COMPOUND
C 07C 17/25	EP 2307339*	PROCESS FOR THE MANUFACTURE OF AT LEAST ONE ETHYLENE DERIVATIVE COMPOUND
C 07C 17/26	EP 2316809	Process for the preparation of benzonorbornane derivatives
C 07C 17/26	EP 2316814	Process for preparation of halogen substituted benzonorbornenes derivatives
C 07C 17/26	EP 2316815	Process for preparation of halogen substituted arynes
C 07C 17/30	EP 2316809	Process for the preparation of benzonorbornane derivatives
C 07C 17/30	EP 2316814	Process for preparation of halogen substituted benzonorbornenes derivatives
C 07C 17/30	EP 2316815	Process for preparation of halogen substituted arynes
C 07C 17/42	EP 2303820*	HYDROGENATION OF MULTI-BROMINATED ALKANES
C 07C 19/045	EP 2297072*	PROCESS FOR THE MANUFACTURE OF 1,2-DICHLOROETHANE AND OF AT LEAST ONE ETHYLENE DERIVATIVE COMPOUND DIFFERENT FROM 1,2-DICHLOROETHANE
C 07C 19/045	EP 2303816*	PROCESS FOR THE MANUFACTURE OF AT LEAST ONE ETHYLENE DERIVATIVE COMPOUND
C 07C 19/045	EP 2307339*	PROCESS FOR THE MANUFACTURE OF AT LEAST ONE ETHYLENE DERIVATIVE COMPOUND
C 07C 21/06	EP 2303816*	PROCESS FOR THE MANUFACTURE OF AT LEAST ONE ETHYLENE DERIVATIVE COMPOUND
C 07C 21/06	EP 2307339*	PROCESS FOR THE MANUFACTURE OF AT LEAST ONE ETHYLENE DERIVATIVE COMPOUND
C 07C 23/10	EP 2316815	Process for preparation of halogen substituted arynes

(51)	Број објаве европске пријаве патента	(51)
C 07C 25/18	EP 2316814	Process for preparation of halogen substituted benzonorbornenes derivatives
C 07C 25/18	EP 2316815	Process for preparation of halogen substituted arynes
C 07C 46/00	EP 2307343*	PROCESS FOR THE EPIMERIZATION OF ATOVAQUONE ISOMER, ATOVAQUONE INTERMEDIATES AND MIXTURE THEREOF
C 07C 46/10	EP 2307343*	PROCESS FOR THE EPIMERIZATION OF ATOVAQUONE ISOMER, ATOVAQUONE INTERMEDIATES AND MIXTURE THEREOF
C 07C 46/10	EP 2307373*	A PROCESS FOR PREPARING ATOVAQUONE AND ASSOCIATE INTERMEDIATES
C 07C 49/603	EP 2313387*	NOVEL HERBICIDES
C 07C 49/603	EP 2313388*	NOVEL HERBICIDES
C 07C 50/24	EP 2307343*	PROCESS FOR THE EPIMERIZATION OF ATOVAQUONE ISOMER, ATOVAQUONE INTERMEDIATES AND MIXTURE THEREOF
C 07C 50/32	EP 2307343*	PROCESS FOR THE EPIMERIZATION OF ATOVAQUONE ISOMER, ATOVAQUONE INTERMEDIATES AND MIXTURE THEREOF
C 07C 50/32	EP 2307373*	A PROCESS FOR PREPARING ATOVAQUONE AND ASSOCIATE INTERMEDIATES
C 07C 62/06	EP 2318355*	1,1'-DIADAMANTYL CARBOXYLIC ACIDS, MEDICAMENTS CONTAINING SUCH COMPOUNDS AND THEIR USE
C 07C 62/38	EP 2318355*	1,1'-DIADAMANTYL CARBOXYLIC ACIDS, MEDICAMENTS CONTAINING SUCH COMPOUNDS AND THEIR USE
C 07C 67/31	EP 2298755	METHOD OF PRODUCING BICYCLO[3.1.0]HEXANE DERIVATIVE USING ENZYME
C 07C 67/343	EP 2298755	METHOD OF PRODUCING BICYCLO[3.1.0]HEXANE DERIVATIVE USING ENZYME
C 07C 69/00	EP 2318355*	1,1'-DIADAMANTYL CARBOXYLIC ACIDS, MEDICAMENTS CONTAINING SUCH COMPOUNDS AND THEIR USE
C 07C 69/675	EP 2298755	METHOD OF PRODUCING BICYCLO[3.1.0]HEXANE DERIVATIVE USING ENZYME
C 07C 69/738	EP 2298755	METHOD OF PRODUCING BICYCLO[3.1.0]HEXANE DERIVATIVE USING ENZYME
C 07C 69/753	EP 2318355*	1,1'-DIADAMANTYL CARBOXYLIC ACIDS, MEDICAMENTS CONTAINING SUCH COMPOUNDS AND THEIR USE
C 07C 69/757	EP 2298755	METHOD OF PRODUCING BICYCLO[3.1.0]HEXANE DERIVATIVE USING ENZYME
C 07C 209/06	EP 2316813	Process for the preparation of amines
C 07C 209/28	EP 2316814	Process for preparation of halogen substituted benzonorbornenes derivatives
C 07C 209/28	EP 2316815	Process for preparation of halogen substituted arynes
C 07C 209/62	EP 2316809	Process for the preparation of benzonorbornane derivatives
C 07C 209/78	EP 2321257*	PRODUCTION OF MIXTURES OF METHYLENEDIANILINE AND ITS HIGHER HOMOLOGUES USING CALCINED METAL OXIDE-SILICA CATALYSTS
C 07C 211/31	EP 2316813	Process for the preparation of amines
C 07C 211/31	EP 2316814	Process for preparation of halogen substituted benzonorbornenes derivatives
C 07C 211/31	EP 2316815	Process for preparation of halogen substituted arynes
C 07C 211/60	EP 2316809	Process for the preparation of benzonorbornane derivatives
C 07C 213/02	EP 2297089*	BENZOCYCLOHEPTANE AND BENZOXEPINE DERIVATIVES
C 07C 213/08	EP 2297089*	BENZOCYCLOHEPTANE AND BENZOXEPINE DERIVATIVES

(51)	Број објаве европске пријаве патента	(51)
C 07C 215/10	EP 2307351*	NOVEL SALTS OF (4-{[(5-{[(3-CHLOROPHENYL)METHYL]OXY}-2-METHYLPHENYL)CARBONYL[AMINO}-3-METHYLPHENYL)ACETIC ACID
C 07C 215/44	EP 2297089*	BENZOCYCLOHEPTANE AND BENZOXEPINE DERIVATIVES
C 07C 217/52	EP 2297089*	BENZOCYCLOHEPTANE AND BENZOXEPINE DERIVATIVES
C 07C 227/40	EP 2298730	METHOD OF PRODUCING PURIFIED OPTICALLY ACTIVE 4-AMINO-3-(SUBSTITUTED PHENYL)BUTANOIC ACID COMPOUND
C 07C 229/34	EP 2298730	METHOD OF PRODUCING PURIFIED OPTICALLY ACTIVE 4-AMINO-3-(SUBSTITUTED PHENYL)BUTANOIC ACID COMPOUND
C 07C 229/46	EP 2318355*	1,1'-DIADAMANTYL CARBOXYLIC ACIDS, MEDICAMENTS CONTAINING SUCH COMPOUNDS AND THEIR USE
C 07C 233/00	EP 2310356*	ADAMANTYL DIAMIDE DERIVATIVES AND USES OF SAME
C 07C 233/58	EP 2318355*	1,1'-DIADAMANTYL CARBOXYLIC ACIDS, MEDICAMENTS CONTAINING SUCH COMPOUNDS AND THEIR USE
C 07C 233/60	EP 2318355*	1,1'-DIADAMANTYL CARBOXYLIC ACIDS, MEDICAMENTS CONTAINING SUCH COMPOUNDS AND THEIR USE
C 07C 233/76	EP 2314567	Inhibitors of the microsomal prostaglandin E2 synthase-1
C 07C 233/79	EP 2310356*	ADAMANTYL DIAMIDE DERIVATIVES AND USES OF SAME
C 07C 233/88	EP 2064176*	PHENYLOXYANILINE DERIVATIVES
C 07C 235/54	EP 2303270*	ACYLAMINO-SUBSTITUTED FUSED CYCLOPENTANECARBOXYLIC ACID DERIVATIVES AND THEIR USE AS PHARMACEUTICALS
C 07C 235/56	EP 2303832*	NOVEL POLYMORPHIC FORMS OF (4-{[(5-{[(3-CHLOROPHENYL)METHYL]OXY}-2-METHYLPHENYL)CARBONYL]AMINO}-3-METHYLPHENYL)ACETIC ACID
C 07C 235/56	EP 2307351*	NOVEL SALTS OF (4-{[(5-{[(3-CHLOROPHENYL)METHYL]OXY}-2-METHYLPHENYL)CARBONYL]AMINO}-3-METHYLPHENYL)ACETIC ACID
C 07C 235/84	EP 2303270*	ACYLAMINO-SUBSTITUTED FUSED CYCLOPENTANECARBOXYLIC ACID DERIVATIVES AND THEIR USE AS PHARMACEUTICALS
C 07C 253/30	EP 2316821	Process for the manufacture of organic compounds
C 07C 253/34	EP 2061753*	METHOD FOR MANUFACTURE OF ESCITALOPRAM
C 07C 255/47	EP 2318355*	1,1'-DIADAMANTYL CARBOXYLIC ACIDS, MEDICAMENTS CONTAINING SUCH COMPOUNDS AND THEIR USE
C 07C 255/53	EP 2061753*	METHOD FOR MANUFACTURE OF ESCITALOPRAM
C 07C 259/08	EP 2318355*	1,1'-DIADAMANTYL CARBOXYLIC ACIDS, MEDICAMENTS CONTAINING SUCH COMPOUNDS AND THEIR USE
C 07C 261/04	EP 2318355*	1,1'-DIADAMANTYL CARBOXYLIC ACIDS, MEDICAMENTS CONTAINING SUCH COMPOUNDS AND THEIR USE
C 07C 271/24	EP 2315748*	PROCESSES FOR THE PREPARATION OF 4-OXO-OCTAHYDRO-INDOLE-1-CARBOCYLIC ACID METHYL ESTER AND DERIVATIVES THEREOF
C 07C 271/24	EP 2318355*	1,1'-DIADAMANTYL CARBOXYLIC ACIDS, MEDICAMENTS CONTAINING SUCH COMPOUNDS AND THEIR USE

(51)	Број објаве европске пријаве патента	(51)
C 07C 279/24	EP 2300419*	METHOD AND APPARATUS FOR PREPARING A SOLUTION OF A SHEAR SENSITIVE MATERIAL
C 07C 309/66	EP 2064176*	PHENYLOXYANILINE DERIVATIVES
C 07C 311/00	EP 2064177*	PROTEASE INHIBITORS
C 07C 311/14	EP 2314567	Inhibitors of the microsomal prostaglandin E2 synthase-1
C 07C 311/21	EP 2305641	SULFONAMIDE COMPOUND OR SALT THEREOF
C 07C 311/48	EP 2310359*	ORGANIC COMPOUNDS
C 07C 313/08	EP 2297089*	BENZOCYCLOHEPTANE AND BENZOXEPINE DERIVATIVES
C 07C 317/04	EP 2313090*	NOVEL SULPHUR CONTAINING LIPIDS FOR USE AS FOOD SUPPLEMENT OR AS MEDICAMENT
C 07C 317/06	EP 2313090*	NOVEL SULPHUR CONTAINING LIPIDS FOR USE AS FOOD SUPPLEMENT OR AS MEDICAMENT
C 07C 317/12	EP 2313090*	NOVEL SULPHUR CONTAINING LIPIDS FOR USE AS FOOD SUPPLEMENT OR AS MEDICAMENT
C 07C 321/14	EP 2313090*	NOVEL SULPHUR CONTAINING LIPIDS FOR USE AS FOOD SUPPLEMENT OR AS MEDICAMENT
C 07C 321/18	EP 2313090*	NOVEL SULPHUR CONTAINING LIPIDS FOR USE AS FOOD SUPPLEMENT OR AS MEDICAMENT
C 07C 321/20	EP 2307362*	ANTAGONISTS OF PROSTAGLANDIN D2 RECEPTORS
C 07C 321/22	EP 2313090*	NOVEL SULPHUR CONTAINING LIPIDS FOR USE AS FOOD SUPPLEMENT OR AS MEDICAMENT
C 07C 323/19	EP 2303270*	ACYLAMINO-SUBSTITUTED FUSED CYCLOPENTANECARBOXYLIC ACID DERIVATIVES AND THEIR USE AS PHARMACEUTICALS
C 07C 323/52	EP 2321272*	ORGANIC COMPOUNDS
C 07C 323/57	EP 2307362*	ANTAGONISTS OF PROSTAGLANDIN D2 RECEPTORS
C 07C 323/60	EP 2297095*	NOVEL AMINO ACID DERIVATIVES, METHOD FOR PREPARING SAME, AND THERAPEUTIC USE THEREOF
C 07C 323/62	EP 2303270*	ACYLAMINO-SUBSTITUTED FUSED CYCLOPENTANECARBOXYLIC ACID DERIVATIVES AND THEIR USE AS PHARMACEUTICALS
C 07C 323/65	EP 2297095*	NOVEL AMINO ACID DERIVATIVES, METHOD FOR PREPARING SAME, AND THERAPEUTIC USE THEREOF
C 07C 327/20	EP 2315747*	METHODS AND COMPOSITIONS RELATING TO SYNTHETIC BETA-1,6 GLUCOSAMINE OLIGOSACCHARIDES
C 07C 327/32	EP 2315747*	METHODS AND COMPOSITIONS RELATING TO SYNTHETIC BETA-1,6 GLUCOSAMINE OLIGOSACCHARIDES
C 07C 327/56	EP 2305642	Bis(thio-hydrazide amide) salts for treatment of cancers
C 07D 203/14	EP 2315748*	PROCESSES FOR THE PREPARATION OF 4-OXO-OCTAHYDRO-INDOLE-1-CARBOCYLIC ACID METHYL ESTER AND DERIVATIVES THEREOF
C 07D 205/04	EP 2300422*	AZETIDINES AND CYCLOBUTANES AS HISTAMINE H3 RECEPTOR ANTAGONISTS
C 07D 205/08	EP 2125715*	PROCESS FOR THE PREPARATION OF EZETIMIBE AND DERIVATIVES THEREOF
C 07D 207/08	EP 2313370*	5-HETEROCYCLYLALKYL-3-HYDROXY-2-PHENYLCYCLOPENT-2-ENONES AS HERBICIDES
C 07D 207/08	EP 2318363*	HETEROCYCLIC DERIVATIVES AS IAP BINDING COMPOUNDS
C 07D 207/14	EP 2134680*	INHIBITORS OF HISTONE DEACETYLASE
C 07D 207/16	EP 2318363*	HETEROCYCLIC DERIVATIVES AS IAP BINDING COMPOUNDS
C 07D 207/20	EP 2303880*	NOVEL TRICYCLIC DERIVATIVES, PROCESS FOR THE PREPARATION THEREOF AND PHARMACEUTICAL COMPOSITIONS CONTAINING SAME
C 07D 207/32	EP 2303882*	AZACARBOLINE DERIVATIVES, PREPARATION METHOD THEREOF AND THERAPEUTIC USE OF SAME

(51)	Број објаве европске пријаве патента	(51)
C 07D 207/323	EP 2313412*	NOVEL DERIVATIVES OF PYRROLOINDOLE INHIBITORS OF HSP90, COMPOSITIONS CONTAINING SAME, AND USE THEREOF
C 07D 207/456	EP 2315747*	METHODS AND COMPOSITIONS RELATING TO SYNTHETIC BETA-1,6 GLUCOSAMINE OLIGOSACCHARIDES
C 07D 207/48	EP 2313370*	5-HETEROCYCLYLALKYL-3-HYDROXY-2-PHENYLCYCLOPENT-2-ENONES AS HERBICIDES
C 07D 209/08	EP 2315748*	PROCESSES FOR THE PREPARATION OF 4-OXO-OCTAHYDRO-INDOLE-1-CARBOCYLIC ACID METHYL ESTER AND DERIVATIVES THEREOF
C 07D 209/10	EP 2300423*	SUBSTITUTED 7-SULFANYLMETHYL, 7-SULFINYLMETHYL AND 7-SULFONYLMETHYL INDOLES AND USE THEREOF
C 07D 209/12	EP 2300423*	SUBSTITUTED 7-SULFANYLMETHYL, 7-SULFINYLMETHYL AND 7-SULFONYLMETHYL INDOLES AND USE THEREOF
C 07D 209/14	EP 2307363*	PIPERIDYL ACRYLAMIDE ANTOGONISTS OF CCR2
C 07D 209/18	EP 2300423*	SUBSTITUTED 7-SULFANYLMETHYL, 7-SULFINYLMETHYL AND 7-SULFONYLMETHYL INDOLES AND USE THEREOF
C 07D 209/34	EP 2061758*	SUBSTITUTED 2-INDOLINONE AS PTK INHIBITORS CONTAINING A ZINC BINDING MOIETY
C 07D 209/34	EP 2265582*	NOVEL 3-AMINOALKYL-1,3-DIHYDRO-2H-INDOL-2-ONE DERIVATIVES, PREPARATION THEREOF AND THERAPEUTIC USE THEREOF.
C 07D 209/40	EP 2313412*	NOVEL DERIVATIVES OF PYRROLOINDOLE INHIBITORS OF HSP90, COMPOSITIONS CONTAINING SAME, AND USE THEREOF
C 07D 209/44	EP 2307364*	ISOINDOLONE DERIVATIVES AS MEK KINASE INHIBITORS AND METHODS OF USE
C 07D 209/46	EP 2303872*	ISOXAZOLE DERIVATIVES AND THEIR USE AS METABOTROPIC GLUTAMATE RECEPTOR POTENTIATORS
C 07D 209/52	EP 2133333	New azabicyclic derivatives, method of preparing same and pharmaceutical compositions containing them
C 07D 209/82	EP 2300425*	CYCLOALKANE[B]INDOLE ANGTAGONISTS OF PROSTAGLANDIN D2 RECEPTORS
C 07D 209/88	EP 2300425*	CYCLOALKANE[B]INDOLE ANGTAGONISTS OF PROSTAGLANDIN D2 RECEPTORS
C 07D 211/32	EP 2313370*	5-HETEROCYCLYLALKYL-3-HYDROXY-2-PHENYLCYCLOPENT-2-ENONES AS HERBICIDES
C 07D 211/34	EP 2307367*	NOVEL INHIBITORS OF PROLIFERATION AND ACTIVATION OF SIGNAL TRANSDUCER AND ACTIVATOR OF TRANSCRIPTION (STATS)
C 07D 211/38	EP 2300426*	COMPOUNDS COMPRISING A CYCLOBUTOXY GROUP
C 07D 211/46	EP 2300426*	COMPOUNDS COMPRISING A CYCLOBUTOXY GROUP
C 07D 211/58	EP 2300473*	FUMARATE SALT OF 4-BROMOPHENYL 1,4-DIAZABICYCLO[3.2.2]NONANE-4-CARBOXYLATE, CRYSTALLINE FORMS THEREOF, PREPARATION THEREOF AND THERAPEUTIC USE THEREOF
C 07D 211/60	EP 2321272*	ORGANIC COMPOUNDS
C 07D 211/70	EP 2303880*	NOVEL TRICYCLIC DERIVATIVES, PROCESS FOR THE PREPARATION THEREOF AND PHARMACEUTICAL COMPOSITIONS CONTAINING SAME
C 07D 211/90	EP 2303842*	A PROCESS FOR PRODUCING LERCANIDIPINE HC1 FORM V
C 07D 211/90	EP 2307367*	NOVEL INHIBITORS OF PROLIFERATION AND ACTIVATION OF SIGNAL TRANSDUCER AND ACTIVATOR OF TRANSCRIPTION (STATS)

(51)	Број објаве европске пријаве патента	(51)
C 07D 211/94	EP 2313370*	5-HETEROCYCLYLALKYL-3-HYDROXY-2-PHENYLCYCLOPENT-2-ENONES AS HERBICIDES
C 07D 211/96	EP 2313370*	5-HETEROCYCLYLALKYL-3-HYDROXY-2-PHENYLCYCLOPENT-2-ENONES AS HERBICIDES
C 07D 213/02	EP 2310366*	NOVEL TRIAZOLO(4,3-A)PYRIDINE DERIVATIVES, PROCESS FOR THE PREPARATION THEREOF, USE THEREOF AS MEDICAMENTS, PHARMACEUTICAL COMPOSITIONS AND NOVEL USE, IN PARTICULAR AS MET INHIBITORS
C 07D 213/04	EP 2303882*	AZACARBOLINE DERIVATIVES, PREPARATION METHOD THEREOF AND THERAPEUTIC USE OF SAME
C 07D 213/24	EP 2321278*	PYRIDINYL MODULATORS OF y-SECRETASE
C 07D 213/26	EP 2310366*	NOVEL TRIAZOLO(4,3-A)PYRIDINE DERIVATIVES, PROCESS FOR THE PREPARATION THEREOF, USE THEREOF AS MEDICAMENTS, PHARMACEUTICAL COMPOSITIONS AND NOVEL USE, IN PARTICULAR AS MET INHIBITORS
C 07D 213/36	EP 2303880*	NOVEL TRICYCLIC DERIVATIVES, PROCESS FOR THE PREPARATION THEREOF AND PHARMACEUTICAL COMPOSITIONS CONTAINING SAME
C 07D 213/36	EP 2310359*	ORGANIC COMPOUNDS
C 07D 213/40	EP 2307401*	ANTINEOPLASTIC DERIVATIVES OF 4-OXO-1,4-DIHYDRO-QUINOLINE, PREPARATION THEREOF, AND THERAPEUTIC USE THEREOF
C 07D 213/60	EP 2059508*	5,6-BISARYL-2-PYRIDINE-CARBOXAMIDE DERIVATIVES, PREPARATION AND APPLICATION THEREOF IN THERAPEUTICS AS UROTENSIN II RECEPTOR ANTAGONISTS
C 07D 213/61	EP 2310366*	NOVEL TRIAZOLO(4,3-A)PYRIDINE DERIVATIVES, PROCESS FOR THE PREPARATION THEREOF, USE THEREOF AS MEDICAMENTS, PHARMACEUTICAL COMPOSITIONS AND NOVEL USE, IN PARTICULAR AS MET INHIBITORS
C 07D 213/64	EP 2009153496	PPAR AGONIST COMPOUNDS AND PREPARATION AND USES THEREOF FOR TREATING DIABETES AND/OR DYSLIPIDEMIA
C 07D 213/64	EP 2303270*	ACYLAMINO-SUBSTITUTED FUSED CYCLOPENTANECARBOXYLIC ACID DERIVATIVES AND THEIR USE AS PHARMACEUTICALS
C 07D 213/64	EP 2310371*	PPAR AGONIST COMPOUNDS AND PREPARATION AND USES THEREOF FOR TREATING DIABETES AND/OR DYSLIPIDEMIA
C 07D 213/643	EP 2009153496	PPAR AGONIST COMPOUNDS AND PREPARATION AND USES THEREOF FOR TREATING DIABETES AND/OR DYSLIPIDEMIA
C 07D 213/643	EP 2310371*	PPAR AGONIST COMPOUNDS AND PREPARATION AND USES THEREOF FOR TREATING DIABETES AND/OR DYSLIPIDEMIA
C 07D 213/70	EP 2009153496	PPAR AGONIST COMPOUNDS AND PREPARATION AND USES THEREOF FOR TREATING DIABETES AND/OR DYSLIPIDEMIA
C 07D 213/70	EP 2307343*	PROCESS FOR THE EPIMERIZATION OF ATOVAQUONE ISOMER, ATOVAQUONE INTERMEDIATES AND MIXTURE THEREOF
C 07D 213/70	EP 2307373*	A PROCESS FOR PREPARING ATOVAQUONE AND ASSOCIATE INTERMEDIATES
C 07D 213/70	EP 2310371*	PPAR AGONIST COMPOUNDS AND PREPARATION AND USES THEREOF FOR TREATING DIABETES AND/OR DYSLIPIDEMIA
C 07D 213/71	EP 2305641	SULFONAMIDE COMPOUND OR SALT THEREOF
C 07D 213/73	EP 2300428*	AMINOPYRIDINE DERIVATIVES

(51)	Број објаве европске пријаве патента	(51)
C 07D 213/74	EP 2009153496	PPAR AGONIST COMPOUNDS AND PREPARATION AND USES THEREOF FOR TREATING DIABETES AND/OR DYSLIPIDEMIA
C 07D 213/74	EP 2307374*	PIPERAZIN-1-YL-TRIFLUOROMETHYL-SUBSTITUTED-PYRIDINES AS FAST DISSOCIATING DOPAMINE 2 RECEPTOR ANTAGONISTS
C 07D 213/74	EP 2310371*	PPAR AGONIST COMPOUNDS AND PREPARATION AND USES THEREOF FOR TREATING DIABETES AND/OR DYSLIPIDEMIA
C 07D 213/74	EP 2311807	Compounds and composition as protein kinase inhibitors
C 07D 213/75	EP 2119706	PYRIDINE OR PYRIMIDINE DERIVATIVE HAVING EXCELLENT CELL GROWTH INHIBITION EFFECT AND EXCELLENT ANTI-TUMOR EFFECT ON CELL STRAIN HAVING AMPLIFICATION OF HGFR GENE
C 07D 213/75	EP 2300426*	COMPOUNDS COMPRISING A CYCLOBUTOXY GROUP
C 07D 213/81	EP 2310356*	ADAMANTYL DIAMIDE DERIVATIVES AND USES OF SAME
C 07D 213/81	EP 2314567	Inhibitors of the microsomal prostaglandin E2 synthase-1
C 07D 213/82	EP 2307401*	ANTINEOPLASTIC DERIVATIVES OF 4-OXO-1,4-DIHYDRO-QUINOLINE, PREPARATION THEREOF, AND THERAPEUTIC USE THEREOF
C 07D 213/82	EP 2314567	Inhibitors of the microsomal prostaglandin E2 synthase-1
C 07D 213/82	EP 2315751*	ALKYNYL ALCOHOLS AS KINASE INHIBITORS
C 07D 213/84	EP 2307374*	PIPERAZIN-1-YL-TRIFLUOROMETHYL-SUBSTITUTED-PYRIDINES AS FAST DISSOCIATING DOPAMINE 2 RECEPTOR ANTAGONISTS
C 07D 213/89	EP 2307373*	A PROCESS FOR PREPARING ATOVAQUONE AND ASSOCIATE INTERMEDIATES
C 07D 215/14	EP 2099759*	ANTIBACTERIAL QUINOLINE DERIVATIVES
C 07D 215/227	EP 2297131*	DI-SUBSTITUTED PHENYL COMPOUNDS AS PHOSPHODIESTERASE 10 INHIBITORS
C 07D 215/48	EP 2310356*	ADAMANTYL DIAMIDE DERIVATIVES AND USES OF SAME
C 07D 215/56	EP 2307401*	ANTINEOPLASTIC DERIVATIVES OF 4-OXO-1,4-DIHYDRO-QUINOLINE, PREPARATION THEREOF, AND THERAPEUTIC USE THEREOF
C 07D 217/02	EP 2313374*	6-SUBSTITUTED ISOQUINOLINES AND ISOQUINOLINONES
C 07D 217/04	EP 2318355*	1,1'-DIADAMANTYL CARBOXYLIC ACIDS, MEDICAMENTS CONTAINING SUCH COMPOUNDS AND THEIR USE
C 07D 217/06	EP 2311810	AMIDINE DERIVATIVE
C 07D 217/22	EP 2313374*	6-SUBSTITUTED ISOQUINOLINES AND ISOQUINOLINONES
C 07D 217/24	EP 2303845*	BI-AND POLYCYCLIC SUBSTITUTED ISOQUINOLINE AND ISOQUINOLINE DERIVATIVES AS RHO KINASE INHIBITORS
C 07D 217/24	EP 2303846*	SUBSTITUTED ISOQUINOLINES AND ISOQUINOLINONES AS RHO KINASE INHIBITORS
C 07D 217/24	EP 2313374*	6-SUBSTITUTED ISOQUINOLINES AND ISOQUINOLINONES
C 07D 221/26	EP 2318372*	LARGE SUBSTITUENT, NON-PHENOLIC AMINE OPIOIDS
C 07D 231/06	EP 2307381*	NEW DRUGS FOR INHIBITING AGGREGATION OF PROTEINS INVOLVED IN DISEASES LINKED TO PROTEIN AGGREGATION AND/OR NEURODEGENERATIVE DISEASES
C 07D 231/12	EP 2303873*	BENZOXAZINONE DERIVATIVES ACTING AS BETA2-ADRENORECEPTOR AGONIST FOR THE TREATMENT OF RESPIRATORY DISORDERS

(51)	Број објаве европске пријаве патента	(51)
C 07D 231/12	EP 2307381*	NEW DRUGS FOR INHIBITING AGGREGATION OF PROTEINS INVOLVED IN DISEASES LINKED TO PROTEIN AGGREGATION AND/OR NEURODEGENERATIVE DISEASES
C 07D 231/12	EP 2310359*	ORGANIC COMPOUNDS
C 07D 231/14	EP 2310356*	ADAMANTYL DIAMIDE DERIVATIVES AND USES OF SAME
C 07D 231/40	EP 2118067*	NICOTINIC ACETYLCHOLINE RECEPTOR MODULATORS
C 07D 231/56	EP 2141150	BICYCLIC COMPOUND AND PHARMACEUTICAL USE THEREOF
C 07D 231/56	EP 2310373*	BICYCLIC HETEROCYCLES AS MEK KINASE INHIBITORS
C 07D 233/22	EP 2307381*	NEW DRUGS FOR INHIBITING AGGREGATION OF PROTEINS INVOLVED IN DISEASES LINKED TO PROTEIN AGGREGATION AND/OR NEURODEGENERATIVE DISEASES
C 07D 233/64	EP 2313412*	NOVEL DERIVATIVES OF PYRROLOINDOLE INHIBITORS OF HSP90, COMPOSITIONS CONTAINING SAME, AND USE THEREOF
C 07D 233/88	EP 2315751*	ALKYNYL ALCOHOLS AS KINASE INHIBITORS
C 07D 233/90	EP 2297114*	HETEROCYCLIC COMPOUND AND USE THEREOF
C 07D 235/06	EP 2124563*	BENZIMIDAZOLE TRPV1 INHIBITORS
C 07D 235/12	EP 2124563*	BENZIMIDAZOLE TRPV1 INHIBITORS
C 07D 235/14	EP 2124563*	BENZIMIDAZOLE TRPV1 INHIBITORS
C 07D 235/26	EP 2124563*	BENZIMIDAZOLE TRPV1 INHIBITORS
C 07D 235/30	EP 2124563*	BENZIMIDAZOLE TRPV1 INHIBITORS
C 07D 237/20	EP 2310374*	SUBSTITUTED 6- (1-PIPERAZINYL) -PYRIDAZINES AS 5-HT6 RECEPTOR ANTAGONISTS
C 07D 237/22	EP 2310374*	SUBSTITUTED 6- (1-PIPERAZINYL) -PYRIDAZINES AS 5-HT6 RECEPTOR ANTAGONISTS
C 07D 237/28	EP 2313376*	SUBSTITUTED 1-BENZYL-CINNOLIN-4(1H)-ONE DERIVATIVES, PREPARATION THEREOF, AND THERAPEUTIC USE THEREOF
C 07D 237/32	EP 2120579*	INHIBITORS OF POLY(ADP-RIBOSE)POLYMERASE
C 07D 237/36	EP 2313376*	SUBSTITUTED 1-BENZYL-CINNOLIN-4(1H)-ONE DERIVATIVES, PREPARATION THEREOF, AND THERAPEUTIC USE THEREOF
C 07D 239/02	EP 2318377*	PYRIMIDINE COMPOUNDS, COMPOSITIONS AND METHODS OF USE
C 07D 239/22	EP 2300440*	3,4-DIHYDROPYRIMIDINE TRPA1 ANTAGONISTS
C 07D 239/26	EP 2221305	Method for synthesizing intermediate compound for synthesizing a pharmaceutical agent
C 07D 239/48	EP 2311807	Compounds and composition as protein kinase inhibitors
C 07D 239/70	EP 2315755*	SYNTHESIS OF DIHYDROTHIENO[3,2-d]PYRIMIDINE DIOLS AND SIMILAR PYRIMIDINE DIOLS
C 07D 239/84	EP 2297116*	SUBSTITUTED QUINAZOLINES
C 07D 239/88	EP 2061772*	MULTI-FUNCTIONAL SMALL MOLECULES AS ANTI-PROLIFERATIVE AGENTS
C 07D 239/93	EP 2061772*	MULTI-FUNCTIONAL SMALL MOLECULES AS ANTI-PROLIFERATIVE AGENTS
C 07D 239/95	EP 2300441*	CRYSTALLINE SALT FORMS OF ANTIFOLATE COMPOUNDS AND METHODS OF MANUFACTURING THEREOF
C 07D 239/95	EP 2311807	Compounds and composition as protein kinase inhibitors
C 07D 241/04	EP 2303880*	NOVEL TRICYCLIC DERIVATIVES, PROCESS FOR THE PREPARATION THEREOF AND PHARMACEUTICAL COMPOSITIONS CONTAINING SAME
C 07D 241/10	EP 2059508*	5,6-BISARYL-2-PYRIDINE-CARBOXAMIDE DERIVATIVES, PREPARATION AND APPLICATION THEREOF IN THERAPEUTICS AS UROTENSIN II RECEPTOR ANTAGONISTS

(51)	Број објаве европске пријаве патента	(51)
C 07D 241/44	EP 2310356*	ADAMANTYL DIAMIDE DERIVATIVES AND USES OF SAME
C 07D 241/52	EP 2321286*	SUBSTITUTED N-OXIDE PYRAZINE DERIVATIVES
C 07D 243/08	EP 2300473*	FUMARATE SALT OF 4-BROMOPHENYL 1,4-DIAZABICYCLO[3.2.2]NONANE-4-CARBOXYLATE, CRYSTALLINE FORMS THEREOF, PREPARATION THEREOF AND THERAPEUTIC USE THEREOF
C 07D 243/08	EP 2310359*	ORGANIC COMPOUNDS
C 07D 249/08	EP 2298747	TRIAZOLE DERIVATIVE OR SALT THEREOF
C 07D 249/08	EP 2300443*	TRIAZOLE DERIVATIVES USEFUL FOR THE TREATMENT OF DISEASES
C 07D 249/12	EP 2295416	Triazole compounds that modulate HSP90 activity
C 07D 249/12	EP 2298748	Triazole compounds that modulate HSP90 activity
C 07D 249/12	EP 2310366*	NOVEL TRIAZOLO(4,3-A)PYRIDINE DERIVATIVES, PROCESS FOR THE PREPARATION THEREOF, USE THEREOF AS MEDICAMENTS, PHARMACEUTICAL COMPOSITIONS AND NOVEL USE, IN PARTICULAR AS MET INHIBITORS
C 07D 251/10	EP 2300444*	PROCESS FOR THE SYNTHESIS OF 3,6-DIHYDRO-1,3,5-TRIAZINE DERIVATIVES
C 07D 253/07	EP 2300455*	SALTS OF 2-FLUORO-N-METHYL-4-[7-(QUINOLIN-6-YL-METHYL) - IMIDAZO [1, 2-B] [1, 2, 4] TRIAZIN-2-YL] BENZAMIDE AND PROCESSES RELATED TO PREPARING THE SAME
C 07D 257/04	EP 2316821	Process for the manufacture of organic compounds
C 07D 261/08	EP 2307381*	NEW DRUGS FOR INHIBITING AGGREGATION OF PROTEINS INVOLVED IN DISEASES LINKED TO PROTEIN AGGREGATION AND/OR NEURODEGENERATIVE DISEASES
C 07D 261/08	EP 2310359*	ORGANIC COMPOUNDS
C 07D 263/28	EP 2321287*	4,5-DIHYDRO-OXAZOL-2-YL DERIVATIVES
C 07D 263/54	EP 2303850*	NOVEL POTASSIUM CHANNEL BLOCKERS AND USES THEREOF
C 07D 263/56	EP 2303850*	NOVEL POTASSIUM CHANNEL BLOCKERS AND USES THEREOF
C 07D 265/30	EP 2221304	Method for synthesizing intermediate compound for synthesizing a pharmaceutical agent
C 07D 265/32	EP 2221304	Method for synthesizing intermediate compound for synthesizing a pharmaceutical agent
C 07D 265/36	EP 2303851*	NOVEL PHENOLIC AND CATECHOLIC AMINES AND PRODRUGS THEREOF
C 07D 271/06	EP 2307381*	NEW DRUGS FOR INHIBITING AGGREGATION OF PROTEINS INVOLVED IN DISEASES LINKED TO PROTEIN AGGREGATION AND/OR NEURODEGENERATIVE DISEASES
C 07D 271/08	EP 2315756*	1,2,5-OXADIAZOLES AS INHIBITORS OF INDOLEAMINE 2,3-DIOXYGENASE
C 07D 273/01	EP 2300462*	MACROCYCLIC UREA AND SULFAMIDE DERIVATIVES AS INHIBITORS OF TAFIA
C 07D 275/04	EP 2310373*	BICYCLIC HETEROCYCLES AS MEK KINASE INHIBITORS
C 07D 277/20	EP 2305641	SULFONAMIDE COMPOUND OR SALT THEREOF
C 07D 277/24	EP 2313382*	5-(4-METHANESULFONYL-PHENYL)-THIAZOLE DERIVATIVES FOR THE TREATMENT OF ACUTE AND CHRONIC INFLAMMATORY DISEASES
C 07D 277/34	EP 2310010*	CHEMICAL COMPOUNDS 251
C 07D 277/36	EP 2305641	SULFONAMIDE COMPOUND OR SALT THEREOF
C 07D 277/42	EP 2303854*	PROCESS FOR MAKING SUBSTITUTED 2-AMINO-THIAZOLONES
C 07D 277/54	EP 2321290*	ASYMMETRIC PROCESS FOR MAKING SUBSTITUTED 2-AMINO-THIAZOLONES

(51)	Број објаве европске пријаве патента	(51)
C 07D 277/56	EP 2303270*	ACYLAMINO-SUBSTITUTED FUSED CYCLOPENTANECARBOXYLIC ACID DERIVATIVES AND THEIR USE AS PHARMACEUTICALS
C 07D 277/56	EP 2305641	SULFONAMIDE COMPOUND OR SALT THEREOF
C 07D 277/82	EP 2310366*	NOVEL TRIAZOLO(4,3-A)PYRIDINE DERIVATIVES, PROCESS FOR THE PREPARATION THEREOF, USE THEREOF AS MEDICAMENTS, PHARMACEUTICAL COMPOSITIONS AND NOVEL USE, IN PARTICULAR AS MET INHIBITORS
C 07D 277/82	EP 2318382*	NOVEL IMIDAZO[1,2-A]PYRIDINE DERIVATIVES, METHOD FOR THE PREPARATION THEREOF, USE THEREOF AS MEDICAMENTS, PHARMACEUTICAL COMPOSITIONS AND NOVEL USE IN PARTICULAR AS MET INHIBITORS
C 07D 279/06	EP 2297120*	AMINODIHYDROTHIAZINE DERIVATIVES AS BACE INHIBITORS FOR THE TREATMENT OF ALZHEIMER'S DISEASE
C 07D 281/02	EP 2311464	Agents for preventing and treating disorders involving modulation of the ryr receptors
C 07D 281/16	EP 2307389*	DIBENZOTHIAZEPINE DERIVATIVES AND USE THEREOF
C 07D 295/02	EP 2297131*	DI-SUBSTITUTED PHENYL COMPOUNDS AS PHOSPHODIESTERASE 10 INHIBITORS
C 07D 295/096	EP 2300426*	COMPOUNDS COMPRISING A CYCLOBUTOXY GROUP
C 07D 295/155	EP 2314567	Inhibitors of the microsomal prostaglandin E2 synthase-1
C 07D 295/185	EP 2297122*	NEW PROCESS FOR THE PREPARATION OF LEVOCETIRIZINE AND INTERMEDIATES THEREOF
C 07D 295/192	EP 2300426*	COMPOUNDS COMPRISING A CYCLOBUTOXY GROUP
C 07D 307/12	EP 2313370*	5-HETEROCYCLYLALKYL-3-HYDROXY-2-PHENYLCYCLOPENT-2-ENONES AS HERBICIDES
C 07D 307/14	EP 2310359*	ORGANIC COMPOUNDS
C 07D 307/26	EP 2313370*	5-HETEROCYCLYLALKYL-3-HYDROXY-2-PHENYLCYCLOPENT-2-ENONES AS HERBICIDES
C 07D 307/52	EP 2310359*	ORGANIC COMPOUNDS
C 07D 307/64	EP 2305641	SULFONAMIDE COMPOUND OR SALT THEREOF
C 07D 307/87	EP 2061753*	METHOD FOR MANUFACTURE OF ESCITALOPRAM
C 07D 307/94	EP 2316832	Cyclopamine analogues and methods of use thereof
C 07D 307/94	EP 2316833	Process for the preparation of Cyclopamine analogue compounds
C 07D 309/04	EP 2074108*	RENIN INHIBITORS
C 07D 309/04	EP 2313370*	5-HETEROCYCLYLALKYL-3-HYDROXY-2-PHENYLCYCLOPENT-2-ENONES AS HERBICIDES
C 07D 309/10	EP 2101731*	ENDOXIFEN METHODS AND COMPOSITIONS
C 07D 309/12	EP 2313370*	5-HETEROCYCLYLALKYL-3-HYDROXY-2-PHENYLCYCLOPENT-2-ENONES AS HERBICIDES
C 07D 309/32	EP 2313387*	NOVEL HERBICIDES
C 07D 309/32	EP 2313388*	NOVEL HERBICIDES
C 07D 311/04	EP 2307397*	6-SUBSTITUTED PHENOXYCHROMAN CARBOXYLIC ACID DERIVATIVES
C 07D 317/72	EP 2298755	METHOD OF PRODUCING BICYCLO[3.1.0]HEXANE DERIVATIVE USING ENZYME
C 07D 333/20	EP 2303244*	GASTRO-RESISTANT PHARMACEUTICAL ORAL COMPOSITIONS COMPRISING DULOXETINE OR ITS PHARMACEUTICALLY ACCEPTABLE DERIVATIVES
C 07D 333/32	EP 2303270*	ACYLAMINO-SUBSTITUTED FUSED CYCLOPENTANECARBOXYLIC ACID DERIVATIVES AND THEIR USE AS PHARMACEUTICALS
C 07D 333/36	EP 2310359*	ORGANIC COMPOUNDS
C 07D 333/38	EP 2310356*	ADAMANTYL DIAMIDE DERIVATIVES AND USES OF SAME
C 07D 333/38	EP 2314567	Inhibitors of the microsomal prostaglandin E2 synthase-1
C 07D 333/78	EP 2319840	AMINOPROPYLIDENE DERIVATIVE

(51)	Број објаве европске пријаве патента	(51)
C 07D 333/80	EP 2303270*	ACYLAMINO-SUBSTITUTED FUSED CYCLOPENTANECARBOXYLIC ACID DERIVATIVES AND THEIR USE AS PHARMACEUTICALS
C 07D 335/02	EP 2313370*	5-HETEROCYCLYLALKYL-3-HYDROXY-2-PHENYLCYCLOPENT-2-ENONES AS HERBICIDES
C 07D 335/02	EP 2313387*	NOVEL HERBICIDES
C 07D 335/02	EP 2313388*	NOVEL HERBICIDES
C 07D 401/00	EP 2069324*	FUSED AMINO PYRIDINE AS HSP90 INHIBITORS
C 07D 401/04	EP 2059508*	5,6-BISARYL-2-PYRIDINE-CARBOXAMIDE DERIVATIVES, PREPARATION AND APPLICATION THEREOF IN THERAPEUTICS AS UROTENSIN II RECEPTOR ANTAGONISTS
C 07D 401/04	EP 2099759*	ANTIBACTERIAL QUINOLINE DERIVATIVES
C 07D 401/04	EP 2118067*	NICOTINIC ACETYLCHOLINE RECEPTOR MODULATORS
C 07D 401/04	EP 2134680*	INHIBITORS OF HISTONE DEACETYLASE
C 07D 401/04	EP 2295416	Triazole compounds that modulate HSP90 activity
C 07D 401/04	EP 2298747	TRIAZOLE DERIVATIVE OR SALT THEREOF
C 07D 401/04	EP 2298748	Triazole compounds that modulate HSP90 activity
C 07D 401/04	EP 2300440*	3,4-DIHYDROPYRIMIDINE TRPA1 ANTAGONISTS
C 07D 401/04	EP 2300443*	TRIAZOLE DERIVATIVES USEFUL FOR THE TREATMENT OF DISEASES
C 07D 401/04	EP 2300452*	5-[5-[2-(3,5-BIS(TRIFLUOROMETHYL)PHENYL)-2-METHYLPROPANOYLMETHYLAMINO]-4-(4-FLUORO-2-METHYLPHENYL)]-2-PYRIDINYL-2-ALKYL-PROLINAMIDE AS NK1 RECEPTOR ANTAGONISTS
C 07D 401/04	EP 2307400*	INHIBITORS OF PI3 KINASE
C 07D 401/04	EP 2313391*	ISOQUINOLINONE DERIVATIVES AS NK3 ANTAGONISTS
C 07D 401/04	EP 2321278*	PYRIDINYL MODULATORS OF y-SECRETASE
C 07D 401/04	EP 2321286*	SUBSTITUTED N-OXIDE PYRAZINE DERIVATIVES
C 07D 401/04	EP 2321295*	4-(PYRIDIN-4-YL)-1H-[1,3,5]TRIAZIN-2-ONE DERIVATIVES AS GSK3-BETA INHIBITORS FOR THE TREATMENT OF NEURODEGENERATIVE DISEASES
C 07D 401/06	EP 2265582*	NOVEL 3-AMINOALKYL-1,3-DIHYDRO-2H-INDOL-2-ONE DERIVATIVES, PREPARATION THEREOF AND THERAPEUTIC USE THEREOF.
C 07D 401/06	EP 2300422*	AZETIDINES AND CYCLOBUTANES AS HISTAMINE H3 RECEPTOR ANTAGONISTS
C 07D 401/06	EP 2300443*	TRIAZOLE DERIVATIVES USEFUL FOR THE TREATMENT OF DISEASES
C 07D 401/06	EP 2313370*	5-HETEROCYCLYLALKYL-3-HYDROXY-2-PHENYLCYCLOPENT-2-ENONES AS HERBICIDES
C 07D 401/10	EP 2297131*	DI-SUBSTITUTED PHENYL COMPOUNDS AS PHOSPHODIESTERASE 10 INHIBITORS
C 07D 401/10	EP 2297142*	NOVEL SUBSTITUTED PYRIDIN-2-ONES AND PYRIDAZIN-3-ONES
C 07D 401/10	EP 2300455*	SALTS OF 2-FLUORO-N-METHYL-4-[7-(QUINOLIN-6-YL-METHYL) - IMIDAZO [1, 2-B] [1, 2, 4] TRIAZIN-2-YL] BENZAMIDE AND PROCESSES RELATED TO PREPARING THE SAME
C 07D 401/12	EP 2114920*	SUBSTITUTED ISOQUINOLINE AND ISOQUINOLINONE DERIVATIVES
C 07D 401/12	EP 2119706	PYRIDINE OR PYRIMIDINE DERIVATIVE HAVING EXCELLENT CELL GROWTH INHIBITION EFFECT AND EXCELLENT ANTI-TUMOR EFFECT ON CELL STRAIN HAVING AMPLIFICATION OF HGFR GENE
C 07D 401/12	EP 2124563*	BENZIMIDAZOLE TRPV1 INHIBITORS
C 07D 401/12	EP 2134680*	INHIBITORS OF HISTONE DEACETYLASE
C 07D 401/12	EP 2297114*	HETEROCYCLIC COMPOUND AND USE THEREOF
C 07D 401/12	EP 2297133*	1, 2 DISUBSTITUTED HETEROCYCLIC COMPOUNDS
C 07D 401/12	EP 2300422*	AZETIDINES AND CYCLOBUTANES AS HISTAMINE H3 RECEPTOR ANTAGONISTS

(51)	Број објаве европске пријаве патента	(51)
C 07D 401/12	EP 2300428*	AMINOPYRIDINE DERIVATIVES
C 07D 401/12	EP 2300443*	TRIAZOLE DERIVATIVES USEFUL FOR THE TREATMENT OF DISEASES
C 07D 401/12	EP 2300457*	SUBSTITUTED PYRROLES AND METHODS OF USE
C 07D 401/12	EP 2303861*	PYRIDINE COMPOUNDS
C 07D 401/12	EP 2303863*	5- AND 6-MEMBERED HETEROCYCLIC COMPOUNDS
C 07D 401/12	EP 2303866*	CRYSTALLINE FORMS OF RABEPRAZOLE SODIUM
C 07D 401/12	EP 2307401*	ANTINEOPLASTIC DERIVATIVES OF 4-OXO-1,4-DIHYDRO-QUINOLINE, PREPARATION THEREOF, AND THERAPEUTIC USE THEREOF
C 07D 401/12	EP 2310356*	ADAMANTYL DIAMIDE DERIVATIVES AND USES OF SAME
C 07D 401/12	EP 2310374*	SUBSTITUTED 6- (1-PIPERAZINYL) -PYRIDAZINES AS 5-HT6 RECEPTOR ANTAGONISTS
C 07D 401/12	EP 2310382*	AMIDOPHENOXYINDAZOLES USEFUL AS INHIBITORS OF C-MET
C 07D 401/12	EP 2311807	Compounds and composition as protein kinase inhibitors
C 07D 401/12	EP 2311810	AMIDINE DERIVATIVE
C 07D 401/12	EP 2313392*	AZETIDINE POLYSUBSTITUTED COMPOUNDS, PREPARATION THEREOF, AND THERAPEUTIC APPLICATION THEREOF
C 07D 401/12	EP 2313393*	AZETIDINE POLYSUBSTITUTED COMPOUNDS, PREPARATION THEREOF, AND THERAPEUTIC APPLICATION THEREOF
C 07D 401/12	EP 2315763*	BENZIMIDAZOLES AND RELATED ANALOGS AS SIRTUIN MODULATORS
C 07D 401/12	EP 2318389*	PYRIDAZINE DERIVATIVES AS SMO INHIBITORS
C 07D 401/12	EP 2321298*	AURORA KINASE MODULATORS AND METHODS OF USE
C 07D 401/14	EP 2114920*	SUBSTITUTED ISOQUINOLINE AND ISOQUINOLINONE DERIVATIVES
C 07D 401/14	EP 2119706	PYRIDINE OR PYRIMIDINE DERIVATIVE HAVING EXCELLENT CELL GROWTH INHIBITION EFFECT AND EXCELLENT ANTI-TUMOR EFFECT ON CELL STRAIN HAVING AMPLIFICATION OF HGFR GENE
C 07D 401/14	EP 2297114*	HETEROCYCLIC COMPOUND AND USE THEREOF
C 07D 401/14	EP 2297133*	1, 2 DISUBSTITUTED HETEROCYCLIC COMPOUNDS
C 07D 401/14	EP 2297142*	NOVEL SUBSTITUTED PYRIDIN-2-ONES AND PYRIDAZIN-3-ONES
C 07D 401/14	EP 2300428*	AMINOPYRIDINE DERIVATIVES
C 07D 401/14	EP 2300443*	TRIAZOLE DERIVATIVES USEFUL FOR THE TREATMENT OF DISEASES
C 07D 401/14	EP 2303861*	PYRIDINE COMPOUNDS
C 07D 401/14	EP 2303863*	5- AND 6-MEMBERED HETEROCYCLIC COMPOUNDS
C 07D 401/14	EP 2307400*	INHIBITORS OF PI3 KINASE
C 07D 401/14	EP 2307401*	ANTINEOPLASTIC DERIVATIVES OF 4-OXO-1,4-DIHYDRO-QUINOLINE, PREPARATION THEREOF, AND THERAPEUTIC USE THEREOF
C 07D 401/14	EP 2308869	AZOLE COMPOUND
C 07D 401/14	EP 2310356*	ADAMANTYL DIAMIDE DERIVATIVES AND USES OF SAME
C 07D 401/14	EP 2310382*	AMIDOPHENOXYINDAZOLES USEFUL AS INHIBITORS OF C-MET
C 07D 401/14	EP 2311807	Compounds and composition as protein kinase inhibitors
C 07D 401/14	EP 2311810	AMIDINE DERIVATIVE
C 07D 401/14	EP 2313391*	ISOQUINOLINONE DERIVATIVES AS NK3 ANTAGONISTS
C 07D 401/14	EP 2315763*	BENZIMIDAZOLES AND RELATED ANALOGS AS SIRTUIN MODULATORS
C 07D 401/14	EP 2318363*	HETEROCYCLIC DERIVATIVES AS IAP BINDING COMPOUNDS
C 07D 401/14	EP 2318389*	PYRIDAZINE DERIVATIVES AS SMO INHIBITORS
C 07D 401/14	EP 2318390*	PYRROLE COMPOUNDS

(51)	Број објаве европске пријаве патента	(51)
C 07D 401/14	EP 2318392*	PYRIMIDINE DERIVATIVES AS KINASE INHIBITORS
C 07D 403/04	EP 2118067*	NICOTINIC ACETYLCHOLINE RECEPTOR MODULATORS
C 07D 403/04	EP 2295416	Triazole compounds that modulate HSP90 activity
C 07D 403/04	EP 2298748	Triazole compounds that modulate HSP90 activity
C 07D 403/04	EP 2303869*	PROCESS FOR THE PREPARATION OF BENZOIMIDAZOL-2-YL PYRIMIDINE DERIVATIVES
C 07D 403/04	EP 2313391*	ISOQUINOLINONE DERIVATIVES AS NK3 ANTAGONISTS
C 07D 403/06	EP 2265582*	NOVEL 3-AMINOALKYL-1,3-DIHYDRO-2H-INDOL-2-ONE DERIVATIVES, PREPARATION THEREOF AND THERAPEUTIC USE THEREOF.
C 07D 403/06	EP 2308870	2-oxo-1-pyrrolidine deriatives, processes for preparing them and their uses
C 07D 403/10	EP 2120579*	INHIBITORS OF POLY(ADP-RIBOSE)POLYMERASE
C 07D 403/10	EP 2318395*	INHIBITORS OF IAP
C 07D 403/12	EP 2118067*	NICOTINIC ACETYLCHOLINE RECEPTOR MODULATORS
C 07D 403/12	EP 2119706	PYRIDINE OR PYRIMIDINE DERIVATIVE HAVING EXCELLENT CELL GROWTH INHIBITION EFFECT AND EXCELLENT ANTI-TUMOR EFFECT ON CELL STRAIN HAVING AMPLIFICATION OF HGFR GENE
C 07D 403/12	EP 2120579*	INHIBITORS OF POLY(ADP-RIBOSE)POLYMERASE
C 07D 403/12	EP 2300422*	AZETIDINES AND CYCLOBUTANES AS HISTAMINE H3 RECEPTOR ANTAGONISTS
C 07D 403/12	EP 2307363*	PIPERIDYL ACRYLAMIDE ANTOGONISTS OF CCR2
C 07D 403/12	EP 2307403*	COSMETIC COMPOSITION, COSMETIC TREATMENT METHOD AND 4-OXO-1,4-DIHYDROPYRIMIDIN-2-YL COMPOUNDS
C 07D 403/12	EP 2310356*	ADAMANTYL DIAMIDE DERIVATIVES AND USES OF SAME
C 07D 403/12	EP 2310373*	BICYCLIC HETEROCYCLES AS MEK KINASE INHIBITORS
C 07D 403/12	EP 2310382*	AMIDOPHENOXYINDAZOLES USEFUL AS INHIBITORS OF C-MET
C 07D 403/12	EP 2311807	Compounds and composition as protein kinase inhibitors
C 07D 403/12	EP 2313392*	AZETIDINE POLYSUBSTITUTED COMPOUNDS, PREPARATION THEREOF, AND THERAPEUTIC APPLICATION THEREOF
C 07D 403/12	EP 2313393*	AZETIDINE POLYSUBSTITUTED COMPOUNDS, PREPARATION THEREOF, AND THERAPEUTIC APPLICATION THEREOF
C 07D 403/12	EP 2315763*	BENZIMIDAZOLES AND RELATED ANALOGS AS SIRTUIN MODULATORS
C 07D 403/12	EP 2318389*	PYRIDAZINE DERIVATIVES AS SMO INHIBITORS
C 07D 403/12	EP 2318392*	PYRIMIDINE DERIVATIVES AS KINASE INHIBITORS
C 07D 403/12	EP 2318395*	INHIBITORS OF IAP
C 07D 403/12	EP 2321298*	AURORA KINASE MODULATORS AND METHODS OF USE
C 07D 403/12	EP 2321301*	NEW HETEROCYCLIC CARBOXAMIDES FOR USE AS THROMBIN INHIBITORS
C 07D 403/14	EP 2118067*	NICOTINIC ACETYLCHOLINE RECEPTOR MODULATORS
C 07D 403/14	EP 2120579*	INHIBITORS OF POLY(ADP-RIBOSE)POLYMERASE
C 07D 403/14	EP 2300422*	AZETIDINES AND CYCLOBUTANES AS HISTAMINE H3 RECEPTOR ANTAGONISTS
C 07D 403/14	EP 2307403*	COSMETIC COMPOSITION, COSMETIC TREATMENT METHOD AND 4-OXO-1,4-DIHYDROPYRIMIDIN-2-YL COMPOUNDS
C 07D 403/14	EP 2310382*	AMIDOPHENOXYINDAZOLES USEFUL AS INHIBITORS OF C-MET
C 07D 403/14	EP 2311807	Compounds and composition as protein kinase inhibitors
C 07D 403/14	EP 2315763*	BENZIMIDAZOLES AND RELATED ANALOGS AS SIRTUIN MODULATORS
C 07D 403/14	EP 2318392*	PYRIMIDINE DERIVATIVES AS KINASE INHIBITORS
C 07D 403/14	EP 2321298*	AURORA KINASE MODULATORS AND METHODS OF USE

(51)	Број објаве европске пријаве патента	(51)
C 07D 405/04	EP 2079732*	3- (1, 3-BENZ0DI0X0L-5-YL) -6- (4-CYCLOPROPYLPIPERAZIN-1-YL) -PYRIDAZINE, ITS SALTS AND SOLVATES AND ITS USE AS HISTAMINE H3 RECEPTOR ANTAGONIST
C 07D 405/04	EP 2295416	Triazole compounds that modulate HSP90 activity
C 07D 405/04	EP 2298748	Triazole compounds that modulate HSP90 activity
C 07D 405/04	EP 2300440*	3,4-DIHYDROPYRIMIDINE TRPA1 ANTAGONISTS
C 07D 405/04	EP 2313376*	SUBSTITUTED 1-BENZYL-CINNOLIN-4(1H)-ONE DERIVATIVES, PREPARATION THEREOF, AND THERAPEUTIC USE THEREOF
C 07D 405/04	EP 2316832	Cyclopamine analogues and methods of use thereof
C 07D 405/04	EP 2316833	Process for the preparation of Cyclopamine analogue compounds
C 07D 405/06	EP 2300423*	SUBSTITUTED 7-SULFANYLMETHYL, 7-SULFINYLMETHYL AND 7-SULFONYLMETHYL INDOLES AND USE THEREOF
C 07D 405/06	EP 2313370*	5-HETEROCYCLYLALKYL-3-HYDROXY-2-PHENYLCYCLOPENT-2-ENONES AS HERBICIDES
C 07D 405/10	EP 2313387*	NOVEL HERBICIDES
C 07D 405/10	EP 2313388*	NOVEL HERBICIDES
C 07D 405/12	EP 2074108*	RENIN INHIBITORS
C 07D 405/12	EP 2124563*	BENZIMIDAZOLE TRPV1 INHIBITORS
C 07D 405/12	EP 2134680*	INHIBITORS OF HISTONE DEACETYLASE
C 07D 405/12	EP 2297133*	1, 2 DISUBSTITUTED HETEROCYCLIC COMPOUNDS
C 07D 405/12	EP 2303863*	5- AND 6-MEMBERED HETEROCYCLIC COMPOUNDS
C 07 D 405/12	EP 2305641	SULFONAMIDE COMPOUND OR SALT THEREOF
C 07D 405/12	EP 2307397*	6-SUBSTITUTED PHENOXYCHROMAN CARBOXYLIC ACID DERIVATIVES
C 07D 405/12	EP 2310356*	ADAMANTYL DIAMIDE DERIVATIVES AND USES OF SAME
C 07D 405/12	EP 2310373*	BICYCLIC HETEROCYCLES AS MEK KINASE INHIBITORS
C 07D 405/12	EP 2313374*	6-SUBSTITUTED ISOQUINOLINES AND ISOQUINOLINONES
C 07D 405/12	EP 2315763*	BENZIMIDAZOLES AND RELATED ANALOGS AS SIRTUIN MODULATORS
C 07D 405/14	EP 2303861*	PYRIDINE COMPOUNDS
C 07D 405/14	EP 2303863*	5- AND 6-MEMBERED HETEROCYCLIC COMPOUNDS
C 07D 405/14	EP 2310356*	ADAMANTYL DIAMIDE DERIVATIVES AND USES OF SAME
C 07D 405/14	EP 2310382*	AMIDOPHENOXYINDAZOLES USEFUL AS INHIBITORS OF C-MET
C 07D 405/14	EP 2315763*	BENZIMIDAZOLES AND RELATED ANALOGS AS SIRTUIN MODULATORS
C 07D 405/14	EP 2318396*	A CRYSTALLINE FORM OF POSACONAZOLE
C 07D 405/14	EP 2321301*	NEW HETEROCYCLIC CARBOXAMIDES FOR USE AS THROMBIN INHIBITORS
C 07D 407/04	EP 2009153496	PPAR AGONIST COMPOUNDS AND PREPARATION AND USES THEREOF FOR TREATING DIABETES AND/OR DYSLIPIDEMIA
C 07D 407/04	EP 2118067*	NICOTINIC ACETYLCHOLINE RECEPTOR MODULATORS
C 07D 407/04	EP 2310371*	PPAR AGONIST COMPOUNDS AND PREPARATION AND USES THEREOF FOR TREATING DIABETES AND/OR DYSLIPIDEMIA
C 07D 407/04	EP 2316832	Cyclopamine analogues and methods of use thereof
C 07D 407/04	EP 2316833	Process for the preparation of Cyclopamine analogue compounds
C 07D 407/04	EP 2321278*	PYRIDINYL MODULATORS OF y-SECRETASE
C 07D 407/06	EP 2116542	SOLID OF MACROLIDE COMPOUND, METHOD FOR PRODUCTION THEREOF, AND PHARMACEUTICAL COMPOSITION COMPRISING THE SAME
C 07D 407/08	EP 2315751*	ALKYNYL ALCOHOLS AS KINASE INHIBITORS
C 07D 407/10	EP 2297131*	DI-SUBSTITUTED PHENYL COMPOUNDS AS PHOSPHODIESTERASE 10 INHIBITORS

(51)	Број објаве европске пријаве патента	(51)
C 07D 407/10	EP 2313387*	NOVEL HERBICIDES
C 07D 407/10	EP 2313388*	NOVEL HERBICIDES
C 07D 407/12	EP 2297114*	HETEROCYCLIC COMPOUND AND USE THEREOF
C 07D 407/12	EP 2307397*	6-SUBSTITUTED PHENOXYCHROMAN CARBOXYLIC ACID DERIVATIVES
C 07D 407/14	EP 2118067*	NICOTINIC ACETYLCHOLINE RECEPTOR MODULATORS
C 07D 407/14	EP 2307401*	ANTINEOPLASTIC DERIVATIVES OF 4-OXO-1,4-DIHYDRO-QUINOLINE, PREPARATION THEREOF, AND THERAPEUTIC USE THEREOF
C 07D 407/14	EP 2318363*	HETEROCYCLIC DERIVATIVES AS IAP BINDING COMPOUNDS
C 07D 409/04	EP 2118067*	NICOTINIC ACETYLCHOLINE RECEPTOR MODULATORS
C 07D 409/04	EP 2313376*	SUBSTITUTED 1-BENZYL-CINNOLIN-4(1H)-ONE DERIVATIVES, PREPARATION THEREOF, AND THERAPEUTIC USE THEREOF
C 07D 409/04	EP 2313391*	ISOQUINOLINONE DERIVATIVES AS NK3 ANTAGONISTS
C 07D 409/04	EP 2313399*	THIOPHENE OR THIAZOLE DERIVATIVES AND THEIR USE AS PI3K INHIBITORS
C 07D 409/04	EP 2321278*	PYRIDINYL MODULATORS OF y-SECRETASE
C 07D 409/06	EP 2297114*	HETEROCYCLIC COMPOUND AND USE THEREOF
C 07D 409/06	EP 2300423*	SUBSTITUTED 7-SULFANYLMETHYL, 7-SULFINYLMETHYL AND 7-SULFONYLMETHYL INDOLES AND USE THEREOF
C 07D 409/06	EP 2313370*	5-HETEROCYCLYLALKYL-3-HYDROXY-2-PHENYLCYCLOPENT-2-ENONES AS HERBICIDES
C 07D 409/10	EP 2313387*	NOVEL HERBICIDES
C 07D 409/10	EP 2313388*	NOVEL HERBICIDES
C 07D 409/12	EP 2300428*	AMINOPYRIDINE DERIVATIVES
C 07D 409/12	EP 2313374*	6-SUBSTITUTED ISOQUINOLINES AND ISOQUINOLINONES
C 07D 409/12	EP 2313392*	AZETIDINE POLYSUBSTITUTED COMPOUNDS, PREPARATION THEREOF, AND THERAPEUTIC APPLICATION THEREOF
C 07D 409/14	EP 2114920*	SUBSTITUTED ISOQUINOLINE AND ISOQUINOLINONE DERIVATIVES
C 07D 409/14	EP 2297114*	HETEROCYCLIC COMPOUND AND USE THEREOF
C 07D 409/14	EP 2300428*	AMINOPYRIDINE DERIVATIVES
C 07D 409/14	EP 2313399*	THIOPHENE OR THIAZOLE DERIVATIVES AND THEIR USE AS PI3K INHIBITORS
C 07D 409/14	EP 2318392*	PYRIMIDINE DERIVATIVES AS KINASE INHIBITORS
C 07D 413/02	EP 2318401*	AZAINDOLE INHIBITORS OF IAP
C 07D 413/04	EP 2099759*	ANTIBACTERIAL QUINOLINE DERIVATIVES
C 07D 413/04	EP 2298764	4-Oxadiazolyl-piperidine compounds and use thereof
C 07D 413/04	EP 2298765	4-Oxadiazolyl-piperidine compounds and use thereof
C 07D 413/04	EP 2313391*	ISOQUINOLINONE DERIVATIVES AS NK3 ANTAGONISTS
C 07D 413/04	EP 2318401*	AZAINDOLE INHIBITORS OF IAP
C 07D 413/06	EP 2297114*	HETEROCYCLIC COMPOUND AND USE THEREOF
C 07D 413/06	EP 2313370*	5-HETEROCYCLYLALKYL-3-HYDROXY-2-PHENYLCYCLOPENT-2-ENONES AS HERBICIDES
C 07D 413/10	EP 2297131*	DI-SUBSTITUTED PHENYL COMPOUNDS AS PHOSPHODIESTERASE 10 INHIBITORS
C 07D 413/10	EP 2300461*	CYCLIC INHIBITORS OF 11BETA-HYDROXYSTEROID DEHYDROGENASE 1
C 07D 413/10	EP 2303872*	ISOXAZOLE DERIVATIVES AND THEIR USE AS METABOTROPIC GLUTAMATE RECEPTOR POTENTIATORS
C 07D 413/12	EP 2118067*	NICOTINIC ACETYLCHOLINE RECEPTOR MODULATORS
C 07D 413/12	EP 2134680*	INHIBITORS OF HISTONE DEACETYLASE
C 07D 413/12	EP 2300428*	AMINOPYRIDINE DERIVATIVES
C 07D 413/12	EP 2303850*	NOVEL POTASSIUM CHANNEL BLOCKERS AND USES THEREOF

(51)	Број објаве европске пријаве патента	(51)
C 07D 413/12	EP 2303873*	BENZOXAZINONE DERIVATIVES ACTING AS BETA2-ADRENORECEPTOR AGONIST FOR THE TREATMENT OF RESPIRATORY DISORDERS
C 07D 413/12	EP 2310359*	ORGANIC COMPOUNDS
C 07D 413/12	EP 2311807	Compounds and composition as protein kinase inhibitors
C 07D 413/12	EP 2313393*	AZETIDINE POLYSUBSTITUTED COMPOUNDS, PREPARATION THEREOF, AND THERAPEUTIC APPLICATION THEREOF
C 07D 413/12	EP 2315751*	ALKYNYL ALCOHOLS AS KINASE INHIBITORS
C 07D 413/12	EP 2315763*	BENZIMIDAZOLES AND RELATED ANALOGS AS SIRTUIN MODULATORS
C 07D 413/12	EP 2321287*	4,5-DIHYDRO-OXAZOL-2-YL DERIVATIVES
C 07D 413/12	EP 2321301*	NEW HETEROCYCLIC CARBOXAMIDES FOR USE AS THROMBIN INHIBITORS
C 07D 413/14	EP 2221304	Method for synthesizing intermediate compound for synthesizing a pharmaceutical agent
C 07D 413/14	EP 2221305	Method for synthesizing intermediate compound for synthesizing a pharmaceutical agent
C 07D 413/14	EP 2297114*	HETEROCYCLIC COMPOUND AND USE THEREOF
C 07D 413/14	EP 2297133*	1, 2 DISUBSTITUTED HETEROCYCLIC COMPOUNDS
C 07D 413/14	EP 2297142*	NOVEL SUBSTITUTED PYRIDIN-2-ONES AND PYRIDAZIN-3-ONES
C 07D 413/14	EP 2298764	4-Oxadiazolyl-piperidine compounds and use thereof
C 07D 413/14	EP 2298765	4-Oxadiazolyl-piperidine compounds and use thereof
C 07D 413/14	EP 2300461*	CYCLIC INHIBITORS OF 11BETA-HYDROXYSTEROID DEHYDROGENASE 1
C 07D 413/14	EP 2300462*	MACROCYCLIC UREA AND SULFAMIDE DERIVATIVES AS INHIBITORS OF TAFIA
C 07D 413/14	EP 2303861*	PYRIDINE COMPOUNDS
C 07D 413/14	EP 2303863*	5- AND 6-MEMBERED HETEROCYCLIC COMPOUNDS
C 07D 413/14	EP 2308869	AZOLE COMPOUND
C 07D 413/14	EP 2310385*	SOLID PHARMACEUTICAL COMPOSITION
C 07D 413/14	EP 2313402*	HETEROCYCLIC UREA DERIVATIVES AND METHODS OF USE THEREOF
C 07D 413/14	EP 2315763*	BENZIMIDAZOLES AND RELATED ANALOGS AS SIRTUIN MODULATORS
C 07D 413/14	EP 2318389*	PYRIDAZINE DERIVATIVES AS SMO INHIBITORS
C 07D 413/14	EP 2318392*	PYRIMIDINE DERIVATIVES AS KINASE INHIBITORS
C 07D 417/02	EP 2318401*	AZAINDOLE INHIBITORS OF IAP
C 07D 417/04	EP 2099759*	ANTIBACTERIAL QUINOLINE DERIVATIVES
C 07D 417/04	EP 2313391*	ISOQUINOLINONE DERIVATIVES AS NK3 ANTAGONISTS
C 07D 417/04	EP 2313399*	THIOPHENE OR THIAZOLE DERIVATIVES AND THEIR USE AS PI3K INHIBITORS
C 07D 417/04	EP 2318401*	AZAINDOLE INHIBITORS OF IAP
C 07D 417/06	EP 2297114*	HETEROCYCLIC COMPOUND AND USE THEREOF
C 07D 417/06	EP 2303874*	SULFONAMIDE COMPOUNDS
C 07D 417/10	EP 2297131*	DI-SUBSTITUTED PHENYL COMPOUNDS AS PHOSPHODIESTERASE 10 INHIBITORS
C 07D 417/10	EP 2305672	SULFUR-CONTAINING HETEROCYCLIC DERIVATIVE HAVING ß-SECRETASE-INHIBITING ACTIVITY
C 07D 417/10	EP 2313387*	NOVEL HERBICIDES
C 07D 417/10	EP 2313388*	NOVEL HERBICIDES
C 07D 417/12	EP 2297114*	HETEROCYCLIC COMPOUND AND USE THEREOF
C 07D 417/12	EP 2300428*	AMINOPYRIDINE DERIVATIVES
C 07D 417/12	EP 2305672	SULFUR-CONTAINING HETEROCYCLIC DERIVATIVE HAVING ß-SECRETASE-INHIBITING ACTIVITY
C 07D 417/12	EP 2311807	Compounds and composition as protein kinase inhibitors
C 07D 417/12	EP 2313374*	6-SUBSTITUTED ISOQUINOLINES AND ISOQUINOLINONES

(51)	Број објаве европске пријаве патента	(51)
C 07D 417/12	EP 2313393*	AZETIDINE POLYSUBSTITUTED COMPOUNDS, PREPARATION THEREOF, AND THERAPEUTIC APPLICATION THEREOF
C 07D 417/12	EP 2315751*	ALKYNYL ALCOHOLS AS KINASE INHIBITORS
C 07D 417/12	EP 2315763*	BENZIMIDAZOLES AND RELATED ANALOGS AS SIRTUIN MODULATORS
C 07D 417/14	EP 2297133*	1, 2 DISUBSTITUTED HETEROCYCLIC COMPOUNDS
C 07D 417/14	EP 2297142*	NOVEL SUBSTITUTED PYRIDIN-2-ONES AND PYRIDAZIN-3-ONES
C 07D 417/14	EP 2300463*	HETEROCYCLIC UREA DERIVATIVES FOR THE TREATMENT OF BACTERIAL INFECTIONS
C 07D 417/14	EP 2303874*	SULFONAMIDE COMPOUNDS
C 07D 417/14	EP 2305672	SULFUR-CONTAINING HETEROCYCLIC DERIVATIVE HAVING ß-SECRETASE-INHIBITING ACTIVITY
C 07D 417/14	EP 2308509	INHIBITOR OF ANALGESIC TOLERANCE
C 07D 417/14	EP 2308869	AZOLE COMPOUND
C 07D 417/14	EP 2315763*	BENZIMIDAZOLES AND RELATED ANALOGS AS SIRTUIN MODULATORS
C 07D 451/02	EP 2311807	Compounds and composition as protein kinase inhibitors
C 07D 453/02	EP 2300464*	QUINUCLIDINE DERIVATIVES AS MUSCARINIC M3 RECEPTOR ANTAGONISTS
C 07D 453/02	EP 2310387*	A PROCESS FOR THE PREPARATION OF SOLIFENACIN SALTS AND THEIR INCLUSION INTO PHARMACEUTICAL DOSAGE FORMS
C 07D 453/02	EP 2311807	Compounds and composition as protein kinase inhibitors
C 07D 453/02	EP 2313404*	QUINUCLIDINE CARBONATE DERIVATIVES AND MEDICINAL COMPOSITION THEREOF
C 07D 471/04	EP 2121683*	2-PIPERAZIN-1-YL-3H-IMIDAZO[4,5-B]PYRIDINE DERIVATIVES
C 07D 471/04	EP 2293793*	2,5-DISUBSTITUTED IMIDAZO[4,5-C]PYRIDINES FOR TREATING MUSCULAR DYSTROPHY
C 07D 471/04	EP 2294068*	1,3-DIHYDRO-2H-PYRROLO[3,2-B]PYRIDIN-2-ONE DERIVATIVES, PREPARATION THEREOF AND THERAPEUTIC USES THEREOF
C 07D 471/04	EP 2297114*	HETEROCYCLIC COMPOUND AND USE THEREOF
C 07D 471/04	EP 2297144*	IMIDAZOPYRIDINE AND RELATED ANALOGS AS SIRTUIN MODULATORS
C 07D 471/04	EP 2300422*	AZETIDINES AND CYCLOBUTANES AS HISTAMINE H3 RECEPTOR ANTAGONISTS
C 07D 471/04	EP 2300440*	3,4-DIHYDROPYRIMIDINE TRPA1 ANTAGONISTS
C 07D 471/04	EP 2300465*	IMIDAZOPYRIDINE DERIVATIVES AS INHIBITORS OF RECEPTOR TYROSINE KINASES
C 07D 471/04	EP 2300469*	FUSED NITROGEN CONTAINING HETEROCYCLES AND COMPOSITIONS THEREOF AS KINASE INHIBITORS
C 07D 471/04	EP 2300472*	GLUCOCORTICOID MIMETICS, METHODS OF MAKING THEM, PHARMACEUTICAL COMPOSITIONS, AND USES THEREOF
C 07D 471/04	EP 2303875*	COMPOSITIONS WITH AND PROCESS FOR METHYLMORPHOLIN-SUBSITUTED PYRIDO[2,3-D]PYRIMIDINES
C 07D 471/04	EP 2303880*	NOVEL TRICYCLIC DERIVATIVES, PROCESS FOR THE PREPARATION THEREOF AND PHARMACEUTICAL COMPOSITIONS CONTAINING SAME
C 07D 471/04	EP 2303882*	AZACARBOLINE DERIVATIVES, PREPARATION METHOD THEREOF AND THERAPEUTIC USE OF SAME
C 07D 471/04	EP 2307400*	INHIBITORS OF PI3 KINASE
C 07D 471/04	EP 2307401*	ANTINEOPLASTIC DERIVATIVES OF 4-OXO-1,4-DIHYDRO-QUINOLINE, PREPARATION THEREOF, AND THERAPEUTIC USE THEREOF
C 07D 471/04	EP 2307409*	PYRROLOPYRIDINES AS KINASE INHIBITORS

(51)	Број објаве европске пријаве патента	(51)
C 07D 471/04	EP 2308870	2-oxo-1-pyrrolidine deriatives, processes for preparing them and their uses
C 07D 471/04	EP 2310366*	NOVEL TRIAZOLO(4,3-A)PYRIDINE DERIVATIVES, PROCESS FOR THE PREPARATION THEREOF, USE THEREOF AS MEDICAMENTS, PHARMACEUTICAL COMPOSITIONS AND NOVEL USE, IN PARTICULAR AS MET INHIBITORS
C 07D 471/04	EP 2310373*	BICYCLIC HETEROCYCLES AS MEK KINASE INHIBITORS
C 07D 471/04	EP 2310389*	HETEROCYCLES AS PROTEIN KINASE INHIBITORS
C 07D 471/04	EP 2311807	Compounds and composition as protein kinase inhibitors
C 07D 471/04	EP 2313407*	cMET INHIBITORS
C 07D 471/04	EP 2313412*	NOVEL DERIVATIVES OF PYRROLOINDOLE INHIBITORS OF HSP90, COMPOSITIONS CONTAINING SAME, AND USE THEREOF
C 07D 471/04	EP 2315751*	ALKYNYL ALCOHOLS AS KINASE INHIBITORS
C 07D 471/04	EP 2315763*	BENZIMIDAZOLES AND RELATED ANALOGS AS SIRTUIN MODULATORS
C 07D 471/04	EP 2318382*	NOVEL IMIDAZO[1,2-A]PYRIDINE DERIVATIVES, METHOD FOR THE PREPARATION THEREOF, USE THEREOF AS MEDICAMENTS, PHARMACEUTICAL COMPOSITIONS AND NOVEL USE IN PARTICULAR AS MET INHIBITORS
C 07D 471/04	EP 2318389*	PYRIDAZINE DERIVATIVES AS SMO INHIBITORS
C 07D 471/04	EP 2320895*	CDK MODULATORS
C 07D 471/04	EP 2321312*	PROCESS FOR THE PREPARATION OF PALIPERIDONE
C 07D 471/04	EP 2321313*	SUBSTITUTED PYRIMIDO [2, 1-A]ISOQUINOLIN-4-ONE DERIVATIVES
C 07D 471/04	EP 2321314*	SUBSTITUTED PYRIMIDONE DERIVATIVES
C 07D 471/04	EP 2321315*	SUBSTITUTED ALKYL PYRIMIDIN-4-ONE DERIVATIVES
C 07D 471/04	EP 2321316*	SUBSTITUTED PYRIMIDIN-4-ONE DERIVATIVES
C 07D 471/08	EP 2297147*	AZABICYCLIC COMPOUNDS, PREPARATION THEREOF AND USE OF SAME AS DRUGS, ESPECIALLY BETA-LACTAMASE INHIBITORS
C 07D 471/08	EP 2300473*	FUMARATE SALT OF 4-BROMOPHENYL 1,4-DIAZABICYCLO[3.2.2]NONANE-4-CARBOXYLATE, CRYSTALLINE FORMS THEREOF, PREPARATION THEREOF AND THERAPEUTIC USE THEREOF
C 07D 471/08	EP 2315763*	BENZIMIDAZOLES AND RELATED ANALOGS AS SIRTUIN MODULATORS
C 07D 471/10	EP 2300474*	SPIRO (PIPERIDINE-4, 2 ' -PYRROLIDINE) -1- (3, 5-TRIFLUOROMETHYL PHENYL) METHYLCARBOXAMIDES AS NK1 TACHIKYNIN RECEPTOR ANTAGONISTS
C 07D 471/10	EP 2315751*	ALKYNYL ALCOHOLS AS KINASE INHIBITORS
C 07D 471/10	EP 2318363*	HETEROCYCLIC DERIVATIVES AS IAP BINDING COMPOUNDS
C 07D 471/14	EP 2300475*	DIAZACARBAZOLES AND METHODS OF USE
C 07D 471/14	EP 2303880*	NOVEL TRICYCLIC DERIVATIVES, PROCESS FOR THE PREPARATION THEREOF AND PHARMACEUTICAL COMPOSITIONS CONTAINING SAME
C 07D 471/14	EP 2303882*	AZACARBOLINE DERIVATIVES, PREPARATION METHOD THEREOF AND THERAPEUTIC USE OF SAME
C 07D 471/16	EP 2300476*	TRICYCLIC NITROGEN CONTAINING COMPOUNDS AND THEIR USE AS ANTIBACTERIALS
C 07D 473/00	EP 2112151	Haloaryl substituted aminopurines, compositions thereof, and methods of treatment therewith
C 07D 473/00	EP 2289893	Haloaryl substituted aminopurines, compositions thereof, and methods of treatment therewith
C 07D 473/00	EP 2308870	2-oxo-1-pyrrolidine deriatives, processes for preparing them and their uses
C 07D 473/04	EP 2118067*	NICOTINIC ACETYLCHOLINE RECEPTOR MODULATORS
C 07D 473/06	EP 2301937	Prodrugs of A2b adenosine receptor antagonists

(51)	Број објаве европске пријаве патента	(51)
C 07D 473/06	EP 2308509	INHIBITOR OF ANALGESIC TOLERANCE
C 07D 473/16	EP 2311807	Compounds and composition as protein kinase inhibitors
C 07D 473/16	EP 2320905*	NOVEL ADENINE DERIVATIVES
C 07D 473/18	EP 2320905*	NOVEL ADENINE DERIVATIVES
C 07D 473/32	EP 2112151	Haloaryl substituted aminopurines, compositions thereof, and methods of treatment therewith
C 07D 473/32	EP 2289893	Haloaryl substituted aminopurines, compositions thereof, and methods of treatment therewith
C 07D 473/34	EP 2303884*	ADENINE RECEPTOR LIGANDS
C 07D 473/34	EP 2308509	INHIBITOR OF ANALGESIC TOLERANCE
C 07D 487/02	EP 2310392*	TRICYCLIC ANTAGONISTS OF PROSTAGLANDIN D2 RECEPTORS
C 07D 487/02	EP 2318401*	AZAINDOLE INHIBITORS OF IAP
C 07D 487/02	EP 2318410*	NEW SMALL-MOLECULE PDE-10 INHIBITORS
C 07D 487/04	EP 2069348*	NOVEL PYRAZOLOPYRIMIDINES AS CYCLIN DEPENDENT KINASE INHIBITORS
C 07D 487/04	EP 2069349*	PYRAZOLOPYRIMIDINES AS CYCLIN DEPENDENT KINASE INHIBITORS
C 07D 487/04	EP 2069350*	NOVEL PYRAZOLOPYRIMIDINES AS CYCLIN DEPENDENT KINASE INHIBITORS
C 07D 487/04	EP 2084162*	BICYCLIC TRIAZOLES AS PROTEIN KINASE MODULATORS
C 07D 487/04	EP 2118067*	NICOTINIC ACETYLCHOLINE RECEPTOR MODULATORS
C 07D 487/04	EP 2297114*	HETEROCYCLIC COMPOUND AND USE THEREOF
C 07D 487/04	EP 2297144*	IMIDAZOPYRIDINE AND RELATED ANALOGS AS SIRTUIN MODULATORS
C 07D 487/04	EP 2297152*	ANHYDROUS CRYSTAL FORM OF ORVEPITANT MALEATE
C 07D 487/04	EP 2297159*	SUBSTITUTED QUINAZOLINES
C 07D 487/04	EP 2300422*	AZETIDINES AND CYCLOBUTANES AS HISTAMINE H3 RECEPTOR ANTAGONISTS
C 07D 487/04	EP 2300455*	SALTS OF 2-FLUORO-N-METHYL-4-[7-(QUINOLIN-6-YL-METHYL) - IMIDAZO [1, 2-B] [1, 2, 4] TRIAZIN-2-YL] BENZAMIDE AND PROCESSES RELATED TO PREPARING THE SAME
C 07D 487/04	EP 2300469*	FUSED NITROGEN CONTAINING HETEROCYCLES AND COMPOSITIONS THEREOF AS KINASE INHIBITORS
C 07D 487/04	EP 2300478*	1-HETEROCYCLYL-1,5-DIHYDRO-PYRAZOLO[3,4-D]PYRIMIDIN-4-ONE DERIVATIVES AND THEIR USE AS PDE9A MODULATORS
C 07D 487/04	EP 2303880*	NOVEL TRICYCLIC DERIVATIVES, PROCESS FOR THE PREPARATION THEREOF AND PHARMACEUTICAL COMPOSITIONS CONTAINING SAME
C 07D 487/04	EP 2306985*	CONTROLLED RELEASE COMPOSITIONS OF AGENTS THAT REDUCE CIRCULATING LEVELS OF PLATELETS AND METHODS THEREFOR
C 07D 487/04	EP 2307416*	SUBSTITUTED TRICYCLIC DERIVATIVES AGAINST NEURODEGENERATIVE DISEASES
C 07D 487/04	EP 2308509	INHIBITOR OF ANALGESIC TOLERANCE
C 07D 487/04	EP 2308870	2-oxo-1-pyrrolidine deriatives, processes for preparing them and their uses
C 07D 487/04	EP 2310392*	TRICYCLIC ANTAGONISTS OF PROSTAGLANDIN D2 RECEPTORS
C 07D 487/04	EP 2311807	Compounds and composition as protein kinase inhibitors
C 07D 487/04	EP 2313407*	cMET INHIBITORS
C 07D 487/04	EP 2313412*	NOVEL DERIVATIVES OF PYRROLOINDOLE INHIBITORS OF HSP90, COMPOSITIONS CONTAINING SAME, AND USE THEREOF
C 07D 487/04	EP 2313414*	KINASE INHIBITORS AND METHODS OF USE
C 07D 487/04	EP 2315751*	ALKYNYL ALCOHOLS AS KINASE INHIBITORS
C 07D 487/04	EP 2318401*	AZAINDOLE INHIBITORS OF IAP

(51)	Број објаве европске пријаве патента	(51)
C 07D 487/04	EP 2320895*	CDK MODULATORS
C 07D 487/04	EP 2321295*	4-(PYRIDIN-4-YL)-1H-[1,3,5]TRIAZIN-2-ONE DERIVATIVES AS GSK3-BETA INHIBITORS FOR THE TREATMENT OF NEURODEGENERATIVE DISEASES
C 07D 487/04	EP 2321321*	TRIAZOLO [4, 5-D]PYRAMIDINE DERIVATIVES AND THEIR USE AS PURINE RECEPTOR ANTAGONISTS
C 07D 487/06	EP 2315751*	ALKYNYL ALCOHOLS AS KINASE INHIBITORS
C 07D 487/08	EP 2297114*	HETEROCYCLIC COMPOUND AND USE THEREOF
C 07D 487/08	EP 2311807	Compounds and composition as protein kinase inhibitors
C 07D 487/10	EP 2315751*	ALKYNYL ALCOHOLS AS KINASE INHIBITORS
C 07D 487/10	EP 2320895*	CDK MODULATORS
C 07D 487/14	EP 2308509	INHIBITOR OF ANALGESIC TOLERANCE
C 07D 487/16	EP 2315751*	ALKYNYL ALCOHOLS AS KINASE INHIBITORS
C 07D 489/00	EP 2305683	Pharmaceutical dosage form comprising oxycodone hydrochloride having less than 25 ppm 14-hydroxycodeinone
C 07D 489/08	EP 2300479*	NALMEFENE HYDROCHLORIDE DIHYDRATE
C 07D 489/08	EP 2305683	Pharmaceutical dosage form comprising oxycodone hydrochloride having less than 25 ppm 14-hydroxycodeinone
C 07D 489/08	EP 2307420*	NALMEFENE DI-ESTER PRODRUGS
C 07D 489/08	EP 2311839	Oxycodone hydrochloride composition having less than 25 ppm 14-hydroxycodeinone
C 07D 489/08	EP 2314589	Process for preparing oxycodone hydrochloride having less than 25ppm 14-hydroxycodeinone
C 07D 489/08	EP 2316837	Process for preparing oxycodone hydrochloride having less than 25ppm 14-hydroxycodeinone
C 07D 489/08	EP 2319846	Process for preparing oxycodone hydrochloride having less than 25ppm 14-hydroxycodeinone
C 07D 491/04	EP 2313416*	SYNTHETIC INTERMEDIATES AND PROCESSES
C 07D 491/10	EP 2315751*	ALKYNYL ALCOHOLS AS KINASE INHIBITORS
C 07D 491/107	EP 2320895*	CDK MODULATORS
C 07D 491/18	EP 2313370*	5-HETEROCYCLYLALKYL-3-HYDROXY-2-PHENYLCYCLOPENT-2-ENONES AS HERBICIDES
C 07D 491/22	EP 2189461	Crystalline irinotecan hydrochloride and methods for the preparation thereof
C 07D 493/08	EP 2303845*	BI-AND POLYCYCLIC SUBSTITUTED ISOQUINOLINE AND ISOQUINOLINE DERIVATIVES AS RHO KINASE INHIBITORS
C 07D 493/08	EP 2313387*	NOVEL HERBICIDES
C 07D 493/08	EP 2313388*	NOVEL HERBICIDES
C 07D 495/04	EP 2297114*	HETEROCYCLIC COMPOUND AND USE THEREOF
C 07D 495/04	EP 2300480*	PROCESS FOR THE PREPARATION OF CLOPIDOGREL HYDROGEN SULFATE CRYSTALLINE FORM I
C 07D 495/04	EP 2308509	INHIBITOR OF ANALGESIC TOLERANCE
C 07D 495/04	EP 2315755*	SYNTHESIS OF DIHYDROTHIENO[3,2-d]PYRIMIDINE DIOLS AND SIMILAR PYRIMIDINE DIOLS
C 07D 495/08	EP 2303845*	BI-AND POLYCYCLIC SUBSTITUTED ISOQUINOLINE AND ISOQUINOLINE DERIVATIVES AS RHO KINASE INHIBITORS
C 07D 495/10	EP 2315751*	ALKYNYL ALCOHOLS AS KINASE INHIBITORS
C 07D 498/04	EP 2303851*	NOVEL PHENOLIC AND CATECHOLIC AMINES AND PRODRUGS THEREOF
C 07D 498/04	EP 2318415*	OXAZOLOPYRIMIDINES AS EDG-1 RECEPTOR AGONISTS
C 07D 498/04	EP 2320895*	CDK MODULATORS
C 07D 498/04	EP 2321324*	CRYSTALLINE FORMS OF A PYRIDINE DERIVATIVE
C 07D 498/06	EP 2300463*	HETEROCYCLIC UREA DERIVATIVES FOR THE TREATMENT OF BACTERIAL INFECTIONS
C 07D 498/08	EP 2300483*	TRIAZINE COMPOUNDS AS P13 KINASE AND MTOR INHIBITORS
C 07D 498/14	EP 2320895*	CDK MODULATORS
C 07D 498/18	EP 2321325*	ANTITUMORAL MACROLIDES

(51)	Број објаве европске пријаве патента	(51)
C 07D 498/20	EP 2300474*	SPIRO (PIPERIDINE-4, 2 ' -PYRROLIDINE) -1- (3, 5-TRIFLUOROMETHYL PHENYL) METHYLCARBOXAMIDES AS NK1 TACHIKYNIN RECEPTOR ANTAGONISTS
C 07D 498/22	EP 2321325*	ANTITUMORAL MACROLIDES
C 07D 513/04	EP 2300465*	IMIDAZOPYRIDINE DERIVATIVES AS INHIBITORS OF RECEPTOR TYROSINE KINASES
C 07D 513/04	EP 2308870	2-oxo-1-pyrrolidine deriatives, processes for preparing them and their uses
C 07D 513/04	EP 2315763*	BENZIMIDAZOLES AND RELATED ANALOGS AS SIRTUIN MODULATORS
C 07D 513/10	EP 2300484*	NOVEL CLASS OF SPIRO PIPERIDINES FOR THE TREATMENT OF NEURODEGENERATIVE DISEASES
C 07D 513/18	EP 2310396*	MACROCYCLIC INDOLE DERIVATIVES USEFUL AS HEPATITIS C VIRUS INHIBITORS
C 07D 515/18	EP 2310396*	MACROCYCLIC INDOLE DERIVATIVES USEFUL AS HEPATITIS C VIRUS INHIBITORS
C 07D 517/04	EP 2297167*	SELENOPHENE AND SELENAZOLE CARBOXYLIC ACID DERIVATIVES
C 07D 519/00	EP 2307416*	SUBSTITUTED TRICYCLIC DERIVATIVES AGAINST NEURODEGENERATIVE DISEASES
C 07D 519/00	EP 2307426*	FUSED PYRAZINE COMPOUNDS USEFUL FOR THE TREATMENT OF DEGENERATIVE AND INFLAMMATORY DISEASES
C 07D 519/00	EP 2313407*	cMET INHIBITORS
C 07D 519/00	EP 2318415*	OXAZOLOPYRIMIDINES AS EDG-1 RECEPTOR AGONISTS
C 07F 3/02	EP 2129679*	A METHOD FOR PREPARATION OF SUBSTITUTED ADAMANTYLARYLMAGNESIUM HALIDES
C 07F 5/02	EP 2318419*	BORONATE ESTER COMPOUNDS AND PHARMACEUTICAL COMPOSITIONS THEREOF
C 07F 5/04	EP 2318419*	BORONATE ESTER COMPOUNDS AND PHARMACEUTICAL COMPOSITIONS THEREOF
C 07F 5/06	EP 2318419*	BORONATE ESTER COMPOUNDS AND PHARMACEUTICAL COMPOSITIONS THEREOF
C 07F 7/18	EP 2064176*	PHENYLOXYANILINE DERIVATIVES
C 07F 7/22	EP 2303897*	HIGH-VALENT PALLADIUM FLUORIDE COMPLEXES AND USES THEREOF
C 07F 9/02	EP 2069370*	MICROORGANISM KILLING COMPOUNDS
C 07H 1/00	EP 2310418*	METHOD OF EXTRACTION OF FURFURAL AND GLUCOSE FROM BIOMASS USING ONE OR MORE SUPERCRITICAL FLUIDS
C 07H 3/06	EP 2315747*	METHODS AND COMPOSITIONS RELATING TO SYNTHETIC BETA-1,6 GLUCOSAMINE OLIGOSACCHARIDES
C 07H 7/04	EP 2308886	CRYSTAL OF SPIROKETAL DERIVATIVE, AND PROCESS FOR PRODUCTION THEREOF
C 07H 19/01	EP 2308886	CRYSTAL OF SPIROKETAL DERIVATIVE, AND PROCESS FOR PRODUCTION THEREOF
C 07H 23/00	EP 2308886	CRYSTAL OF SPIROKETAL DERIVATIVE, AND PROCESS FOR PRODUCTION THEREOF
C 07J 41/00	EP 2121724*	NOVEL METHOD FOR THE DIASTEREOSELECTIVE PRODUCTION OF A CHIRAL PRIMARY AMINE ON A STEROID
C 07J 41/00	EP 2318427*	GLUCOCORTICOIDS ATTACHED TO NITRATE ESTERS VIA AN AROMATIC LINKER IN POSITION 21 AND THEIR USE IN OPHTHALMOLOGY
C 07J 53/00	EP 2297177*	C-RING-SUBSTITUTED PREGN-4-ENE-21,17-CARBOLACTONE, AND PHARMACEUTICAL PREPARATIONS COMPRISING THE LATTER
C 07J 71/00	EP 2307439*	ESTRATRIENE DERIVATIVES COMPRISING HETEROCYCLIC BIOISOSTERES FOR THE PHENOLIC A-RING

(51)	Број објаве европске пријаве патента	(51)
C 07J 71/00	EP 2318427*	GLUCOCORTICOIDS ATTACHED TO NITRATE ESTERS VIA AN AROMATIC LINKER IN POSITION 21 AND THEIR USE IN OPHTHALMOLOGY
C 07K 1/00	EP 2320746*	SOLUBLE CANOLA PROTEIN ISOLATE PRODUCTION FROM PROTEIN MICELLAR MASS
C 07K 1/113	EP 2307446*	NONIMMUNOSUPPRESSIVE CYCLOSPORINE ANALOGUE MOLECULES
C 07K 1/14	EP 2309873*	SOLUBLE CANOLA PROTEIN ISOLATE PRODUCTION
C 07K 1/14	EP 2320747*	PREPARATION OF CANOLA PROTEIN ISOLATE FROM CANOLA OIL SEEDS ("BLENDERTEIN")
C 07K 1/18	EP 2321337*	METHODS FOR REMOVING A CONTAMINANT USING INDIGENOUS PROTEIN DISPLACEMENT ION EXCHANGE MEMBRANE CHROMATOGRAPHY
C 07K 1/28	EP 2303919*	NOVEL CANOLA PROTEIN ISOLATE
C 07K 1/30	EP 2303919*	NOVEL CANOLA PROTEIN ISOLATE
C 07K 1/34	EP 2303919*	NOVEL CANOLA PROTEIN ISOLATE
C 07K 1/34	EP 2320746*	SOLUBLE CANOLA PROTEIN ISOLATE PRODUCTION FROM PROTEIN MICELLAR MASS
C 07K 1/34	EP 2321337*	METHODS FOR REMOVING A CONTAMINANT USING INDIGENOUS PROTEIN DISPLACEMENT ION EXCHANGE MEMBRANE CHROMATOGRAPHY
C 07K 1/36	EP 2321337*	METHODS FOR REMOVING A CONTAMINANT USING INDIGENOUS PROTEIN DISPLACEMENT ION EXCHANGE MEMBRANE CHROMATOGRAPHY
C 07K 2/00	EP 2083842*	ANALOGS OF GHRELIN SUBSTITUTED AT THE N-TERMINAL
C 07K 4/12	EP 2230245	Peptides having pharmacological activity for treating disorders associated with altered cell migration, such as cancer
C 07K 5/08	EP 2310095*	MACROCYCLIC QUINOXALINE COMPOUNDS AS HCV NS3 PROTEASE INHIBITORS
C 07K 5/10	EP 2310095*	MACROCYCLIC QUINOXALINE COMPOUNDS AS HCV NS3 PROTEASE INHIBITORS
C 07K 5/12	EP 2310095*	MACROCYCLIC QUINOXALINE COMPOUNDS AS HCV NS3 PROTEASE INHIBITORS
C 07K 7/06	EP 2318428*	ANTICANCER COMPOUNDS
C 07K 7/08	EP 2101802*	INHIBITING COLLAGEN-INDUCED PLATELET AGGREGATION AND ACTIVATION WITH PEPTIDE VARIANTS
C 07K 7/08	EP 2300494*	ANTI-AMYLOID IMMUNOGENIC COMPOSITIONS, METHODS AND USES
C 07K 7/64	EP 2307446*	NONIMMUNOSUPPRESSIVE CYCLOSPORINE ANALOGUE MOLECULES
C 07K 14/015	EP 2297185*	PARVOVIRAL CAPSID WITH INCORPORATED GLY-ALA REPEAT REGION
C 07K 14/12	EP 2303322*	RECOMBINANT MODIFIED VACCINIA VIRUS MEASLES VACCINE
C 07K 14/195	EP 2310404*	TRANSCONJUGANTS OF LACTIC ACID BACTERIA
C 07K 14/255	EP 2300609*	NOVEL IMMUNOADJUVANT FLAGELLIN-BASED COMPOUNDS AND USE THEREOF
C 07K 14/31	EP 2315747*	METHODS AND COMPOSITIONS RELATING TO SYNTHETIC BETA-1,6 GLUCOSAMINE OLIGOSACCHARIDES
C 07K 14/315	EP 2298342	Peptides protective against s. pneumoniae and compositions, methods and uses relating thereto
C 07K 14/325	EP 2297189*	TOXIN GENES AND METHODS FOR THEIR USE
C 07K 14/325	EP 2297190*	AXMI-115, AXMI-113, AXMI-005, AXMI-163 AND AXMI-184: VIP3A INSECTICIDAL PROTEINS FROM BACILLUS THURINGIENSIS AND METHODS FOR THEIR USE
C 07K 14/35	EP 2315597*	NOVEL COMPOSITIONS AND METHODS
C 07K 14/35	EP 2315773*	NOVEL COMPOSITIONS AND METHODS

(51)	Број објаве европске пријаве патента	(51)
C 07K 14/35	EP 2315834*	THE TUBERCULOSIS RV2386C PROTEIN, COMPOSITIONS AND USES THEREOF
C 07K 14/415	EP 2297192*	PLANTS HAVING ENHANCED YIELD-RELATED TRAITS AND A METHOD FOR MAKING THE SAME BY OVEREXPRESSING A POLYNUCLEOTIDE ENCODING A TFL1-LIKE PROTEIN
C 07K 14/415	EP 2303919*	NOVEL CANOLA PROTEIN ISOLATE
C 07K 14/415	EP 2309873*	SOLUBLE CANOLA PROTEIN ISOLATE PRODUCTION
C 07K 14/415	EP 2320746*	SOLUBLE CANOLA PROTEIN ISOLATE PRODUCTION FROM PROTEIN MICELLAR MASS
C 07K 14/415	EP 2320747*	PREPARATION OF CANOLA PROTEIN ISOLATE FROM CANOLA OIL SEEDS ("BLENDERTEIN")
C 07K 14/46	EP 2318433*	ANALOGUES OF GLUCOSE-DEPENDENT INSULINOTROPIC POLYPEPTIDE (GIP) MODIFIED AT N-TERMINAL
C 07K 14/47	EP 2294197*	VARIANT HHIP1 PROTEIN AND METHODS AND USES THEREOF
C 07K 14/47	EP 2300494*	ANTI-AMYLOID IMMUNOGENIC COMPOSITIONS, METHODS AND USES
C 07K 14/47	EP 2313430*	MUTEINS OF HNGAL AND RELATED PROTEINS WITH AFFINITY FOR A GIVEN TARGET
C 07K 14/50	EP 2296690*	FGF21 MUTANTS AND USES THEREOF
C 07K 14/54	EP 2297334*	BIOMARKER FOR ASSESSING RESPONSE TO CHYMASE TREATMENT
C 07K 14/58	EP 2303922*	METHOD FOR THE IN VITRO DIAGNOSIS OF STROKE
C 07K 14/62	EP 2318433*	ANALOGUES OF GLUCOSE-DEPENDENT INSULINOTROPIC POLYPEPTIDE (GIP) MODIFIED AT N-TERMINAL
C 07K 14/64	EP 2129359*	CHIMERIC PEPTIDE ANTAGONIST FOR GPCR135 OR GPCR142
C 07K 14/705	EP 2101802*	INHIBITING COLLAGEN-INDUCED PLATELET AGGREGATION AND ACTIVATION WITH PEPTIDE VARIANTS
C 07K 14/705	EP 2297198*	FN14/TRAIL FUSION PROTEINS
C 07K 14/705	EP 2321345*	MULTI-SPECIFIC BINDING PROTEINS TARGETING B CELL DISORDERS
C 07K 14/715	EP 2057194*	ENGINEERED ANTI-IL-23R ANTIBODIES
C 07K 14/715	EP 2310410*	TNF- ANTAGONIST MULTI-TARGET BINDING PROTEINS
C 07K 14/715	EP 2310508*	TGF-B ANTAGONIST MULTI-TARGET BINDING PROTEINS
C 07K 14/755	EP 2300497*	A PROCESS OF PURIFYING COAGULATION FACTOR VIII
C 07K 14/775	EP 2319868	Immunotherapeutic treatment for inducing the regression of atherosclerotic plaques
C 07K 14/82	EP 2318435*	MODULATORS OF MYC, METHODS OF USING THE SAME, AND METHODS OF IDENTIFYING AGENTS THAT MODULATE MYC
C 07K 16/00	EP 2300498*	CONSTRUCTS AND LIBRARIES COMPRISING ANTIBODY SURROGATE KAPPA LIGHT CHAIN SEQUENCES
C 07K 16/08	EP 2303923*	HUMAN CYTOMEGALOVIRUS NEUTRALISING ANTIBODIES AND USE THEREOF
C 07K 16/10	EP 2294084*	MONOCLONAL ANTIBODIES HAVING HOMOSUBTYPE CROSS -NEUTRALIZATION PROPERTIES AGAINST INFLUENZA A VIRUSES SUBTYPE H1
C 07K 16/10	EP 2314620	Binding molecules capable of neutralizing rabies virus and uses thereof
C 07K 16/10	EP 2314621	Binding molecules capable of neutralizing rabies virus and uses thereof
C 07K 16/14	EP 2294179*	INDUCTION OF FLOCCULATION IN PHOTOSYNTHETIC ORGANISMS
C 07K 16/18	EP 2310032*	COMPOUNDS FOR TREATING SYMPTOMS ASSOCIATED WITH PARKINSON'S DISEASE
C 07K 16/18	EP 2310033*	COMPOUNDS FOR TREATING AMYLOIDOSES

(51)	Број објаве европске пријаве патента	(51)
C 07K 16/18	EP 2310034*	COMPOUNDS FOR TREATING BETA-AMYLOIDOSES
C 07K 16/18	EP 2318048*	STRUCTURAL VARIANTS OF ANTIBODIES FOR IMPROVED THERAPEUTIC CHARACTERISTICS
C 07K 16/18	EP 2319868	Immunotherapeutic treatment for inducing the regression of atherosclerotic plaques
C 07K 16/18	EP 2319869	ANTIBODY AGAINST OXIDIZED LDL/ß²GPI COMPLEX AND USE OF THE SAME
C 07K 16/18	EP 2321348*	METHOD OF PROMOTING NEUROGENESIS
C 07K 16/20	EP 2297208*	DUAL VARIABLE DOMAIN IMMUNOGLOBULINS AND USES THEREOF
C 07K 16/20	EP 2297209*	DUAL VARIABLE DOMAIN IMMUNOGLOBULINS AND USES THEREOF
C 07K 16/22	EP 2307456*	ANG-2 INHIBITION TO TREAT MULTIPLE SCLEROSIS
C 07K 16/24	EP 2236519	Human GM-CSF antigen binding proteins
C 07K 16/24	EP 2310410*	TNF- ANTAGONIST MULTI-TARGET BINDING PROTEINS
C 07K 16/24	EP 2310508*	TGF-B ANTAGONIST MULTI-TARGET BINDING PROTEINS
C 07K 16/24	EP 2313109*	IL6 IMMUNOTHERAPEUTICS
C 07K 16/26	EP 2294087*	ANTI-HEPCIDIN ANTIBODIES AND METHODS OF USE
C 07K 16/28	EP 2057194*	ENGINEERED ANTI-IL-23R ANTIBODIES
C 07K 16/28	EP 2081962*	NOVEL ANTI-NOTCH3 ANTIBODIES AND THEIR USE IN THE DETECTION AND DIAGNOSIS OF DISEASE
C 07K 16/28	EP 2137217*	METHODS FOR INHIBITING THE BINDING OF ENDOSIALIN TO LIGANDS
C 07K 16/28	EP 2297204*	ANTI-CD8 ANTIBODIES BLOCK PRIMING OF CYTOTOXIC EFFECTORS AND LEAD TO GENERATION OF REGULATORY CD8+T CELLS
C 07K 16/28	EP 2297206*	ANTI-CXCR4 ANTIBODIES
C 07K 16/28	EP 2300500*	ANTI-FLT3 ANTIBODIES
C 07K 16/28	EP 2301576	Therapeutic use of Anti-CS1 Antibodies
C 07K 16/28	EP 2307459*	NOTCH1 RECEPTOR BINDING AGENTS AND METHODS OF USE THEREOF
C 07K 16/28	EP 2310508*	TGF-B ANTAGONIST MULTI-TARGET BINDING PROTEINS
C 07K 16/28	EP 2313109*	IL6 IMMUNOTHERAPEUTICS
C 07K 16/28	EP 2315779*	COMPOSITIONS COMPRISING ANTIBODIES TO LINGO OR FRAGMENTS THEREOF
C 07K 16/28	EP 2318437*	METHOD FOR TREATING MULTIPLE SCLEROSIS PATIENTS WITH ANTI-IL2R ANTIBODIES
C 07K 16/28	EP 2318442*	TREATMENT OF AUTOIMMUNE AND INFLAMMATORY DISEASE
C 07K 16/28	EP 2321345*	MULTI-SPECIFIC BINDING PROTEINS TARGETING B CELL DISORDERS
C 07K 16/28	EP 2321352*	COMPOSITIONS MONOVALENT FOR CD28 BINDING AND METHODS OF USE
C 07K 16/32	EP 2318548*	METHODS AND SYSTEMS FOR PREDICTING RESPONSE OF CELLS TO A THERAPEUTIC AGENT
C 07K 16/42	EP 2132230*	APOPTOTIC ANTI-IGE ANTIBODIES BINDING THE MEMBRANE-BOUND IGE
C 07K 16/46	EP 2297208*	DUAL VARIABLE DOMAIN IMMUNOGLOBULINS AND USES THEREOF
C 07K 16/46	EP 2297209*	DUAL VARIABLE DOMAIN IMMUNOGLOBULINS AND USES THEREOF
C 07K 16/46	EP 2313109*	IL6 IMMUNOTHERAPEUTICS
C 07K 16/46	EP 2319869	ANTIBODY AGAINST OXIDIZED LDL/ß²GPI COMPLEX AND USE OF THE SAME
C 07K 19/00	EP 2318435*	MODULATORS OF MYC, METHODS OF USING THE SAME, AND METHODS OF IDENTIFYING AGENTS THAT MODULATE MYC
C 08B 1/00	EP 2310418*	METHOD OF EXTRACTION OF FURFURAL AND GLUCOSE FROM BIOMASS USING ONE OR MORE SUPERCRITICAL FLUIDS

(51)	Број објаве европске пријаве патента	(51)
C 08B 15/10	EP 2309059	Method of improving properties of cellulose-based fibrous sheet-formed materials
C 08B 37/00	EP 2315747*	METHODS AND COMPOSITIONS RELATING TO SYNTHETIC BETA-1,6 GLUCOSAMINE OLIGOSACCHARIDES
C 08F 4/00	EP 2311900	Star polymer and method for producing the same
C 08F 8/00	EP 2311900	Star polymer and method for producing the same
C 08F 289/00	EP 2311900	Star polymer and method for producing the same
C 08G 12/38	EP 2216363	Aqueous, modified melamine resin mixture, method for producing same and use of same to saturate absorbent carriers and compound material produced using the melamine resin material
C 08G 12/42	EP 2216363	Aqueous, modified melamine resin mixture, method for producing same and use of same to saturate absorbent carriers and compound material produced using the melamine resin material
C 08G 18/00	EP 2078047*	POLYURETHANE ADHESIVE
C 08G 18/28	EP 2112205	Stable dispersion of anorganic nanoparticles
C 08G 18/32	EP 2112205	Stable dispersion of anorganic nanoparticles
C 08G 18/40	EP 2078047*	POLYURETHANE ADHESIVE
C 08G 18/48	EP 2112205	Stable dispersion of anorganic nanoparticles
C 08G 18/71	EP 2112205	Stable dispersion of anorganic nanoparticles
C 08G 18/76	EP 2112205	Stable dispersion of anorganic nanoparticles
C 08G 64/00	EP 2311900	Star polymer and method for producing the same
C 08G 81/00	EP 2311900	Star polymer and method for producing the same
C 08J 3/28	EP 2297747*	ELECTRO-OPTICAL DEVICES USING DYNAMIC RECONFIGURATION OF EFFECTIVE ELECTRODE STRUCTURES
C 08J 5/24	EP 2216363	Aqueous, modified melamine resin mixture, method for producing same and use of same to saturate absorbent carriers and compound material produced using the melamine resin material
C 08J 7/04	EP 2078047*	POLYURETHANE ADHESIVE
C 08J 9/00	EP 1930366	Low-color foam compositions
C 08J 9/232	EP 1930366	Low-color foam compositions
C 08K 5/00	EP 1930366	Low-color foam compositions
C 08K 5/053	EP 2216363	Aqueous, modified melamine resin mixture, method for producing same and use of same to saturate absorbent carriers and compound material produced using the melamine resin material
C 08K 5/103	EP 1930366	Low-color foam compositions
C 08K 5/12	EP 1930366	Low-color foam compositions
C 08K 5/21	EP 2216363	Aqueous, modified melamine resin mixture, method for producing same and use of same to saturate absorbent carriers and compound material produced using the melamine resin material
C 08K 5/3412	EP 2216363	Aqueous, modified melamine resin mixture, method for producing same and use of same to saturate absorbent carriers and compound material produced using the melamine resin material
C 08L 1/02	EP 2309059	Method of improving properties of cellulose-based fibrous sheet-formed materials
C 08L 27/06	EP 1930366	Low-color foam compositions
C 08L 57/00	EP 2297747*	ELECTRO-OPTICAL DEVICES USING DYNAMIC RECONFIGURATION OF EFFECTIVE ELECTRODE STRUCTURES
C 08L 61/00	EP 2291453*	FORMALDEHYDE-FREE ABRASIVE ARTICLE
C 08L 61/06	EP 2291453*	FORMALDEHYDE-FREE ABRASIVE ARTICLE
C 08L 61/24	EP 2216363	Aqueous, modified melamine resin mixture, method for producing same and use of same to saturate absorbent carriers and compound material produced using the melamine resin material
C 08L 61/28	EP 2216363	Aqueous, modified melamine resin mixture, method for producing same and use of same to saturate absorbent carriers and compound material produced using the melamine resin material

(51)	Број објаве европске пријаве патента	(51)
C 08L 67/02	EP 2294133*	FAST CURING VULCANIZABLE MULTI-PART ELASTOMER COMPOSITION, AND PROCESS FOR BLENDING, INJECTION MOLDING AND CURING OF ELASTOMER COMPOSITION
C 08L 91/00	EP 2291453*	FORMALDEHYDE-FREE ABRASIVE ARTICLE
C 08L 95/00	EP 2310460*	PROCESS FOR COLD-IN-PLACE RECYCLING USING FOAMED ASPHALT AND LUBRICATION ADDITIVE
C 08L 97/02	EP 2291453*	FORMALDEHYDE-FREE ABRASIVE ARTICLE
C 08L 101/06	EP 2291453*	FORMALDEHYDE-FREE ABRASIVE ARTICLE
C 09C 1/02	EP 2322581	Precipitated magnesium carbonate
C 09D 7/02	EP 2112205	Stable dispersion of anorganic nanoparticles
C 09D 7/12	EP 2112205	Stable dispersion of anorganic nanoparticles
C 09D 101/10	EP 2309059	Method of improving properties of cellulose-based fibrous sheet-formed materials
C 09D 175/04	EP 2078047*	POLYURETHANE ADHESIVE
C 09D 175/04	EP 2112205	Stable dispersion of anorganic nanoparticles
C 09J 7/00	EP 2199355	Adhesive dispensing tape including a transparent carrier material
C 09J 7/00	EP 2322585	Adhesive composition, circuit connecting material and connecting structure of circuit member
C 09J 7/02	EP 2199355	Adhesive dispensing tape including a transparent carrier material
C 09J 175/04	EP 2078047*	POLYURETHANE ADHESIVE
C 09J 201/00	EP 2322585	Adhesive composition, circuit connecting material and connecting structure of circuit member
C 09K 11/06	EP 2294159*	DISTANCE-CONTROLLED ENERGY TRANSFER DYE COMPLEXES
C 10B 49/06	EP 2300568*	A TWO-STAGE HIGH-TEMPERATURE PREHEATED STEAM GASIFIER
C 10C 3/00	EP 2310460*	PROCESS FOR COLD-IN-PLACE RECYCLING USING FOAMED ASPHALT AND LUBRICATION ADDITIVE
C 10G 3/00	EP 2305778	Fuel and fuel additives capable for use for internal combustion engines and process for the production thereof
C 10J 3/14	EP 2300568*	A TWO-STAGE HIGH-TEMPERATURE PREHEATED STEAM GASIFIER
C 10J 3/16	EP 2300568*	A TWO-STAGE HIGH-TEMPERATURE PREHEATED STEAM GASIFIER
C 10J 3/36	EP 2300568*	A TWO-STAGE HIGH-TEMPERATURE PREHEATED STEAM GASIFIER
C 10J 3/54	EP 2300568*	A TWO-STAGE HIGH-TEMPERATURE PREHEATED STEAM GASIFIER
C 10J 3/56	EP 2300568*	A TWO-STAGE HIGH-TEMPERATURE PREHEATED STEAM GASIFIER
C 10L 1/02	EP 2305778	Fuel and fuel additives capable for use for internal combustion engines and process for the production thereof
C 10L 5/40	EP 2321390*	MODULARIZED SYSTEM AND METHOD FOR UREA PRODUCTION USING A BIO-MASS FEEDSTOCK
C 11C 3/10	EP 2297584*	HIGH THROUGHPUT METHOD FOR ANALYZING THE FATTY ACID COMPOSITION IN PLASMA PHOSPHOGLYCERIDES
C 11D 17/00	EP 2213718	Coated shaped solid cleaning composition
C 12C 11/07	EP 2315821*	AN IMPROVED METHOD OF BREWING BEER
C 12H 1/04	EP 2133413	DEVICE FOR TREATING AND PURIFYING A LIQUID PRODUCT
C 12H 1/06	EP 2315821*	AN IMPROVED METHOD OF BREWING BEER
C 12H 1/07	EP 2133413	DEVICE FOR TREATING AND PURIFYING A LIQUID PRODUCT
C 12M 1/34	EP 2310485*	BIOSENSOR FEATURING CONFINEMENT OF DEPOSITED MATERIAL AND INTRA-WELL SELF-REFERENCING
C 12N 1/13	EP 2294179*	INDUCTION OF FLOCCULATION IN PHOTOSYNTHETIC ORGANISMS
C 12N 1/15	EP 2319923	PYRIPYROPENE A BIOSYNTHETIC GENE
C 12N 1/20	EP 2236600	Phytases

(51)	Број објаве европске пријаве патента	(51)
C 12N 1/20	EP 2264156	Phytases
C 12N 1/20	EP 2304040*	PRODUCTION OF ALKENES BY ENZYMATIC DECARBOXYLATION OF 3-HYDROXYALKANOIC ACIDS
C 12N 1/21	EP 2304040*	PRODUCTION OF ALKENES BY ENZYMATIC DECARBOXYLATION OF 3-HYDROXYALKANOIC ACIDS
C 12N 1/21	EP 2319923	PYRIPYROPENE A BIOSYNTHETIC GENE
C 12N 5/00	EP 2300600*	METHODS FOR IMPROVING VIABILITY AND PRODUCTIVITY IN CELL CULTURE
C 12N 5/00	EP 2310491*	SELF-ASSEMBLING TISSUE MODULES
C 12N 5/00	EP 2313496*	DIFFERENTIATED ANUCLEATED CELLS AND METHOD FOR PREPARING THE SAME
C 12N 5/02	EP 2318520*	COMPOSITIONS FOR MESODERM DERIVED ISL1+ MULTIPOTENT CELLS (IMPS), EPICARDIAL PROGENITOR CELLS (EPCS) AND MULTIPOTENT CXCR4+CD56+ CELLS (C56CS) AND METHODS OF USE
C 12N 5/0775	EP 2318520*	COMPOSITIONS FOR MESODERM DERIVED ISL1+ MULTIPOTENT CELLS (IMPS), EPICARDIAL PROGENITOR CELLS (EPCS) AND MULTIPOTENT CXCR4+CD56+ CELLS (C56CS) AND METHODS OF USE
C 12N 5/08	EP 2297304*	HUMAN BONE-FORMING CELLS IN THE TREATMENT OF CONDITIONS AND BONE DISEASES ASSOCIATED WITH IMMUNODEFICIENCY OR IMMUNOSUPPRESSION
C 12N 5/10	EP 2297185*	PARVOVIRAL CAPSID WITH INCORPORATED GLY-ALA REPEAT REGION
C 12N 5/10	EP 2300500*	ANTI-FLT3 ANTIBODIES
C 12N 5/10	EP 2313496*	DIFFERENTIATED ANUCLEATED CELLS AND METHOD FOR PREPARING THE SAME
C 12N 5/10	EP 2314620	Binding molecules capable of neutralizing rabies virus and uses thereof
C 12N 5/10	EP 2314621	Binding molecules capable of neutralizing rabies virus and uses thereof
C 12N 5/12	EP 2081962*	NOVEL ANTI-NOTCH3 ANTIBODIES AND THEIR USE IN THE DETECTION AND DIAGNOSIS OF DISEASE
C 12N 5/20	EP 2301576	Therapeutic use of Anti-CS1 Antibodies
C 12N 5/22	EP 2303322*	RECOMBINANT MODIFIED VACCINIA VIRUS MEASLES VACCINE
C 12N 7/00	EP 2300023*	MICROORGANISMS FOR PREVENTING AND TREATING NEOPLASMS ACCOMPANYING CELLULAR THERAPY
C 12N 7/01	EP 2303322*	RECOMBINANT MODIFIED VACCINIA VIRUS MEASLES VACCINE
C 12N 7/04	EP 2297185*	PARVOVIRAL CAPSID WITH INCORPORATED GLY-ALA REPEAT REGION
C 12N 9/00	EP 2310029*	SUPPRESSION OF CANCERS
C 12N 9/10	EP 2296495*	A CHOLESTEROL REDUCED MEAT BASED FOOD PRODUCT
C 12N 9/16	EP 1939296	Methods for the preparation of a fine chemical by fermentation
C 12N 9/16	EP 2236600	Phytases
C 12N 9/16	EP 2264156	Phytases
C 12N 9/42	EP 2318524*	CONSTRUCTS AND METHODS FOR THE PRODUCTION AND SECRETION OF POLYPEPTIDES
C 12N 9/64	EP 2308967	Cleavage of VEGF and VEGF receptor by wildtype and mutant MT-SP1
C 12N 9/68	EP 2297317*	COMPOSITION, METHOD AND KIT FOR PREPARING PLASMIN
C 12N 9/84	EP 2109672*	DNA SEQUENCE ENCODING PENICILLIN ACYLASE, NOVEL RECOMBINANT DNA CONSTRUCTS AND RECOMBINANT MICROORGANISMS CARRYING THIS SEQUENCE
C 12N 9/88	EP 2304040*	PRODUCTION OF ALKENES BY ENZYMATIC DECARBOXYLATION OF 3-HYDROXYALKANOIC ACIDS

(51)	Број објаве европске пријаве патента	(51)
C 12N 9/88	EP 2315834*	THE TUBERCULOSIS RV2386C PROTEIN, COMPOSITIONS AND USES THEREOF
C 12N 9/90	EP 2315834*	THE TUBERCULOSIS RV2386C PROTEIN, COMPOSITIONS AND USES THEREOF
C 12N 9/92	EP 2310499*	MICROORGANISM EXPRESSING ALDOSE-1-EPIMERASE
C 12N 15/00	EP 2063908*	USE OF MODIFIED INTERLEUKIN-8 PROTEINS FOR TREATING REPERFUSION INJURY OR TRANSPLANT REJECTION
C 12N 15/00	EP 2300023*	MICROORGANISMS FOR PREVENTING AND TREATING NEOPLASMS ACCOMPANYING CELLULAR THERAPY
C 12N 15/09	EP 2119706	PYRIDINE OR PYRIMIDINE DERIVATIVE HAVING EXCELLENT CELL GROWTH INHIBITION EFFECT AND EXCELLENT ANTI-TUMOR EFFECT ON CELL STRAIN HAVING AMPLIFICATION OF HGFR GENE
C 12N 15/09	EP 2307543*	IMPROVED PROTEIN EXPRESSION SYSTEM
C 12N 15/09	EP 2319869	ANTIBODY AGAINST OXIDIZED LDL/ß²GPI COMPLEX AND USE OF THE SAME
C 12N 15/09	EP 2319923	PYRIPYROPENE A BIOSYNTHETIC GENE
C 12N 15/11	EP 2236600	Phytases
C 12N 15/11	EP 2264156	Phytases
C 12N 15/11	EP 2300609*	NOVEL IMMUNOADJUVANT FLAGELLIN-BASED COMPOUNDS AND USE THEREOF
C 12N 15/11	EP 2307029*	RNA ANTAGONISTS TARGETING HSP27
C 12N 15/11	EP 2310506*	RNA ANTAGONISTS TARGETING GLI2
C 12N 15/113	EP 2221378	Compositions and methods for regulating complement system
C 12N 15/113	EP 2223692	RNAi inhibition of alpha-ENaC expression
C 12N 15/113	EP 2223693	RNAi inhibition of alpha-ENaC expression
C 12N 15/113	EP 2223694	RNAi inhibition of alpha-ENaC expression
C 12N 15/113	EP 2223695	RNAi inhibition of alpha-ENaC expression
C 12N 15/113	EP 2224004	RNAi inhibition of alpha-ENaC expression
C 12N 15/113	EP 2224005	RNAi inhibition of alpha-ENaC expression
C 12N 15/12	EP 2294197*	VARIANT HHIP1 PROTEIN AND METHODS AND USES THEREOF
C 12N 15/12	EP 2322150	Method of identifying GLP-1 secretagogues
C 12N 15/12	EP 2322151	Sustained release formulation comprising a GPR119 agonist and a DPP-IV inhibitor
C 12N 15/12	EP 2322152	Method of preparing a composition comprising a GPR119 agonist
C 12N 15/12	EP 2322156	Composition for the treatment of diabetes and conditions related thereto and for the treatment of conditions ameliorated by increasing a blood GLP-1 level
C 12N 15/12	EP 2322157	Composition for the treatment of diabetes and conditions related thereto and for the treatment of conditions ameliorated by increasing a blood GLP-1 level
C 12N 15/13	EP 2081962*	NOVEL ANTI-NOTCH3 ANTIBODIES AND THEIR USE IN THE DETECTION AND DIAGNOSIS OF DISEASE
C 12N 15/13	EP 2236519	Human GM-CSF antigen binding proteins
C 12N 15/13	EP 2300500*	ANTI-FLT3 ANTIBODIES
C 12N 15/13	EP 2314620	Binding molecules capable of neutralizing rabies virus and uses thereof
C 12N 15/13	EP 2314621	Binding molecules capable of neutralizing rabies virus and uses thereof
C 12N 15/52	EP 1939296	Methods for the preparation of a fine chemical by fermentation
C 12N 15/55	EP 2109672*	DNA SEQUENCE ENCODING PENICILLIN ACYLASE, NOVEL RECOMBINANT DNA CONSTRUCTS AND RECOMBINANT MICROORGANISMS CARRYING THIS SEQUENCE
C 12N 15/55	EP 2236600	Phytases
C 12N 15/55	EP 2264156	Phytases
C 12N 15/60	EP 2304040*	PRODUCTION OF ALKENES BY ENZYMATIC DECARBOXYLATION OF 3-HYDROXYALKANOIC ACIDS

(51)	Број објаве европске пријаве патента	(51)
C 12N 15/60	EP 2315834*	THE TUBERCULOSIS RV2386C PROTEIN, COMPOSITIONS AND USES THEREOF
C 12N 15/61	EP 2315834*	THE TUBERCULOSIS RV2386C PROTEIN, COMPOSITIONS AND USES THEREOF
C 12N 15/62	EP 2304034*	AN ADAPTER MOLECULE FOR THE DELIVERY OF ADENOVIRUS VECTORS
C 12N 15/62	EP 2310410*	TNF- ANTAGONIST MULTI-TARGET BINDING PROTEINS
C 12N 15/62	EP 2310508*	TGF-B ANTAGONIST MULTI-TARGET BINDING PROTEINS
C 12N 15/62	EP 2318524*	CONSTRUCTS AND METHODS FOR THE PRODUCTION AND SECRETION OF POLYPEPTIDES
C 12N 15/62	EP 2321345*	MULTI-SPECIFIC BINDING PROTEINS TARGETING B CELL DISORDERS
C 12N 15/63	EP 2294179*	INDUCTION OF FLOCCULATION IN PHOTOSYNTHETIC ORGANISMS
C 12N 15/63	EP 2300500*	ANTI-FLT3 ANTIBODIES
C 12N 15/63	EP 2304040*	PRODUCTION OF ALKENES BY ENZYMATIC DECARBOXYLATION OF 3-HYDROXYALKANOIC ACIDS
C 12N 15/63	EP 2314620	Binding molecules capable of neutralizing rabies virus and uses thereof
C 12N 15/63	EP 2314621	Binding molecules capable of neutralizing rabies virus and uses thereof
C 12N 15/74	EP 2318524*	CONSTRUCTS AND METHODS FOR THE PRODUCTION AND SECRETION OF POLYPEPTIDES
C 12N 15/82	EP 2297189*	TOXIN GENES AND METHODS FOR THEIR USE
C 12N 15/82	EP 2297190*	AXMI-115, AXMI-113, AXMI-005, AXMI-163 AND AXMI-184: VIP3A INSECTICIDAL PROTEINS FROM BACILLUS THURINGIENSIS AND METHODS FOR THEIR USE
C 12N 15/82	EP 2297192*	PLANTS HAVING ENHANCED YIELD-RELATED TRAITS AND A METHOD FOR MAKING THE SAME BY OVEREXPRESSING A POLYNUCLEOTIDE ENCODING A TFL1-LIKE PROTEIN
C 12N 15/85	EP 2295591	SELF-INACTIVATING HELPER ADENOVIRUSES FOR THE PRODUCTION OF HIGH-CAPACITY RECOMBINANT ADENOVIRUSES
C 12N 15/861	EP 2295591	SELF-INACTIVATING HELPER ADENOVIRUSES FOR THE PRODUCTION OF HIGH-CAPACITY RECOMBINANT ADENOVIRUSES
C 12N 15/861	EP 2298925	SYSTEM FOR PACKAGING HIGH-CAPACITY ADENOVIRUSES
C 12N 15/861	EP 2304034*	AN ADAPTER MOLECULE FOR THE DELIVERY OF ADENOVIRUS VECTORS
C 12N 15/863	EP 2303322*	RECOMBINANT MODIFIED VACCINIA VIRUS MEASLES VACCINE
C 12N 15/864	EP 2297185*	PARVOVIRAL CAPSID WITH INCORPORATED GLY-ALA REPEAT REGION
C 12P 5/02	EP 2304040*	PRODUCTION OF ALKENES BY ENZYMATIC DECARBOXYLATION OF 3-HYDROXYALKANOIC ACIDS
C 12P 7/10	EP 2310499*	MICROORGANISM EXPRESSING ALDOSE-1-EPIMERASE
C 12P 7/10	EP 2318524*	CONSTRUCTS AND METHODS FOR THE PRODUCTION AND SECRETION OF POLYPEPTIDES
C 12P 7/62	EP 2298755	METHOD OF PRODUCING BICYCLO[3.1.0]HEXANE DERIVATIVE USING ENZYME
C 12P 13/08	EP 1939296	Methods for the preparation of a fine chemical by fermentation
C 12P 17/18	EP 2319923	PYRIPYROPENE A BIOSYNTHETIC GENE
C 12P 21/02	EP 2236600	Phytases
C 12P 21/02	EP 2264156	Phytases
C 12P 21/02	EP 2318524*	CONSTRUCTS AND METHODS FOR THE PRODUCTION AND SECRETION OF POLYPEPTIDES
C 12P 21/06	EP 2297317*	COMPOSITION, METHOD AND KIT FOR PREPARING PLASMIN

(51)	Број објаве европске пријаве патента	(51)
C 12P 21/08	EP 2297208*	DUAL VARIABLE DOMAIN IMMUNOGLOBULINS AND USES THEREOF
C 12P 21/08	EP 2297209*	DUAL VARIABLE DOMAIN IMMUNOGLOBULINS AND USES THEREOF
C 12Q 1/00	EP 2300823*	BLOOD TRANSCRIPTIONAL SIGNATURE OF MYCOBACTERIUM TUBERCULOSIS INFECTION
C 12Q 1/02	EP 2294413*	METHOD FOR SCREENING FOR COMPOUNDS THAT INHIBIT NEURODEGENERATION
C 12Q 1/37	EP 2297334*	BIOMARKER FOR ASSESSING RESPONSE TO CHYMASE TREATMENT
C 12Q 1/68	EP 2061906*	METHODS AND COMPOSITIONS FOR THE DIAGNOSIS AND TREATMENT OF LUNG CANCER USING PDGFRA, KIT OR KDR GENE AS GENETIC MARKER
C 12Q 1/68	EP 2119706	PYRIDINE OR PYRIMIDINE DERIVATIVE HAVING EXCELLENT CELL GROWTH INHIBITION EFFECT AND EXCELLENT ANTI-TUMOR EFFECT ON CELL STRAIN HAVING AMPLIFICATION OF HGFR GENE
C 12Q 1/68	EP 2233584	Use of CLEC1B for the determination of cardiovascular and thrombotic risk
C 12Q 1/68	EP 2297356*	SYSTEM AND METHOD FOR NUCLEIC ACIDS SEQUENCING BY PHASED SYNTHESIS
C 12Q 1/68	EP 2305837	Method for diagnosis and treatment of a mental disease
C 12Q 1/68	EP 2310530*	METHOD FOR DIAGNOSING AND PREDICTING CEREBELLAR ATAXIA
C 12Q 1/68	EP 2313522*	USE OF GENETIC MARKERS FOR IDENTIFYING THE RESPONSE TO INTERFERON TREATMENT IN MULTIPLE SCLEROSIS PATIENTS
C 12Q 1/68	EP 2316970	METHODS FOR THE TREATMENT AND DIAGNOSIS OF CANCER
C 12Q 1/68	EP 2318541*	METHODS FOR PLANT FIBER CHARACTERIZATION AND IDENTIFICATION
C 12Q 1/68	EP 2318545*	USE OF A COX-2 INHIBITOR FOR THE TREATMENT OF A COX-2 DEPENDENT DISORDER IN A PATIENT NOT CARRYING HLA ALLELES ASSOCIATED WITH HEPATOTOXICITY
C 12Q 1/68	EP 2318548*	METHODS AND SYSTEMS FOR PREDICTING RESPONSE OF CELLS TO A THERAPEUTIC AGENT
C 12Q 1/68	EP 2318551*	SYSTEM AND METHODS FOR MEASURING BIOMARKER PROFILES
C 12Q 1/68	EP 2321789*	METHODS AND SYSTEMS FOR ASSESSMENT OF CLINICAL INFERTILITY
C 12R 1/865	EP 2310499*	MICROORGANISM EXPRESSING ALDOSE-1-EPIMERASE
C 13K 13/00	EP 2321042*	AUTOMATED OLIGOSACCHARIDE SYNTHESIZER
C 22C 9/00	EP 2307585*	SUPERELASTIC ALLOY STRUCTURAL GEOMETRY FOR ULTRAHIGH MECHANICAL DAMPING
C 22C 19/03	EP 2307585*	SUPERELASTIC ALLOY STRUCTURAL GEOMETRY FOR ULTRAHIGH MECHANICAL DAMPING
C 22C 38/12	EP 2057298*	STEEL, AND PROCESSING METHOD FOR THE PRODUCTION OF HIGHER-STRENGTH FRACTURE-SPLITTABLE MACHINE COMPONENTS
C 23C 16/40	EP 2166562	Method for forming a capacitor having a strontium/barium titanium oxide dielectric layer by means of ALD and memory device comprising such a capacitor
C 23C 16/455	EP 2166562	Method for forming a capacitor having a strontium/barium titanium oxide dielectric layer by means of ALD and memory device comprising such a capacitor
C 23C 16/458	EP 2251453	Vessel holder
C 23C 16/505	EP 2251453	Vessel holder
C 23C 22/53	EP 2224037	Method for passivating metal substrate belts
C 25D 5/48	EP 2224037	Method for passivating metal substrate belts
C 30B 7/00	EP 2321022*	PROCESS FOR IMPROVING CRYSTALLINITY

(51)	Број објаве европске пријаве патента	(51)
C 30B 7/00	EP 2321023*	PROCESS FOR IMPROVING CRYSTALLINITY OF FLUTICASONE PARTICLES
C 30B 13/00	EP 2297034*	METHOD FOR PREPARING HIGH-PURITY METALLURGICAL-GRADE SILICON
C 30B 13/00	EP 2297035*	METHOD AND APPARATUS FOR PURIFYING METALLURGICAL GRADE SILICON BY DIRECTIONAL SOLIDIFICATION AND FOR OBTAINING SILICON INGOTS FOR PHOTOVOLTAIC USE
C 30B 33/00	EP 2319070*	PASSIVATION OF ALUMINUM NITRIDE SUBSTRATES
D 01B 1/00	EP 2312025	METHOD FOR PROCESSING BAST-FIBER MATERIALS
D 01F 9/127	EP 2224045	Process for producing carbon nanofibres and/or carbon nanotubes
D 01F 9/16	EP 2224045	Process for producing carbon nanofibres and/or carbon nanotubes
D 01G 21/00	EP 2312025	METHOD FOR PROCESSING BAST-FIBER MATERIALS
D 03D 1/00	EP 2294255*	SHOCK ABSORBING FABRIC STRUCTURES
D 03D 11/00	EP 2294255*	SHOCK ABSORBING FABRIC STRUCTURES
D 03D 11/02	EP 2294255*	SHOCK ABSORBING FABRIC STRUCTURES
D 03D 15/00	EP 2294255*	SHOCK ABSORBING FABRIC STRUCTURES
D 03D 15/04	EP 2294255*	SHOCK ABSORBING FABRIC STRUCTURES
D 03D 15/08	EP 2294255*	SHOCK ABSORBING FABRIC STRUCTURES
D 06C 7/02	EP 2294255*	SHOCK ABSORBING FABRIC STRUCTURES
D 06M 16/00	EP 2317984*	ARTICLES OF MANUFACTURE RELEASING AN ACTIVE INGREDIENT
D 21B 1/02	EP 2296858*	METHOD FOR RECYCLING COMPOSITE MATERIAL
D 21H 17/14	EP 2309059	Method of improving properties of cellulose-based fibrous sheet-formed materials
D 21H 17/15	EP 2309059	Method of improving properties of cellulose-based fibrous sheet-formed materials
D 21H 17/18	EP 2309059	Method of improving properties of cellulose-based fibrous sheet-formed materials
D 21H 17/24	EP 2309059	Method of improving properties of cellulose-based fibrous sheet-formed materials
D 21H 17/25	EP 2309059	Method of improving properties of cellulose-based fibrous sheet-formed materials
D 21H 17/28	EP 2309059	Method of improving properties of cellulose-based fibrous sheet-formed materials
D 21H 17/37	EP 2309059	Method of improving properties of cellulose-based fibrous sheet-formed materials
D 21H 17/43	EP 2309059	Method of improving properties of cellulose-based fibrous sheet-formed materials
D 21H 19/06	EP 2122052*	PAPER FOR AN OPAQUE LABEL IN A DRY AND WET ENVIRONMENT AND THUS OBTAINED LABEL
D 21H 19/12	EP 2309059	Method of improving properties of cellulose-based fibrous sheet-formed materials
D 21H 21/18	EP 2309059	Method of improving properties of cellulose-based fibrous sheet-formed materials
D 21H 23/24	EP 2309059	Method of improving properties of cellulose-based fibrous sheet-formed materials
D 21H 23/28	EP 2309059	Method of improving properties of cellulose-based fibrous sheet-formed materials
D 21H 23/50	EP 2309059	Method of improving properties of cellulose-based fibrous sheet-formed materials
E 01B 9/30	EP 2204494	Elastic tensioning clamp and rail attachment for same
E 01B 9/30	EP 2318587*	ANGULAR GUIDE PLATE AND SYSTEM FOR FIXING A RAIL
E 01B 9/48	EP 2204494	Elastic tensioning clamp and rail attachment for same
E 01C 1/00	EP 2294029*	A PAVING WITH A POLLUTION-ABATING ACTIVITY AND A PHOTOCATALYTIC MIXTURE FOR ITS PREPARATION
E 01C 11/22	EP 2294029*	A PAVING WITH A POLLUTION-ABATING ACTIVITY AND A PHOTOCATALYTIC MIXTURE FOR ITS PREPARATION
E 02D 5/80	EP 2315882*	PILE FOR FOUNDATION
E 02F 3/36	EP 2233642	Quick coupler for construction machines

(51)	Број објаве европске пријаве патента	(51)
E 02F 9/22	EP 2233642	Quick coupler for construction machines
E 03C 1/28	EP 2315544*	FOAM SHOWER BASE ELEMENT
E 03D 9/02	EP 2213718	Coated shaped solid cleaning composition
E 04B 1/26	EP 2115228*	BUILDING
E 04B 1/343	EP 1892346	Dismantleable room module of wall panels interconnected by profiles
E 04B 1/68	EP 2297411*	FOAM SEALING STRIP
E 04C 5/01	EP 2310165*	METHOD FOR PRODUCING STEEL FIBERS
E 04D 1/36	EP 2221164	Ridge and arris role with welded seam
E 04D 3/35	EP 1990478	A building roof structure
E 04D 3/365	EP 2304124*	ROOF STRUCTURE
E 04D 13/00	EP 2236691	Assembly and method for checking roofs
E 04D 13/17	EP 2221164	Ridge and arris role with welded seam
E 04G 1/22	EP 2300311*	SUPPORT PLATFORM FOR WORKERS DEALING WITH MAINTENANCE AND CONSTRUCTION OF MEANS OF TRANSPORT
E 04G 23/02	EP 2294270*	METHODS FOR REINFORCING EXISTING LATTICE FRAME STRUCTURES HAVING HOLLOW STEEL PRIMARY ELEMENTS, PARTICULARLY STEEL TOWERS WITH TUBULAR LEGS
E 04H 3/12	EP 2224076	Stand
E 04H 12/14	EP 2294270*	METHODS FOR REINFORCING EXISTING LATTICE FRAME STRUCTURES HAVING HOLLOW STEEL PRIMARY ELEMENTS, PARTICULARLY STEEL TOWERS WITH TUBULAR LEGS
E 05B 3/06	EP 1953311	Return spring arrangement for door or window fittings and door or window fittings
E 05B 15/04	EP 1953311	Return spring arrangement for door or window fittings and door or window fittings
E 05B 19/06	EP 2310598*	CYLINDER LOCK WITH CYLINDER HOUSING AND FLAT KEY FOR A CYLINDER LOCK
E 05B 27/02	EP 2310598*	CYLINDER LOCK WITH CYLINDER HOUSING AND FLAT KEY FOR A CYLINDER LOCK
E 05B 27/06	EP 2310598*	CYLINDER LOCK WITH CYLINDER HOUSING AND FLAT KEY FOR A CYLINDER LOCK
E 05B 63/04	EP 1953311	Return spring arrangement for door or window fittings and door or window fittings
E 05B 73/00	EP 2313586*	ANTI-THEFT DEVICES FOR PORTABLE OBJECTS SUCH AS LAPTOPS
E 05D 7/00	EP 2304146*	HINGED OPENING DEVICE FOR A WINDOW, A DOOR, OR THE LIKE
E 05D 11/00	EP 2316154*	HOUSING HAVING A BURGLAR-PROOF DOOR HINGE
E 05D 15/30	EP 2304146*	HINGED OPENING DEVICE FOR A WINDOW, A DOOR, OR THE LIKE
E 05D 15/52	EP 2304146*	HINGED OPENING DEVICE FOR A WINDOW, A DOOR, OR THE LIKE
E 05F 5/00	EP 2053190	Regulation mechanism for sliding doors
E 05F 15/14	EP 2241709	Simultaneous displacement device for sliding doors
E 05F 17/00	EP 2241709	Simultaneous displacement device for sliding doors
E 06B 1/62	EP 2297411*	FOAM SEALING STRIP
E 06B 1/62	EP 2304152*	WINDOW FRAME, METHOD FOR FITTING A WINDOW, FOAM SEALING STRIP, METHOD FOR SEALING A WINDOW FRAME AND CONTAINER COMPRISING A FOAM SEALING STRIP
E 06B 3/46	EP 2053190	Regulation mechanism for sliding doors
E 06B 7/215	EP 2261453	Window or door
E 06B 9/323	EP 2213827	A readjustable Venetian blind, a method of configuring the blind and a method of suspending the blind
E 06B 9/382	EP 2213827	A readjustable Venetian blind, a method of configuring the blind and a method of suspending the blind

(51)	Број објаве европске пријаве патента	(51)
E 06B 9/388	EP 2213827	A readjustable Venetian blind, a method of configuring the blind and a method of suspending the blind
E 21B 17/00	EP 2297427*	CEMENTING SUB FOR ANNULUS CEMENTING
E 21B 33/124	EP 2297427*	CEMENTING SUB FOR ANNULUS CEMENTING
E 21B 33/124	EP 2310623*	WELLBORE FLUID TREATMENT PROCESS AND INSTALLATION
E 21B 33/126	EP 2294279*	DOWNHOLE SUB WITH HYDRAULICALLY ACTUABLE SLEEVE VALVE
E 21B 33/14	EP 2297427*	CEMENTING SUB FOR ANNULUS CEMENTING
E 21B 34/10	EP 2294279*	DOWNHOLE SUB WITH HYDRAULICALLY ACTUABLE SLEEVE VALVE
E 21B 34/14	EP 2294279*	DOWNHOLE SUB WITH HYDRAULICALLY ACTUABLE SLEEVE VALVE
E 21B 34/14	EP 2297427*	CEMENTING SUB FOR ANNULUS CEMENTING
E 21B 43/25	EP 2310623*	WELLBORE FLUID TREATMENT PROCESS AND INSTALLATION
E 21C 45/00	EP 2318657*	A METHOD OF MINING AND PROCESSING SEABED SEDIMENT
E 21D 9/06	EP 2304177*	APPARATUS AND METHOD FOR MONITORING TUNNEL BORING EFFICIENCY
E 21D 9/08	EP 2304177*	APPARATUS AND METHOD FOR MONITORING TUNNEL BORING EFFICIENCY
F 02B 33/30	EP 2300699*	PART-LOAD CONTROL IN A SPLIT-CYCLE ENGINE
F 02G 5/00	EP 2313634*	SYSTEM AND METHOD FOR USING BOARD PLANT FLUE GASES IN THE PRODUCTION OF SYNGAS
F 02M 51/00	EP 2224123	Piezoelectric actuator
F 02M 51/06	EP 2224123	Piezoelectric actuator
F 02M 55/02	EP 2204574	Fuel injection system
F 02M 61/16	EP 2224123	Piezoelectric actuator
F 02M 63/02	EP 2204574	Fuel injection system
F 03B 3/04	EP 2297451*	FLOW CONVERTER
F 03B 13/14	EP 2010043987	DEVICE FOR GENERATING ELECTRIC ENERGY FROM A RENEWABLE SOURCE
F 03B 13/16	EP 2010043987	DEVICE FOR GENERATING ELECTRIC ENERGY FROM A RENEWABLE SOURCE
F 03B 13/18	EP 2010043987	DEVICE FOR GENERATING ELECTRIC ENERGY FROM A RENEWABLE SOURCE
F 03B 13/24	EP 2010043987	DEVICE FOR GENERATING ELECTRIC ENERGY FROM A RENEWABLE SOURCE
F 03B 17/06	EP 2297451*	FLOW CONVERTER
F 16B 19/10	EP 2253857	Catch element
F 16C 11/00	EP 2304253*	HIGH-TEMPERATURE BEARING ASSEMBLIES AND METHODS OF MAKING THE SAME
F 16C 11/06	EP 2304253*	HIGH-TEMPERATURE BEARING ASSEMBLIES AND METHODS OF MAKING THE SAME
F 16D 65/06	EP 2315965*	BLOCK FOR BRAKE WITH RELIEF GROOVES
F 16F 7/00	EP 2307585*	SUPERELASTIC ALLOY STRUCTURAL GEOMETRY FOR ULTRAHIGH MECHANICAL DAMPING
F 16F 7/02	EP 2307585*	SUPERELASTIC ALLOY STRUCTURAL GEOMETRY FOR ULTRAHIGH MECHANICAL DAMPING
F 16F 15/00	EP 2307585*	SUPERELASTIC ALLOY STRUCTURAL GEOMETRY FOR ULTRAHIGH MECHANICAL DAMPING
F 16F 15/36	EP 2310263*	METHOD, APPARATUS AND SYSTEM FOR REDUCING VIBRATION IN A ROTARY SYSTEM OF AN AIRCRAFT, SUCH AS A ROTOR OF A HELICOPTER
F 16G 3/08	EP 2010015919	BELT PIECE FOR THE TRANSPORT OF ARTICLES AND/OR FOR POWER TRANSMISSIONS AND METHOD FOR OBTAINING A CLOSED LOOPED BELT STARTING FROM SAID BELT PIECE

(51)	Број објаве европске пријаве патента	(51)
F 16G 3/08	EP 2321552*	BELT PIECE FOR THE TRANSPORT OF ARTICLES AND/OR FOR POWER TRANSMISSIONS AND METHOD FOR OBTAINING A CLOSED LOOPED BELT STARTING FROM SAID BELT PIECE
F 16G 3/10	EP 2010015919	BELT PIECE FOR THE TRANSPORT OF ARTICLES AND/OR FOR POWER TRANSMISSIONS AND METHOD FOR OBTAINING A CLOSED LOOPED BELT STARTING FROM SAID BELT PIECE
F 16G 3/10	EP 2321552*	BELT PIECE FOR THE TRANSPORT OF ARTICLES AND/OR FOR POWER TRANSMISSIONS AND METHOD FOR OBTAINING A CLOSED LOOPED BELT STARTING FROM SAID BELT PIECE
F 16H 47/02	EP 2213910	Method and device for changing the gears of a hydrostatically driven multiple gear gearbox
F 16H 59/44	EP 2213910	Method and device for changing the gears of a hydrostatically driven multiple gear gearbox
F 16H 59/46	EP 2213910	Method and device for changing the gears of a hydrostatically driven multiple gear gearbox
F 16H 59/48	EP 2213910	Method and device for changing the gears of a hydrostatically driven multiple gear gearbox
F 16H 61/02	EP 2213910	Method and device for changing the gears of a hydrostatically driven multiple gear gearbox
F 16J 15/08	EP 2300740*	SEALING ARRANGEMENT FOR CYLINDRICAL SURFACES AND A SEAL TO BE USED IN SUCH SEALING ARRANGEMENTS
F 16J 15/10	EP 2310721*	SEAL
F 16J 15/28	EP 2300740*	SEALING ARRANGEMENT FOR CYLINDRICAL SURFACES AND A SEAL TO BE USED IN SUCH SEALING ARRANGEMENTS
F 16J 15/32	EP 2278198	Seal and corresponding manufacturing method
F 16J 15/32	EP 2300740*	SEALING ARRANGEMENT FOR CYLINDRICAL SURFACES AND A SEAL TO BE USED IN SUCH SEALING ARRANGEMENTS
F 16J 15/32	EP 2318739*	SEAL AND CORRESPONDING MANUFACTURING METHOD
F 16J 15/34	EP 2310724*	FLUID MIXER WITH ROTARY SHAFTS AND RELATIVE SEAL UNIT.
F 16K 1/22	EP 2251573	Isolation or regulating fitting
F 16K 5/00	EP 2303466*	A CONNECTOR FOR A GRAVITY FEED SPRAY GUN, A GRAVITY FEED SPRAY GUN AND A METHOD OF PREPARING A SPRAY PAINT
F 16K 15/02	EP 2233807	Check valve and pump with the same
F 16K 17/38	EP 2048418	Safety electrovalve
F 16K 31/06	EP 2048418	Safety electrovalve
F 16K 31/08	EP 2233807	Check valve and pump with the same
F 16K 31/56	EP 2048418	Safety electrovalve
F 16L 25/00	EP 1783413	Arrangement for connecting the ends of a metal pipe with helical corrugations with a connecting piece
F 16L 33/26	EP 1783413	Arrangement for connecting the ends of a metal pipe with helical corrugations with a connecting piece
F 16L 41/02	EP 2045504	connecting piece for protective cable pipes
F 16L 47/32	EP 2045504	connecting piece for protective cable pipes
F 16L 55/26	EP 2313766*	DEVICE AND METHOD TO ASSESS IMPAIRMENT OF PIPELINE WALL STRENGTH
F 16L 55/48	EP 2313766*	DEVICE AND METHOD TO ASSESS IMPAIRMENT OF PIPELINE WALL STRENGTH
F 16L 58/04	EP 2307783*	PIPE COATING
F 21L 4/00	EP 2321569*	PORTABLE LIGHTING DEVICES
F 21S 8/08	EP 2230445	Lighting unit and luminaire for lighting pedestrian crossings
F 21V 7/09	EP 2230445	Lighting unit and luminaire for lighting pedestrian crossings
F 21V 19/00	EP 2302985	LED assembly

(51)	Број објаве европске пријаве патента	(51)
F 22B 21/00	EP 2297517*	MEMBRANE WALL OF A LARGE-SCALE STEAM GENERATOR
F 22B 37/04	EP 2297517*	MEMBRANE WALL OF A LARGE-SCALE STEAM GENERATOR
F 23C 9/00	EP 2294336*	LOW NOX BURNER
F 23D 14/02	EP 2303083*	AN INCINERATION SYSTEM AND BURNER FOR A TOILET
F 23D 14/10	EP 2304317*	GAS BURNER FOR OVENS OR GRILLS
F 23D 14/10	EP 2307800*	GAS BURNER FOR OVENS
F 23D 14/20	EP 2294337*	GAS BURNER ASSEMBLY WITH GAS COLLECTOR AND IGNITER
F 23D 14/70	EP 2307800*	GAS BURNER FOR OVENS
F 23D 14/82	EP 2303083*	AN INCINERATION SYSTEM AND BURNER FOR A TOILET
F 23G 5/027	EP 2307803*	COMBUSTION MATERIAL PROCESS AND RELATED APPARATUS
F 23G 5/08	EP 2307803*	COMBUSTION MATERIAL PROCESS AND RELATED APPARATUS
F 23J 15/04	EP 2010025739	METHOD AND SYSTEM FOR COOLING HOT GASES BY WATER INJECTION
F 23J 15/04	EP 2221538	Energy recovery device
F 23J 15/04	EP 2221539	Energy recovery apparatus
F 23J 15/06	EP 2010025739	METHOD AND SYSTEM FOR COOLING HOT GASES BY WATER INJECTION
F 23Q 3/00	EP 2294337*	GAS BURNER ASSEMBLY WITH GAS COLLECTOR AND IGNITER
F 23Q 9/04	EP 2304317*	GAS BURNER FOR OVENS OR GRILLS
F 24C 3/10	EP 2294337*	GAS BURNER ASSEMBLY WITH GAS COLLECTOR AND IGNITER
F 24D 3/14	EP 2210866	Thin-layer heat screed construction on partition and insulating layer
F 24D 7/00	EP 2295872	Method and device for storing regenerative energy in energy recirculation systems
F 24D 19/10	EP 2295872	Method and device for storing regenerative energy in energy recirculation systems
F 24F 3/147	EP 2304326*	CROSS-PLEATED MEMBRANE CARTRIDGES, AND METHOD AND APPARATUS FOR MAKING CROSS-PLEATED MEMBRANE CARTRIDGES
F 24F 12/00	EP 2304326*	CROSS-PLEATED MEMBRANE CARTRIDGES, AND METHOD AND APPARATUS FOR MAKING CROSS-PLEATED MEMBRANE CARTRIDGES
F 24H 1/28	EP 2307816*	FIRE TUBE CONDENSING BOILER FOR GENERATING HOT WATER
F 24H 7/04	EP 2295872	Method and device for storing regenerative energy in energy recirculation systems
F 24H 9/20	EP 2216610	Thermosensitive sensor for hot water tank
F 24J 3/08	EP 2313708*	SYSTEM AND METHOD OF CAPTURING GEOTHERMAL HEAT FROM WITHIN A DRILLED WELL TO GENERATE ELECTRICITY
F 25B 30/06	EP 2313708*	SYSTEM AND METHOD OF CAPTURING GEOTHERMAL HEAT FROM WITHIN A DRILLED WELL TO GENERATE ELECTRICITY
F 25D 31/00	EP 2135022*	A MOTOR PROTECTION DEVICE
F 26B 3/12	EP 2321022*	PROCESS FOR IMPROVING CRYSTALLINITY
F 26B 3/12	EP 2321023*	PROCESS FOR IMPROVING CRYSTALLINITY OF FLUTICASONE PARTICLES
F 26B 5/06	EP 2321022*	PROCESS FOR IMPROVING CRYSTALLINITY
F 26B 5/06	EP 2321023*	PROCESS FOR IMPROVING CRYSTALLINITY OF FLUTICASONE PARTICLES
F 28B 3/04	EP 2309218	Recovery of heat from recurring charges of vapour
F 28B 11/00	EP 2309218	Recovery of heat from recurring charges of vapour

(51)	Број објаве европске пријаве патента	(51)
F 28D 21/00	EP 2313708*	SYSTEM AND METHOD OF CAPTURING GEOTHERMAL HEAT FROM WITHIN A DRILLED WELL TO GENERATE ELECTRICITY
F 28F 21/00	EP 2304326*	CROSS-PLEATED MEMBRANE CARTRIDGES, AND METHOD AND APPARATUS FOR MAKING CROSS-PLEATED MEMBRANE CARTRIDGES
F 28G 15/02	EP 2310794*	SOOTBLOWER WITH MODULAR CANOPY
F 41A 29/00	EP 2300771*	APPARATUS AND METHOD FOR CLEANING GUN BARRELS
F 41H 1/02	EP 2304378*	METHOD FOR TESTING BALLISTIC PROTECTION EQUIPMENT AND ASSOCIATED DUMMY AND PROTECTION
F 41H 5/02	EP 2297541*	APPARATUS FOR DEFEATING HIGH ENERGY PROJECTILES
G 01C 19/00	EP 2313869*	ELECTRONIC PARKING DISC COMPRISING MOVEMENT DETECTION MEANS
G 01F 23/22	EP 2216610	Thermosensitive sensor for hot water tank
G 01L 1/24	EP 2294375*	TACTILE SENSOR USING ELASTOMERIC IMAGING
G 01L 3/10	EP 2126650*	DEVICES AND METHODS FOR DETECTING RATES OF CHANGE OF TORQUE
G 01L 5/16	EP 2294375*	TACTILE SENSOR USING ELASTOMERIC IMAGING
G 01M 1/00	EP 2163873	Balancing machine for balancing vehicle wheels
G 01M 1/00	EP 2163874	Balancing machine for balancing vehicle wheels
G 01M 1/02	EP 2163875	Balancing machine for balancing vehicle wheels
G 01M 1/22	EP 1898197	Upgraded balancing machine for vehicle wheels
G 01M 3/16	EP 2236691	Assembly and method for checking roofs
G 01N 11/00	EP 2316011*	TEST APPARATUS
G 01N 11/16	EP 2316011*	TEST APPARATUS
G 01N 15/08	EP 2251453	Vessel holder
G 01N 21/27	EP 2300804*	OPTICAL MEASURING UNIT AND METHOD FOR CARRYING OUT A REFLECTIVE MEASUREMENT
G 01N 21/47	EP 2300804*	OPTICAL MEASURING UNIT AND METHOD FOR CARRYING OUT A REFLECTIVE MEASUREMENT
G 01N 21/64	EP 2294159*	DISTANCE-CONTROLLED ENERGY TRANSFER DYE COMPLEXES
G 01N 21/86	EP 2300804*	OPTICAL MEASURING UNIT AND METHOD FOR CARRYING OUT A REFLECTIVE MEASUREMENT
G 01N 23/04	EP 2140253*	USER INTERFACE FOR USE IN SECURITY SCREENING PROVIDING IMAGE ENHANCEMENT CAPABILITIES AND APPARATUS FOR IMPLEMENTING SAME
G 01N 29/04	EP 2313766*	DEVICE AND METHOD TO ASSESS IMPAIRMENT OF PIPELINE WALL STRENGTH
G 01N 29/07	EP 2300814*	SELF-PROPELLING DEVICE FOR POSITIONING OF PROBES FOR NON-DESTRUCTIVE TESTING
G 01N 29/07	EP 2313766*	DEVICE AND METHOD TO ASSESS IMPAIRMENT OF PIPELINE WALL STRENGTH
G 01N 29/265	EP 2300814*	SELF-PROPELLING DEVICE FOR POSITIONING OF PROBES FOR NON-DESTRUCTIVE TESTING
G 01N 29/28	EP 2300814*	SELF-PROPELLING DEVICE FOR POSITIONING OF PROBES FOR NON-DESTRUCTIVE TESTING
G 01N 29/34	EP 2313766*	DEVICE AND METHOD TO ASSESS IMPAIRMENT OF PIPELINE WALL STRENGTH
G 01N 33/00	EP 2303001*	METHOD FOR TESTING EFFICACY OF TREATMENT OF NEUROLOGIC DISORDERS
G 01N 33/15	EP 2119706	PYRIDINE OR PYRIMIDINE DERIVATIVE HAVING EXCELLENT CELL GROWTH INHIBITION EFFECT AND EXCELLENT ANTI-TUMOR EFFECT ON CELL STRAIN HAVING AMPLIFICATION OF HGFR GENE
G 01N 33/15	EP 2294413*	METHOD FOR SCREENING FOR COMPOUNDS THAT INHIBIT NEURODEGENERATION

(51)	Број објаве европске пријаве патента	(51)
G 01N 33/15	EP 2319869	ANTIBODY AGAINST OXIDIZED LDL/ß²GPI COMPLEX AND USE OF THE SAME
G 01N 33/48	EP 2119706	PYRIDINE OR PYRIMIDINE DERIVATIVE HAVING EXCELLENT CELL GROWTH INHIBITION EFFECT AND EXCELLENT ANTI-TUMOR EFFECT ON CELL STRAIN HAVING AMPLIFICATION OF HGFR GENE
G 01N 33/48	EP 2313769*	5-HT6 RECEPTOR AND MODULATORS THEREOF FOR THE TREATMENT OF INSULIN-RELATED DISORDERS
G 01N 33/50	EP 2119706	PYRIDINE OR PYRIMIDINE DERIVATIVE HAVING EXCELLENT CELL GROWTH INHIBITION EFFECT AND EXCELLENT ANTI-TUMOR EFFECT ON CELL STRAIN HAVING AMPLIFICATION OF HGFR GENE
G 01N 33/50	EP 2228651	IP-10 Based Immunological Monitoring
G 01N 33/50	EP 2294413*	METHOD FOR SCREENING FOR COMPOUNDS THAT INHIBIT NEURODEGENERATION
G 01N 33/50	EP 2300823*	BLOOD TRANSCRIPTIONAL SIGNATURE OF MYCOBACTERIUM TUBERCULOSIS INFECTION
G 01N 33/50	EP 2313769*	5-HT6 RECEPTOR AND MODULATORS THEREOF FOR THE TREATMENT OF INSULIN-RELATED DISORDERS
G 01N 33/50	EP 2319869	ANTIBODY AGAINST OXIDIZED LDL/ß²GPI COMPLEX AND USE OF THE SAME
G 01N 33/53	EP 2119706	PYRIDINE OR PYRIMIDINE DERIVATIVE HAVING EXCELLENT CELL GROWTH INHIBITION EFFECT AND EXCELLENT ANTI-TUMOR EFFECT ON CELL STRAIN HAVING AMPLIFICATION OF HGFR GENE
G 01N 33/53	EP 2300823*	BLOOD TRANSCRIPTIONAL SIGNATURE OF MYCOBACTERIUM TUBERCULOSIS INFECTION
G 01N 33/53	EP 2318551*	SYSTEM AND METHODS FOR MEASURING BIOMARKER PROFILES
G 01N 33/53	EP 2319868	Immunotherapeutic treatment for inducing the regression of atherosclerotic plaques
G 01N 33/53	EP 2319869	ANTIBODY AGAINST OXIDIZED LDL/ß²GPI COMPLEX AND USE OF THE SAME
G 01N 33/566	EP 2322150	Method of identifying GLP-1 secretagogues
G 01N 33/566	EP 2322151	Sustained release formulation comprising a GPR119 agonist and a DPP-IV inhibitor
G 01N 33/566	EP 2322152	Method of preparing a composition comprising a GPR119 agonist
G 01N 33/566	EP 2322156	Composition for the treatment of diabetes and conditions related thereto and for the treatment of conditions ameliorated by increasing a blood GLP-1 level
G 01N 33/566	EP 2322157	Composition for the treatment of diabetes and conditions related thereto and for the treatment of conditions ameliorated by increasing a blood GLP-1 level
G 01N 33/569	EP 2228651	IP-10 Based Immunological Monitoring
G 01N 33/569	EP 2294084*	MONOCLONAL ANTIBODIES HAVING HOMOSUBTYPE CROSS -NEUTRALIZATION PROPERTIES AGAINST INFLUENZA A VIRUSES SUBTYPE H1
G 01N 33/569	EP 2298342	Peptides protective against s. pneumoniae and compositions, methods and uses relating thereto
G 01N 33/569	EP 2303923*	HUMAN CYTOMEGALOVIRUS NEUTRALISING ANTIBODIES AND USE THEREOF
G 01N 33/569	EP 2307885*	CELLULAR COPD DIAGNOSIS
G 01N 33/569	EP 2315597*	NOVEL COMPOSITIONS AND METHODS
G 01N 33/574	EP 2119706	PYRIDINE OR PYRIMIDINE DERIVATIVE HAVING EXCELLENT CELL GROWTH INHIBITION EFFECT AND EXCELLENT ANTI-TUMOR EFFECT ON CELL STRAIN HAVING AMPLIFICATION OF HGFR GENE
G 01N 33/574	EP 2297580*	PROTEIN
G 01N 33/577	EP 2294084*	MONOCLONAL ANTIBODIES HAVING HOMOSUBTYPE CROSS -NEUTRALIZATION PROPERTIES AGAINST INFLUENZA A VIRUSES SUBTYPE H1

(51)	Број објаве европске пријаве патента	(51)
G 01N 33/58	EP 2322150	Method of identifying GLP-1 secretagogues
G 01N 33/58	EP 2322151	Sustained release formulation comprising a GPR119 agonist and a DPP-IV inhibitor
G 01N 33/58	EP 2322152	Method of preparing a composition comprising a GPR119 agonist
G 01N 33/58	EP 2322156	Composition for the treatment of diabetes and conditions related thereto and for the treatment of conditions ameliorated by increasing a blood GLP-1 level
G 01N 33/58	EP 2322157	Composition for the treatment of diabetes and conditions related thereto and for the treatment of conditions ameliorated by increasing a blood GLP-1 level
G 01N 33/68	EP 2228651	IP-10 Based Immunological Monitoring
G 01N 33/68	EP 2297334*	BIOMARKER FOR ASSESSING RESPONSE TO CHYMASE TREATMENT
G 01N 33/68	EP 2303922*	METHOD FOR THE IN VITRO DIAGNOSIS OF STROKE
G 01N 33/68	EP 2307889*	COPD DIAGNOSIS
G 01N 33/68	EP 2318551*	SYSTEM AND METHODS FOR MEASURING BIOMARKER PROFILES
G 01N 33/68	EP 2319868	Immunotherapeutic treatment for inducing the regression of atherosclerotic plaques
G 01N 33/92	EP 2297584*	HIGH THROUGHPUT METHOD FOR ANALYZING THE FATTY ACID COMPOSITION IN PLASMA PHOSPHOGLYCERIDES
G 01S 5/02	EP 2301289*	METHOD FOR CHECKING THE LOCATION OF A FEMTOCELL
G 01S 13/34	EP 2312334	Method for measuring the distance between tags
G 01S 13/74	EP 2312334	Method for measuring the distance between tags
G 01T 1/161	EP 2303114*	RADIOPHARMACEUTICAL IMAGING OF NEURODEGENERATIVE DISEASES
G 01T 1/164	EP 2303114*	RADIOPHARMACEUTICAL IMAGING OF NEURODEGENERATIVE DISEASES
G 01T 1/29	EP 2303114*	RADIOPHARMACEUTICAL IMAGING OF NEURODEGENERATIVE DISEASES
G 01V 11/00	EP 2026106	Method for geo-referenced representation of measuring values of a measuring field determined using ground detectors and detector for use
G 02B 6/44	EP 2045504	connecting piece for protective cable pipes
G 02F 1/133	EP 2297747*	ELECTRO-OPTICAL DEVICES USING DYNAMIC RECONFIGURATION OF EFFECTIVE ELECTRODE STRUCTURES
G 02F 1/1343	EP 2297747*	ELECTRO-OPTICAL DEVICES USING DYNAMIC RECONFIGURATION OF EFFECTIVE ELECTRODE STRUCTURES
G 03B 21/56	EP 2069865*	THREE-DIMENSIONAL INTERNAL BACK-PROJECTION SYSTEM AND METHOD FOR USING THE SAME
G 05D 23/19	EP 1770469	Method and system for determining characteristic thermal data of a radiator
G 06F 1/02	EP 2313969*	HIGHLY PRECISE AND LOW LEVEL SIGNAL-GENERATING DRIVERS, SYSTEMS AND METHODS OF USE
G 06F 3/01	EP 2306271	Electronic device including tactile touch-sensitive display and method of controlling same
G 06F 3/01	EP 2306538	Piezoelectric assembly
G 06F 3/01	EP 2313820*	SYSTEMS AND METHODS FOR PHYSICS-BASED TACTILE MESSAGING
G 06F 3/02	EP 2306273	Apparatus and method for invoking a function based on a gesture input
G 06F 3/023	EP 2135177*	METHOD SYSTEM AND APPARATUS FOR ENTERING TEXT ON A COMPUTING DEVICE
G 06F 3/023	EP 2306273	Apparatus and method for invoking a function based on a gesture input

(51)	Број објаве европске пријаве патента	(51)
G 06F 3/033	EP 2306273	Apparatus and method for invoking a function based on a gesture input
G 06F 3/041	EP 2306271	Electronic device including tactile touch-sensitive display and method of controlling same
G 06F 3/048	EP 2140253*	USER INTERFACE FOR USE IN SECURITY SCREENING PROVIDING IMAGE ENHANCEMENT CAPABILITIES AND APPARATUS FOR IMPLEMENTING SAME
G 06F 3/048	EP 2306273	Apparatus and method for invoking a function based on a gesture input
G 06F 3/048	EP 2313820*	SYSTEMS AND METHODS FOR PHYSICS-BASED TACTILE MESSAGING
G 06F 3/048	EP 2315549*	ANALYTE MEASUREMENT AND MANAGEMENT DEVICE AND ASSOCIATED METHODS
G 06F 11/00	EP 2137620*	INSIDER THREAT DETECTION
G 06F 15/16	EP 2315549*	ANALYTE MEASUREMENT AND MANAGEMENT DEVICE AND ASSOCIATED METHODS
G 06F 15/173	EP 2304592*	SYSTEM OF ACQUIRING SHOPPER INSIGHTS AND INFLUENCING SHOPPER PURCHASE DECISIONS
G 06F 17/00	EP 2315127	Custom entities and fields in a multi-tenant database system
G 06F 17/21	EP 2135177*	METHOD SYSTEM AND APPARATUS FOR ENTERING TEXT ON A COMPUTING DEVICE
G 06F 17/22	EP 2135177*	METHOD SYSTEM AND APPARATUS FOR ENTERING TEXT ON A COMPUTING DEVICE
G 06F 17/27	EP 2135177*	METHOD SYSTEM AND APPARATUS FOR ENTERING TEXT ON A COMPUTING DEVICE
G 06F 17/30	EP 2122513*	SYNCHRONIZATION METHODS AND SYSTEMS
G 06F 17/30	EP 2315127	Custom entities and fields in a multi-tenant database system
G 06F 19/00	EP 2137596*	METHOD AND SYSTEM FOR ORGANIZING, STORING, CONNECTING AND DISPLAYING MEDICAL INFORMATION
G 06F 19/00	EP 2318551*	SYSTEM AND METHODS FOR MEASURING BIOMARKER PROFILES
G 06K 9/20	EP 2306367	DUAL CAMERAS FACE RECOGNITION DEVICE AND METHOD
G 06M 1/04	EP 2135199*	METERED-DOSE INHALER
G 06M 1/08	EP 2135199*	METERED-DOSE INHALER
G 06N 5/02	EP 2315549*	ANALYTE MEASUREMENT AND MANAGEMENT DEVICE AND ASSOCIATED METHODS
G 06Q 30/00	EP 2297688*	ADVERTISING FORECAST AND REVENUE SYSTEMS AND METHODS
G 06Q 50/00	EP 2321789*	METHODS AND SYSTEMS FOR ASSESSMENT OF CLINICAL INFERTILITY
G 06T 3/40	EP 2140253*	USER INTERFACE FOR USE IN SECURITY SCREENING PROVIDING IMAGE ENHANCEMENT CAPABILITIES AND APPARATUS FOR IMPLEMENTING SAME
G 06T 5/00	EP 2140253*	USER INTERFACE FOR USE IN SECURITY SCREENING PROVIDING IMAGE ENHANCEMENT CAPABILITIES AND APPARATUS FOR IMPLEMENTING SAME
G 06T 15/00	EP 2296115	A graphics processing architecture employing a unified shader
G 06T 15/00	EP 2296116	A graphics processing architecture employing a unified shader
G 06T 15/00	EP 2299408	A graphics processing architecture employing a unified shader
G 06T 15/00	EP 2309460	A graphics processing architecture employing a unified shader
G 06T 15/80	EP 2299408	A graphics processing architecture employing a unified shader
G 06T 15/80	EP 2309460	A graphics processing architecture employing a unified shader
G 07C 5/00	EP 2294556*	MOBILE IDENTIFICATION TRANSMITTER IN A SAFETY SYSTEM
G 07C 5/02	EP 2313869*	ELECTRONIC PARKING DISC COMPRISING MOVEMENT DETECTION MEANS
G 07C 5/08	EP 2294556*	MOBILE IDENTIFICATION TRANSMITTER IN A SAFETY SYSTEM

(51)	Број објаве европске пријаве патента	(51)
G 07C 5/08	EP 2294557*	MOBILE IDENTIFICATION TRANSMITTER OF A SECURITY SYSTEM
G 07C 9/00	EP 2294557*	MOBILE IDENTIFICATION TRANSMITTER OF A SECURITY SYSTEM
G 07D 3/12	EP 2230646	Coin dispenser device
G 07F 17/20	EP 2297713*	AUTOMATIC COIN - OPERATED OR ELECTRONIC CARD - OPERATED WASHING MACHINE AND DRYER FOR HELMETS
G 08B 1/08	EP 2315549*	ANALYTE MEASUREMENT AND MANAGEMENT DEVICE AND ASSOCIATED METHODS
G 09B 9/30	EP 2069865*	THREE-DIMENSIONAL INTERNAL BACK-PROJECTION SYSTEM AND METHOD FOR USING THE SAME
G 09B 27/00	EP 2069865*	THREE-DIMENSIONAL INTERNAL BACK-PROJECTION SYSTEM AND METHOD FOR USING THE SAME
G 09F 3/16	EP 2301374	Kid identification wristband
G 09F 13/00	EP 2110806	Earmarked display with intelligent light points
G 09G 3/32	EP 2110806	Earmarked display with intelligent light points
G 09G 3/32	EP 2237253	Pixel circuit, display using the same and driving method for the same
G 09G 3/34	EP 2122840*	BACKLIGHT AND AMBIENT LIGHT SENSOR SYSTEM
G 10K 15/04	EP 2319036*	APPARATUS AND METHOD FOR PRODUCING EXPLOSIONS
G 11B 33/04	EP 2272399	DEVICE FOR STORING COMPACT DISCS
G 12B 21/02	EP 2133883	Method for cost-efficient manufacturing diamond tips for ultra-high resolution electrical measurements and devices obtained thereof
H 01B 1/12	EP 2297747*	ELECTRO-OPTICAL DEVICES USING DYNAMIC RECONFIGURATION OF EFFECTIVE ELECTRODE STRUCTURES
H 01B 1/22	EP 2322585	Adhesive composition, circuit connecting material and connecting structure of circuit member
H 01F 1/147	EP 2313895*	FE-CO ALLOY FOR HIGH DYNAMIC ELECTROMAGNETIC ACTUATOR
H 01L 21/02	EP 2166562	Method for forming a capacitor having a strontium/barium titanium oxide dielectric layer by means of ALD and memory device comprising such a capacitor
H 01L 21/306	EP 2319070*	PASSIVATION OF ALUMINUM NITRIDE SUBSTRATES
H 01L 21/314	EP 2166562	Method for forming a capacitor having a strontium/barium titanium oxide dielectric layer by means of ALD and memory device comprising such a capacitor
H 01L 21/314	EP 2319070*	PASSIVATION OF ALUMINUM NITRIDE SUBSTRATES
H 01L 21/316	EP 2166562	Method for forming a capacitor having a strontium/barium titanium oxide dielectric layer by means of ALD and memory device comprising such a capacitor
H 01L 21/60	EP 2322585	Adhesive composition, circuit connecting material and connecting structure of circuit member
H 01L 21/8242	EP 2166562	Method for forming a capacitor having a strontium/barium titanium oxide dielectric layer by means of ALD and memory device comprising such a capacitor
H 01L 23/10	EP 2079475*	A sealed photovoltaic apparatus
H 01L 25/00	EP 2319079*	SYSTEM AND METHOD FOR UTILITY POLE DISTRIBUTED SOLAR POWER GENERATION
H 01L 31/042	EP 2278627	Automatic localisation of photovoltaic modules in a photovoltaic field
H 01L 31/048	EP 2079475*	A sealed photovoltaic apparatus
H 01L 33/00	EP 2310175*	A METHOD FOR MANUFACTURING A LENS TO BE ADDED TO A LED, AND A LENS OBTAINED WITH THAT METHOD
H 01L 33/00	EP 2319070*	PASSIVATION OF ALUMINUM NITRIDE SUBSTRATES
H 01L 33/00	EP 2319096*	LED MODULE
H 01L 35/00	EP 2321859*	BATTERY CHARGER AND POWER SUPPLY

(51)	Број објаве европске пријаве патента	(51)
H 01L 41/047	EP 2306538	Piezoelectric assembly
H 01L 41/20	EP 2315634*	A MAGNETOSTRICTIVE ACTUATOR OF A MEDICAL ULTRASOUND TRANSDUCER ASSEMBLY, AND A MEDICAL ULTRASOUND HANDPIECE AND A MEDICAL ULTRASOUND SYSTEM HAVING SUCH ACTUATOR
H 01M 4/00	EP 2318130*	PROCESS FOR PRODUCING CARBON SUBSTRATES LOADED WITH METAL OXIDES AND CARBON SUBSTRATES PRODUCED IN THIS WAY
H 01M 4/04	EP 2303774*	INTERCALATION OF SILICON AND/OR TIN INTO POROUS CARBON SUBSTRATES
H 01M 4/08	EP 2303774*	INTERCALATION OF SILICON AND/OR TIN INTO POROUS CARBON SUBSTRATES
H 01M 4/38	EP 2303774*	INTERCALATION OF SILICON AND/OR TIN INTO POROUS CARBON SUBSTRATES
H 01M 4/58	EP 2303774*	INTERCALATION OF SILICON AND/OR TIN INTO POROUS CARBON SUBSTRATES
H 01Q 1/14	EP 2313943*	DISTRIBUTOR CONNECTION MODULE FOR TELECOMMUNICATIONS AND DATA TECHNOLOGY
H 01R 4/48	EP 2230724	Contact with optimised tension
H 01R 11/28	EP 2308137*	FEMALE, MALE ELECTRIC CONNECTOR AND ELECTRIC CONNECTION USING SUCH A FEMALE AND/OR MALE ELECTRIC CONNECTOR
H 01R 12/04	EP 2237378	Contact device
H 01R 12/22	EP 2230724	Contact with optimised tension
H 01R 12/22	EP 2237378	Contact device
H 01R 13/11	EP 2308137*	FEMALE, MALE ELECTRIC CONNECTOR AND ELECTRIC CONNECTION USING SUCH A FEMALE AND/OR MALE ELECTRIC CONNECTOR
H 01R 13/24	EP 2230724	Contact with optimised tension
H 01R 13/24	EP 2237378	Contact device
H 01R 13/33	EP 2237378	Contact device
H 01R 43/16	EP 2237378	Contact device
H 01T 4/06	EP 2308144*	SURGE ARRESTER
H 02B 1/38	EP 2316154*	HOUSING HAVING A BURGLAR-PROOF DOOR HINGE
H 02B 1/50	EP 2132843*	DISTRIBUTION CABINET COMPRISING A PLURALITY OF INNER BODIES
H 02G 15/013	EP 2045504	connecting piece for protective cable pipes
H 02G 15/113	EP 2045504	connecting piece for protective cable pipes
H 02J 3/00	EP 2297834*	SYNERGISTIC SYSTEM BETWEEN BATTERY CHARGER AND BATTERY
H 02J 7/00	EP 2297834*	SYNERGISTIC SYSTEM BETWEEN BATTERY CHARGER AND BATTERY
H 02J 7/00	EP 2321859*	BATTERY CHARGER AND POWER SUPPLY
H 02J 13/00	EP 2297834*	SYNERGISTIC SYSTEM BETWEEN BATTERY CHARGER AND BATTERY
H 03B 28/00	EP 2313969*	HIGHLY PRECISE AND LOW LEVEL SIGNAL-GENERATING DRIVERS, SYSTEMS AND METHODS OF USE
H 04L 5/00	EP 2321925*	TRANSMIT PSD CEILING IN PACKET-BASED OFDM SYSTEMS
H 04L 9/32	EP 2315549*	ANALYTE MEASUREMENT AND MANAGEMENT DEVICE AND ASSOCIATED METHODS
H 04L 12/56	EP 2200228	Method and system for forwarding of data packets
H 04L 29/06	EP 1986392	Method for route optimization between mobile entities
H 04M 1/247	EP 2119210*	VOICEMAIL SYSTEMS AND METHODS
H 04M 1/65	EP 2119210*	VOICEMAIL SYSTEMS AND METHODS
H 04M 1/725	EP 2116022*	VOICEMAIL SYSTEMS AND METHODS
H 04M 1/725	EP 2116023*	VOICEMAIL SYSTEMS AND METHODS
H 04M 1/725	EP 2306271	Electronic device including tactile touch-sensitive display and method of controlling same

(51)	Број објаве европске пријаве патента	(51)
H 04M 1/725	EP 2313820*	SYSTEMS AND METHODS FOR PHYSICS-BASED TACTILE MESSAGING
H 04M 3/533	EP 2116022*	VOICEMAIL SYSTEMS AND METHODS
H 04M 3/533	EP 2116023*	VOICEMAIL SYSTEMS AND METHODS
H 04M 3/537	EP 2119210*	VOICEMAIL SYSTEMS AND METHODS
H 04N 9/31	EP 2069865*	THREE-DIMENSIONAL INTERNAL BACK-PROJECTION SYSTEM AND METHOD FOR USING THE SAME
H 04Q 1/14	EP 2294831*	IMPROVEMENTS TO AN ACTUATOR MODULE DESIGNED FOR INTERCEPTING THE PAIRS OF METAL TELEPHONE CONDUCTORS ALREADY TERMINATED IN TELEPHONE EXCHANGES
H 04Q 7/38	EP 1968339	Apparatus and associated method for facilitating I-WLAN selection
H 04R 1/10	EP 2299730	EARPHONE
H 04R 9/00	EP 2302949	SPEAKER DEVICE
H 04R 9/02	EP 2302949	SPEAKER DEVICE
H 04R 9/04	EP 2302949	SPEAKER DEVICE
H 04W 4/00	EP 2321983*	A SYSTEM AND METHOD FOR IMPLEMENTING MESH NETWORK COMMUNICATIONS USING A MESH NETWORK PROTOCOL
H 04W 64/00	EP 2301289*	METHOD FOR CHECKING THE LOCATION OF A FEMTOCELL
H 05B 33/08	EP 2122840*	BACKLIGHT AND AMBIENT LIGHT SENSOR SYSTEM
H 05B 37/02	EP 2122840*	BACKLIGHT AND AMBIENT LIGHT SENSOR SYSTEM
H 05K 1/02	EP 2302985	LED assembly
H 05K 1/14	EP 2322585	Adhesive composition, circuit connecting material and connecting structure of circuit member
H 05K 5/06	EP 2321216*	METHOD AND DEVICE FOR ENCAPSULATING MICROSTRUCTURES

ОБЈАВА ПОВУЧЕНИХ ЗАХТЕВА ЗА ПРОШИРЕЊЕ ЕВРОПСКИХ ПРИЈАВА ПАТЕНАТА

(51) (8) **EP 2111734**
A 01B 33/08
(23) 20.10.2010.
(30) DE 25.04.2008. 102008020849
(96) EP 09005567.4 21.04.2009. De
(97) EP 2111734 28.10.2009. 200944 De
(41) 13.04.2011. 201115
(54) Power harrow
(71) Amazonen-Werke, H. Dreyer GmbH & Co. KG, Am Amazonenwerk 85, 49205 Hasbergen, DE
(72) Gieseke, Reinhard, Am Eichenwall 4, 27798 Hude, DE

(51) (8) **EP 2119335**
A 01C 17/00
(23) 03.11.2010.
(30) DE 14.05.2008. 102008023548
(96) EP 09006248.0 08.05.2009. De
(97) EP 2119335 18.11.2009. 200947 De
(41) 04.05.2011. 201118
(54) Centrifugal spreader
(71) Amazonen-Werke, H. Dreyer GmbH & Co. KG, Am Amazonenwerk 85, 49205 Hasbergen, DE
(72) Götzen, Nils, Wittrahmsweg 38, 470506 Neukirchen-Vluyn, DE;
Johannaber, Stefan Jan, Ellerhooksweg 18, 49536 Lienen, DE

(51) (8) **EP 1690442**
A 01C 23/04
B 01F 5/04
(23) 21.10.2010.
(30) DE 15.02.2005. 202005002496 U
(96) EP 05024257.7 08.11.2005. De
(97) EP 1690442 16.08.2006. 200633 De
(41) 04.05.2011. 201118
(54) Dosing unit for soil amendment or fertilizer products
(71) Tisatec GmbH, Stockstädter Strasse 7, 64560 Riedstadt, DE
(72) Prutzer, Hans-Joachim, Weingartenstrasse 61, 64569 Nauheim, DE;
Shaw, Peter, Veiglbergweg 3, 82544 Neufahrn, DE;
Simoneit, Manfred, Riegeläckerstrasse 11, 75365 Calw-Stammheim, DE
(74) KEIL & SCHAAFHAUSEN, Patentanwälte, Cronstettenstraße 66, 60322 Frankfurt am Main, DE

(51) (8) **EP 1773111 ***
A 01J 25/12
A 23C 19/06
(23) 19.10.2010.
(30) NZ 07.07.2004. 53397104
(86) PCT/NZ2005000159 07.07.2005.
(96) EP 05771196.2 07.07.2005. En
(87) WO2006004444 12.01.2006. 200602
(97) EP 1773111 18.04.2007. 200716 En
(41) 20.04.2011. 201116
(54) METHOD AND APPARATUS FOR PRODUCTING BLOCKS OF CHEESE
(71) MERCER STAINLESS LIMITED, Corbett Road, Bell Block, New Plymouth, NZ;
MURRAY GOULBURN CO-OPERATIVE CO LIMITED, 140 Dawson Street, Brunswick, 3056 Victoria, AU;
TETRA PAK TEBEL BV, 30 Zwettestraat, Leeuwarden, NL
(72) BRKOVIC, Rista, 20 Horace Street, 3144 Malvern, Victoria, AU;
CHANDLER, Aaron, 139 Dey Street, Hamilton, NZ;
DE KLERK, Christo, Andre, 11 Trotting Terrace, Albany, Auckland, NZ
(74) Fyles, Julie Marie, et al, Wynne-Jones, Lainé & James LLP, Essex Place, 22 Rodney Road, Cheltenham, Gloucestershire GL50 1JJ, GB

(51) (8) **EP 1871163 ***
A 01K 67/027
C 12N 15/85
G 01N 33/00
(23) 15.10.2010.
(30) US 06.06.2005. 687900 P
US 07.03.2006. 780262 P
(86) PCT/US2006019651 18.05.2006.
(96) EP 06770779.4 18.05.2006. En
(87) WO2006132788 14.12.2006. 200650
(97) EP 1871163 02.01.2008. 200801 En
(41) 06.04.2011. 201114
(54) TRANSGENIC MODELS FOR DIFFERENT GENES AND THEIR USE FOR GENE CHARACTERIZATION
(71) Genentech, Inc., 1 DNA Way, South San Francisco CA 94080-4990, US;
Lexicon Pharmaceuticals, Inc., 8800 Technology Forest Place, The Woodlands, TX 77381, US
(72) COMBS, Katherin, 52 Country Forest Court, Spring, TX 77380, US;
CULBERTSON, Ling Ling, 2434 Fox River Lane, Spring, TX 77386, US;
DESAUVAGE, Frederic, 187 Shooting Star Isle, Foster City, CA 94404, US;
DING, Zhiyong, 3807 Florentine Circle, Longmont, CO 80503, US;
EDWARDS, Joel, 62 North Goldenvine Circle, The Woodlands, TX 77382, US;
GIRGIS, Rosemary, 9914 Aldwell Court, Houston, TX 77064, US;
JUNGE, Harald, 1215 Bayswater Avenue 201, Burlingame, CA 94010, US;
JUNUTULA, Jagath Reddy, 34391 Tupelo Street, Fremont, CA 94555, US;
MASSEY, Erin Marie, 15000 Mansions View Drive, Apt. 2201, Conroe, TX 77384, US;
MCLAIN, Dina Rebecca, 5303 Hamilton Wolfe Road, Apt. 204, San Antonio, TX 78229, US;
MONTGOMERY, Charles A., P.O. Box 527, Jay, OK 74346, US;
PAYNE, Bobby Joe, 23 Acorn Cluster Court, The Woodlands, TX 77381, US;
PHILLIPS, Heidi, 1511 Walnut Drive, Palo Alto, CA 94303, US;
QIAN, Ni Nancy, 39 11778 Westview Parkway, Apt. 68, San Diego, CA 92126, US;
RANGEL, Carolina, 810 East 24th Street, Houston, TX 77009, US;
SHI, Zheng-Zheng, 53 Silver Crescent Court, The Woodlands, TX 77382, US;

SPARKS, Mary Jean, 7218 Black Forest Drive, Magnolia, TX 77354, US;
STALA, Joy, 2409 Clark Street nr. 313, Dallas, TX 75204, US;
VOGEL, Peter, 7 Graylin Woods Place, The Woodlands, TX 77382, US;
SEVAUX, Tracy, Ellen, Willis, 205 Lakeshore Drive, Conroe, TX 77304, US;
YE, Weilan, 119 Barkentine Street, Foster City, CA 94404, US;
HORNER, Allison, Ann, Byers, 433 Folk Crest Lane, Dickinson, TX 77539, US
(74) Denison, Christopher Marcus, Mewburn Ellis LLP, 33 Gutter Lane, London, EC2V 8AS, GB

(51) (8) **EP 1988769 ***
A 01N 1/00
A 01N 1/02
(23) 22.02.2011.
(30) US 10.02.2006. 772800 P
(86) PCT/US2007003708 12.02.2007.
(96) EP 07750539.4 12.02.2007. En
(87) WO2007095192 23.08.2007. 200734
(97) EP 1988769 12.11.2008. 200846 En
(41) 30.03.2011. 201113
(54) BIOREACTOR FOR ORGAN RECONSTRUCTION AND AUGMENTATION
(71) Tengion, Inc., 2900 Potshop Lane, Suite 100, East Norriton PA 19403, US
(72) BERTRAM, Timothy, A., 423 Torrington Lane, Winston-salem, NC 27104-5060, US;
BRUCE, Andrew, 315 Ridge Drive, Lexington, NC 27295-0839, US;
JAIN, Deepak, 559 Sun Creek drive, Winston-salem, NC 24104-2460, US;
LUDLOW, John, 100 Rivercreek Place, Carrboro, NC 27510-2536, US;
MCCOY, Carrell, 7047 Windrift Court, Clemmon, NC 27012-7523, US;
SANGHA, Namrata, 320 Stonebrook Lane, Winston-salem, NC 27104-5135, US
(74) Denison, Christopher Marcus, et al, Mewburn Ellis LLP, 33 Gutter Lane, London, EC2V 8AS, GB

(51) (8) **EP 1993358 ***
A 01N 37/36
A 01N 43/653
A 01N 47/24
A 01N 37/50
A 01N 43/54
(23) 17.11.2010.
(30) US 14.03.2006. 782242 P
(86) PCT/EP2007052074 06.03.2007.
(96) EP 07726642.7 06.03.2007. En
(87) WO2007104669 20.09.2007. 200738
(97) EP 1993358 26.11.2008. 200848 En
(41) 04.05.2011. 201118
(54) METHOD OF INDUCING VIRUS TOLERANCE OF PLANTS
(71) BASF SE, 67056 Ludwigshafen, DE
(72) KÖHLE, Harald, Am Büschel 13, 67273 Bobenheim, DE;
BARDINELLI, Ted, R., 6 Greystone Center, Durham, NC 27713, US;
TAVARES-RODRIGUES, Marco-Antonio, Lino de Almeida Pires, 282 apto 51, 04317-180 Jabaquara - Sao Paulo - Sao Paulo, BR

(51) (8) **EP 1956908 ***
A 01N 43/16
A 61K 31/35
(23) 01.07.2010.
(30) US 08.12.2005. 748753 P
US 29.06.2006. 817976 P
(86) PCT/US2006046913 07.12.2006.
(96) EP 06839225.7 07.12.2006. En
(87) WO2007067752 14.06.2007. 200724
(97) EP 1956908 20.08.2008. 200834 En
(41) 23.03.2011. 201112
(54) CERTAIN COMPOSITIONS AND METHODS OF TREATMENT
(71) Cytokinetics, Inc., 280 East Grand Avenue, South San Francisco, CA 94080, US
(72) WOOD, Kenneth W., c/o Cytokinetics, Inc., 280 East Grand Avenue, South San Francisco, California 94080, US;
BELMONT, Lisa, c/o Cytokinetics, Inc., 280 East Grand Avenue, South San Francisco, California 94080, US
(74) Marshall, Cameron John, et al, Carpmaels & Ransford, One Southampton Row, London, WC1B 5HA, GB

(51) (8) **EP 1973408 ***
A 01N 43/58
A 01N 43/64
A 01N 43/90
(23) 02.08.2010.
(30) US 04.01.2006. 755860 P
(86) PCT/US2007000045 04.01.2007.
(96) EP 07716220.4 04.01.2007. En
(87) WO2007081690 19.07.2007. 200729
(97) EP 1973408 01.10.2008. 200840 En
(41) 06.04.2011. 201114
(54) INHIBITORS OF PROTEIN KINASES
(71) Locus Pharmaceuticals, Inc., Four Valley Square, 512 Township Line Road, Blue Bell, PA 19422, US
(72) MICHELOTTI, Enrique, Luis, 1316 Highland Avenue, Fort Washington, PA 19034, US;
MOORE, William, R. Jr., 280 Stonegate Drive, DeVON, PA 19333, US;
SPRINGMAN, Eric, Bruce, 2310 Sienna Drive, East Norriton, PA 19401, US
(74) Ouzman, Beverley Nicola Claire, et al, Murgitroyd & Company, Scotland House, 165-169 Scotland Street, Glasgow G5 8PL, GB

(51) (7) **EP 1725106 ***
A 01N 47/38
(23) 01.09.2010.
(30) DE 05.03.2004. 102004010812
(86) PCT/EP2005001735 19.02.2005.
(96) EP 05715411.4 19.02.2005. De
(87) WO2005087006 22.09.2005. 200538
(97) EP 1725106 29.11.2006. 200648 De
(41) 16.03.2011. 201111
(54) METHOD FOR COMBATING WEEDS
(71) Bayer CropScience AG, Alfred-Nobel-Straße 50, 40789 Monheim, DE

(72) DOLLINGER, Markus, 16 rue Jean-Marie Leclair, F-69009 Lyon, FR;
TOP, Frederic, 20 Chemin du Tison, 69250 ALBIGNY, FR;
GESING, Ernst, Rudolf, Trillser Graben 4, 40699 Erkrath, DE;
HACKER, Erwin, Margarethenstrasse 16, 65239 Hochheim, DE
(74) Schwenk, Norbert, et al, Bayer CropScience AG, Patent- und Lizenzabteilung, Industriepark Hoechst, Gebäude K 607, 65926 Frankfurt am Main, DE

(51) (8) **EP 1968563** *
A 01N 55/00
A 61K 31/695
A 61K 31/65
A 61P 9/12
A 61P 3/10
A 61P 19/02
A 61P 25/02
(23) 23.11.2010.
(30) US 20.12.2005. 752935 P
(86) PCT/US2006048716 20.12.2006.
(96) EP 06845933.8 20.12.2006. En
(87) WO2007075849 05.07.2007. 200727
(97) EP 1968563 17.09.2008. 200838 En
(41) 11.05.2011. 201119
(54) TREATMENT METHODS USING TRIARYL METHANE COMPOUNDS
(71) Icagen, Inc., Suite 350, 4222 Emperor Boulevard, Durham, NC 27703, US
(72) CASTLE, Neil, A., 601 Barret Manor Ct., Cary, NC 27513, US;
RIGDON, Gregory, C., 2303 Fletchers Chapel Road, Durham, NC 27704, US;
KRAFTE, Douglas, S., 106 Gateridge Place, Carrboro, NC 27510, US
(74) Harrison Goddard Foote, Belgrave Hall, Belgrave Street, Leeds, LS2 8DD, GB

(51) (7) **EP 1744794** *
A 01N 63/00
A 01N 65/00
A 61K 35/60
A 61F 2/00
(23) 02.10.2010.
(30) US 05.03.2004. 550809 P
(86) PCT/US2005007010 04.03.2005.
(96) EP 05724534.2 04.03.2005. En
(87) WO2005089127 29.09.2005. 200539
(97) EP 1744794 24.01.2007. 200704 En
(41) 06.04.2011. 201114
(54) POLYMER-CERAMIC-HYDROGEL COMPOSITE SCAFFOLD FOR OSTEOCHONDRAL REPAIR
(71) The Trustees of Columbia University in the City of, New York, West 116th Street and Broadway, New York, New York 10027, US
(72) LU, Helen, H., 180 Riverside Blvd., Apt. 19C, New York, NY 10069, US;
JIANG, Jie, 523 West 112th Street, Apt. 32B, New York, NY 10025, US;
HUNG, Clark, T., 35 Sheffield Ct., Ardsley, NY 10502, US;
GUO, Edward, X., 560 Riverside Drive, Apt. 5J, New York, NY 10027, US;
ATESHIAN, Gerard, 440 Riverside Drive. Apt. 23, New York, NY 10027, US
(74) Peters, Hajo, et al, Graf von Stosch, Patentanwaltsgesellschaft mbH, Prinzregentenstrasse 22, 80538 München, DE

(51) (8) **EP 1683421**
A 21C 3/02
(23) 14.09.2010.
(30) IT 21.01.2005. TO20050031
(96) EP 06100408.1 16.01.2006. It
(97) EP 1683421 26.07.2006. 200630 En
(41) 30.03.2011. 201113
(54) Mechanism for preparing puff pastry conveyed on a belt
(71) Minipan S.r.l., Via Trebeghino 47, 48024 Massa Lombarda RA, IT
(72) Fusari, Bruno, Largo Martini, 16, 48012, Bagnacavallo (RA), IT;
Zaffagnini, Bruno, Via Tagliata, 4, 48017, Conselice (RA), IT
(74) Mittler, Enrico, et al, Mittler & C. S.r.l., Viale Lombardia, 20, 20131 Milano, IT

(51) (8) **EP 1996026** *
A 22B 3/00
A 61D 7/04
(23) 01.10.2010.
(30) GB 21.03.2006. 0605679
(86) PCT/GB2007000943 16.03.2007.
(96) EP 07712928.6 16.03.2007. En
(87) WO2007107718 27.09.2007. 200739
(97) EP 1996026 03.12.2008. 200849 En
(41) 06.04.2011. 201114
(54) ANIMAL ASPHYXIATION DEVICE
(71) Secretary of State, for Environment Food and Rural Affairs, 3 to 8 Whitehall Place, London SW1A 2HH, GB
(72) MORRISH, Ivor, Department for Environment Food & Ruraral Affairs, 3 to 8 Whitehall Place, London SW1A 2HH, GB;
BECKETT, David, Department for Environment Food & Ruraral Affairs, 3 to 8 Whitehall Place, London SW1A 2HH, GB
(74) Wallis, Naomi Rachel, et al, Withers & Rogers LLP, Goldings House, 2 Hays Lane, London, SE1 2HW, GB

(51) (8) **EP 2145548**
A 23L 1/317
A 23L 1/01
(23) 10.12.2010.
(96) EP 08012839.0 16.07.2008. De
(97) EP 2145548 20.01.2010. 201003 De
(41) 20.04.2011. 201116
(54) Method for holding and treating sausage meat in a container
(71) ARTA PLAST AB, Antennvägen 1a, 135 48 Tyresö, SE
(72) Steg, Helge, Sveavägen 81, 113 50 Stockholm, SE
(74) Niedmers, Ole, Patentanwälte, Niedmers Jaeger Köster, Van-der-Smissen-Strasse 3, 22767 Hamburg, DE

(51) (8) **EP 2143345**
A 24D 1/02
B 31F 1/07
B 41M 3/10
A 24C 5/00
(23) 23.09.2010.
(96) EP 08012387.0 09.07.2008. En
(97) EP 2143345 13.01.2010. 201002 En
(41) 30.03.2011. 201113
(54) Cigarette paper
(71) Reemtsma Cigarettenfabriken GmbH, Max-Born-Straße 4, 22761 Hamburg, DE
(72) Eyckmans, Stefaan, 49 G. Peetersstraat, 2520 Broechem, BE
(74) UEXKÜLL & STOLBERG, Patentanwälte, Beselerstrasse 4, 22607 Hamburg, DE

(51) (7) **EP 1737312 ***
A 44C 27/00
D 06M 11/83
(23) 03.11.2010.
(30) IT 23.04.2004. RM20040205
(86) PCT/IT2005000216 14.04.2005.
(96) EP 05734927.6 14.04.2005. En
(87) WO2005102095 03.11.2005. 200544
(97) EP 1737312 03.01.2007. 200701 En
(41) 20.04.2011. 201116
(54) METHOD FOR MANUFACTURING A YARN OF PRECIOUS METAL, APPARATUS, COMPOSITE YARN AND FRAME
(71) Busi, Mauro, Via Carini 106, 25082 Botticino Sera, IT; Ciocca, Claudio, Via Leonardo da Vinci 27, 25080 Padenghe, IT
(72) Busi, Mauro, Via Carini 106, 25082 Botticino Sera, IT; Ciocca, Claudio, Via Leonardo da Vinci 27, 25080 Padenghe, IT
(74) Crippa, Paolo Ernesto, et al, Jacobacci & Partners S.p.A., Piazza della Vittoria 11, 25122 Brescia, IT

(51) (7) **EP 1732413 ***
A 47B 91/02
(23) 01.10.2010.
(30) GB 12.03.2004. 0405639
(86) PCT/GB2005001127 11.03.2005.
(96) EP 05718109.1 11.03.2005. En
(87) WO2005087049 22.09.2005. 200538
(97) EP 1732413 20.12.2006. 200651 En
(41) 11.05.2011. 201119
(54) POSITION ADJUSTMENT APPARATUS
(71) Halstead, Roger Geoffrey, 97 Towncort Lane, Pettswood, Orpington, Kent BR5 1EL, GB
(72) Halstead, Roger Geoffrey, 97 Towncort Lane, Pettswood, Orpington, Kent BR5 1EL, GB

(51) (8) **EP 2130461**
A 47G 9/10
(23) 23.11.2010.
(30) SI 04.06.2008. 200800146
(96) EP 08468013.1 04.12.2008. Sl
(97) EP 2130461 09.12.2009. 200950 En
(41) 18.05.2011. 201120
(54) Pillow with hardness and height adjustment
(71) Maremico, d.o.o., Dunajska 120, 1000 Ljubljana, SI
(72) Marinsek, Tine, Psata 68a, 1262 Dol Pri Ljubljani, SI; Marinsek, Emil, Slovenska c. 87, 1234 Menges, SI
(74) Pipan, Marjan, Kotnikova ulica 5, 1000 Ljubljana, SI

(51) (8) **EP 1656869**
A 47K 10/38
(23) 22.09.2010.
(30) US 12.11.2004. 627071 P
US 14.06.2005. 690273 P
US 09.11.2005. 270005 P
(96) EP 05024560.4 10.11.2005. En
(97) EP 1656869 17.05.2006. 200620 En
(41) 06.04.2011. 201114
(54) Tissue roll dispenser
(71) Georgia-Pacific Consumer Products LP, 133 Peachtree Street, N.E., Atlanta GA 30303, US
(72) Goeking, Harold J., 2857 Ruschfield, Oshkosh, Wisconsin 54904, US;
Budz, Gregory D., 1109 Hilbert Road, Sobieski, Wisconsin 54171, US;
Kilgore, Michael R., 4320 Geano Beach Road, Little Suamico, Wisconsin 54141, US;
Kissinger, Karl D., 1321 S. Alicia Drive, Appleton, Wisconsin 54914, US;
Kirkpatrick, Andy L., 2289 Samantha Street 24, De Pere, Wisconsin 54115, US;
Moody, John R., 159 Brady Lane, Winlock, Washington 98596, US
(74) Grünecker, Kinkeldey, Stockmair & Schwanhäusser, Anwaltssozietät, Leopoldstrasse 4, 80802 München, DE

(51) (8) **EP 1879489 ***
A 47K 13/10
(23) 19.11.2010.
(30) IT 19.04.2005. VR20050047
(86) PCT/IB2006001091 12.04.2006.
(96) EP 06744616.1 12.04.2006. En
(87) WO2006111855 26.10.2006. 200643
(97) EP 1879489 23.01.2008. 200804 En
(41) 18.05.2011. 201120
(54) DEVICE FOR RAISING AND LOWERING WATER CLOSET SEATS AND COVERS
(71) Bianchi, Stefano, Via Calzoni, 64, 37064 Dossobuono di Villafranca, IT;
Gentili, Francesco, Via Usodimare Antoniotto, 5/A, 37137 Verona, IT;
Galzenati, Massimo, Via Porta San Zeon, 15, 37123 Verona, IT
(72) Bianchi, Stefano, Via Calzoni, 64, 37064 Dossobuono di Villafranca, IT;
Gentili, Francesco, Via Usodimare Antoniotto, 5/A, 37137 Verona, IT;
Galzenati, Massimo, Via Porta San Zeon, 15, 37123 Verona, IT
(74) Crippa, Paolo Ernesto, et al, Jacobacci & Partners S.p.A., Via Berchet 9, 35131 Padova, IT

(51) (7) **EP 1742558 ***
A 47L 9/12
A 47L 9/16
(23) 18.11.2010.
(30) US 17.03.2004. 802389
(86) PCT/US2005008707 16.03.2005.

(96) EP 05728272.5 16.03.2005. En
(87) WO2005089615 29.09.2005. 200539
(97) EP 1742558 17.01.2007. 200703 En
(41) 11.05.2011. 201119
(54) LIGHT WEIGHT BAGLESS VACUUM CLEANER
(71) Euro-Pro Operating, LLC, 1210 Washington Street, West Newton, MA 02465, US
(72) GREENE, Mason, 1950 Canary Drive, Aubum, AL 36830, US;
ROSENZWEIG, Mark, 55 Single Tree Road, Chestnut Hill, MA 02467, US
(74) Stephen, Robert John, et al, Olswang LLP, 90 High Holborn, London WC1V 6XX, GB

(51) (7) **EP 1740094 ***
A 61B 5/055
A 61B 10/00
C 07B 47/00
A 61K 31/555
A 61K 31/40
C 07D 487/22
C 07F 13/00
C 07F 15/02
(23) 19.10.2010.
(30) US 29.03.2004. 557551 P
US 16.11.2004. 628465 P
(86) PCT/US2005010167 25.03.2005.
(96) EP 05732040.0 25.03.2005. En
(87) WO2005097123 20.10.2005. 200542
(97) EP 1740094 10.01.2007. 200702 En
(41) 20.04.2011. 201116
(54) PYRIDYL-SUBSTITUTED PORPHYRIN COMPOUNDS AND METHODS OF USE THEREOF
(71) Inotek Pharmaceuticals Corporation, 100 Cummings Center, Suite 412G, Beverly, MA 01915, US
(72) WILLIAMS, William, 14 Newmarch Street, Ipswich, MA 01928, US;
SOUTHAN, Garry, 295 Lynn Shore Drive, Unit 308, Lynn, MA 01902, US;
SZABO, Csaba, Nap utca, IV.11, Budapest, H-1082, HU
(74) Maiwald, Walter, et al, Maiwald Patentanwalts GmbH, Elisenhof, Elisenstrasse 3, 80335 München, DE

(51) (8) **EP 1806099**
A 61B 8/08
(23) 15.09.2010.
(30) JP 19.10.2004. 2004303872
(86) PCT/JP2005019088 18.10.2005.
(96) EP 05795508.0 18.10.2005. Ja
(87) WO2006043528 27.04.2006. 200617
(97) EP 1806099 11.07.2007. 200728 En
(41) 16.03.2011. 201111
(54) ULTRASONOGRAPHIC DEVICE AND ULTRASONOGRAPHIC DEVICE CONTROL METHOD
(71) Panasonic Corporation, 1006, Oaza Kadoma, Kadoma-shi, Osaka 571-8501, JP
(72) KATO, Makoto, Matsushita Electric Industrial Co., Ltd, I.P.R.O.C., IP Development Center, 19F Matsushita IMP Bldg.3-7, Shirumi 1-chome, Chou-Ku, Osaka-shi Osaka 5406319, JP;
HAGIWARA, Hisashi, Matsushita Electric Industrial Co., Ltd, I.P.R.O.C., IP Development Center, 19F Matsushita IMP Bldg.3-7, Shirumi 1-chome, Chou-Ku, Osaka-shi Osaka 5406319, JP;
TANNAKA, Yoshinao, Matsushita Electric Industrial Co., Ltd, I.P.R.O.C., IP Development Center, 19F Matsushita IMP Bldg.3-7, Shirumi 1-chome, Chou-Ku, Osaka-shi Osaka 5406319, JP
(74) Grünecker, Kinkeldey, Stockmair & Schwanhäusser, Anwaltssozietät, Leopoldstrasse 4, 80802 München, DE

(51) (7) **EP 1740109 ***
A 61B 17/56
A 61F 5/00
A 61F 2/44
(23) 09.02.2011.
(30) US 12.04.2004. 822599
(86) PCT/US2005012115 11.04.2005.
(96) EP 05732935.1 11.04.2005. En
(87) WO2005099602 27.10.2005. 200543
(97) EP 1740109 10.01.2007. 200702 En
(41) 23.03.2011. 201112
(54) ROD PERSUADER
(71) Synthes GmbH, Eimattstrasse 3, 4436 Oberdorf, CH
(72) KEYER, Thomas, R., 583 Normandy Ct., West Chester, PA 19382-5549, US;
BINDER, Larry, 5025 Sundance court, Doylestown, PA 18901, US;
WALTHER, Martin, 153, rue de General De Segur, F-77810 Thomery, FR
(74) Klunker . Schmitt-Nilson . Hirsch, Patentanwälte, Destouchesstrasse 68, 80796 München, DE

(51) (8) **EP 1998707 ***
A 61C 9/00
(23) 01.10.2010.
(30) US 08.03.2006. 780133 P
US 01.03.2007. 680992
(86) PCT/US2007063443 07.03.2007.
(96) EP 07758032.2 07.03.2007. En
(87) WO2007103954 13.09.2007. 200737
(97) EP 1998707 10.12.2008. 200850 En
(41) 23.03.2011. 201112
(54) DENTAL IMPRESSION TRAY AND METHOD
(71) Global Dental Impression Trays, Inc., Suite 300, 2651 East 21st Street, Tulsa, OK 74114, US
(72) MASSAD, Joseph, J., 2651 East 21st Street, Suite 300, Tulsa, OK 74114, US
(74) Vogeser, Werner, Hansmann & Vogeser, Patent- und Rechtsanwälte, Albert-Rosshaupter-Strasse 65, 81369 München, DE

(51) (8) **EP 1928366 ***
A 61F 2/46
A 61F 2/44
(23) 04.03.2011.
(30) US 26.09.2005. 236323
(86) PCT/US2006036969 22.09.2006.
(96) EP 06815178.6 22.09.2006. En
(87) WO2007038261 05.04.2007. 200714
(97) EP 1928366 11.06.2008. 200824 En
(41) 13.04.2011. 201115
(54) IMPLANTABLE ORTHOPEDIC DEVICE COMPONENT SELECTION INSTRUMENT AND METHODS

(71) FSI Acquisition Sub, LLC, 45 South Street, Hopkinton MA 01748, US
(72) FUNK, Michael J., 47562 Southeast 162nd St., North Bend, WA 98045, US;
McLEER, Thoma, J., 23913 NE 69th Place, Redmond, WA 98053, US;
AUGOSTINO, Teena M., 15719 NE 136th Place, Redmond, WA 98052, US;
BROMAN, Richard J., 25422 137th Street SE, Monroe, WA 98272, US;
TOKISH, JR., Leonard J., 24817 SE 38th Street, Issaquah, WA 98029, US
(74) Dee, Ian Mark, Potter Clarkson LLP, Park View House, 58 The Ropewalk, Nottingham, NG1 5DD, GB

(51) (8) **EP 2164443** *
A 61H 37/00
A 61H 7/00
(23) 05.10.2010.
(30) FR 25.06.2007. 0756011
(86) PCT/FR2008051148 25.06.2008.
(96) EP 08806080.1 25.06.2008. Fr
(87) WO2009007597 15.01.2009. 200903
(97) EP 2164443 24.03.2010. 201012 Fr
(41) 06.04.2011. 201114
(54) Massage device
(71) Dreamtouch, 8 rue Daguerre, 75014 Paris, FR
(72) CRISAN, Antoine, 72 Boulevard Desgranges, F-92330 Sceaux, FR
(74) Pontet, Bernard, Pontet Allano & Associés, 25, Rue Jean Rostand, Parc Club Orsay Université, 91893 Orsay Cedex, FR

(51) (8) **EP 2097057** *
A 61J 1/03
(23) 14.09.2010.
(30) US 22.12.2006. 871601 P
(86) PCT/US2007026098 20.12.2007.
(96) EP 07867903.2 20.12.2007. En
(87) WO2008079306 03.07.2008. 200827
(97) EP 2097057 09.09.2009. 200937 En
(41) 23.03.2011. 201112
(54) PHARMACEUTICAL PACKAGING SYSTEMS FOR IMPROVED PATIENT COMPLIANCE
(71) Schering Corporation, 2000 Galloping Hill Road, Kenilworth, NJ 07033, US
(72) KWOK, Yik Kit, 201 Grantham Drive, Somerset, NJ 08873, US
(74) Broekkamp, Chris L. E., et al, P.O. Box 20, 5340 BH Oss, NL

(51) (8) **EP 2100583**
A 61K 8/06
A 61K 8/04
A 61K 8/49
A 61Q 1/02
A 61K 8/40
A 61K 8/895
A 61K 8/891
(23) 09.02.2011.
(30) DE 10.03.2008. 102008013805
(96) EP 09151924.9 03.02.2009. De
(97) EP 2100583 16.09.2009. 200938 De
(41) 23.03.2011. 201112
(54) Foundation with particular organic light filter
(71) Beiersdorf AG, Unnastraße 48, 20253 Hamburg, DE
(72) Riedel, Heidi, Bachstrasse 137, 22083, Hamburg, DE; Skubsch, Kerstin, Hermanstraße 30, 25421, Pinneberg, DE; Münchow, Lynn, Jevenstedter Straße 69 B, 22547, Hamburg, DE

(51) (8) **EP 1952797**
A 61K 8/44
A 61Q 19/08
(23) 17.11.2010.
(30) DE 24.01.2007. 102007003582
(96) EP 08001348.5 24.01.2008. De
(97) EP 1952797 06.08.2008. 200832 De
(41) 11.05.2011. 201119
(54) Use of a cosmetic composition comprising NMDA receptor agonists for cosmetic skin treatment
(71) Dr. August Wolff GmbH & Co. KG Arzneimittel, Sudbrackstrasse 56, 33611 Bielefeld, DE
(72) Fischer, Matthias, Agnes-Gosche-Strasse 44, 06120 Halle, DE
(74) Grünecker, Kinkeldey, Stockmair & Schwanhäusser, Anwaltssozietät, Leopoldstrasse 4, 80802 München, DE

(51) (7) **EP 1778181** *
A 61K 8/92
A 61K 8/97
A 61K 8/98
A 61Q 5/00
A 61Q 7/00
(23) 08.01.2011.
(30) IT 07.04.2004. RM20040177
(86) PCT/IT2005000196 07.04.2005.
(96) EP 05734974.8 07.04.2005. En
(87) WO2005097049 20.10.2005. 200542
(97) EP 1778181 02.05.2007. 200718 En
(41) 16.03.2011. 201111
(54) COSMETIC MIXTURE FOR HAIR
(71) SOULIMANI, Atika, I-98070 Acquedolci, IT
(72) SOULIMANI, Atika, I-98070 Acquedolci, IT
(74) Scarfone, Maria Adelaide, et al, Studio Rubino S.A.S., Via Lucrezia della Valle, 84, 88100 Catanzaro (CZ), IT

(51) (7) **EP 1720519** *
A 61K 9/00
(23) 01.10.2010.
(30) US 04.03.2004. 550020 P
US 15.06.2004. 580140 P
(86) PCT/US2005006872 04.03.2005.
(96) EP 05724417.0 04.03.2005. En
(87) WO2005089712 29.09.2005. 200539
(97) EP 1720519 15.11.2006. 200646 En
(41) 04.05.2011. 201118
(54) LYOPHILIZATION METHOD TO IMPROVE EXCIPIENT CRYSTALLIZATION
(71) Wyeth LLC, Five Giralda Farms, Madison, NJ 07940, US
(72) JUNEAU, Jennifer, 8 Pamela Lane, Sterling, MA 01564, US;
KNOWLES, Susan, 31 Fairmount Street, Melrose, MA 02176, US
(74) Talbott, Dawn Jacqueline, et al, Wyeth Pharmaceuticals, Huntercombe Lane South, Taplow, Maidenhead, Berkshire SL6 0PH, GB

(51) [8] **EP 2039349**
A 61K 9/00
A 61K 9/20
A 61K 31/445
C 07D 211/32
(23) 11.09.2010.
(30) DE 19.10.2004. 102004051055
(96) EP 08020395.3 19.10.2005. En
(97) EP 2039349 25.03.2009. 200913 En
(41) 16.03.2011. 201111
(54) Solid pharmaceutical composition comprising donepezil hydrochloride
(71) KRKA, tovarna zdravil, d.d., Novo mesto, Smarjeska cesta 6, 8501 Novo mesto, SI
(72) Vrbinc, Miha, Gotna vas 20, 8000 Novo mesto, SI;
Kotar-Jordan, Berta, Vodeniska 19, 8311 Kostanjevica na Krki, SI;
Zupet, Rok, Janeza Rozica 6, 1211 Ljubljana, SI;
Smrkolj, Matej, Cesta OF 42, 1420 Trbovlje, SI
(74) UEXKÜLL & STOLBERG, Patentanwälte, Beselerstrasse 4, 22607 Hamburg, DE

---

(51) [7] **EP 1715849** *
A 61K 9/12
A 61K 31/4704
A 61M 15/00
B 65D 83/14
(23) 06.11.2010.
(30) US 27.02.2004. 547798 P
EP 13.05.2004. 04011424
(86) PCT/EP2005002042 25.02.2005.
(96) EP 05707641.6 25.02.2005. En
(87) WO2005084640 15.09.2005. 200537
(97) EP 1715849 02.11.2006. 200644 En
(41) 27.04.2011. 201117
(54) STABLE PHARMACEUTICAL SOLUTION FORMULATION FOR PRESSURIZED METERED DOSE INHALERS
(71) CHIESI FARMACEUTICI S.p.A., Via Palermo, 26/A, 43100 Parma, IT
(72) LEWIS, David, Chiesi Farmaceutici S.p.A., Via Palermo 26/A, 43100 Parma, IT;
GANDERTON, David, Chiesi Farmaceutici S.p.A., Via Palermo 26/A, 43100 Parma, IT;
MEAKIN, Brian, Chiesi Farmaceutici S.p.A., Via Palermo 26/A, 43100 Parma, IT;
DELCANALE, Maurizio, Chiesi Farmaceutici S.p.A., Via Palermo 26/A, 43100 Parma, IT;
PIVETTI, Fausto, Chiesi Farmaceutici S.p.A., Via Palermo 26/A, 43100 Parma, IT
(74) Adam, Holger, et al, Kraus & Weisert, Patent- und Rechtsanwälte, Thomas-Wimmer-Ring 15, 80539 München, DE

---

(51) [7] **EP 1737426** *
A 61K 9/127
(23) 03.11.2010.
(30) AT 22.04.2004. 6962004
(86) PCT/AT2005000138 21.04.2005.
(96) EP 05731917.0 21.04.2005. De
(87) WO2005102268 03.11.2005. 200544
(97) EP 1737426 03.01.2007. 200701 De
(41) 27.04.2011. 201117
(54) CHOLINESTERASE INHIBITORS IN LIPOSOMES AND THEIR PRODUCTION AND USE
(71) Sanochemia Pharmazeutika AG, Boltzmanngasse 11, 1090 Wien, AT
(72) BODENTEICH, Angelika, Schopenhauerstrasse 47/7, A-1180 Wien, AT;
BÖCKMANN, Josef, DR. Ludwig Riegerstrasse 4/4, A-2340 Mödling, AT;
FRANTSITS, Werner, Nothartgasse 19, A-1130 Wien, AT;
PIRICH, Eberhard, Felix Mottlstrasse 32, A-1190 Wien, AT;
VORAUER-UHL, Karola, Rosenbergstrasse 58/Top 17, A-1220 Wien, AT
(74) Dungler, Karin, et al, Beer & Partner Patentanwälte KEG, Lindengasse 8, 1070 Wien, AT

---

(51) [8] **EP 2190411** *
A 61K 9/127
A 61K 31/69
A 61K 41/00
A 61K 47/48
(23) 31.08.2010.
(30) US 21.08.2007. 957045 P
(86) PCT/US2008073840 21.08.2008.
(96) EP 08798353.2 21.08.2008. En
(87) WO2009026427 26.02.2009. 200909
(97) EP 2190411 02.06.2010. 201022 En
(41) 30.03.2011. 201113
(54) LIPOSOME COMPOSITIONS FOR IN VIVO ADMINISTRATION OF BORONIC ACID COMPOUNDS
(71) Alza Corporation, 700 Eubanks Drive, Vacaville, CA 95688, US
(72) ZHANG, Yuanpeng, 21837 Monte Court, Cupertino, California 95014, US;
HUANG, Anthony, 12150 Viewoak Drive, Saratoga, CA 95070, US;
LUO, Bing, 44549 Mesquite Court, Fremont, CA 94539, US;
WANG, Jinkang, 39 Inverness Drive, San Francisco, CA 94132, US
(74) Williams, Paul Edwin, et al, Ablett & Stebbing, Caparo House, 101-103 Baker Street, London W1U 6FQ, GB

---

(51) [8] **EP 2190412** *
A 61K 9/127
A 61K 31/69
A 61K 41/00
A 61K 47/48
(23) 31.08.2010.
(30) US 21.08.2007. 957049 P
(86) PCT/US2008073844 21.08.2008.
(96) EP 08798357.3 21.08.2008. En
(87) WO2009026430 26.02.2009. 200909
(97) EP 2190412 02.06.2010. 201022 En
(41) 16.03.2011. 201111
(54) LIPOSOME FORMULATIONS OF BORONIC ACID COMPOUNDS
(71) Alza Corporation, 700 Eubanks Drive, Vacaville, CA 95688, US
(72) ZHANG, Yuanpeng, 21837 Monte Court, Cupertino, California 95014, US;
HUANG, Anthony, 12150 Viewoak Drive, Saratoga, CA 95070, US;
LUO, Bing, 44549 Mesquite Court, Fremont, CA 94539, US;

WANG, Jinkang, 39 Inverness Drive, San Francisco, CA 94132, US
(74) Williams, Paul Edwin, et al, Ablett & Stebbing, Caparo House, 101-103 Baker Street, London W1U 6FQ, GB

(51) (7) **EP 1732514 ***
A 61K 9/14
A 61K 31/34
A 61P 25/24
(23) 23.11.2010.
(30) DK 05.03.2004. 200400382
US 05.03.2004. 550909 P
(86) PCT/DK2005000115 21.02.2005.
(96) EP 05706777.9 21.02.2005. En
(87) WO2005084643 15.09.2005. 200537
(97) EP 1732514 20.12.2006. 200651 En
(41) 18.05.2011. 201120
(54) CRYSTALLINE COMPOSITION CONTAINING ESCITALOPRAM OXALATE
(71) H. Lundbeck A/S, 9, Ottiliavej, 2500 Copenhagen, DK
(72) JENSEN, Kim Bojstrup, Nordre Frihavnsgade 22, 2th, DK-2100 Copenhagen, DK;
HUMBLE, Rikke Eva, AEblevej 9, DK-2400 Copenhagen, DK;
LILJEGREN, Ken, Langkaer Vaenge 10, DK-3500 Vaerlose, DK;
CHRISTENSEN, Troels Volsgaard, Riffelhavevej 15, DK-4300 Holb k, DK
(74) Meidahl Petersen, John, et al, c/o H. Lundbeck A/S, 9, Ottiliavej, 2500 Copenhagen, DK

(51) (7) **EP 1729737 ***
A 61K 9/20
A 61K 31/55
C 07D 223/00
A 61P 25/18
A 61P 25/24
(23) 01.10.2010.
(30) GB 22.03.2004. 0406381
GB 25.03.2004. 0406737
(86) PCT/EP2005002987 21.03.2005.
(96) EP 05716260.4 21.03.2005. En
(87) WO2005092290 06.10.2005. 200540
(97) EP 1729737 13.12.2006. 200650 En
(41) 20.04.2011. 201116
(54) DISINTEGRATING TABLETS COMPRISING LICARBAZEPINE
(71) Novartis AG, Lichtstrasse 35, 4056 Basel, CH;
Novartis Pharma GmbH, Brunner Strasse 59, 1230 Wien, AT
(72) KALB, Oskar, Belchenstrasse 9, 79539 Lörrach, DE;
WOLF, Marie-Christine, 43, rue du Rhin, 68300 St. Louis, FR
(74) Harrison Goddard Foote, Belgrave Hall, Belgrave Street, Leeds, LS2 8DD, GB

(51) (8) **EP 2146699 ***
A 61K 9/20
A 61K 31/55
(23) 29.09.2010.
(30) IN 23.05.2007. CH10782007
(86) PCT/EP2008003814 13.05.2008.
(96) EP 08758478.5 13.05.2008. En
(87) WO2008141751 27.11.2008. 200848
(97) EP 2146699 27.01.2010. 201004 En
(41) 30.03.2011. 201113
(54) PHARMACEUTICAL COMPOSITIONS COMPRISING OXCARBAZEPINE
(71) Ratiopharm GmbH, Graf-Arco-Strasse 3, 89079 Ulm, DE
(72) DHONDE, Satish, G., New Mondha, At/post.-Loha, Dist-Nanded 431 708, Maharashtra, IN;
GAT, Ganesh, V., 61/5 United western CHS, Karvenager "Godavari", Pune 411 052, Maharashtra, IN;
HUSSAIN, Jawed, Hussain Villa, Plot No. 8, N-8, Sector C-3, CIDCO, Azad Chowk, Aurangabad 431 003, Maharashtra, IN
(74) Teipel, Stephan, et al, Lederer & Keller, Patentanwälte, Prinzregentenstrasse 16, 80538 München, DE

(51) (8) **EP 2190417 ***
A 61K 9/20
A 61K 9/50
A 61K 31/00
A 61K 31/4439
A 61K 31/64
(23) 19.11.2010.
(30) US 26.03.2008. 39691 P
(86) PCT/US2009038365 26.03.2009.
(96) EP 09725377.7 26.03.2009. En
(87) WO2009120844 01.10.2009. 200940
(97) EP 2190417 02.06.2010. 201022 En
(41) 11.05.2011. 201119
(54) PHARMACEUTICAL COMPOSITIONS COMPRISING INSULIN SENSITIZER AND INSULIN SECRETAGOGUE
(71) Teva Pharmaceutical Industries Ltd., 5 Basel Street, P.O. Box 3190, 49131 Petah Tiqva, IL
(72) KANARI, Itamar, Ha'eshel St. 3/4, 44235 Kefar Sava, IL;
LIEBOVICI, Minutza, 3/1 Gershon Shatz Street, 42312 Netanya, IL;
FOX, Michael, Machal St. 62, 67291 Tel Aviv, IL
(74) Lumsden, Stuart Edward Henry, D Young & Co LLP, 120 Holborn, London EC1N 2DY, GB

(51) (7) **EP 1734939 ***
A 61K 31/125
C 07C 337/00
(23) 02.09.2010.
(30) US 05.03.2004. 550699 P
(86) PCT/US2005007297 07.03.2005.
(96) EP 05724776.9 07.03.2005. En
(87) WO2005087211 22.09.2005. 200538
(97) EP 1734939 27.12.2006. 200652 En
(41) 06.04.2011. 201114
(54) ANTI-PARASITIC COMPOUNDS AND METHODS OF THEIR USE
(71) The Regents of The University of California, Office of Technology Transfer, 1111 Franklin Street, 12th Floor, Oakland, CA 94607-5200, US;
University of Cape Town, Research & Innovation, Lovers Walk, Lower Campus, 7701 Rondebosch, ZA
(72) CHIBALE, Kelly, 32 Franklin Road, 7708 Claremont, ZA;
GREENBAUM, Doron, C., 2002 Lombard Street, Philadelphia, PA 19146, US;
MCKERROW, James, H., 1512 Willard Street, San Francisco, CA 94117, US
(74) Campbell, Patrick John Henry, J.A. Kemp & Co., 14 South Square, Gray's Inn, London WC1R 5JJ, GB

(51) (8) **EP 1909777 ***
A 61K 31/13
(23) 26.01.2011.
(30) US 22.07.2005. 701710 P
US 08.08.2005. 706344 P
(86) PCT/US2006028602 24.07.2006.
(96) EP 06788261.3 24.07.2006. En
(87) WO2007014124 01.02.2007. 200705
(97) EP 1909777 16.04.2008. 200816 En
(41) 06.04.2011. 201114
(54) HIGH DRUG LOAD FORMULATIONS AND DOSAGE FORMS
(71) MYRIAD GENETICS, INC., 320 Wakara Way, Salt Lake City, Utah 84108, US
(72) ZENTNER, Gaylen M., 6312 S. Colleton Circle, Salt Lake City, Utah 84121, US;
MCREA, James C., 320 Wakara Way, Salt Lake City, Utah 84108, US;
WILLIAMS, Mark S., 816 S. Foxridge Drive, Raymore, Missouri 64083, US;
OEHRTMAN, Gregory T., 15120 Horton Street, Overland Park, Kansas 66223, US;
POWERS, Tracy Annette, 1031 Highlands Plaza DR.West, Bldg. 1031, Apt. 518, St. Louis, Missouri 63110, US
(74) Adam, Holger, et al, Kraus & Weisert, Patent- und Rechtsanwälte, Thomas-Wimmer-Ring 15, 80539 München, DE

(51) (8) **EP 2162124 ***
A 61K 31/13
A 61P 27/02
A 61P 27/10
(23) 23.09.2010.
(30) EP 08.06.2007. 07252336
US 08.06.2007. 933808 P
EP 07.04.2008. 08006925
(86) PCT/EP2008004531 06.06.2008.
(96) EP 08759071.7 06.06.2008. En
(87) WO2008148564 11.12.2008. 200850
(97) EP 2162124 17.03.2010. 201011 En
(41) 16.03.2011. 201111
(54) NERAMEXANE FOR THE TREATMENT OF NYSTAGMUS
(71) Merz Pharma GmbH & Co. KGaA, Eckenheimer Landstrasse 100, 60318 Frankfurt am Main, DE
(72) HANSCHMANN, Angelika, Neuer Weg 61, 60388 Frankfurt am Main, DE;
STÖFFLER, Albrecht, Sophienstrasse 58, 60487 Frankfurt am Main, DE;
ALTHAUS, Michael, Dresdener Str. 82, 61137 Schöneck, DE
(74) Goddard, Christopher Robert, Dehns, St Bride's House, 10 Salisbury Square, London, EC4Y 8JD, GB

(51) (8) **EP 1841465 ***
A 61K 31/135
C 07C 217/80
C 07F 13/00
(23) 11.11.2010.
(30) US 17.12.2004. 636696 P
US 02.06.2005. 686395 P
(86) PCT/US2005045682 19.12.2005.
(96) EP 05854410.7 19.12.2005. En
(87) WO2006066104 22.06.2006. 200625
(97) EP 1841465 10.10.2007. 200741 En
(41) 11.05.2011. 201119
(54) STILBENE DERIVATIVES AND THEIR USE FOR BINDING AND IMAGING AMYLOID PLAQUES
(71) The Trustees of The University of Pennsylvania, 3160 Chestnut Street, Suite 200, Philadelphia, Pennsylvania 19104-6283, US
(72) KUNG, Hank, F., 525 Foxglove Lane, Wynnewood, Pennsylvania 19096, US;
KUNG, Mei-Ping, 525 Foxglove Lane, Wynnewood, Pennsylvania 19096, US;
ZHUANG, Zhi-Ping, 3700 Market Street, Room 305, Philadelphia, Pennsylvania 19104, US
(74) Dörries, Hans Ulrich, et al, df-mp, Fünf Höfe, Theatinerstrasse 16, 80333 München, DE

(51) (8) **EP 1871350 ***
A 61K 31/16
A 61K 31/165
A 61P 37/04
(23) 02.11.2010.
(30) US 15.04.2005. 671910 P
(86) PCT/US2006014320 13.04.2006.
(96) EP 06750374.8 13.04.2006. En
(87) WO2006113572 26.10.2006. 200643
(97) EP 1871350 02.01.2008. 200801 En
(41) 11.05.2011. 201119
(54) METHODS OF INCREASING NATURAL KILLER CELL ACTIVITY FOR THERAPY
(71) Synta Pharmaceuticals Corporation, 45 Hartwell Avenue, Lexington, MA 02421, US
(72) BARSOUM, James, 6 Moreland Avenue, Lexington, Massachusetts 02421, US;
DU, Zhenjian, 18 Overlock Drive, Northborough, Massachusetts 01532, US
(74) Snodin, Michael D., Potter Clarkson LLP, Park View House, 58 The Ropewalk, Nottingham, NG1 5DD, GB

(51) (8) **EP 2061451 ***
A 61K 31/16
A 61K 31/165
A 61K 31/337
A 61K 45/06
A 61P 35/00
A 61P 17/00
(23) 08.09.2010.
(30) US 21.08.2006. 838977 P
(86) PCT/US2007018381 20.08.2007.
(96) EP 07837061.6 20.08.2007. En
(87) WO2008024305 28.02.2008. 200809
(97) EP 2061451 27.05.2009. 200922 En
(41) 16.03.2011. 201111
(54) BIS(THIOHYDRAZIDE AMIDES) FOR TREATING MELANOMA
(71) Synta Pharmaceuticals Corporation, 45 Hartwell Avenue, Lexington, MA 02421, US
(72) MCLEOD, Matthew, 371 Shawmut Avenue, Boston, MA 02118, US
(74) Snodin, Michael D., Potter Clarkson LLP, Park View House, 58 The Ropewalk, Nottingham, NG1 5DD, GB

(51) (8) **EP 2120911 ***
A 61K 31/165
A 61K 31/17
C 07C 237/24
C 07C 275/42
A 61P 3/04
A 61K 31/41
A 61K 31/435
C 07D 207/08
C 07D 207/16
C 07D 207/34
C 07D 209/42
C 07D 213/72
C 07D 213/81
C 07D 213/82
C 07D 215/04
(23) 20.10.2010.
(30) GB 15.02.2007. 0702960
GB 15.02.2007. 0702961
(86) PCT/GB2008050103 15.02.2008.
(96) EP 08709623.6 15.02.2008. En
(87) WO2008099221 21.08.2008. 200834
(97) EP 2120911 25.11.2009. 200948 En
(41) 20.04.2011. 201116
(54) AMIDE AND UREA DERIVATIVES FOR THE TREATMENT OF METABOLIC DISEASES
(71) PROSIDION LTD, Windrush Court, Watlington Road, Oxford, Oxfordshire OX4 6LT, GB
(72) BARBA, Oscar, Prosidion Limited, Windrush Court, Watlington Road, Oxford, Oxfordshire OX4 6LT, GB;
DAWSON, Graham, Prosidion Limited, Windrush Court, Watlington Road, Oxford, Oxfordshire OX4 6LT, GB;
GATTRELL, William, Prosidion Limited, Windrush Court, Watlington Road, Oxford Oxfordshire OX4 6LT, GB;
PROCTER, Martin, James, Prosidion Limited, Windrush Court, Watlington Road, Oxford Oxfordshire OX4 6LT, GB;
RASAMISON, Chrystelle, Marie, Prosidion Limited, Windrush Court, Watlington Road, Oxford Oxfordshire OX4 6LT, GB;
SAMBROOK-SMITH, Colin, Peter, Prosidion Limited, Windrush Court, Watlington Road, Oxford Oxfordshire OX4 6LT, GB;
WONG-KAI-IN, Philippe, Prosidion Limited, Windrush Court, Watlington Road, Oxford Oxfordshire OX4 6LT, GB
(74) Crump, Julian Richard John, et al, Mintz Levin Cohn Ferris Glovsky & Popeo, Intellectual Property LLP, Alder Castle, 10 Noble Street, London EC2V 7JX, GB

(51) (7) **EP 1732532 ***
A 61K 31/191
A 61K 31/18
C 07D 307/02
C 07D 311/14
C 07D 311/10
C 07D 311/08
C 07D 235/02
C 12Q 1/68
G 01N 33/78
(23) 01.10.2010.
(30) GB 22.03.2004. 0406378
(86) PCT/EP2005003030 22.03.2005.
(96) EP 05716286.9 22.03.2005. En
(87) WO2005092316 06.10.2005. 200540
(97) EP 1732532 20.12.2006. 200651 En
(41) 30.03.2011. 201113
(54) NOVEL PHARMACEUTICAL COMPOSITIONS COMPRISING AGONISTS OF THE THYROID RECEPTOR
(71) KARO BIO AB, Novum, 141 57 Huddinge, SE
(72) GARCIA COLLAZO, Anna Maria, Karo Bio AB, Novum, S-141 57 Huddinge, SE;
ERICSSON, Thomas Anders Wilson, Karo Bio AB, Novum, S-141 57 Huddinge, SE;
GARG, Neeraj, Karo Bio AB, Novum, S-141 57 Huddinge, SE;
LÖFSTEDT, Anton Joakim, Karo Bio AB, Novum, S-141 57 Huddinge, SE;
HANSSON, Tomas Fredrik, Karo Bio AB, Novum, S-141 57 Huddinge, SE
(74) Brady, Paul Andrew, et al, Abel & Imray, 20 Red Lion Street, London WC1R 4PQ, GB

(51) (8) **EP 1885351 ***
A 61K 31/196
A 61P 25/04
A 61P 29/00
(23) 21.10.2010.
(30) US 16.05.2005. 681323 P
AU 21.02.2006. 2006900855
(86) PCT/AU2006000649 16.05.2006.
(96) EP 06741089.4 16.05.2006. En
(87) WO2006122353 23.11.2006. 200647
(97) EP 1885351 13.02.2008. 200807 En
(41) 20.04.2011. 201116
(54) METHODS AND COMPOSITIONS FOR THE TREATMENT OF PAIN
(71) Nuon Therapeutics Pty Limited, Level 32, ABN AMRO Tower, 88 Phillip Street, Sydney, NSW 2000, AU
(72) Selley, Michael Lionel, 19 Holmes Street, Turramurra, New South Wales 2074, AU;
Williams, Richard Owen, 2 Sovereign Mews, Pearson Street, London Greater London E2 8ER, GB;
Inglis, Julie Jane, 25 St. Quintin Road, London Greater London E13 9DT, GB
(74) Brasnett, Adrian Hugh, et al, Mewburn Ellis LLP, 33 Gutter Lane, London, EC2V 8AS, GB

(51) (8) **EP 1986630 ***
A 61K 31/201
A 61K 31/202
A 61K 31/337
A 61K 31/355
A 61P 35/00
(23) 04.01.2011.
(30) CZ 20.12.2005. 20050796
(86) PCT/CZ2006000084 27.11.2006.
(96) EP 06817999.3 27.11.2006. En
(87) WO2007071205 28.06.2007. 200726
(97) EP 1986630 05.11.2008. 200845 En
(41) 23.03.2011. 201112
(54) A TAXANE DERIVATIVE CONTAINING PHARMACEUTICAL COMPOSITION WITH IMPROVED THERAPEUTIC EFFICACY
(71) Heaton a.s., Pizenska 166, 150 00 Praha 5, CZ
(72) KYSILKA, Vladimir, Duhová 2, 621 00 Brno, CZ

(74) Plicka, Josef, Cermák, Horejs Matejka a spol., Lawyers and Patent Attorneys, Národni 32, 110 00 Praha 1, CZ

(51) (8) **EP 2067473**
A 61K 31/205
A 61P 9/10
(23) 05.10.2010.
(30) EP 05.12.2007. 07122360
(96) EP 08170583.2 03.12.2008. En
(97) EP 2067473 10.06.2009. 200924 En
(41) 30.03.2011. 201113
(54) Medical use of 3-(2,2,2-trimethylhydrazinium) propionate salts
(71) Grindeks, a joint stock company, 53, Krustpils Street, Riga 1057, LV
(72) Stonans, Ilmars, R&D Grindeks, joint stock company, 53, Krustpils, LV-1057, Riga, LV;
Kalvins, Ivars, Aizkraukles street 21, LV-1006, Riga, LV

(51) (8) **EP 1940382 ***
A 61K 31/225
A 61P 17/00
A 61P 17/06
A 61P 25/28
A 61P 29/00
(23) 05.10.2010.
(30) DK 07.10.2005. 200500648
DK 07.04.2006. 200600511
US 07.04.2006. 744458 P
(86) PCT/DK2006000563 06.10.2006.
(96) EP 06791453.1 06.10.2006. En
(87) WO2007042035 19.04.2007. 200716
(97) EP 1940382 09.07.2008. 200828 En
(41) 16.03.2011. 201111
(54) COMBINATION THERAPY WITH FUMARIC ACID ESTERS FOR THE TREATMENT OF AUTOIMMUNE AND/OR INFLAMMATORY DISORDERS
(71) Aditech Pharma AG, c/o Domanda Verwaltungs GmbH, Baarerstrasse 43, 6300 Zug, CH
(72) NILSSON, Henrik, Cort Adelersgade 4, st.th., DK-1053 Copenhagen, DK
(74) Inspicos A/S, Kogle Allé 2, P.O. Box 45, 2970 Hørsholm, DK

(51) (8) **EP 1906950 ***
A 61K 31/33
A 61P 35/00
(23) 28.09.2010.
(30) US 21.06.2005. 692423 P
(86) PCT/US2006023987 21.06.2006.
(96) EP 06773618.1 21.06.2006. En
(87) WO2007002093 04.01.2007. 200701
(97) EP 1906950 09.04.2008. 200815 En
(41) 23.03.2011. 201112
(54) ANSAMYCIN FORMULATIONS AND METHODS OF USE THEREOF
(71) Infinity Discovery, Inc., 780 Memorial Drive, Cambridge, MA 02139, US
(72) TONG, Jeffrey K., 46 Commonwealth Ave., 8, Boston, MA 02116, US;
PORTER, James R., 10 Lake Shore Court, 2, Brighton, MA 02315, US

(74) Arends, William Gerrit, et al, Marks & Clerk LLP, 90 Long Acre, London, WC2E 9RA, GB

(51) (8) **EP 1832286**
A 61K 31/343
A 61K 31/519
A 61K 45/06
A 61P 25/20
A 61K 31/4535
(23) 31.03.2011.
(30) JP 13.12.2004. 2004359487
(86) PCT/JP2005022756 12.12.2005.
(96) EP 05814380.1 12.12.2005. Ja
(87) WO2006064754 22.06.2006. 200625
(97) EP 1832286 12.09.2007. 200737 En
(41) 11.05.2011. 201119
(54) PREVENTIVE OR THERAPEUTIC AGENT FOR SLEEP DISORDER
(71) Takeda Pharmaceutical Company Limited, 1-1, Doshomachi 4-chome, Chuo-ku, Osaka-shi, Osaka 5408645, JP
(72) HIRAI, Keisuke, TAKEDA PHARMACEUTICAL COMP. Ltd., 17-85, Jusohonmachi 2-chome, Yodogawa-ku, Osaka-shi, Osaka 532-8686, JP;
MIYAMOTO, Masaomi, TAKEDA PHARMACEUTICAL COMP.Ltd., 1-1, Doshomachi 4-chome, Chuo-ku, Osaka-shi, Osaka, JP
(74) Dossmann, Gérard, et al, Casalonga & Partners, Bayerstrasse 71-73, 80335 München, DE

(51) (8) **EP 2026793 ***
A 61K 31/343
A 61P 25/28
A 61P 25/16
A 61P 25/22
A 61P 25/24
A 61P 25/30
(23) 03.11.2010.
(30) DK 02.05.2006. 200600621
(86) PCT/DK2007050050 30.04.2007.
(96) EP 07722705.6 30.04.2007. En
(87) WO2007124757 08.11.2007. 200745
(97) EP 2026793 25.02.2009. 200909 En
(41) 27.04.2011. 201117
(54) USE OF ESCITALOPRAM FOR IMPROVING COGNITION
(71) H. Lundbeck A/S, Ottiliavej 9, 2500 Valby-Copenhagen, DK
(72) SVENSSON, Hans Torgny, Ringvägen 9, 18133 Lidingö, SE
(74) Madsen, Jens Toftelund, et al, H. Lundbeck A/S, Ottiliavej 9, DK-2500 Valby, DK

(51) (8) **EP 1855666 ***
A 61K 31/352
A 61K 9/12
A 61K 9/72
(23) 17.06.2010.
(30) US 25.02.2005. 656670 P
(86) PCT/US2006006791 24.02.2006.
(96) EP 06736170.9 24.02.2006. En
(87) WO2006091922 31.08.2006. 200635
(97) EP 1855666 21.11.2007. 200747 En

(41) 11.05.2011. 201119
(54) DRONABINOL COMPOSITIONS AND METHODS OF USING SAME
(71) UNIMED PHARMACEUTICALS, INC., 901 Sawyer Road, Marietta, Georgia 30062, US
(72) DE VRIES, M. H., P.o. Box 140, NL-1380 AC Weesp, NL;
MILLER, Jodi, 901 Sawyer Road, Marietta, Georgia 30062, US
(74) Gosmann, Martin, Abbott Products GmbH, IP Department (PH-ZP), Hans-Böckler-Allee 20, 30173 Hannover, DE

(51) (8) **EP 1962832 ***
A 61K 31/366
A 61K 31/397
A 61K 31/40
A 61K 31/553
A 61K 45/06
A 61P 1/16
A 61P 3/06
(23) 22.11.2010.
(30) US 01.06.2005. 685871 P
US 20.10.2005. 728329 P
(86) PCT/JP2006311362 31.05.2006.
(96) EP 06747198.7 31.05.2006. En
(87) WO2006129859 07.12.2006. 200649
(97) EP 1962832 03.09.2008. 200836 En
(41) 18.05.2011. 201120
(54) COMBINATIONS OF A QUALENE SYNTHASE INHIBITOR AND A HMG-COA REDUCTASE INHIBITOR FOR TREATING HYPERLIPIDEMIA
(71) Takeda Pharmaceutical Company Limited, 1-1, Doshomachi 4-chome, Chuo-ku, Osaka-shi, Osaka 541-0045, JP
(72) NISHIMOTO, Tomoyuki, c/o TAKEDA PHARM. COMP. LTD., 17-85, Jusohonmachi 2-chome, Yodogawa-ku, Osaka-shi, Osaka 532-8686, JP;
TOZAWA, Ryuichi, c/o TAKEDA PHARM. COMP. LTD., 17-85, Jusohonmachi 2-chome, Yodogawa-ku, Osaka-shi, Osaka 532-8686, JP;
WADA, Takeo, c/o TAKEDA PHARMACEUTICAL COMPANY LTD, 17-85, Jusohonmachi 2-chome, Yodogawa-ku, Osaka-shi, Osaka 532-8686, JP;
ISHIKAWA, Eiichiro,c/o TAKEDA PHARM. COMPANY LTD., 17-85, Jusohonmachi 2-chome, Yodogawa-ku, Osaka-shi, Osaka 532-8686, JP;
NISHI, Toshiya, c/o TAKEDA PHARM. COMPANY LTD., 17--85, Jusohonmachi 2-chome, Yodogawa-ku, Osaka-shi, Osaka 532-8686, JP;
YAMAKAWA, Hiroko, TAKEDA PHARMACEUTICAL COMPANY LIMITED, 10, Wadai, Tsukuba-shi, Ibaraki 300-4293, JP
(74) Dossmann, Gérard, Casalonga & Partners, Bayerstrasse 71-73, 80335 München, DE

(51) (8) **EP 1871361 ***
A 61K 31/397
A 61K 35/00
A 01N 25/00
(23) 01.11.2010.
(30) US 07.04.2005. 669591 P
(86) PCT/US2006012871 07.04.2006.
(96) EP 06740646.2 07.04.2006. En
(87) WO2006110473 19.10.2006. 200642
(97) EP 1871361 02.01.2008. 200801 En
(41) 04.05.2011. 201118
(54) PHOSPHOLIPID-BASED PHARMACEUTICAL FORMULATIONS AND METHODS FOR PRODUCING AND USING SAME
(71) Conforma Therapeutics Corporation, 9393 Towne Centre Drive, Suite 240, San Diego, CA 92121, US
(72) ULM, Edgar, H., 249 Pacific View Lane, Encinitas, CA 92024, US;
MANSFIELD, Robert, K., 7069 Montanes Lane, Carlsbad, CA 92009, US;
TIMONY, Gregg, A., 12103 Celome Lane, San Diego, CA 92121, US;
BOEHM, Marcus, F., 2811 Maple Street, San Diego, CA 92104, US
(74) Pohlman, Sandra M., df-mp, Fünf Höfe, Theatinerstrasse 16, 80333 München, DE

(51) (8) **EP 1962835 ***
A 61K 31/397
A 61K 31/445
A 61P 3/06
A 61P 3/10
(23) 11.10.2010.
(30) US 21.12.2005. 752710 P
US 29.03.2006. 787048 P
US 09.08.2006. 836642 P
US 30.10.2006. 855178 P
(86) PCT/US2006048455 19.12.2006.
(96) EP 06845826.4 19.12.2006. En
(87) WO2007075702 05.07.2007. 200727
(97) EP 1962835 03.09.2008. 200836 En
(41) 30.03.2011. 201113
(54) TREATMENT OF NONALCOHOLIC FATTY LIVER DISEASE USING CHOLESTEROL LOWERING AGENTS AND/OR H3 RECEPTOR ANTAGONIST/INVERSE AGONIST
(71) Schering Corporation, 2000 Galloping Hill Road, Kenilworth, NJ 07033-0530, US
(72) HWA, Joyce, J., 909 Prospect Street, Westfield, NJ 07090, US;
VAN HEEK, Margaret, 1851 Raritan Road, Scotch Plains, NJ 07076, US;
DAVIS, Harry, Jr., 64 River Bend Road, Berkeley Heights, NJ 07922, US
(74) HOFFMANN EITLE, Patent- und Rechtsanwälte, Arabellastraße 4, 81925 München, DE

(51) (8) **EP 2043631 ***
A 61K 31/397
A 61K 31/4184
A 61K 31/4439
A 61K 31/4709
A 61K 38/58
A 61P 7/02
A 61P 9/04
A 61P 9/10
A 61P 9/12
A 61P 9/14
A 61P 43/00
(23) 12.10.2010.
(30) EP 17.07.2006. 06117341

EP 15.02.2007. 07102512
(86) PCT/EP2007057255 13.07.2007.
(96) EP 07787523.5 13.07.2007. En
(87) WO2008009638 24.01.2008. 200804
(97) EP 2043631 08.04.2009. 200915 En
(41) 30.03.2011. 201113
(54) NEW INDICATIONS FOR DIRECT THROMBIN INHIBITORS IN THE CARDIOVASCULAR FIELD
(71) Boehringer Ingelheim International GmbH, Binger Straße 173, 55216 Ingelheim am Rhein, DE;
Boehringer Ingelheim Pharma GmbH & Co. KG, Binger Strasse 173, 55216 Ingelheim am Rhein, DE
(72) CLEMENS, Andreas, Nibelungenstr. 6, 65187 Wiesbaden, DE;
REILLY, Paul A., 900 Ridgebury Road, P.O.Box 368, Ridgefield, CT 06877, US;
PLOHMANN, Bernd, Siedlungstr. 67, 88433 Schemmerhofen, DE
(74) Hammann, Heinz, et al, Boehringer Ingelheim GmbH, CD-Patents, Binger Straße 173, 55216 Ingelheim am Rhein, DE

(51) (8) **EP 2165706**
A 61K 31/415
A 61K 9/00
A 61P 1/02
(23) 26.10.2010.
(96) EP 08164648.1 18.09.2008. En
(97) EP 2165706 24.03.2010. 201012 En
(41) 13.04.2011. 201115
(54) Treating Inflammatory Pain in Mucosa of the Oral Cavity Using Mucosal Prolonged Release Bioadhesive Therapeutic Carriers.
(71) BioAlliance Pharma, 49, boulevard du Général Martial Valin, 75015 Paris, FR
(72) ATTALI, Pierre, 2 rue du lieutenant Heitz, 94300, VINCENNES, FR
(74) Paris, Fabienne, et al, Ernest Gutmann - Yves Plasseraud S.A.S., 3, rue Auber, 75009 Paris, FR

(51) (8) **EP 2076261 ***
A 61K 31/4166
C 07D 211/70
C 07D 213/30
C 07D 233/60
C 07D 233/58
A 61K 31/4402
A 61K 31/4406
A 61K 31/4409
A 61P 11/00
A 61P 13/00
(23) 18.11.2010.
(30) IN 03.10.2006. DE21782006
(86) PCT/IB2007054008 02.10.2007.
(96) EP 07826627.7 02.10.2007. En
(87) WO2008041184 10.04.2008. 200815
(97) EP 2076261 08.07.2009. 200928 En
(41) 11.05.2011. 201119
(54) MUSCARINIC RECEPTOR ANTAGONISTS
(71) Ranbaxy Laboratories Limited, Plot No. 90, Sector - 32, Gurgaon 122 001, HR, IN
(72) KUMAR, Naresh, C-1796, Palam Vihar, Gurgaon, Haryana 122017, IN;
KAUR, Jaskiran, 1540 Ranjit Pura, P.O. Khalsa College, 143002 Amritsar, Punjab, IN;
RAY, Abhijit, Sector C-1, Flat No. 1408, Vasant Kunj, New Delhi, Delhi 110070, IN;
GUPTA, Suman, House No. 954, Sector - 31, Gurgaon, Haryana 122001, IN;
MALHOTRA, Shivani, 28/63, IInd Floor, West Patel Nagar, New Delhi, Delhi 110008, IN;
SHIRUMALLA, Rajkumar, 36A, Navyug Adarsh Apartments, Vikas Puri, New Delhi, Delhi 110018, IN
(74) Cronin, Brian Harold John, CRONIN Intellectual Property, Chemin de Précossy 31, 1260 Nyon, CH

(51) (7) **EP 1682128 ***
A 61K 31/425
(23) 18.02.2011.
(30) US 04.11.2003. 517020 P
(86) PCT/US2004036645 04.11.2004.
(96) EP 04810277.6 04.11.2004. En
(87) WO2005044198 19.05.2005. 200520
(97) EP 1682128 26.07.2006. 200630 En
(41) 06.04.2011. 201114
(54) PROCESS AND FORMULATION CONTAINING EPOTHILONES AND ANALOGS THEREOF
(71) Bristol-Myers Squibb Company, Route 206 and Province Line Road, P.O. Box 4000, Princeton NJ 08543-4000, US
(72) HABY, Thomas A., 6 Nevins Court, Hillsborough, NJ 08844, US;
GOGATE, Uday S., 22 Plains Gap Road, North Brunswick, NJ 08540, US;
NARINGREKAR, Vijay H., 12 Courtside Lane, Princeton, NJ 08540, US
(74) Vossius & Partner, Siebertstrasse 4, 81675 München, DE

(51) (8) **EP 2012781 ***
A 61K 31/425
(23) 02.11.2010.
(30) IN 27.04.2006. DE10752006
IN 08.08.2006. DE17942006
(86) PCT/IN2007000163 25.04.2007.
(96) EP 07736598.9 25.04.2007. En
(87) WO2007125544 08.11.2007. 200745
(97) EP 2012781 14.01.2009. 200903 En
(41) 11.05.2011. 201119
(54) PROCESS FOR THE PREPARATION OF POLYMORPHIC FORMS OF CLOPIDOGREL HYDROGEN SULFATE
(71) Ind-Swift Laboratories Limited, E-5, Industrial Area, Phace-II, S.A.S. Nagar, Mohali 160-055, Punjab, IN
(72) SAXENA, Rahul, E-5, Industrial Area, Phase-II S.A.S Nagar, Mohali 160 055, Punjab, IN;
VERMA, Naresh, Kumar, E-5, Industrial Area, Phase-II S.A.S Nagar, Mohali 160 055, Punjab, IN;
SRINIVASAN, Chidambaram, Venkateswaran, E-5, Industrial Area, Phase-II S.A.S Nagar, Mohali 160 055, Punjab, IN;
WADHWA, Lalit, E-5, Industrial Area, Phase-II S.A.S Nagar, Mohali 160 055, Punjab, IN
(74) Brand, Thomas Louis, W.P. Thompson & Co., 55 Drury Lane, London WC2B 5SQ, GB

(51) (8) **EP 2101767** *
A 61K 31/435
A 61K 31/44
A 61K 9/20
A 61K 9/28
A 61K 9/48
(23) 16.11.2010.
(30) US 07.12.2006. 868993 P
(86) PCT/US2007086358 04.12.2007.
(96) EP 07865155.1 04.12.2007. En
(87) WO2008073759 19.06.2008. 200825
(97) EP 2101767 23.09.2009. 200939 En
(41) 04.05.2011. 201118
(54) AN ARTICLE COMPRISING PRASUGREL
(71) Eli Lilly & Company, Lilly Corporate Center, Indianapolis, IN 46285, US
(72) MOON, Matthew John, 8584 Sunningdale Boulevard, Indianapolis, Indiana 46234, US;
OREN, Peter Lloyd, 6358 Manchester Drive, Fishers, Indiana 46038, US
(74) Commander, Paul Martin Brial, Eli Lilly and Company Limited, Lilly Research Centre, Erl Wood Manor, Sunninghill Road, Windlesham, Surrey GU20 6PH, GB

(51) (8) **EP 1976519** *
A 61K 31/44
C 07D 471/14
(23) 02.08.2010.
(30) US 27.01.2006. 763197 P
(86) PCT/US2007002297 26.01.2007.
(96) EP 07749384.9 26.01.2007. En
(87) WO2007100430 07.09.2007. 200736
(97) EP 1976519 08.10.2008. 200841 En
(41) 06.04.2011. 201114
(54) CYTISINE AND ACETYLCHOLINE ANALOGS AND METHODS OF TREATING MOOD DISORDERS
(71) Yale University, 2 Whitney Avenue, New Haven, CT 06511, US;
Rheinische Friedrich-Wilhelms-Universität Bonn, Regina-Pacis-Weg 3, 53113 Bonn, DE
(72) PICCIOTTO, Marina, 21 Vineyard Ave., Guilford, CT 06508, US;
GUNDISCH, Daniela, Arnold-bocklin-str. 19, 89520 Heidenheim, DE;
MUNOZ, Lenka, 401 W. Fullerton Pkwy, No. 1203e, Chicago, IL 60614, US;
ANDRA, Matthias, Lengsdorfer Hauptstr. 51, 53127 Bonn, DE;
MINEUR, Yann, 1924 Chapel St., Apt. 3, New Haven, CT 06515, US
(74) Dall'Olio, Giancarlo, et al, Invention S.r.l., Via delle Armi 1, 40137 Bologna, IT

(51) (8) **EP 2201951**
A 61K 31/44
A 61K 47/26
A 61K 47/34
A 01N 43/40
A 61K 8/34
A 61K 8/49
A 61K 8/60
(23) 23.11.2010.
(96) EP 08450183.2 14.11.2008. De
(97) EP 2201951 30.06.2010. 201026 De
(41) 18.05.2011. 201120
(54) Octenidine composition
(71) Aydinoglu, Ahmet Melih, Ata Plaza A-Blok, Ceyhun Atif Kansu Cad., No. 100 Kat:9 D:28, Balgat, Ankara, TR
(72) Aydinoglu, Ahmet Melih, Ata Plaza A-Blok, Ceyhun Atif Kansu Cad., No. 100 Kat:9 D:28, Balgat, Ankara, TR
(74) Sonn & Partner Patentanwälte, Riemergasse 14, 1010 Wien, AT

(51) (8) **EP 1931340** *
A 61K 31/4427
A 61K 9/14
A 61P 9/12
(23) 11.10.2010.
(30) US 15.06.2005. 690716 P
(86) PCT/US2006023243 14.06.2006.
(96) EP 06773211.5 14.06.2006. En
(87) WO2006138421 28.12.2006. 200652
(97) EP 1931340 18.06.2008. 200825 En
(41) 30.03.2011. 201113
(54) NANOPARTICULATE AZELNIDIPINE FORMULATIONS
(71) Elan Pharma International Limited, Monksland, Athlone, Westmeath, IE
(72) JENKINS, Scott, 1451 Carolina Place, Downingtown, PA 19335, US;
LIVERSIDGE, Gary, G., 258 Colwyn Terrace, Westchester, PA 19380, US
(74) Wichmann, Hendrik, et al, Wuesthoff & Wuesthoff, Schweigerstrasse 2, 81541 München, DE

(51) (7) **EP 1737455** *
A 61K 31/4453
A 61P 25/02
A 61K 9/22
A 61K 9/26
A 61K 47/32
A 61K 9/28
(23) 01.10.2010.
(30) AT 05.03.2004. 3862004
(86) PCT/EP2005002379 07.03.2005.
(96) EP 05715792.7 07.03.2005. En
(87) WO2005094825 13.10.2005. 200541
(97) EP 1737455 03.01.2007. 200701 En
(41) 11.05.2011. 201119
(54) CONTROLLED RELEASE PHARMACEUTICAL COMPOSITION OF TOLPERISONE FOR ORAL ADMINISTRATION
(71) Sanochemia Pharmazeutika Aktiengesellschaft, Boltzmanngasse 11, 1090 Wien, AT
(72) BODENTEICH, Angelika, Schopenhauerstrasse 47/4, A-1180 Wien, AT;
PIRICH, Eberhard, Felix-Mottl-Strasse 32, A-1190 Wien, AT;
BÖCKMANN, Josef, DR. Ludwig Riegerstrasse 4/4, A-2340 Mödling, AT;
FRANTSITS, Werner, Nothartgasse 19, A-1130 Wien, AT
(74) Dungler, Karin, et al, Beer & Partner, Lindengasse 8, 1070 Wien, AT

(51) (8) **EP 2173343** *
A 61K 31/4468
A 61P 25/28
A 61K 31/519
(23) 28.09.2010.
(30) US 18.05.2007. 938985 P
US 08.06.2007. 942990 P
(86) PCT/US2008064154 19.05.2008.
(96) EP 08769520.1 19.05.2008. En
(87) WO2008144665 27.11.2008. 200848
(97) EP 2173343 14.04.2010. 201015 En
(41) 30.03.2011. 201113
(54) USE OF PIMAVANSERIN IN THE TREATMENT OF PARKINSON AND SYMPTOMS THEREOF
(71) Acadia Pharmaceuticals Inc., 3911 Sorrento Valley Blvd., San Diego, CA 92121-1402, US
(72) VANOVER, Kimberly, E., 13066 Candela Place, San Diego, CA 92130, US;
VAN KAMMEN, Daniel, P., 63 DeVONshire Drive, Princeton, NJ 08540, US;
TOLF, Bo-ragnar, Regementsgatan 76, S-217 51 Malmo, SE;
SCHLIENGER, Nathalie, Falstersvej 2, 1. Tv., DK-2000 Frederiksberg, DK;
WILLIAMS, Hilde, 3303 Zola Street, San Diego, CA 92106, US;
DAVIS, Robert, E., 13272 Glencliff Way, San Diego, CA 92130, US;
WEINER, David, M., P.O. Box 910626, San Diego, CA 92191, US;
MAYALL, Eve, Taylor, 734 Puebla Street, Encinitas, CA 92024, US
(74) Jones Day, Rechtsanwälte, Attorneys-at-Law, Patentanwälte, Prinzregentenstrasse 11, 80538 München, DE

(51) (8) **EP 2037919** *
A 61K 31/45
A 61K 31/454
A 61K 31/4545
A 61P 35/00
(23) 11.11.2010.
(30) US 30.06.2006. 818128 P
(86) PCT/US2007014956 27.06.2007.
(96) EP 07796519.2 27.06.2007. En
(87) WO2008005266 10.01.2008. 200802
(97) EP 2037919 25.03.2009. 200913 En
(41) 04.05.2011. 201118
(54) METHOD OF USING SUBSTITUTED PIPERIDINES THAT INCREASE P53 ACTIVITY
(71) Schering Corporation, 2000 Galloping Hill Road, Kenilworth, NJ 07033-0530, US
(72) WANG, Yaolin, 217 West Sherman Avenue, Edison, NJ 08820, US;
ZHANG, Rumin, 4 DeVON Road, Edison, NJ 08820, US;
MA, Yao, 205 Wood Street, Lexington, MA 02421, US;
LAHUE, Brian, R., 1 Jesseca J. Drive, Millbury, MA 01527, US;
SHIPPS, Gerald, W., Jr., 5 Daniel Drive, Stoneham, MA 02180, US
(74) van Wezenbeek, Petrus M.G.F., et al, N.V. Organon, P.O. Box 20, 5340 BH Oss, NL

(51) (8) **EP 2001471** *
A 61K 31/4525
A 61P 7/00
(23) 05.10.2010.
(30) US 06.04.2006. 790469 P
US 26.05.2006. 808611 P
US 31.05.2006. 809785 P
US 23.08.2006. 839484 P
US 23.08.2006. 839474 P
(86) PCT/US2007008612 05.04.2007.
(96) EP 07755024.2 05.04.2007. En
(87) WO2007117621 18.10.2007. 200742
(97) EP 2001471 17.12.2008. 200851 En
(41) 30.03.2011. 201113
(54) USE OF COMBINATION PREPARATIONS CONTAINING THROMBIN RECEPTOR ANTAGONISTS FOR TREATING CARDIOVASCULAR DISORDERS
(71) Schering Corporation, 2000 Galloping Hill Road, Kenilworth, NJ 07033-0530, US
(72) VELTRI, Enrico, P., 6 Toftrees Court, Princeton, NJ 08540, US;
GREENLEE, William, J., 115 Herrick Avenue, Teaneck, NJ 07666, US
(74) Rollins, Anthony John, et al, Merck Sharp & Dohme Limited, European Patent Department, Hertford Road, Hoddesdon, Hertfordshire EN11 9BU, GB

(51) (8) **EP 1983986** *
A 61K 31/4545
A 61P 29/00
C 07D 211/26
C 07D 211/96
C 07D 405/14
C 07D 409/14
C 07D 413/14
(23) 01.09.2010.
(30) EP 10.02.2006. 06101551
(86) PCT/EP2007051123 06.02.2007.
(96) EP 07726319.2 06.02.2007. En
(87) WO2007090836 16.08.2007. 200733
(97) EP 1983986 29.10.2008. 200844 En
(41) 30.03.2011. 201113
(54) PIPERIDINE DERIVATIVES AS CXCR3 RECEPTOR ANTAGONISTS
(71) Janssen Pharmaceutica N.V., Turnhoutseweg 30, 2340 Beerse, BE
(72) COESEMANS, Erwin, Turnhoutseweg 30, B-2340 Beerse, BE;
BONGARTZ, Jean-Pierre, André, Marc, Turnhoutseweg 30, B-2340 Beerse, BE;
VAN LOMMEN, Guy, Rosalia, Eugeen, Turnhoutseweg 30, B-2340 Beerse, BE
(74) Quaghebeur, Luc, Janssen Pharmaceutica N.V., Patent Department, Turnhoutseweg 30, 2340 Beerse, BE

(51) (8) **EP 1901745** *
A 61K 31/4709
(23) 05.11.2010.
(30) US 10.06.2005. 689718 P
(86) PCT/US2006022391 07.06.2006.
(96) EP 06772631.5 07.06.2006. En
(87) WO2006135713 21.12.2006. 200651

(97) EP 1901745 26.03.2008. 200813 En
(41) 27.04.2011. 201117
(54) SYNERGISTIC MODULATION OF FLT3 KINASE USING AMINOPYRIMIDINES KINASE MODULATORS AND A FARNESYL TRANSFERASE INHIBITOR
(71) Janssen Pharmaceutica NV, Turnhoutseweg 30, 2340 Beerse, BE
(72) BAUMANN, Christian, Andrew, 231 Biddle Drive, Exton, PA 19341, US;
GAUL, Michael, David, 656 Burgundy Place, Yardley, Pennsylvania 19067, US
(74) Warner, James Alexander, et al, Carpmaels & Ransford, One Southampton Row, London, WC1B 5HA, GB

(51) (8) **EP 2043645 ***
A 61K 31/4745
A 61P 35/00
(23) 22.11.2010.
(30) US 12.06.2006. 812835 P
(86) PCT/US2007013873 12.06.2007.
(96) EP 07796066.4 12.06.2007. En
(87) WO2007146335 21.12.2007. 200751
(97) EP 2043645 08.04.2009. 200915 En
(41) 18.05.2011. 201120
(54) COMPOUNDS AND COMPOSITIONS FOR TREATMENT OF CANCER
(71) Sunesis Pharmaceuticals, Inc., 395 Oyster Point Blvd., Suite 400, South San Francisco, CA 94080, US
(72) ADELMAN, Daniel, C., 23 Woodleaf Avenue, Redwood City, CA 94061, US;
EVANCHIK, Marc, J., 3558 Vista Del Valle, San Jose, CA 95132, US;
SUDHAKAR, Anantha, 42356 Troyer Avenue, Fremont, CA 94539, US;
JACOBS, Jeffrey, William, 505 Cornell Avenue, San Mateo, CA 94402, US;
SILVERMAN, Jeffrey, A., 1416 Columbus Avenue, Burlingame, CA 94010, US
(74) Ritter, Thomas Kurt, et al, Jones Day, Prinzregentenstraße 11, 80538 München, DE

(51) (8) **EP 2139480 ***
A 61K 31/495
A 61K 45/06
A 61P 9/00
A 61P 3/10
A 61P 5/50
(23) 03.11.2010.
(30) US 12.04.2007. 911457 P
US 02.10.2007. 977009 P
US 05.02.2008. 26223
(86) PCT/US2008060090 11.04.2008.
(96) EP 08745651.3 11.04.2008. En
(87) WO2008128086 23.10.2008. 200843
(97) EP 2139480 06.01.2010. 201001 En
(41) 20.04.2011. 201116
(54) RANOLAZINE FOR ENHANCING INSULIN SECRETION
(71) CV Therapeutics Inc., 3172 Porter Drive, Palo Alto, CA 94304, US
(72) DHALLA, Arvinder, 131 College Street, Mountain View, CA 94040, US;
BELARDINELLI, Luiz, 205 Manzania Avenue, Palo Alto, CA 94306, US;
SHRYOCK, John, 2313 Vines Court, East Palo Alto, CA 94303, US;
LEUNG, Kwan, 274 Walter Hays Drive, Palo Alto, CA 94303, US;
ZENG, Dewan, 871 Sycamore Drive, Palo Alto, CA 94303, US
(74) Schnappauf, Georg, et al, Dr. Volker Vossius, Patent- und Rechtsanwaltskanzlei, Geibelstrasse 6, 81679 München, DE

(51) (8) **EP 1864663**
A 61K 31/50
A 61K 31/192
A 61K 31/415
A 61K 31/426
A 61P 29/00
A 61P 43/00
C 07D 237/14
(23) 01.10.2010.
(30) US 29.03.2005. 665852 P
US 30.11.2005. 740658 P
US 27.12.2005. 756254 P
US 13.01.2006. 758569 P
(86) PCT/JP2006306363 28.03.2006.
(96) EP 06730311.5 28.03.2006. Ja
(87) WO2006104172 05.10.2006. 200640
(97) EP 1864663 12.12.2007. 200750 En
(41) 20.04.2011. 201116
(54) PREVENTIVE AND/OR THERAPEUTIC AGENT FOR RHEUMATOID ARTHRITIS
(71) Kowa Co., Ltd., 6-29, Nishiki 3-chome, Naka-ku, Nagoya-shi, Aichi 460-8625, JP
(72) TABUNOKI, Yuichiro, 3-3-26, Koyama, Higashikurume-shi, Tokyo, 203-0051, JP;
KOSHI, Tomoyuki, 4-4-206, Tate 2-chome, Shiki-shi, Saitama, 353-0006, JP
(74) Blodig, Wolfgang, Wächtershäuser & Hartz, Weinstrasse 8, 80333 München, DE

(51) (8) **EP 1942899 ***
A 61K 31/513
C 07C 229/60
C 07C 237/22
C 07C 255/57
C 07C 271/22
C 07D 213/73
C 07D 233/58
C 07D 233/61
C 07D 233/90
C 07D 413/06
C 07D 471/04
C 07D 498/04
(23) 24.06.2010.
(30) US 02.11.2005. 732962 P
(86) PCT/US2006042801 01.11.2006.
(96) EP 06827370.5 01.11.2006. En
(87) WO2007056056 18.05.2007. 200720
(97) EP 1942899 16.07.2008. 200829 En
(41) 23.03.2011. 201112
(54) MITOTIC KINESIN INHIBITORS
(71) Cytokinetics, Inc., 280 East Grand Avenue, South San Francisco, CA 94080, US

(72) QIAN, Xiangping, 114 Mira St., Foster City, California 94404, US;
BERGNES, Gustave, 74 Kathleen Court, Pacifica, California 94044, US
(74) Marshall, Cameron John, et al, Carpmaels & Ransford, One Southampton Row, London, WC1B 5HA, GB

(51) (7) **EP 1711054** *
A 61K 31/5415
A 01N 25/00
A 01N 27/00
A 01N 43/00
A 01N 43/02
A 01N 43/46
A 61K 31/015
A 61K 31/553
A 61K 31/554
A 61K 31/335
A 61K 31/55
(23) 01.09.2010.
(30) US 05.02.2004. 772809
(86) PCT/US2005003253 03.02.2005.
(96) EP 05712627.8 03.02.2005. En
(87) WO2005077168 25.08.2005. 200534
(97) EP 1711054 18.10.2006. 200642 En
(41) 13.04.2011. 201115
(54) METHOD AND COMPOSITIONS FOR TREATMENT OF PAINFUL DISORDERS
(71) Rodlen Laboratories, Inc., 100 Fairway Drive, Veron Hills, IL 60061, US
(72) BERNSTEIN, Joel, E., 615 Brierhill Road, Deerfield, IL 60015, US
(74) Grund, Martin, et al, GRUND, Intellectual Property Group, Postfach 44 05 16, 80754 München, DE

(51) (8) **EP 1889632**
A 61K 31/553
A 61P 3/06
A 61P 17/00
(23) 03.11.2010.
(30) JP 22.04.2005. 2005124781
(86) PCT/JP2006308402 21.04.2006.
(96) EP 06745533.7 21.04.2006. Ja
(87) WO2006115193 02.11.2006. 200644
(97) EP 1889632 20.02.2008. 200808 En
(41) 18.05.2011. 201120
(54) REMEDY FOR XANTHOMA
(71) National University Corporation, Kobe University, 1-1, Rokkodai-cho, Nada-ku, Kobe-shi, Hyogo 657-8501, JP; Takeda Pharmaceutical Company Limited, 1-1, Doshomachi 4-chome, Chuo-ku, Osaka-shi, Osaka 541-0045, JP
(72) SHIOMI, Masashi,Nat. Uni. Corp. Kobe University, 1-1, Rokkodai-cho, Nada-ku, Kobe-shi, Hyogo 657-8501, JP;
ITO, Takashi,Nat. Uni. Corp. Kobe University, 1-1, Rokkodai-cho, Nada-ku, Kobe-shi, Hyogo 657-8501, JP;
TOZAWA, Ryuichi, Takeda Pharmaceutical Co., Ltd., 17-85, Jusohonmachi 2-chome, Yodogawa-ku, Osaka-shi, Osaka 532-8686, JP;
AMANO, Yuichiro, Takeda Pharmaceutical Co., Ltd., 17-85, Jusohonmachi 2-chome, Yodogawa-ku, Osaka-shi, Osaka 528-8686, JP
(74) Dossmann, Gérard, Casalonga & Partners, Bayerstrasse 71-73, 80335 München, DE

(51) (8) **EP 1865777** *
A 61K 31/555
A 61K 9/08
A 61P 1/16
(23) 14.03.2011.
(30) US 01.04.2005. 96359
US 30.09.2005. 239769
(86) PCT/US2006012185 31.03.2006.
(96) EP 06749109.2 31.03.2006. En
(87) WO2006107806 12.10.2006. 200641
(97) EP 1865777 19.12.2007. 200751 En
(41) 27.04.2011. 201117
(54) STANNSOPORFIN COMPOSITIONS AND ADMINISTRATION
(71) InfaCare Pharmaceutical Corporation, 8 Neshaminy Interplex Suite 221, Trevose PA 19053-6944, US
(72) LANG, Philip, C., 29 Westbrook Drive, Toms River, New Jersey 08757, US;
DRUMMOND, George, S., One River Place, Apt. No. 1612, New York, New York 10023, US
(74) Schmidt, Karsten, et al, ZACCO GmbH, Bayerstrasse 83, 80335 München, DE

(51) (8) **EP 1824494** *
A 61K 31/5575
A 61P 15/12
A 61P 15/10
A 61K 9/06
A 61K 47/38
A 61K 47/14
A 61K 47/10
(23) 01.07.2010.
(30) US 10.12.2004. 10154
(86) PCT/IB2005003672 05.12.2005.
(96) EP 05810583.4 05.12.2005. En
(87) WO2006061689 15.06.2006. 200624
(97) EP 1824494 29.08.2007. 200735 En
(41) 16.03.2011. 201111
(54) TOPICAL DRUG DELIVERY SYSTEM
(71) Drizen, Alan, 100 Canyon Avenue, Suite 1201, Toronto, Ontario M3H 5T9, CA;
Guerra, John G., 2253 Leominster Drive, Burlington, Ontario L7P 3W8, CA
(72) Drizen, Alan, 100 Canyon Avenue, Suite 1201, Toronto, Ontario M3H 5T9, CA;
Guerra, John G., 2253 Leominster Drive, Burlington, Ontario L7P 3W8, CA
(74) Swinkels, Bart Willem, et al, Nederlandsch Octrooibureau, P.O. Box 29720, 2502 LS Den Haag, NL

(51) (8) **EP 1930010**
A 61K 31/565
A 61K 31/57
A 61P 15/12
A 61P 15/18
A 61P 15/00
(23) 05.11.2010.
(30) EP 20.10.2006. 06022091
(96) EP 07009373.7 10.05.2007. De
(97) EP 1930010 11.06.2008. 200824 De
(41) 04.05.2011. 201118

(54) Application of estradiol valerate or 17ß-estradiol in combination with dienogest for oral therapy to maintain and/or increase the female libido
(71) Bayer Schering Pharma Aktiengesellschaft, Müllerstrasse 178, 13353 Berlin, DE
(72) Zeun, Susan, Tunnelstrasse 36 b, 10245 Berlin, DE; Zimmermann, Holger, Lessingallee 3a, 14612 Falkensee, DE; Parke, Susanne, Berkaer Strasse 2, 14199 Berlin, DE

(51) (7) **EP 1691819 ***
A 61K 31/74
A 61P 3/00
(23) 26.10.2010.
(30) US 25.11.2003. 525497 P
(86) PCT/US2004041345 24.11.2004.
(96) EP 04813646.9 24.11.2004. En
(87) WO2005051331 09.06.2005. 200523
(97) EP 1691819 23.08.2006. 200634 En
(41) 20.04.2011. 201116
(54) CHAPERONE-BASED THERAPY FOR NIEMANN-PICK DISEASE
(71) The Mount Sinai School of Medicine of New York, University, One Gustave L. Levy Place, New York, NY 10029, US
(72) SCHUCHMAN, Edward, H., 300 Lakeshore Drive, Haworth, NJ 07641, US;
DESNICK, Robert, J., 170 East 93rd Street, New York, NY 10128, US
(74) Olsen, Lars Pallisgaard, et al, Zacco Denmark A/S, Hans Bekkevolds Allé 7, 2900 Hellerup, DK

(51) (7) **EP 1734973 ***
A 61K 35/00
A 61K 38/00
A 61P 9/10
(23) 03.08.2010.
(30) US 24.03.2004. 556000 P
(86) PCT/US2005009797 23.03.2005.
(96) EP 05732234.9 23.03.2005. En
(87) WO2005092068 06.10.2005. 200540
(97) EP 1734973 27.12.2006. 200652 En
(41) 13.04.2011. 201115
(54) NOVEL METHOD OF NEUROPROTECTION BY PHARMACOLOGICAL INHIBITION OF AMP-ACTIVATED PROTEIN KINASE
(71) Fasgen, LLC, 800 W. Baltimore Street, Suite 150, Baltimore, MD 21201, US;
JOHNS HOPKINS UNIVERSITY, 4910 Eastern Avenue, Baltimore, MD 21224, US
(72) MCCULLOUGH, Louise D., John Hopkins University, 1006B Preclinical Teaching Bldg., 725 N. Wolfe St., Baltimore, MD 21205, US;
LI, Hong, John Hopkins University, 1006B Preclinical Teaching Bldg., 725 N. Wolfe St., Baltimore, MD 21205, US;
MCFADDEN, Jill, John Hopkins University, 1006B Preclinical Teaching Bldg., 725 N. Wolfe St, Baltimore, MD 21205, US;
RONNETT, Gabriele V., John Hopkins University, 1006B Preclinical Teaching Bldg., 725 N. Wolfe St, Baltimore, MD 21205, US
(74) Zanoli, Enrico, Zanoli & Giavarini S.r.l., Via Melchiorre Gioia, 64, 20125 Milano, IT

(51) (8) **EP 1993573 ***
A 61K 35/12
C 12Q 1/68
G 01N 33/53
(23) 03.08.2010.
(30) US 13.01.2006. 759254 P
(86) PCT/US2007001015 16.01.2007.
(96) EP 07718339.0 16.01.2007. En
(87) WO2007084446 26.07.2007. 200730
(97) EP 1993573 26.11.2008. 200848 En
(41) 23.03.2011. 201112
(54) SYSTEMS AND METHODS FOR MONITORING IMMUNE RESPONSES AND PREDICTING OUTCOMES IN TRANSPLANT RECIPIENTS
(71) Renovar, Inc., 505 South Rosa Road, Suite 30B, Madison, WI 53719, US
(72) HU, Huaizhong, 1426 Dayflower Drive, Madison, WI 53711, US;
KNECHTLE, Stuart, 2268 Caine Road, Fitchburg, WI 53575, US;
KWUN, Jean, 105 Eagle Heights, Apt. K., Madison, WI 53505, US
(74) Glawe, Delfs, Moll, Patent- und Rechtsanwälte, Rothenbaumchaussee 58, 20148 Hamburg, DE

(51) (8) **EP 1863513 ***
A 61K 38/00
(23) 01.10.2010.
(30) US 11.03.2005. 660596 P
(86) PCT/US2006008835 13.03.2006.
(96) EP 06748358.6 13.03.2006. En
(87) WO2006099261 21.09.2006. 200638
(97) EP 1863513 12.12.2007. 200750 En
(41) 04.05.2011. 201118
(54) POTENT AND SPECIFIC IMMUNOPROTEASOME INHIBITORS
(71) The University of North Carolina at Chapel Hill, 308 Bynum Hall, Campus Box 4105, Chapel Hill, NC 27599-4105, US;
Mount Sinai School of Medicine, Office of Industrial Liaison, One Gustave L. Levy Place, Box 1675, New York, NY 10029-6574, US
(72) ORLOWSKI, Robert, Z., 100 Glade Street, Chapel Hill, North Carolina 27516, US;
ORLOWSKI, Marian, 531 W Barbee Chapel Road, Chapel Hill, NC 27517-7710, US
(74) Behnisch, Werner, et al, Reinhard, Skuhra, Weise & Partner GbR, Patent- und Rechtsanwälte, Friedrichstrasse 31, 80801 München, DE

(51) (8) **EP 2056849 ***
A 61K 38/00
A 61K 39/00
A 61K 39/38
G 01N 33/53
C 12N 5/06
C 07K 16/00
C 07H 21/04
(23) 01.03.2011.
(30) US 04.08.2006. 835420 P
(86) PCT/US2007017479 06.08.2007.
(96) EP 07811120.0 06.08.2007. En
(87) WO2008019131 14.02.2008. 200807

(97) EP 2056849 13.05.2009. 200920 En
(41) 13.04.2011. 201115
(54) METHODS AND COMPOSITIONS FOR TREATING IGE-MEDIATED DISEASES
(71) The Trustees of the University of Pennsylvania, 3160 Chestnut Street, Suite 200, Philadelphia, PA 19104-6283, US
(72) PATERSON, YVONne, 514 South 46th Street, Philadelphia, PA 19143, US
(74) Matthews, Derek Peter, et al, Dehns, St Bride's House, 10 Salisbury Square, London, EC4Y 8JD, GB

(51) (8) **EP 1981524 ***
A 61K 38/06
A 61K 38/07
A 61K 38/08
A 61K 45/06
A 61P 31/14
(23) 19.10.2010.
(30) US 09.02.2006. 771927 P
US 30.08.2006. 841298 P
(86) PCT/US2007003556 09.02.2007.
(96) EP 07763660.3 09.02.2007. En
(87) WO2007092616 16.08.2007. 200733
(97) EP 1981524 22.10.2008. 200843 En
(41) 13.04.2011. 201115
(54) COMBINATIONS COMPRISING HCV PROTEASE INHIBITOR(S) AND HCV POLYMERASE INHIBITOR(S), AND METHODS OF TREATMENT RELATED THERETO
(71) Schering Corporation, 2000 Galloping Hill Road, Kenilworth, NJ 07033-0530, US
(72) TONG, Xiao, 2 Hershey Road, East Brunswick, NJ 08816, US;
MALCOLM, Bruce, A., 344 Paoli Woods, Paoli, PA 19301, US;
HUANG, Hsueh-Cheng, 7 Cardinal Court, Berkeley Heights, NJ 07922, US
(74) Horgan, James Michael Frederic, et al, Merck Sharp & Dohme Ltd., European Patent Department, Hertford Road, Hoddesdon, Hertfordshire EN11 9BU, GB

(51) (8) **EP 1846016 ***
A 61K 38/08
A 61P 9/10
C 07K 7/06
(23) 26.10.2010.
(30) US 04.01.2005. 641413 P
(86) PCT/US2005046951 23.12.2005.
(96) EP 05857205.8 23.12.2005. En
(87) WO2006078421 27.07.2006. 200630
(97) EP 1846016 24.10.2007. 200743 En
(41) 20.04.2011. 201116
(54) METHODS OF INCREASING CEREBRAL BLOOD FLOW
(71) THE BOARD OF TRUSTEES OF, THE LELAND STANFORD JUNIOR UNIVERSITY, Stanford, California 94305, US
(72) MOCHLY-ROSEN, Daria, 825 Harvard Avenue, Menlo Park, California 94025, US;
BRIGHT, Rachel, 1852 Antioch Road, Claremont, California 91711, US
(74) Vossius & Partner, Siebertstrasse 4, 81675 München, DE

(51) (8) **EP 2032152 ***
A 61K 38/17
A 61P 35/00
(23) 02.10.2010.
(30) US 20.06.2006. 814877 P
(86) PCT/GB2007002289 20.06.2007.
(96) EP 07733289.8 20.06.2007. En
(87) WO2007148078 27.12.2007. 200752
(97) EP 2032152 11.03.2009. 200911 En
(41) 23.03.2011. 201112
(54) USE CATHELICIDIN ANTIMICROBIAL PROTEIN (HCAP18) AS ANTICANCER AGENT
(71) Lipopeptide AB, Fogdevreten 2B, 171 77 Stockholm, SE
(72) STAHLE, Mona, Karlbergsvägen 67, 113 35 Stockholm, SE;
WEBER, Gunther, 4 rue Mirabeau, 37300 Joué les Tours, FR
(74) Smith, Stephen Edward, Potter Clarkson LLP, Park View House, 58 The Ropewalk, Nottingham, NG1 5DD, GB

(51) (8) **EP 2241323**
A 61K 38/17
C 07K 14/78
C 07K 16/30
(23) 08.11.2010.
(96) EP 09157890.6 14.04.2009. En
(97) EP 2241323 20.10.2010. 201042 En
(41) 23.03.2011. 201112
(54) Tenascin-W and brain cancers
(71) Novartis Forschungsstiftung, Zweigniederlassung, Friedrich Miescher Institute, For Biomedical Research, Maulbeerstrasse 66, 4058 Basel, CH
(72) The designation of the inventor has not yet been filed
(74) Favre, Nicolas, Novartis Pharma AG, Patent Department, 4002 Basel, CH

(51) (7) **EP 1737484 ***
A 61K 38/18
A 61P 7/06
(23) 26.12.2010.
(30) US 26.03.2004. 556923 P
(86) PCT/US2005009873 24.03.2005.
(96) EP 05731453.6 24.03.2005. En
(87) WO2005097167 20.10.2005. 200542
(97) EP 1737484 03.01.2007. 200701 En
(41) 04.05.2011. 201118
(54) COMBINATION DOSING REGIMEN FOR ERYTHROPOIETIN
(71) Janssen Pharmaceutica NV, Turnhoutseweg 30, 2340 Beerse, BE
(72) CHEUNG, Wing, K., 21 Crosswood Way, Warren, New Jersey 07059, US
(74) Mercer, Christopher Paul, et al, Carpmaels & Ransford, One Southampton Row, London, WC1B 5HA, GB

(51) (7) **EP 1729802 ***
A 61K 39/00
A 61K 39/21
(23) 26.10.2010.
(30) US 12.03.2004. 552871 P
(86) PCT/US2005008238 11.03.2005.
(96) EP 05725427.8 11.03.2005. En
(87) WO2005089231 29.09.2005. 200539
(97) EP 1729802 13.12.2006. 200650 En

(41) 27.04.2011. 201117
(54) ENHANCED ACTIVITY OF HIV VACCINE USING A SECOND GENERATION IMMUNOMODULATORY OLIGONUCLEOTIDE
(71) HYBRIDON, INC., 345 Vassar Street, Cambridge, Massachusetts 02139, US;
THE IMMUNE RESPONSE CORPORATION, 5931 Darwin Court, Carlsbad, CA 92008, US
(72) CLERICI, Mario, Viale Premuda, 23, I-20129 Milano, IT;
BARTHOLOMEW, Richard, 13883 Freeport Road, San Diego, CA 92129, US;
BRAY, Dorothy, Staple Ash, Speen Road, North Dean, Bucks HP14 4NN, GB;
KANDIMALLA, Ekambar, 6 Candlewood Lane, Southboro, MA 01772-1981, US;
AGRAWAL, Sudhir, 61 Lamplighter Drive, Shrewsbury, MA 01545-5456, US
(74) Schnappauf, Georg, Dr. Volker Vossius, Patent- und Rechtsanwaltskanzlei, Geibelstrasse 6, 81679 München, DE

(51) (8) **EP 1993597 ***
A 61K 39/00
A 61K 45/00
C 12N 5/00
G 01N 33/53
A 01K 67/00
C 07H 21/04
C 12N 15/00
(23) 04.11.2010.
(30) US 19.01.2006. 761009 P
(86) PCT/US2007001587 19.01.2007.
(96) EP 07749019.1 19.01.2007. En
(87) WO2007094924 23.08.2007. 200734
(97) EP 1993597 26.11.2008. 200848 En
(41) 27.04.2011. 201117
(54) HUMAN TELOMERASE REVERSE TRANSCRIPTASE PEPTIDES
(71) The Regents of the University of California, 1111 Franklin Street, 12th Floor, Oakland, CA 94607, US
(72) ZANETTI, Maurizio, 6112 La Jolla Hermosa Avenue, La Jolla, CA 92037, US;
CORTEZ-GONZALEZ, Xochitl, 3867 Miramar Street, Apt. H, La Jolla, CA 92037, US
(74) Glawe, Delfs, Moll, Patent- und Rechtsanwälte, Rothenbaumchaussee 58, 20148 Hamburg, DE

(51) (8) **EP 2303322 ***
A 61K 39/165
C 12N 15/863
C 07K 14/12
C 12N 7/01
C 12N 5/22
(23) 04.03.2011.
(30) US 20.06.2008. 74406 P
EP 01.07.2008. 08011868
(86) PCT/EP2009004094 08.06.2009.
(96) EP 09765549.2 08.06.2009. En
(87) WO2009152969 23.12.2009. 200952
(97) EP 2303322 06.04.2011. 201114 En
(41) 11.05.2011. 201119
(54) RECOMBINANT MODIFIED VACCINIA VIRUS MEASLES VACCINE
(71) Bavarian Nordic A/S, Hejreskovvej 10 A, 3490 Kvistgaard, DK
(72) CHAPLIN, Paul, Bürgerstrasse 9, 81925 Munich, DE

(51) (7) **EP 1740208 ***
A 61K 39/39
C 12N 15/63
C 07K 16/28
A 61K 39/395
(23) 01.10.2010.
(30) US 23.03.2004. 555396 P
(86) PCT/US2005009787 23.03.2005.
(96) EP 05734923.5 23.03.2005. En
(87) WO2005094879 13.10.2005. 200541
(97) EP 1740208 10.01.2007. 200702 En
(41) 06.04.2011. 201114
(54) MONOCLONAL ANTIBODIES SPECIFIC FOR HUMAN OX40L (CD134L)
(71) Amgen, Inc, One Amgen Center Drive, Thousand Oaks CA 91320, US;
Abgenix, Inc., 6701 Kaiser Drive, Fremont, CA 94555, US
(72) KHARE, Sanjay, D., 5372 Via Pisa, Newbury park, CA 91320, US;
KELLERMANN, Sirid-Aimee, 1000 Almanor Avenue, Menlo Park, CA 94025, US
(74) Campbell, Patrick John Henry, J.A. Kemp & Co., 14 South Square, Gray's Inn, London WC1R 5JJ, GB

(51) (8) **EP 2109461 ***
A 61K 45/06
(23) 02.02.2010.
(30) US 17.07.2006. 831209 P
(86) PCT/IB2007003593 16.07.2007.
(96) EP 07825714.4 16.07.2007. En
(87) WO2008023273 28.02.2008. 200809
(97) EP 2109461 21.10.2009. 200943 En
(41) 06.04.2011. 201114
(54) METHOD FOR IMPROVING PHARMACOKINETICS
(71) Ambrilia Biopharma Inc., 1000, chemin du Golf, Verdun, Quebec H3E 1H4, CA
(72) WU, Jinzi, J., 221 Dali Street, Dollard-des-Ormeaux, Québec H9A 3K3, CA;
GE, Michael, 11-695 Marcel-Laurin, St-Laurent, Québec H4M 2M2, CA;
PANCHAL, Chandra, 303 rue Baffin, Dollard-des-Ormeaux, Québec, H9A 3G4, CA
(74) Harris, Jennifer Lucy, et al, Kilburn & Strode LLP, 20 Red Lion Street, London WC1R 4PJ, GB

(51) (8) **EP 2182986 ***
A 61K 45/06
A 61P 35/00
A 61K 31/337
A 61K 31/4365
A 61K 31/506
A 61K 31/517
A 61K 31/519
(23) 16.09.2010.
(30) US 31.07.2007. 953087 P
US 28.01.2008. 23985 P
(86) PCT/US2008009108 28.07.2008.
(96) EP 08794799.0 28.07.2008. En

(87) WO2009017701 05.02.2009. 200906
(97) EP 2182986 12.05.2010. 201019 En
(41) 16.03.2011. 201111
(54) ANTI-MITOTIC AGENT AND AURORA KINASE INHIBITOR COMBINATION AS ANTI-CANCER TREATMENT
(71) Schering Corporation, 2000 Galloping Hill Road, Kenilworth, NJ 07033, US
(72) BASSO-PORCARO, Andrea, Dawn, 40 Lydia Drive, Guttenberg, NJ 07093, US
(74) van Wezenbeek, Petrus M.G.F., et al, P.O. Box 20, 5340 BH Oss, NL

(51) (7) **EP 1737494 ***
A 61K 47/10
(23) 01.10.2010.
(30) EP 31.03.2004. 04290848
(86) PCT/EP2005003988 30.03.2005.
(96) EP 05729283.1 30.03.2005. En
(87) WO2005094893 13.10.2005. 200541
(97) EP 1737494 03.01.2007. 200701 En
(41) 06.04.2011. 201114
(54) FREEZE-DRIED, FREE-FLOWING, PARTICULATE COMPOSITION HAVING IMPROVED PALATABILITY
(71) CHIESI FARMACEUTICI S.p.A., Via Palermo, 26/A, 43100 Parma, IT
(72) PLOUVIER, Thierry, 20, rue Duguesclin, F-78150 Le Chesnay, FR;
KILHOFFER, Daniel, 8, rue Losey, F-27000 Evreux, FR;
LE PEILLET-FEUILLET, Eliane, 35, rue de Svres, F-92100 Boulogne-Billancourt, FR;
TUBERY, Françoise, 15, rue du Plateau, F-91430 Igny, FR
(74) Minoja, Fabrizio, Bianchetti Bracco Minoja S.r.l., Via Plinio 63, 20129 Milano, IT

(51) (7) **EP 1737496 ***
A 61K 47/48
A 61P 35/00
A 61P 43/00
(23) 03.11.2010.
(30) EP 15.04.2004. 04076161
(86) PCT/IT2005000191 06.04.2005.
(96) EP 05734783.3 06.04.2005. En
(87) WO2005099769 27.10.2005. 200543
(97) EP 1737496 03.01.2007. 200701 En
(41) 04.05.2011. 201118
(54) NOVEL G-CSF CONJUGATES
(71) Nektar Therapeutics, 201 Industrial Road, San Carlos, CA 94070, US
(72) VERONESE, Francesco, Maria, Via Barozzi, 11/b, I-35128 Padova, IT;
BERNA, Manuela, Via Campagna 5, I-31050 Pieve di Soligo, IT
(74) Baldock, Sharon Claire, et al, Boult Wade Tennant, Verulam Gardens, 70 Gray's Inn Road, London WC1X 8BT, GB

(51) (8) **EP 2035042 ***
A 61K 47/48
(23) 27.10.2010.
(30) US 12.06.2006. 813117 P
US 12.06.2006. 813105 P
(86) PCT/US2007071035 12.06.2007.
(96) EP 07853491.4 12.06.2007. En
(87) WO2008036445 27.03.2008. 200813
(97) EP 2035042 18.03.2009. 200912 En
(41) 27.04.2011. 201117
(54) METALLO-HYDROLASE INHIBITORS USING METAL BINDING MOIETIES IN COMBINATION WITH TARGETING MOIETIES
(71) Viamet Pharmaceuticals, Inc., 1822 East NC Highway 54, Suite 150, Durham, NC 27713, US
(72) SCHOTZINGER, Robert, 13304 Ashford Drive, Raleigh, NC 27613, US
(74) Duckworth, Timothy John, et al, J.A. Kemp & Co., 14 South Square, Gray's Inn, London WC1R 5JJ, GB

(51) (8) **EP 2001517 ***
A 61K 48/00
C 07H 21/02
C 07H 21/04
(23) 20.10.2010.
(30) US 31.03.2006. 788561 P
US 28.03.2007. 729341
(86) PCT/US2007007542 29.03.2007.
(96) EP 07754113.4 29.03.2007. En
(87) WO2007126798 08.11.2007. 200745
(97) EP 2001517 17.12.2008. 200851 En
(41) 13.04.2011. 201115
(54) REGULATED EXPRESSION OF RECOMBINANT PROTEINS FROM ADENO-ASSOCIATED VIRAL VECTORS
(71) Cell Genesys Inc., 500 Forbes Boulevard, South San Francisco, CA 94080, US;
ARIAD PHARMACEUTICALS, INC., 26 Landsdowne Street, Cambridge, MA 02139-4234, US
(72) HARDING, Thomas, C., 91 Manchester Street, San Francisco, CA 94110, US;
FANG, Jianmin, 4112 Amaranta Avenue, Palo Alto, CA 94306, US;
RIVERA, Victor, M., 58 Lombard Terrace 2, Arlington, MA 02476, US;
NGUYEN, Minh, 1230 Market Street, 129, San Francisco, CA 94102, US;
CLACKSON, Timothy, P., 3 Locke Lane, Lexington, MA 02420, US;
JOOSS, Karin, 12200 SE 10th Street, Bellevue, WA 98005, US
(74) Roques, Sarah Elizabeth, J.A. Kemp & Co., 14 South Square, Gray's Inn, London WC1R 5JJ, GB

(51) (7) **EP 1740225 ***
A 61K 51/04
A 61K 49/00
C 07D 307/58
C 07D 311/70
C 07D 311/58
C 07C 50/30
C 07D 311/22
A 61K 101/02
(23) 01.11.2010.
(30) US 28.04.2004. 566146 P
US 25.04.2005. 113486
(86) PCT/US2005014459 27.04.2005.
(96) EP 05756378.5 27.04.2005. En

(87) WO2005105159 10.11.2005. 200545
(97) EP 1740225 10.01.2007. 200702 En
(41) 27.04.2011. 201117
(54) CONTRAST AGENTS FOR MYOCARDIAL PERFUSION IMAGING
(71) Lantheus Medical Imaging, Inc., 331 Treble Cove Road, North Billerica, MA 01862, US
(72) RADEKE, Heike, S., 15 Seaver Farm Lane, South Grafton, Massachusetts 01560, US;
CASEBIER, David, S., 161 Ember Lane, Carlisle, Massachusetts 01741, US;
AZURE, Michael, T., 41 Flanders Road, Henniker, New Hampshire 03242, US;
DISCHINO, Douglas, D., 76 Louis Road, Middlefield, Connecticut 06455, US
(74) Howard, Paul Nicholas, et al, Carpmaels & Ransford, One Southampton Row, London, WC1B 5HA, GB

(51) (8) **EP 2121046** *
A 61L 9/04
A 61L 9/12
(23) 11.11.2010.
(30) US 31.01.2007. 898883 P
(86) PCT/US2008001323 31.01.2008.
(96) EP 08725039.5 31.01.2008. En
(87) WO2008094671 07.08.2008. 200832
(97) EP 2121046 25.11.2009. 200948 En
(41) 04.05.2011. 201118
(54) FRAGRANCE DISPENSER
(71) Celeste Industries Corporation, 7978 Industrial Park Road, Easton, MD 21601, US
(72) MARTH, Conroy, Richard, 21519 Skeleton Creek Road, Preston, Maryland 21655, US;
DILL, JR., Ernest, Edmond, 396 Olin Dill Road, Viola, Delaware 19979, US;
THOMPSON, James, Edward, 716 Wayside Avenue, Easton, Maryland 21601, US
(74) Hammler, Martin Franz, et al, Phillips & Leigh, 5 Pemberton Row, London EC4A 3BA, GB

(51) (8) **EP 2133104**
A 61L 9/12
A 47K 10/32
B 65H 75/18
(23) 20.11.2010.
(30) IT 02.03.2006. MO20060075
(96) EP 07003868.2 26.02.2007. It
(97) EP 2133104 16.12.2009. 200951 En
(41) 18.05.2011. 201120
(54) Core for Rolls
(71) Cartiera Lucchese S.p.A., Via Ciarpi, 77, 55016 Porcari LU, IT
(72) Pasquini, Sandro, Via San Nicolao, 47, 55100 Lucca, IT; The other inventor has agreed to waive his entitlement to designation.
(74) Brogi, Graziano, APTA S.r.l., Piazza dei Martiri 1, 40121 Bologna, IT

(51) (8) **EP 1833528** *
A 61M 1/00
(23) 03.08.2010.
(30) US 04.01.2005. 641570 P
(86) PCT/US2006000208 03.01.2006.
(96) EP 06717416.9 03.01.2006. En
(87) WO2006074242 13.07.2006. 200628
(97) EP 1833528 19.09.2007. 200738 En
(41) 30.03.2011. 201113
(54) INJECTION APPARATUS HAVING A PLURALITY OF STOPPERS
(71) Artes Medical, Inc., 5870 Pacific Center Boulevard, San Diego, CA 92121, US
(72) ANDERSON, Russell, 5870 Pacific Center Blvd., San Diego, California 92121, US
(74) Draper, Martyn John, Boult Wade Tennant, Verulam Gardens, 70 Gray's Inn Road, London WC1X 8BT, GB

(51) (8) **EP 2195077** *
A 61N 1/00
(23) 12.02.2011.
(30) US 21.09.2007. 974121 P
(86) PCT/US2008076968 19.09.2008.
(96) EP 08831985.0 19.09.2008. En
(87) WO2009039344 26.03.2009. 200913
(97) EP 2195077 16.06.2010. 201024 En
(41) 23.03.2011. 201112
(54) TREATMENT OF MIGRAINE HEADACHES USING ANTIESTROGENS
(71) Fisch, Harry, 30 Springdale Road, Scarsdale, NY 10583, US
(72) Fisch, Harry, 30 Springdale Road, Scarsdale, NY 10583, US
(74) Dinné, Erlend, Hardenbergstrasse 11, D-22587 Hamburg, DE

(51) (8) **EP 1911490**
A 61N 1/36
A 61N 1/04
A 61N 1/05
(23) 07.04.2011.
(30) JP 04.08.2005. 2005227125
(86) PCT/JP2006314191 18.07.2006.
(96) EP 06781204.0 18.07.2006. Ja
(87) WO2007015368 08.02.2007. 200706
(97) EP 1911490 16.04.2008. 200816 En
(41) 18.05.2011. 201120
(54) SLEEP DISORDER TREATING DEVICE AND SLEEP DISORDER TREATING METHOD
(71) Lintec Corporation, 23-23 Honcho Itabashi-ku, Tokyo 173-0001, JP
(72) YAMAGUCHI, Hiroshi, c/o LINTEC CORPORATION, 23-23, Honcho, Itabashi-ku, Tokyo 1730001, JP;
SASAKI, Hidemi, c/o FES Co., Ltd., 3-2-26, Honcho, Aoba-ku, Sendai-shi, Miyagi 9800014, JP;
SUZUKI, Kenji, c/o FES Co., Ltd., 3-2-26, Honcho, Aoba-ku, Sendai-shi, Miyagi 9800014, JP;
ENDO, Masakazu, c/o FES Co., Ltd., 3-2-26, Honcho, Aoba-ku, Sendai-shi, Miyagi 9800014, JP;
MORISHITA, Daisaburo, c/o FES Co., Ltd., 3-2-26, Honcho, Aoba-ku, Sendai-shi, Miyagi 9800014, JP;
HANDA, Yasunobu, 5-7-6, Sakura, Iwanuma-shi, Miyagi 9892433, JP
(74) Nicholls, Michael John, et al, J.A. Kemp & Co., 14 South Square, Gray's Inn, London, WC1R 5JJ, GB

(51) (7) **EP 1690323 ***
A 61N 5/00
A 61N 1/00
(23) 29.10.2010.
(30) US 02.12.2003. 526436 P
WO 02.06.2004. PCT/US2004/017081
(86) PCT/US2004040724 02.12.2004.
(96) EP 04813099.1 02.12.2004. En
(87) WO2005057738 23.06.2005. 200525
(97) EP 1690323 16.08.2006. 200633 En
(41) 11.05.2011. 201119
(54) METHOD OF MODULATING LASER-ACCELERATED PROTONS FOR RADIATION THERAPY
(71) FOX CHASE CANCER CENTER, 7701 Burholme Avenue, Philadelphia, Pennsylvania 19111, US
(72) MA, Chang-Ming, 1857 Nicholas Drive, Huntington Valley, PA 19115, US;
FOURKAL, Eugene S., 1801 Winchester Avenue, Apartment D12, Philadelphia, PA 19115, US
(74) Ackroyd, Robert, W.P. Thompson & Co., 55 Drury Lane, London, WC2B 5SQ, GB

(51) (8) **EP 1924324 ***
A 61N 5/10
A 61B 19/00
(23) 19.10.2010.
(30) EP 04.08.2005. 05291664
(86) PCT/EP2006007762 04.08.2006.
(96) EP 06776632.9 04.08.2006. En
(87) WO2007017211 15.02.2007. 200707
(97) EP 1924324 28.05.2008. 200822 En
(41) 20.04.2011. 201116
(54) METHOD AND APPARATUS FOR APPLYING RADIOTHERAPY
(71) Institut Curie, 26, rue d'Ulm, 75005 Paris, FR
(72) FERRAND, Régis, 7, rue des Condamines, F-78000 Versailles, FR;
MEYRONEINC, Samuel, L105, 26, rue du Commandant Mouchotte, F-75014 Paris, FR;
MAMMAR, Hamid, 91, allée de la Pointe Gente, F-91190 Gif-sur-Yvette, FR;
ROSENWALD, Jean-Claude, 4, avenue Vial, F-94400 Vitry-sur-Seine, FR;
MAZAL, Alejandro, 9, rue Pierre Semard, F-94400 Vitry-sur-Seine, FR
(74) Pontet, Bernard, et al, Pontet Allano & Associés s.e.l.a.r.l., 25, Rue Jean Rostand, Parc Club Orsay Université, 91893 Orsay Cedex, FR

(51) (8) **EP 1827606 ***
A 61P 35/00
A 61K 31/00
(23) 30.11.2010.
(30) US 06.12.2004. 633587 P
(86) PCT/US2005044231 06.12.2005.
(96) EP 05853218.5 06.12.2005. En
(87) WO2006063033 15.06.2006. 200624
(97) EP 1827606 05.09.2007. 200736 En
(41) 18.05.2011. 201120
(54) ARYL AMIDE SPHINGOSINE 1-PHOSPHATE ANALOGS
(71) UNIVERSITY OF VIRGINIA PATENT FOUNDATION, 250 West Main Street, Suite 300, Charlottesville, VA 22902, US
(72) LYNCH, Kevin, R., 1632 Meadowbrook Heights Road, Charlottesville, Virginia 22901, US;
MACDONALD, Timothy, L., 200 Douglas Avenue, Unit 3b, Charlottesville, Virginia 22902, US;
CLEMENS, Jeremy, J., 38 Eberling Drive, New City, NY 10956, US;
DAVIS, Michael, D., 13908 Saratoga Avenue, Laurel, Maryland 20707, US
(74) McNab, Donald C., et al, Marks & Clerk LLP, Aurora, 120 Bothwell Street, Glasgow, G2 7JS, GB

(51) (8) **EP 1863571 ***
A 61P 35/00
A 61K 31/4743
C 07D 495/04
(23) 01.10.2010.
(30) US 09.03.2005. 660134 P
(86) PCT/US2006008150 07.03.2006.
(96) EP 06737332.4 07.03.2006. En
(87) WO2006098962 21.09.2006. 200638
(97) EP 1863571 12.12.2007. 200750 En
(41) 06.04.2011. 201114
(54) COMPOUNDS FOR INHIBITING KSP KINESIN ACTIVITY
(71) Schering Corporation, 2000 Galloping Hill Road, Kenilworth, NJ 07033-0530, US
(72) TAGAT, Jayaraman R., 133 Boynton Court, Westfield, NJ 07090, US;
GUZI, Timothy J., 48 Red Road, Chatham, NJ 07928, US;
LABROLI, Marc, 1405 Augusta Circle, Mount Laurel, NJ 08054, US;
POKER, Cory, 61-C Forest Drive, Springfield, NJ 07081, US;
KEREKES, Angela D., 2605 Elizabeth Avenue, Scotch Plains, NJ 07076, US;
YU, Tao, 15 Ballo Place, Edison, NJ 08820, US;
TSUI, Hon-Chung, 41 Cortland Drive, East Brunswick, NJ 08816, US;
SHIH, Neng-Yang, 4 Overlook Drive, Warren, NJ 07059, US;
XIAO, Yushi, 12 Koster Boulevard 6B, Edison, NJ 08837, US;
PALIWAL, Sunil, 5 Golf View Court, Monroe Township, NJ 08831, US
(74) UEXKÜLL & STOLBERG, Patentanwälte, Beselerstrasse 4, 22607 Hamburg, DE

(51) (8) **EP 1835974 ***
B 01D 11/02
B 01J 3/02
B 01J 8/00
C 11B 1/10
(23) 30.09.2010.
(86) PCT/US2004041646 14.12.2004.
(96) EP 04813899.4 14.12.2004. En
(87) WO2006065236 22.06.2006. 200625
(97) EP 1835974 26.09.2007. 200739 En
(41) 30.03.2011. 201113
(54) METHOD AND APPARATUS FOR REMOVING SOLUTE FROM A SOLID SOLUTE-BEARING PRODUCT
(71) EPIC Oil Extractors, LLC., 7967 Office Park Boulevard, Baton Rouge, LA 70809, US

(72) DARRELL, Phillips, J., 4698 Highway 19, Zachary, LA 70791, US;
RUSSELL, George, B., 7553 North Jefferson Place Circle, Baton Rouge, LA 70809, US
(74) Rupprecht, Kay, et al, Meissner, Bolte & Partner GbR, Widenmayerstraße 48, 80538 München, DE

(51) (8) **EP 1957175 ***
B 01D 24/24
B 01D 46/52
(23) 10.11.2010.
(30) IT 29.11.2005. RE20050134
(86) PCT/EP2006009772 10.10.2006.
(96) EP 06806147.2 10.10.2006. En
(87) WO2007062715 07.06.2007. 200723
(97) EP 1957175 20.08.2008. 200834 En
(41) 04.05.2011. 201118
(54) FILTERING SYSTEM FOR THE AIR DIRECTED TOWARDS AN INTERNAL COMBUSTION ENGINE INTAKE
(71) UFI Filters S.p.A., Via Europa, 26, I-46047 Porto Mantovano, IT
(72) GIRONDI, Giorgio, Vicolo Carbone, 14, I-46100 Mantova, IT
(74) Corradini, Corrado, et al, Ing. C. Corradini & C. S.r.l., Via Dante Alighieri 4, 42100 Reggio Emilia, IT

(51) (8) **EP 1776174 ***
B 01D 61/00
C 12N 1/00
C 12N 1/02
B 01D 61/58
(23) 10.11.2010.
(30) US 21.06.2004. 871261
(86) PCT/US2005021781 21.06.2005.
(96) EP 05768196.7 21.06.2005. En
(87) WO2006007459 19.01.2006. 200603
(97) EP 1776174 25.04.2007. 200717 En
(41) 04.05.2011. 201118
(54) USE OF DEPTH FILTRATION IN SERIES WITH CONTINUOUS CENTRIFUGATION TO CLARIFY MAMMALIAN CELL CULTURES
(71) Biogen Idec MA Inc., 14 Cambridge Center, Cambridge, MA 02142, US
(72) PHAM, Christine, Y., 14539 Arroyo Hondo, San Diego, CA 92127, US;
THÖMMES, Jörg, 4299 Corte de Sausalito, San Diego, CA 92130, US
(74) Adams, Harvey Vaughan John, et al, Mathys & Squire LLP, 120 Holborn, London, EC1N 2SQ, GB

(51) (8) **EP 1874481 ***
B 05B 1/30
B 05B 1/02
B 65D 83/16
B 05B 12/02
(23) 18.11.2010.
(30) FR 28.04.2005. 0504319
FR 31.03.2006. 0602833
(86) PCT/FR2006000968 28.04.2006.
(96) EP 06764573.9 28.04.2006. Fr
(87) WO2006114533 02.11.2006. 200644
(97) EP 1874481 09.01.2008. 200802 Fr
(41) 18.05.2011. 201120
(54) DEVICE FOR APPLYING A FLUID TO AN AREA TO BE TREATED, COMPRISING A TIMING SYSTEM
(71) PERSEE MEDICA, 6, Parc des Fontenelles, route de Fontenay, 78870 Bailly, FR
(72) MARIN, Denis, 11, avenue de la Ch?taigneraie, F-78870 Bailly, FR;
SONIE, Serge, 70 Chemin Mont-Bouis, F-14600 La Riviere Saint Sauveur, FR
(74) Novagraaf Technologies, 122 rue Edouard Vaillant, 92593 Levallois-Perret Cedex, FR

(51) (8) **EP 2148750 ***
B 21D 5/14
(23) 12.10.2010.
(86) PCT/IT2007000121 21.02.2007.
(96) EP 07736642.5 21.02.2007. En
(87) WO2008102388 28.08.2008. 200835
(97) EP 2148750 03.02.2010. 201005 En
(41) 06.04.2011. 201114
(54) APPARATUS FOR BENDING PLATES WITH ROLLS
(71) Boldrini S.p.a., Via Gaetano Crespi 28, 20134 Milano, IT
(72) BOLDRINI, Rino, Lorenzo, Via kolbe Padre Massimiliano 12, I-20137 Milano, IT
(74) Tansini, Elio Fabrizio, BUGNION S.p.A., Viale Lancetti 17, 20158 Milano, IT

(51) (8) **EP 1877213 ***
B 22D 41/18
(23) 18.09.2010.
(30) US 03.05.2005. 120181
(86) PCT/GB2006001447 20.04.2006.
(96) EP 06726837.5 20.04.2006. En
(87) WO2006117508 09.11.2006. 200645
(97) EP 1877213 16.01.2008. 200803 En
(41) 30.03.2011. 201113
(54) TUNDISH STOPPER ROD FOR CONTINUOUS MOLTEN METAL CASTING
(71) FOSECO INTERNATIONAL LIMITED, Coleshill Road, Fazeley, Tamworth, Staffordshire B78 3TL, GB
(72) MORALES, Rodolfo, Davila, Bohemia 9 No. 15, Bosques Del Lago, CUAUTI-Estado de Mexico, MX;
GARCIA, Lino, Demedices, Calle 26 No. 56, Col. Guadalupe-Proletaria, C P 076070, MX
(74) Ward, David Ian, Marks & Clerk LLP, Alpha Tower, Suffolk Street, Queensway, Birmingham, B1 1TT, GB

(51) (8) **EP 2091696 ***
B 25G 1/00
B 25G 1/10
A 01B 1/02
(23) 29.09.2010.
(30) AU 11.12.2006. 2006906890 P
AU 15.02.2007. 2007900734 P
AU 05.06.2007. 2007202569
(86) PCT/AU2007001896 11.12.2007.
(96) EP 07845338.8 11.12.2007. En
(87) WO2008070903 19.06.2008. 200825
(97) EP 2091696 26.08.2009. 200935 En
(41) 16.03.2011. 201111
(54) AUXILIARY HANDLE FOR A TOOL

(71) Trott, John Garry, 13 Ahmat Street, Woolner NT 0820, AU
(72) Trott, John Garry, 13 Ahmat Street, Woolner NT 0820, AU
(74) Gee, Steven William, D.W. & S.W. GEE, 1 South Lynn Gardens, London Road, Shipston on Stour, Warwickshire CV36 4ER, GB

(51) (8) **EP 2113346**
B 26B 5/00
(23) 21.10.2010.
(30) US 02.05.2008. 114234
(96) EP 08163435.4 01.09.2008. En
(97) EP 2113346 04.11.2009. 200945 En
(41) 13.04.2011. 201115
(54) Retractable utility knife
(71) Olympia Tools International, Inc, 18051 Arenth Avenue, City of Industry, CA 91748, US
(72) De, Huang Yuan, No. 17, Yudong Road, Yangdong County, Yangjiang City, Guangdong, CN
(74) Solf, Alexander, Patentanwälte Dr. Solf & Zapf, Candidplatz 15, 81543 München, DE

(51) (8) **EP 2040907 ***
B 29C 65/00
E 04F 15/16
(23) 17.09.2010.
(30) US 11.07.2006. 456747
(86) PCT/US2007073242 11.07.2007.
(96) EP 07799478.8 11.07.2007. En
(87) WO2008008824 17.01.2008. 200803
(97) EP 2040907 01.04.2009. 200914 En
(41) 30.03.2011. 201113
(54) INSTALLATION METHOD FOR NON-SLIP SANITARY FLOORING
(71) Martin, Joel E., 4148 Moorland Drive, Charlotte, NC 28226, US
(72) NEALE, Richard, C., III, 285 Steeple Pointe Drive, Roswell, GA 30076, US
(74) Bauer Vorberg Kayser, Patentanwälte, Goltsteinstrasse 87, 50968 Köln, DE

(51) (8) **EP 1831006 ***
B 32B 1/00
B 32B 1/02
B 32B 1/08
B 65D 1/40
B 65D 23/10
(23) 21.09.2010.
(30) US 22.11.2004. 994445
(86) PCT/US2005019062 31.05.2005.
(96) EP 05754659.0 31.05.2005. En
(87) WO2006057668 01.06.2006. 200622
(97) EP 1831006 12.09.2007. 200737 En
(41) 20.04.2011. 201116
(54) PLASTIC ARTICLE
(71) Plastipak Packaging Inc., 41605 Ann Arbor Road, Plymouth, MI 48170, US
(72) KITZMILLER, Michael, Charles, 11502 State Route 364, Ft. Loramie, OH 45845, US
(74) Weiss, Peter, Dr. Weiss & Arat, Zeppelinstrasse 4, 78234 Engen, DE

(51) (8) **EP 1859929**
B 32B 5/18
B 32B 27/12
B 60N 2/58
B 61D 33/00
(23) 17.03.2011.
(30) DE 22.05.2006. 202006008222 U
DE 21.06.2006. 202006009789 U
(96) EP 07008492.6 26.04.2007. De
(97) EP 1859929 28.11.2007. 200748 De
(41) 27.04.2011. 201117
(54) Composite sheet made of a soft elastic foam plastic sheet and a knitted fabric sheet
(71) Mattes & Ammann GmbH & Co. KG, Brühlstrasse 8, 72436 Messstetten (Tieringen), DE
(72) Larsén, Christoph Sven, Nackstrasse 34, 72469 Messstetten-Tieringen, DE
(74) Raffay & Fleck, Patentanwälte, Grosse Bleichen 8, 20354 Hamburg, DE

(51) (8) **EP 2262646 ***
B 41M 3/14
B 42D 15/00
B 42D 15/10
(23) 08.04.2011.
(30) GB 08.02.2008. 0802421
(86) PCT/GB2009000242 29.01.2009.
(96) EP 09708531.0 29.01.2009. En
(87) WO2009098435 13.08.2009. 200933
(97) EP 2262646 22.12.2010. 201051 En
(41) 18.05.2011. 201120
(54) SUBSTRATE FOR SECURITY DOCUMENT
(71) De La Rue International Limited, De La Rue House, Jays Close, Viables, Basingstoke Hampshire RG22 4BS, GB
(72) ROST, Stuart, William, 37 Kenilworth Road, Fleet, Hampshire GU51 3AX, GB;
WINCHCOMBE, John, Philip, Little Holt, Goodworth Clatford, Andover, Hampshire SP11 7RF, GB;
EASTELL, Christopher, John, 11 Rodway, Wanborough, Swindon SN4 0TN, GB
(74) Skone James, Robert Edmund, Gill Jennings & Every LLP, The Broadgate Tower, 20 Primrose Street, London EC2A 2ES, GB

(51) (8) **EP 1980465**
B 61B 12/02
(23) 01.10.2010.
(30) FR 27.03.2007. 0702216
(96) EP 08354018.7 07.03.2008. Fr
(97) EP 1980465 15.10.2008. 200842 Fr
(41) 30.03.2011. 201113
(54) Mechanical device for guiding an overhead cable of a mechanical ski lift and method of using same
(71) Pomagalski, 109, rue Aristide Bergs, 38340 Voreppe, FR
(72) Souchal, Jean, 19 rue Augereau, 38000 Grenoble, FR;
Triolier, Thierry, 336 avenue Jules Ravat, 38500 Voiron, FR
(74) Hecké, Gérard, et al, Cabinet Hecké, 10 rue d'Arménie - Europole, BP 1537, 38025 Grenoble Cedex 1, FR

(51) (8) **EP 2161208**
B 65D 21/02
B 65D 21/06
(23) 20.10.2010.

(30) DE 09.09.2008. 102008046468
(96) EP 09010336.7 11.08.2009. De
(97) EP 2161208 10.03.2010. 201010 De
(41) 13.04.2011. 201115
(54) Storage box
(71) Allit AG Kunststofftechnik, Rotlay-Mühle, 55545 Bad Kreuznach, DE
(72) Kallinowsky, Hans, Rotlay-Mühle, 55545 Bad Kreuznach, DE
(74) Schneider, Peter Christian, Fiedler, Ostermann & Schneider, Patentanwälte, Obere Karspüle 41, 37073 Göttingen, DE

(51) (7) **EP 1584569**
B 65D 25/36
B 65D 77/04
B 65D 1/36
(23) 10.11.2010.
(30) DE 06.04.2004. 202004005446 U
(96) EP 05006276.9 22.03.2005. De
(97) EP 1584569 12.10.2005. 200541 De
(41) 11.05.2011. 201119
(54) Packaging tray with outer cover
(71) Intersnack Knabber-Gebäck GmbH & Co. KG, Aachener Strasse 1042, 50858 Köln, DE
(72) Veit, Wolfgang, Am Schrickenhof 31, 52428 Jülich, DE
(74) Becker Kurig Straus, Patentanwälte, Bavariastrasse 7, 80336 München, DE

(51) (8) **EP 1853509** *
B 67B 1/04
B 65D 39/00
(23) 01.09.2010.
(30) EP 24.02.2005. 05004005
(86) PCT/EP2006001554 21.02.2006.
(96) EP 06707129.0 21.02.2006. De
(87) WO2006089711 31.08.2006. 200635
(97) EP 1853509 14.11.2007. 200746 De
(41) 30.03.2011. 201113
(54) BOTTLE CLOSURE
(71) Hiss, Ludwig, Eisenbahnstrasse 1, 79346 Endingen, DE
(72) Hiss, Ludwig, Eisenbahnstrasse 1, 79346 Endingen, DE

(51) (8) **EP 2029484** *
C 01F 7/02
C 01F 7/18
C 08K 3/22
C 09K 21/02
(23) 21.10.2010.
(30) US 21.06.2006. 815426 P
US 21.06.2006. 815515 P
US 05.07.2006. 818632 P
US 12.02.2007. 889316 P
(86) PCT/IB2007002314 21.06.2007.
(96) EP 07789624.9 21.06.2007. En
(87) WO2007148226 27.12.2007. 200752
(97) EP 2029484 04.03.2009. 200910 En
(41) 13.04.2011. 201115
(54) THERMALLY STABLE ALUMINUM TRIHYDROXIDE PARTICLES PRODUCED BY SPRAY DRYING WITH SUBSEQUENT DRY-MILLING AND THEIR USE
(71) Martinswerk GmbH, Kölner Strasse 110, 50127 Bergheim, DE
(72) HERBIET, Rene, Gabriel, Erich, Stendrich 150, 4700 Eupen, BE;
PUETZ, Norbert, Wilhelm, Mehmelerstrasse 1, 50129 Niederaubem, DE;
HEIM, Ingo, Uwe, Marienweg 42, 50226 Frechen, DE;
TOEDT, Winfried, Zum Killenberg 15, 54597 Steffein-Auel, DE;
LINEK, Dagmar, Fuchsweg 36, 50859 Koeln, DE;
KELLER, Volker, Ernst, Willi, Waldstrasse 2g, 50226 Frechen, DE
(74) UEXKÜLL & STOLBERG, Patentanwälte, Beselerstrasse 4, 22607 Hamburg, DE

(51) (7) **EP 1740507** *
C 02F 11/00
C 02F 1/58
C 02F 1/68
C 02F 1/42
B 09C 1/08
E 01H 12/00
E 01H 15/00
C 01B 33/38
C 01B 33/40
(23) 01.10.2010.
(30) AU 10.03.2004. 2004901229
CN 30.03.2004. 200410035210
(86) PCT/AU2005000332 09.03.2005.
(96) EP 05706357.0 09.03.2005. En
(87) WO2005085142 15.09.2005. 200537
(97) EP 1740507 10.01.2007. 200702 En
(41) 16.03.2011. 201111
(54) IMPROVED MODIFIED SUBSTRATE FOR REMOVING AQUEOUS OXYANIONS
(71) Phoslock Technologies Pty Ltd, 116 Rothschild Avenue, Rosebery NSW 2018, AU
(72) FOUAD, Hagseresht, Integrated Mineral Technology, Unit 2, 62 Secam Street, Mansfield, QLD 4122, AU
(74) Lax, Monica Ingeborg, Kolster Oy Ab, Iso Roobertinkatu 23, P.O. Box 148, 00121 Helsinki, FI

(51) (8) **EP 2004559** *
C 03B 5/26
C 03B 37/08
(23) 13.11.2010.
(30) UA 05.04.2006. 2006003737
(86) PCT/AT2007000155 05.04.2007.
(96) EP 07718372.1 05.04.2007. De
(87) WO2007112471 11.10.2007. 200741
(97) EP 2004559 24.12.2008. 200852 De
(41) 04.05.2011. 201118
(54) PRODUCTION PROCESS FOR CONTINUOUS MINERAL FIBRES
(71) LLC Centre Competence "Basalt", St. Ponomariova, 7, Kyiv region, UA 08298 Kotsubinskoe, UA
(72) MEDVYEDYEV, Taras Oleksandrovich, ul. Uborevicha, 19a, Kyiv, 03179, UA;
TSYBULYA, Yury Lvovich, ul. Shevchenko 5, S. Moschun, Kievo-Svyatoshinsky, Kievskaya obl., 08106, UA
(74) Patentanwälte, Zellentin & Partner, Rubensstrasse 30, 67061 Ludwigshafen, DE

(51) (8) **EP 1812374** *
C 07C 69/60
A 61K 31/28
A 61P 17/06
(23) 10.11.2010.
(30) DK 10.11.2004. 200401735
DK 11.02.2005. 200500212
DK 23.03.2005. 200500420
US 16.06.2005. 691511 P
(86) PCT/DK2005000717 09.11.2005.
(96) EP 05800741.0 09.11.2005. En
(87) WO2006050730 18.05.2006. 200620
(97) EP 1812374 01.08.2007. 200731 En
(41) 11.05.2011. 201119
(54) NOVEL SALTS OF FUMARIC ACID MONOALKYLESTERS AND THEIR PHARMACEUTICAL USE
(71) Aditech Pharma AG, c/o Domanda Verwaltungs GmbH, Baarerstrasse 43, 6300 Zug, CH
(72) NILSSON, Henrik, Cort Adelersgade 4, st.th., DK-1053 Copenhagen, DK;
ANDERSEN, Jens, E.T., Kohavevej 28, DK-2950 Vedbæk, DK;
MÜLLER, Bernd, W., Schlotfeldtsberg 14a, D-24220 Flintbek, DE;
ROBINSON, Joseph, R., 41 Chequamegon Bay, Madison, WI 53719, US
(74) Inspicos A/S, Kogle Allé 2, P.O. Box 45, 2970 Hørsholm, DK

(51) (8) **EP 2008993**
C 07C 233/18
C 07C 231/24
A 61K 31/165
A 61P 25/00
A 61P 37/00
A 61P 15/08
A 61P 9/00
A 61P 3/00
(23) 13.11.2010.
(30) FR 03.08.2005. 0508276
(96) EP 08017458.4 02.08.2006. Fr
(97) EP 2008993 31.12.2008. 200901 Fr
(41) 20.04.2011. 201116
(54) New crystalline form III of agomelatine, method of preparing same and pharmaceutical compositions containing same
(71) Les Laboratoires Servier, 12, Place de La Défense, 92415 Courbevoie Cedex, FR
(72) Coquerel, Gérard, 192, rue de l'Eglise, 76520 Boos, FR; Linol, Julie, 15, av. Chastellain, Appt. 180, 76000 Rouen, FR; Souvie, Jean-Claude, Rés. Garden Park, 19, av. Norman Prince, 64000 Pau, FR

(51) (7) **EP 2314567**
C 07C 233/76
C 07C 311/14
C 07D 213/81
C 07D 213/82
C 07D 333/38
C 07D 295/155
A 61P 19/02
A 61P 29/00
A 61P 11/06
A 61K 31/167
A 61K 31/381
A 61K 31/44
A 61K 31/445
(23) 04.04.2011.
(96) EP 09173872.4 23.10.2009. En
(97) EP 2314567 En
(41) 18.05.2011. 201120
(54) Inhibitors of the microsomal prostaglandin E2 synthase-1
(71) Boehringer Ingelheim International GmbH, Binger Strasse 173, 55216 Ingelheim am Rhein, DE
(72) The designation of the inventor has not yet been filed
(74) Hammann, Heinz, et al, Boehringer Ingelheim GmbH, CD-Patents, Binger Straße 173, 55216 Ingelheim am Rhein, DE

(51) (8) **EP 1924554** *
C 07C 311/21
C 07D 233/32
A 61K 31/18
A 61K 31/4166
C 07D 207/34
C 07D 213/50
C 07D 233/61
C 07D 261/08
C 07D 261/10
C 07D 263/32
C 07D 295/13
C 07D 295/192
A 61K 31/215
A 61K 31/27
A 61K 31/277
A 61K 31/401
A 61K 31/417
A 61K 31/42
A 61K 31/421
A 61K 31/4409
A 61K 31/5375
(23) 27.11.2010.
(30) FI 16.09.2005. 20055498
(86) PCT/FI2006050395 15.09.2006.
(96) EP 06820086.4 15.09.2006. En
(87) WO2007034035 29.03.2007. 200713
(97) EP 1924554 28.05.2008. 200822 En
(41) 18.05.2011. 201120
(54) SULPHONAMIDE DERIVATIVES
(71) Biotie Therapies Corp., Tykistökatu 6, 20520 Turku, FI
(72) HEINO, Jyrki, Pampinkatu 3, FI-20900 Turku, FI;
JOHNSON, Mark, Arvinkatu 6 B 1-2, FI-20100 Turku, FI;
KÄPYLÄ, Jarmo, Kiurunkatu 1 E 38, FI-20760 Piispanristi, FI;
MARJAMÄKI, Anne, Käpäläkuja 7, FI-20660 Littoinen, FI;

NYRÖNEN, Tommi, Vanajantie 9-11, 3, FI-00510 Helsinki, FI;
OJALA, Marika, Isohaantie 19, FI-21290 Rusko, FI;
PENTIKÄINEN, Olli, Viljontie 18, 40800 Vaajakoski, FI;
PIHLAVISTO, Marjo, Kuminakatu 10, FI-20780 Kaarina, FI;
NISSINEN, Liisa, Papinsalmenkatu 35, 20900 Turku, FI
(74) Syvänen, Ralf Ossian, et al, Oy Kolster Ab, Iso Roobertinkatu 23, P.O. Box 148, 00121 Helsinki, FI

(51) (8) **EP 2079687** *
C 07D 209/14
C 07D 209/80
(23) 01.07.2010.
(30) US 18.12.2006. 870594 P
(86) PCT/US2007088011 18.12.2007.
(96) EP 07869463.5 18.12.2007. En
(87) WO2008077079 26.06.2008. 200826
(97) EP 2079687 22.07.2009. 200930 En
(41) 23.03.2011. 201112
(54) COMPOSITIONS CONTAINING, METHODS INVOLVING, AND USES OF NON-NATURAL AMINO ACIDS AND POLYPEPTIDES
(71) Ambrx, Inc., 10975 North Torrey Pines Road, Suite 100, La Jolla CA 92037, US
(72) MIAO, Zhenwei, 15887 Sunnyfield Place, San Diego, California 92127, US;
LIU, Junjie, 5004 Field Street, San Diego, California 92110, US
(74) Mercer, Christopher Paul, et al, Carpmaels & Ransford, One Southampton Row, London, WC1B 5HA, GB

(51) (8) **EP 1844013** *
C 07D 209/42
C 07D 401/04
A 61K 31/404
A 61P 11/00
A 61P 29/00
C 07D 405/12
C 07D 401/12
C 07D 401/14
(23) 09.11.2010.
(30) US 19.01.2005. 644553 P
US 19.01.2005. 644554 P
(86) PCT/GB2005004978 22.12.2005.
(96) EP 05823716.5 22.12.2005. En
(87) WO2006077364 27.07.2006. 200630
(97) EP 1844013 17.10.2007. 200742 En
(41) 11.05.2011. 201119
(54) INDOLES USEFUL IN THE TREATMENT OF INFLAMMATION
(71) Biolipox AB, Berzelius väg 3, plan 5, 171 65 Solna, SE
(72) PELCMAN, Benjamin, Biolipox AB, Berzelius väg 3, plan 5, S-171 65 Solna, SE;
OLOFSSON, Kristofer, Biolipox AB, Berzelius väg 3, plan 5, S-171 65 Solna, SE;
KATKEVICS, Martins, Latvian Inst. of Org. Synth., 21 Aizkraukles Str., LV-1006 Riga, LV;
OZOLA, Vita, Latvian Inst. of Org. Synth., 21 Aizkraukles Str., LV-1006 Riga, LV;
SUNA, Edgars, Latvian Inst. of Org. Synth., 21 Aizkraukles Str., 1006 Riga, LV;
KALVINS, Ivars, Latvian Inst. of Org. Synth., 21 Aizkraukles Str., 1006 Riga, LV;
TRAPENCIERIS, Peteris, Latvian Inst. of Org. Synth., 21 Aizkraukles Str., 1006 Riga, LV
(74) McNeeney, Stephen Phillip, Potter Clarkson LLP, Park View House, 58 The Ropewalk, Nottingham, NG1 5DD, GB

(51) (8) **EP 2173715** *
C 07D 211/58
C 07D 401/12
C 07D 409/12
C 07D 413/12
C 07D 417/12
A 61K 31/445
A 61K 31/4523
A 61K 31/4535
A 61K 31/454
A 61K 31/4545
A 61P 11/00
A 61P 17/00
A 61P 19/00
A 61P 29/00
(23) 25.11.2010.
(30) EP 13.07.2007. 07112467
US 13.07.2007. 959580
(86) PCT/EP2008059137 11.07.2008.
(96) EP 08756797.0 11.07.2008. En
(87) WO2009010478 22.01.2009. 200904
(97) EP 2173715 14.04.2010. 201015 En
(41) 18.05.2011. 201120
(54) USE OF PIPERIDINE DERIVATIVES AS AGONISTS OF CHEMOKINE RECEPTOR ACTIVITY
(71) Euroscreen S.A., Route de Lennik 802, 1070 Brussels, BE
(72) HUCK, Jacques, Le Clos du Président, Avenue Georges Pompidou, 38, 69003 Lyon, FR;
OOMS, Frédéric, Rue Jean le Brasseur nr 8, 4280 Hannut, BE;
TYRCHAN, Christian, Högkullev 33, 437 34 Lindome, SE;
HOVEYDA, Hamid R., Rue Berkendael, 124, 1050 Bruxelles, BE
(74) Cabinet Plasseraud, 52, rue de la Victoire, 75440 Paris Cedex 09, FR

(51) (8) **EP 1851202** *
C 07D 213/55
C 07D 213/56
C 07D 401/12
C 07D 413/12
C 07D 405/12
C 07D 409/12
C 07D 417/12
C 07D 401/14
A 61P 3/08
A 61K 31/44
A 61K 31/4427
(23) 01.09.2010.
(30) JP 25.02.2005. 2005052018
(86) PCT/JP2006304177 24.02.2006.
(96) EP 06715236.3 24.02.2006. En
(87) WO2006090915 31.08.2006. 200635
(97) EP 1851202 07.11.2007. 200745 En
(41) 30.03.2011. 201113
(54) PYRIDYL ACETIC ACID COMPOUNDS
(71) Takeda Pharmaceutical Company Limited, 1-1, Doshomachi 4-chome, Chuo-ku, Osaka-shi, Osaka 541-0045, JP

(72) MAEZAKI, H., TAKEDA PHARMACEUTICAL COMPANY LIMITED, 17-85, Jusohonmachi 2-chome, Yodogawa-ku, Osaka-shi, Osaka, 5328686, JP;
SUZUKI, Nobuhiro, TAKEDA PHARMACEUTICAL COMPANY LIMITED, 10, Wadai, Tsukuba-shi, Ibaraki, 3004293, JP
(74) Jones, Nicholas Andrew, Withers & Rogers LLP, Goldings House, 2 Hays Lane, London, SE1 2HW, GB

(51) (8) **EP 1879864** *
C 07D 213/89
C 07D 241/10
C 07D 239/24
C 07D 215/60
A 61K 31/444
A 61P 7/02
(23) 30.09.2010.
(30) US 20.04.2005. 673131 P
(86) PCT/US2006010581 21.03.2006.
(96) EP 06739397.5 21.03.2006. En
(87) WO2006115652 02.11.2006. 200644
(97) EP 1879864 23.01.2008. 200804 En
(41) 30.03.2011. 201113
(54) FLUORINATED PYRIDINE N-OXIDE THROMBIN MODULATORS AND PROCESS FOR N-OXIDATION OF NITROGEN CONTAINING HETEROARYLS
(71) Janssen Pharmaceutica NV, Turnhoutseweg 30, 2340 Beerse, BE
(72) KREUTTER, Kevin, 71 Thoreau Drive, Plainsboro, New Jersey 08536, US;
LU, Tianbao, 42 Livery Drive, Churchville, Pennsylvania 08966, US;
LEE, Yu Kai, 329 Steeplechase Drive, Exton, Pennsylvania 19341, US;
TELEHA, Christopher, 542 Dreshertown Road, Fort Washington, Pennsylvania 19034, US;
PLAYER, Mark, 80 Page Lane, Phoenixville, Pennsylvania 19460, US;
ZHU, Xizhen, 53 Princeton Arms North I, Cranbury, New Jersey 08512, US
(74) Mercer, Christopher Paul, Carpmaels & Ransford, One Southampton Row, London, WC1B 5HA, GB

(51) (8) **EP 1987005** *
C 07D 213/89
C 07D 213/73
C 07D 409/04
C 07D 405/04
A 61K 31/4418
A 61K 31/4436
A 61K 31/443
A 61P 9/10
(23) 01.09.2010.
(30) ES 20.02.2006. 200600396
(86) PCT/EP2007001174 12.02.2007.
(96) EP 07703406.4 12.02.2007. En
(87) WO2007096072 30.08.2007. 200735
(97) EP 1987005 05.11.2008. 200845 En
(41) 13.04.2011. 201115
(54) NEW PYRIDIN-3-AMINE DERIVATIVES
(71) Almirall, S.A., Ronda General Mitre 151, 08022 Barcelona, ES
(72) VIDAL JUAN, Bernat, C/Font 11, E-08396 Sant Cebrià de Vallalta, ES;
CATURLA JAVALOYES, Juan, Francisco, C/Málaga 1,1º 6a, 08191 Rubí, ES;
LUMERAS AMADOR, Wenceslao, C/Ferran Casablancas 14, 1º 3a Esc., 08225 Terrassa, ES;
VIDAL GISPERT, Laura, C/Carreras i Candi 18-20, 3 º 1a, 08028 Barcelona, ES
(74) Srinivasan, Ravi Chandran, et al, J.A. Kemp & Co., 14 South Square, Gray's Inn, London WC1R 5JJ, GB

(51) (7) **EP 1732900** *
C 07D 231/12
C 07D 231/14
A 61K 31/415
C 07D 235/10
C 07D 409/04
A 61P 29/00
(23) 01.10.2010.
(30) US 25.03.2004. 556107 P
(86) PCT/US2005010183 24.03.2005.
(96) EP 05744197.4 24.03.2005. En
(87) WO2005091752 06.10.2005. 200540
(97) EP 1732900 20.12.2006. 200651 En
(41) 20.04.2011. 201116
(54) ACRYLONITRILE DERIVATIVES FOR INFLAMMATION AND IMMUNE-RELATED USES
(71) Synta Pharmaceuticals Corporation, 45 Hartwell Avenue, Lexington, MA 02421, US
(72) CHEN, Shoujun, 19 Dunster Road, Bedford, MA 01730, US;
YING, Weiwen, 55 Littleton Road, Unit 29B, Ayer, MA 01432, US;
JIANG, Jun, 117 Central Street, A-3, Acton, MA 01720, US;
ONO, Mitsunori, 197 Wood Street, Lexington, MA 02421, US;
SUN, Lijun, 148 Depot Road, Harvard, MA 01451, US
(74) Reitstötter - Kinzebach, Patentanwälte, Sternwartstrasse 4, 81679 München, DE

(51) (8) **EP 1884513**
C 07D 231/40
A 61K 31/41
A 61K 31/415
A 61K 31/4155
A 61K 31/4184
A 61K 31/4192
A 61K 31/4196
A 61K 31/422
A 61K 31/4245
A 61K 31/427
A 61K 31/428
A 61P 3/06
(23) 29.06.2010.
(30) JP 23.05.2005. 2005148847
US 26.05.2005. 685037 P
JP 20.12.2005. 2005367286
US 03.01.2006. 755820 P
(86) PCT/JP2006310603 22.05.2006.
(96) EP 06756652.1 22.05.2006. Ja
(87) WO2006126695 30.11.2006. 200648
(97) EP 1884513 06.02.2008. 200806 En
(41) 23.03.2011. 201112

(54) PYRAZOLE COMPOUND AND THERAPEUTIC AGENT FOR DIABETES COMPRISING THE SAME
(71) Japan Tobacco, Inc., 2-1, Toranomon 2-chome, Minato-ku, Tokyo 105-8422, JP
(72) TAKAGI, Masaki, c/o Central Pharmaceutical Research, Institute of Japan Tobacco Inc., 1-1, Murasaki-cho, Takatsuki-shi, Osaka 5691125, JP;
NAKAMURA, T., c/o Central Pharmaceutical Research, Institute of Japan Tobacco Inc., 1-1, Murasaki-cho, Takatsuki-shi, Osaka 5691125, JP;
MATSUDA, I., c/o Central Pharmaceutical Research, Institute of Japan Tobacco Inc., 1-1, Murasaki-cho, Takatsuki-shi, Osaka 5691125, JP;
FUKUDA, K., c/o Central Pharmaceutical Research, Institute of Japan Tobacco Inc., 1-1, Murasaki-cho, Takatsuki-shi, Osaka 5691125, JP;
OZAWA, Koichi, 4-4-5 Hibarigaoka, Nishitokyo-shi, 202-0001, Tokyo, JP;
UEDA, Nobuhisa, c/o Central Pharmaceutical Research, Institute of Japan Tobacco Inc., 1-1, Murasaki-cho, Takatsuki-shi, Osaka 5691125, JP;
SAKATA, Kaoru, c/o Central Pharmaceutical Research, Institute of Japan Tobacco Inc., 1-1, Murasaki-cho, Takatsuki-shi, Osaka 5691125, JP;
NOMURA, Y., c/o Central Pharmaceutical Research, Institute of Japan Tobacco Inc., 1-1, Murasaki-cho, Takatsuki-shi, Osaka 5691125, JP
(74) Vossius & Partner, Siebertstrasse 4, 81675 München, DE

(51) (8) **EP 1904454 ***
C 07D 235/08
C 07F 7/08
C 07D 401/06
C 07D 409/06
C 07D 491/04
A 61K 31/4188
A 61P 1/00
(23) 22.11.2010.
(30) EP 22.06.2005. 05105566
EP 15.02.2006. 06101699
(86) PCT/EP2006063350 20.06.2006.
(96) EP 06763796.7 20.06.2006. En
(87) WO2006136552 28.12.2006. 200652
(97) EP 1904454 02.04.2008. 200814 En
(41) 18.05.2011. 201120
(54) PROCESS FOR THE PRODUCTION OF INTERMADIATES FOR THE PREPARATION OF TRICYCLIC BENZIMIDAZOLES
(71) Nycomed GmbH, Byk-Gulden-Strasse 2, 78467 Konstanz, DE
(72) CHIESA, Maria Vittoria, Alpenstr. 5, 78464 Konstanz, DE;
PALMER, Andreas, Mägdebergstr. 2, 78224 Singen, DE;
BUHR, Wilm, Zum Kirchenwald 20, 78465 Konstanz, DE;
ZIMMERMANN, Peter Jan, Wilhelmstr. 5, 71139 Ehningen, DE;
BREHM, Christof, Pettenkoferstrasse 36, 84489 Burghausen, DE;
SIMON, Wolfgang-Alexander, Schubertstrasse 17, 78464 Konstanz, DE;
POSTIUS, Stefan, Austrasse 4b, 78467 Konstanz, DE;
KROMER, Wolfgang, Hinterhauserstr. 5, 78464 Konstanz, DE;
ZANOTTI-GEROSA, Antonio, 44 York Street, Cambridge CB1 2PY, GB
(74) Wild, Robert, et al, Nycomed GmbH, Postfach 10 03 10, 78406 Konstanz, DE

(51) (8) **EP 2061770 ***
C 07D 239/22
C 07D 239/49
C 07D 239/54
C 07D 239/58
C 07D 239/70
C 07D 401/06
C 07D 401/10
C 07D 403/04
C 07D 403/10
C 07D 405/04
C 07D 413/10
C 07D 417/10
C 07D 471/14
C 07D 487/04
C 07D 491/10
(23) 10.11.2010.
(30) EP 22.06.2007. 07110913
(86) PCT/EP2008057830 20.06.2008.
(96) EP 08774158.3 20.06.2008. De
(87) WO2009000757 31.12.2008. 200901
(97) EP 2061770 27.05.2009. 200922 De
(41) 04.05.2011. 201118
(54) PIPERAZINE COMPOUNDS WITH HERBICIDAL ACTION
(71) BASF SE, 67056 Ludwigshafen, DE
(72) HUPE, Eike, M 7,2, 68161 Mannheim, DE;
SEITZ, Thomas, Emil-Nolde-Str. 10, 68519 Viernheim, DE;
WITSCHEL, Matthias, Höhenweg 12b, 67098 Bad Dürkheim, DE;
SONG, Dschun, Eichendorffstr. 15a, 68167 Mannheim, DE;
MOBERG, William Karl, Meckenheimer Strasse 34, 67454 Hassloch, DE;
PARRA RAPADO, Liliana, Walther-Blumenstock-Str. 22, 77654 Offenburg, DE;
STELZER, Frank, Ida-Dehmel-Ring 40, 68309 Mannheim, DE;
VESCOVI, Andrea, Carrer Ali Bei 5, 3r, 2a, 08010 Barcelona, ES;
NEWTON, Trevor William, Neubergstr. 30, 67435 Neustadt, DE;
REINHARD, Robert, Berwartsteinstr. 6, 67117 Limburgerhof, DE;
GROSSMANN, Klaus, Mainstr. 1, 67141 Neuhofen, DE;
EHRHARDT, Thomas, Maulbronner Hof 49, 67346 Speyer, DE;
RACK, Michael, Hildastr. 11/1, 69214 Eppelheim, DE;
KIBLER, Elmar, Im Wachtelschlag 13, 67454 Hassloch, DE;
SIEVERNICH, Bernd, Bertolt-Brecht-Str. 18a, 67454 Hassloch, DE

(51) (8) **EP 1924568 ***
C 07D 239/94
C 07D 401/04
C 07D 403/04
C 07D 401/12
C 07D 403/12
C 07D 405/12
C 07D 409/12
C 07D 413/12
C 07D 417/12
A 61K 31/495
(23) 21.09.2010.
(30) US 15.07.2005. 700058 P
(86) PCT/US2006027114 13.07.2006.
(96) EP 06787068.3 13.07.2006. En
(87) WO2007011623 25.01.2007. 200704
(97) EP 1924568 28.05.2008. 200822 En
(41) 13.04.2011. 201115
(54) QUINAZOLINE DERIVATIVES USEFUL IN CANCER TREATMENT
(71) Schering Corporation, 2000 Galloping Hill Road, Kenilworth, NJ 07033-0530, US
(72) MALLAMS, Alan K., 147 Kings Highway, RR3, Hackettstown, NJ 07840, US;
DASMAHAPATRA, Bimalendu, 322 Grant Avenue, Nutley, NJ 07110, US;
NEUSTADT, Bernard, R., 24 Brook Place, West Orange, NJ 07052, US;
DEMMA, Mark, 17 Melbloum Lane, Edison, NJ 08837, US;
VACCARO, Henry, A., 123 Somerset Avenue, South Plainfield, NJ 07080, US
(74) Hussain, Deeba, Merck Sharp & Dohme Limited, Hertford Road, Hoddesdon, Hertfordshire EN11 9BU, GB

(51) (8) **EP 2001476 ***
C 07D 241/00
C 07D 241/02
A 61K 31/497
(23) 01.10.2010.
(30) US 20.03.2006. 784037 P
(86) PCT/US2007007286 20.03.2007.
(96) EP 07753877.5 20.03.2007. En
(87) WO2007109362 27.09.2007. 200739
(97) EP 2001476 17.12.2008. 200851 En
(41) 18.05.2011. 201120
(54) BENZOIMIDAZOLYL-PARAZINE COMPOUNDS FOR INFLAMMATION AND IMMUNE-RELATED USES
(71) Synta Pharmaceuticals Corporation, 45 Hartwell Avenue, Lexington, MA 02421, US
(72) CHEN, Shoujun, 19 Dunster Road, Bedford, MA 01730, US;
JIANG, Jun, 211 Central St. A202, Norwood, MA 02062, US;
ZHANG, Junyi, 130 Bowden St. 304, Lowell, MA 01852, US;
XIE, Yu, 28 Algonquian Drive, Natick, MA 01760, US
(74) Savic, Bojan, et al, Savic Patentanwälte, Bayerstrasse 83, 80335 München, DE

(51) (8) **EP 1817294 ***
C 07D 241/08
C 07D 405/12
C 07D 405/14
C 07D 403/12
C 07D 401/12
C 07D 409/12
C 07D 243/08
A 61K 31/496
A 61P 29/00
(23) 19.11.2010.
(30) US 15.07.2004. 588904 P
(86) PCT/US2005025090 15.07.2005.
(96) EP 05771399.2 15.07.2005. En
(87) WO2006019975 23.02.2006. 200608
(97) EP 1817294 15.08.2007. 200733 En
(41) 11.05.2011. 201119
(54) 1,2,3,4-TETRAHYDROPYRAZIN-2-YL ACETAMIDES AND THEIR USE AS BRADYKININ ANTAGONISTS FOR THE TREATMENT OF INFLAMMATION RELATED DISORDERS
(71) Amgen Inc., One Amgen Center Drive M/S 28-2-C, Thousand Oaks CA 91320-1799, US
(72) ASKEW, JR., Benny C., 266 Arrowhead Road, Marshfield, MA 02050, US;
AYA, Toshihiro, 899 St. Charles Drive Apt. 1, Thousand Oaks, California 91360, US;
BISWAS, Kaustav, 26003 Alizia Canyon Drive, Unit B, Calabasas, California 91302, US;
CAI, Guolin, 2382 Whitechapel Place, Thousand Oaks, California 91362, US;
CHEN, Jian Jeffrey, 677 Via Carro, Newbury Park, California 91320, US;
HAN, Nianhe, 4522 Via Laguna, Thousand Oaks, California 91320, US;
LIU, Qingyian, 4631 Paseo Girasol, Camarillo, California 93012, US;
NGUYEN, Thomas, 468 Calle Veracruz, Thousand Oaks, California 91320, US;
NISHIMURA, Nobuko, 24050 Arminta Street, West Hills, California 91304, US;
NOMAK, Rana, Bogazi University, Ugaksavar LOJ. B. BLok D:20, 34342 Istanbul, TR;
PETERKIN, Tanya, 5440 Quakertown Avenue 309, Woodland Hills, California 91364, US;
QIAN, Wenyuan, 2548 Villamonte Court, Carmarillo, California 93010, US;
YANG, Kevin, 8871 Camino Real Avenue, San Gabriel, California 91775, US;
YUAN, Chester Chenguang, 1416 Geyser Court, Newbury Park, California 91320, US;
ZHU, Jiawang, 5000 Via Mesita, Thousand Oaks, California 91320, US;
D'AMICO, Derin C., 4571 Calle Norte, Newbury Park, California 91320, US;
HUMAN, Jason Brooks, 2021 Brownstone Court, Gastonia, North Carolina 28054, US;
HUANG, QI, 12308 Willow Forest Drive, Moorpark, California 93021, US
(74) Grünecker, Kinkeldey, Stockmair & Schwanhäusser, Anwaltssozietät, Leopoldstrasse 4, 80802 München, DE

(51) (8) **EP 1831185** *
C 07D 249/12
A 61K 31/4196
A 61P 25/00
C 07D 257/04
A 61K 31/41
C 07D 233/70
A 61K 31/4166
C 07D 403/10
C 07D 401/04
C 07D 401/06
C 07D 401/10
C 07D 405/14
C 07D 401/14
(23) 22.09.2010.
(30) EP 21.12.2004. 04106817
EP 03.06.2005. 05104873
(86) PCT/EP2005056951 20.12.2005.
(96) EP 05823472.5 20.12.2005. En
(87) WO2006067139 29.06.2006. 200626
(97) EP 1831185 12.09.2007. 200737 En
(41) 16.03.2011. 201111
(54) TRIAZOLONE, TETRAZOLONE AND IMIDAZOLONE DERIVATIVES FOR USE AS ALPHA-2C ADRENORECEPTOR ANTAGONISTS
(71) Janssen Pharmaceutica NV, Turnhoutseweg 30, 2340 Beerse, BE
(72) ANDRES-GIL, José, Ignacio, Johnson & Johnson, Calle Jarama 75 (Div.of Janssen-Cilag S.A.), 45007 Toledo(Poligono Induatrial), ES;
ALCÁZAR-VACA, Manuel, Jesús, Johnson & Johnson, Calle Jarama 75 (Div. of Janssen-Cilag S.A.), 45007 Toledo (Polígono Industrial), ES;
PASTOR-FERNÁNDEZ, Joaquin, Johnson & Johnson, Calle Jarama 75 (Div.Janssen-CilagS.A.), 45007 Toledo (Polígono Industrial), ES;
DRINKENBURG, W.H.I.M., Jansen Pharmaceutica N.V., Turnhoutseweg 30, B-2340 Beerse, BE;
LANGLOIS, Xavier J.M., Janssen Pharmaceutica N.V., Turnhoutseweg 30, B-2340 Beerse, BE;
OYARZABAL-SANTAMARINA, Julen, Calle Góngora 12, 45280 Olias del Rey (Toledo), ES;
VEGA-RAMIRO, Juan, Antonio, Johnson & Johnson, Calle Jarama 75 (Div.Janssen-Cilag S.A.), 45007 Toledo (Polígono Industrial), ES
(74) Daelemans, Frank F.R., et al, Janssen Pharmaceutica N.V., J&J Patent Law Department, Turnhoutseweg 30, 2340 Beerse, BE

(51) (8) **EP 1966170** *
C 07D 261/08
C 07D 413/08
C 07D 413/12
C 07D 417/08
C 07D 413/14
(23) 02.07.2010.
(30) US 22.12.2005. 752780 P
US 20.06.2006. 805233 P
(86) PCT/IB2006003671 11.12.2006.
(96) EP 06842247.6 11.12.2006. En
(87) WO2007072164 28.06.2007. 200726
(97) EP 1966170 10.09.2008. 200837 En
(41) 27.04.2011. 201117
(54) ESTROGEN MODULATORS
(71) Pfizer Products Inc., Eastern Point Road, Groton, CT 06340, US
(72) BAILEY, Simon, Agouron Pharmaceuticals, 10555 Science Center Drive, San Diego, CA 92121, US;
BARRETT, Stephen, Douglas, Pfizer Global Research and Development, Ann Arbor Laboratories, 2800 Plymouth Road, Ann Arbor, MI 48105, US;
BRATTON, Larry, Don, Pfizer Global Research and Development, Ann Arbor Laboratories, 2800 Plymouth Road, Ann Arbor, MI 48105, US;
FAKHOURY, Stephen, Alan, Pfizer Global Research and Development, Ann Arbor Laboratories, 2800 Plymouth Road, Ann Arbor, MI 48105, US;
JENNINGS, Sandra, Marie, Pfizer Global Research and Development, Ann Arbor Laboratories, 2800 Plymouth Road, Ann Arbor, MI 48105, US;
MITCHELL, Lorna, Helen, Pfizer Global Research and Development, Ann Arbor Laboratories, 2800 Plymouth Road, Ann Arbor, MI 48105, US;
RAHEJA, Raj, Kumar, Pfizer Global Research and Development, Ann Arbor Laboratories, 2800 Plymouth Road, Ann Arbor, MI 48105, US;
SHANMUGASUNDARAM, Veerabahu, Pfizer Global Research and Development, Ann Arbor Laboratories, 2800 Plymouth Road, Ann Arbor, MI 48105, US
(74) Pringot, Thomas, et al, Pfizer Limited, European Patent Department, Ramsgate Road, Sandwich, Kent CT13 9NJ, GB

(51) (8) **EP 1838686** *
C 07D 275/03
A 61K 31/425
A 61K 31/427
A 61K 31/4427
A 61K 31/4725
A 61K 31/5377
A 61P 25/28
A 61P 3/06
A 61P 3/10
A 61P 9/00
A 61P 9/10
C 07D 417/12
(23) 23.09.2010.
(30) SE 10.01.2005. 0500053
SE 08.07.2005. 0501628
(86) PCT/SE2006000026 09.01.2006.
(96) EP 06700350.9 09.01.2006. En
(87) WO2006073363 13.07.2006. 200628
(97) EP 1838686 03.10.2007. 200740 En
(41) 23.03.2011. 201112
(54) DERIVATIVES OF ISOTHIAZOL-3(2H)-ONE 1,1-DIOXIDES AS LIVER X RECEPTOR MODULATORS
(71) AstraZeneca AB, 151 85 Södertälje, SE
(72) BOSTRÖM, Jonas, AstraZeneca R & D Mölndal, S-431 83 Mölndal, SE;
BRICKMANN, Kay, AstraZeneca R & D Mölndal, S-431 83 Mölndal, SE;
BROO, Anders, AstraZeneca R & D Mölndal, S-431 83 Mölndal, SE;
HOLM, Patrik, Skärgårdsvägen 984, FIN-21600 Pargas, FI;
JUDKINS, Robert, AstraZeneca R & D Mölndal, S-431 83 Mölndal, SE;

LI, Lanna, AstraZeneca R & D Mölndal, S-431 83 Mölndal, SE;
SANDBERG, Pernilla, AstraZeneca R & D Mölndal, S-431 83 Mölndal, SE;
SWANSON, Marianne, AstraZeneca R & D Mölndal, S-431 83 Mölndal, SE;
WESTERLUND, Christer, AstraZeneca R & D Mölndal, S-431 83 Mölndal, SE
(74) Wahlström, Stig Christer Gunnar, AstraZeneca, Global Intellectual Property, 151 85 Södertälje, SE

(51) (8) **EP 2048137**
C 07D 277/46
C 07D 417/12
C 07D 231/40
C 07D 403/12
C 07D 487/08
A 61K 31/415
A 61K 31/426
A 61K 31/427
A 61P 3/10
C 07C 69/92
(23) 06.11.2010.
(30) GB 18.02.2004. 0403593
GB 16.06.2004. 0413386
GB 16.10.2004. 0423039
(96) EP 08158356.9 15.02.2005. En
(97) EP 2048137 15.04.2009. 200916 En
(41) 04.05.2011. 201118
(54) Benzamide derivatives and their use as glucokinase activating agents.
(71) AstraZeneca AB, 151 85 Södertälje, SE
(72) Caulkett, Peter, William, Rodney, AstraZeneca R&D Alderley Alderley Park, Macclesfield, Cheshire SK10 4TG, GB;
Johnston, Craig, AstraZeneca R&D Alderley Alderley Park, Macclesfield, Cheshire SK10 4TG, GB;
Mckerrecher, Darren, AstraZeneca R&D Alderley Alderley Park, Macclesfield, Cheshire SK10 4TG, GB;
Pike, Kurt, Gordon, AstraZeneca R&D Alderley Alderley Park, Macclesfield, Cheshire SK10 4TG, GB

(51) (8) **EP 1867642**
C 07D 307/77
A 61K 31/343
A 61K 31/13
A 61K 31/165
A 61K 31/445
A 61K 31/473
A 61K 31/55
A 61K 45/00
A 61P 25/20
A 61P 25/28
A 61P 43/00
(23) 31.03.2011.
(30) JP 04.04.2005. 2005107673
(86) PCT/JP2006307055 03.04.2006.
(96) EP 06731003.7 03.04.2006. Ja
(87) WO2006107027 12.10.2006. 200641
(97) EP 1867642 19.12.2007. 200751 En
(41) 11.05.2011. 201119
(54) AGENT FOR PREVENTION OR TREATMENT OF NOCTURNAL BEHAVIORAL DISORDER ASSOCIATED WITH DEMENTIA
(71) Takeda Pharmaceutical Company Limited, 1-1, Doshomachi 4-chome, Chuo-ku, Osaka-shi, Osaka 541-0045, JP
(72) HIRAI, Keisuke, TAKEDA PHARMACEUTICAL COMPANY LTD., 17-85, Jusohonmachi 2-chome, Yodogawa-ku, Osaka-shi, Osaka 5328686, JP;
MIYAMOTO, Masaomi, TAKEDA PHARMACEUTICAL COMP. LTD, 1-1, Doshomachi 4-chome, Chuo-ku, Osaka-shi, Osaka, JP
(74) Dossmann, Gérard, et al, Casalonga & Partners, Bayerstrasse 71-73, 80335 München, DE

(51) (8) **EP 2185533 ***
C 07D 311/30
(23) 09.02.2011.
(30) IN 09.08.2007. DE16932007
(86) PCT/IN2008000496 08.08.2008.
(96) EP 08789926.6 08.08.2008. En
(87) WO2009019721 12.02.2009. 200907
(97) EP 2185533 19.05.2010. 201020 En
(41) 23.03.2011. 201112
(54) QUERCETIN DERIVATIVES AS ANTI-CANCER AGENTS
(71) Dabur Pharma Limited, 3 Factory Road, Adjacent to Safdarjung Hospital, New Delhi 110 029, IN
(72) JOSHI, Narendra Shriram, Dabur Pharma Limited, 22, Site IV, Sahibabad, Ghaziabad 201 010, Uttar Pradesh, IN;
AGGARWAL, Pawan, Dabur Pharma Limited, 22, Site IV, Sahibabad, Ghaziabad 201 010, Uttar Pradesh, IN;
HIRPARA, Vitthalbhai Ketan, Dabur Pharma Limited, 22, Site IV, Sahibabad, Ghaziabad 201 010, Uttar Pradesh, IN;
JAGGI, Manu, Dabur Research Foundation, 22, Site IV, Sahibabad, Ghaziabad 201 010, Uttar Pradesh, IN;
SINGH, Anu T., Dabur Research Foundation, 22, Site IV, Sahibabad, Ghaziabad 201 010, Uttar Pradesh, IN;
AWASTHI, Anshumali, Dabur Research Foundation, 22, Site IV, Sahibabad, Ghaziabad 201 010, Uttar Pradesh, IN;
VERMA, Ritu, Dabur Research Foundation, 22, Site IV, Sahibabad, Ghaziabad 201 010, Uttar Pradesh, IN
(74) Jennings, Nigel Robin, et al, Kilburn & Strode LLP, 20 Red Lion Street, London WC1R 4PJ, GB

(51) (8) **EP 2004621 ***
C 07D 313/12
C 07F 9/54
A 61K 31/335
A 61P 37/00
(23) 01.10.2010.
(30) US 28.03.2006. 392098
(86) PCT/IB2007000793 23.03.2007.
(96) EP 07734118.8 23.03.2007. En
(87) WO2007110761 04.10.2007. 200740
(97) EP 2004621 24.12.2008. 200852 En
(41) 30.03.2011. 201113
(54) POLYMORPHIC FORMS OF OLOPATADINE HYDROCHLORIDE AND METHODS FOR PRODUCING OLOPATADINE AND SALTS THEREOF
(71) Universität Zürich, Prorektorat MNW, Rämistrasse 71, 8006 Zürich, CH;

Azad Pharmaceutical Ingredients AG, Friedbergstrasse 68, 8200 Schaffhausen, CH
(72) BADER, Thomas, Buchzelgstrasse 78, CH-8053 Zurich, CH;
BICHSEL, Hans-Ulrich, Salen-Reutenen, Escherhauweg 2, CH-8507 Hörhausen, CH;
GILOMEN, Bruno, Dorflistrasse 67, CH-8050 Zurich, CH;
MEYER-WILMES, Imelda, Austrasse 3, CH-9469 Haag, CH;
SUNDERMEIER, Mark, Jahnstrasse 75, 40215 Dusseldorf, DE
(74) Benech, Frédéric, Cabinet Frederic Benech, 146-150, avenue des Champs-Elysées, 75008 Paris, FR

(51) (8) **EP 2004626 ***
C 07D 401/04
A 61K 31/4439
A 61P 37/00
(23) 01.10.2010.
(30) US 23.03.2006. 785402 P
(86) PCT/US2007007439 23.03.2007.
(96) EP 07754016.9 23.03.2007. En
(87) WO2007112093 04.10.2007. 200740
(97) EP 2004626 24.12.2008. 200852 En
(41) 18.05.2011. 201120
(54) BENZIMIDAZOLYL-PYRIDINE COMPOUNDS FOR INFLAMMATION AND IMMUNE-RELATED USES
(71) Synta Pharmaceuticals Corporation, 45 Hartwell Avenue, Lexington, MA 02421, US
(72) CHEN, Shoujun, 19 Dunster Road, Bedford, MA 01730, US;
SUN, Lijun, 148 Depot Road, Harvard, MA 01451, US;
XIE, Yu, 28 Algonquian Drive, Natick, MA 01760, US
(74) Savic, Bojan, et al, Savic Patentanwälte, Bayerstrasse 83, 80335 München, DE

(51) (8) **EP 1963306 ***
C 07D 401/12
A 61K 31/4439
A 61P 1/04
(23) 26.10.2010.
(30) EP 22.12.2005. 05028252
(86) PCT/EP2006012477 22.12.2006.
(96) EP 06841138.8 22.12.2006. En
(87) WO2007071444 28.06.2007. 200726
(97) EP 1963306 03.09.2008. 200836 En
(41) 13.04.2011. 201115
(54) ESOMEPRAZOLE ARGININE
(71) KRKA, tovarna zdravil, d.d., Novo mesto, Smarjeska cesta 6, 8501 Novo mesto, SI
(72) KOTAR-JORDAN, Berta, Vodeniska 19, 8311 Kostanjevica na Krki, SI;
PISEK, Robert, Trzaska cesta 47, 1000 Ljubljana, SI;
ZAJC, Natalija, Svibnik 23, 8340-Crnomelj, SI;
VAJS, Anamarija, Segova ulica 3, 8000 Novo mesto, SI
(74) UEXKÜLL & STOLBERG, Patentanwälte, Beselerstrasse 4, 22607 Hamburg, DE

(51) (8) **EP 2024359 ***
C 07D 401/14
A 61K 31/166
A 61K 31/4439
A 61K 31/4453
A 61K 31/4545
A 61P 25/18
A 61P 25/24
A 61P 25/28
C 07C 233/79
C 07D 211/06
C 07D 295/04
C 07D 401/12
(23) 03.11.2010.
(30) US 02.05.2006. 746187 P
(86) PCT/SE2007000409 27.04.2007.
(96) EP 07748074.7 27.04.2007. En
(87) WO2007126362 08.11.2007. 200745
(97) EP 2024359 18.02.2009. 200908 En
(41) 30.03.2011. 201113
(54) COMPOUNDS THAT ARE AGONISTS OF MUSCARINIC RECEPTORS AND THAT MAY BE EFFECTIVE IN TREATING PAIN, ALZHEIMER'S DECEASE AND/OR SCHIZOPHRENIA
(71) AstraZeneca AB, 151 85 Södertälje, SE
(72) CHENG, Yun-Xing, AstraZeneca R & D Montreal, 7171 Frederick-Banting, St. Laurent, Montreal, Québec H4S 1Z9, CA;
LUO, Xuehong, AstraZeneca R & D Montreal, 7171 Frederick-Banting, St. Laurent, Montreal, Québec H4S 1Z9, CA;
TOMASZEWSKI, Miroslaw, AstraZeneca R & D Montreal, 7171 Frederick-Banting, St. Laurent, Montreal, Québec H4S 1Z9, CA

(51) (8) **EP 2029581 ***
C 07D 403/12
C 07D 401/12
A 61K 31/416
A 61P 29/00
(23) 22.09.2010.
(30) US 29.03.2006. 786962 P
(86) PCT/US2007007658 27.03.2007.
(96) EP 07754211.6 27.03.2007. En
(87) WO2007126871 08.11.2007. 200745
(97) EP 2029581 04.03.2009. 200910 En
(41) 16.03.2011. 201111
(54) P38 INHIBITORS AND METHODS OF USE THEREOF
(71) Array Biopharma, Inc., 3200 Walnut Street, Boulder, CO 80301, US
(72) MUNSON, Mark, 3200 Walnut Street, Boulder, Colorado 80301, US;
HUNT, Kevin, W., 1614 Bluefield Avenue, Longmont, Colorado 80501, US;
CLARK, Christopher, T., 11874 Perry Street, Westminster, CO 80031, US;
KIM, Ganghyeok, 2217 Holyoke Drive, Superior, Colorado 80027, US;
BURGESS, Laurence, E., 405 Oakwood Place, Boulder, Colorado 80304, US;
RIZZI, James, 7180 Longview Drive, Longmont, Colorado 80503, US

(74) Office Freylinger, P.O. Box 48, 8001 Strassen, LU

(51) (8) **EP 1888570 ***
C 07D 413/00
C 07D 317/00
C 07D 241/00
C 07D 333/02
(23) 15.07.2010.
(30) US 21.04.2005. 673361 P
(86) PCT/US2006014965 20.04.2006.
(96) EP 06750880.4 20.04.2006. En
(87) WO2006116007 02.11.2006. 200644
(97) EP 1888570 20.02.2008. 200808 En
(41) 23.03.2011. 201112
(54) METHODS FOR SYNTHESIS OF DICARBAMATE COMPOUNDS AND INTERMEDIATES IN THE FORMATION THEREOF
(71) MedPointe Healthcare Inc., 265 Davidson Avenue, Suite 300, Somerset, New Jersey 08873-4120, US
(72) MORTKO, Henry, 1191 Evergreen Drive, Bridgewater, NJ 08870, US;
HE, Weixuan, 962 Ridge Road, Monmouth Junction, NJ 08852, US;
ANDERSEN, Marc, W., 4500 Touchstone Forest Road, Raleigh, NC 27612, US;
DOTSE, Anthony, K., 506 Sherwood Forest Place, Cary, NC 27519-6353, US;
LI, Jie, 312 Council Gap Court, Cary, NC 27513, US
(74) McCall, John Douglas, W.P. Thompson & Co., Coopers Building, Church Street, Liverpool L1 3AB, GB

(51) (8) **EP 1902049 ***
C 07D 413/12
C 07D 265/02
A 61K 31/536
A 61P 5/34
(23) 30.11.2010.
(30) DE 24.06.2005. 102005030292
(86) PCT/EP2006006531 22.06.2006.
(96) EP 06762404.9 22.06.2006. En
(87) WO2006136461 28.12.2006. 200652
(97) EP 1902049 26.03.2008. 200813 En
(41) 18.05.2011. 201120
(54) NON-STEROIDAL PROGESTERONE RECEPTOR MODULATORS
(71) Bayer Schering Pharma Aktiengesellschaft, Müllerstrasse 178, 13353 Berlin, DE
(72) HILLISCH, Alexander, Stöckerberg 3-5, 42651 Solingen, DE;
BOTHE, Ulrich, Bredowstrasse 24, 10551 Berlin, DE;
KAUFMANN, Guenter, Schillbachstrasse 41, 07743 Jena, DE;
SOBEK, Lothar, Am Tege ler Hafen 38, 13507 Berlin, DE;
FUHRMANN, Ulrike, Charlottenburger Ufer 4, 10587 Berlin, DE;
DROESCHER, Peter, Lessingstrasse 7, 99425 Weimar, DE;
SCHMEES, Norbert, Bondickstrasse 61, 13469 Berlin, DE;
SCHWEDE, Wolfgang, Magdeburger Strasse 41a, 16548 Glienicke, DE;
MOELLER, Carsten, Windscheidstrasse 22, 10627 Berlin, DE;
SCHMIDT, Anja, Wielandstrasse 11, 10529 Berlin, DE

(51) (8) **EP 1797083 ***
C 07D 417/12
C 07D 419/12
C 07C 311/21
A 61K 31/18
A 61K 31/445
A 61P 1/00
(23) 15.09.2010.
(30) US 24.09.2004. 612720 P
(86) PCT/US2005033692 19.09.2005.
(96) EP 05806708.3 19.09.2005. En
(87) WO2006036670 06.04.2006. 200614
(97) EP 1797083 20.06.2007. 200725 En
(41) 16.03.2011. 201111
(54) SULFONAMIDE COMPOUNDS
(71) Janssen Pharmaceutica N.V., Turnhoutseweg 30, 2340 Beerse, BE
(72) ALLISON, Brett, 2741 Caminito Cedros, Del Mar, California 92014, US;
PHUONG, Victor, K., 10249 Black Mountain Road, No. Q4, San Diego, California 92126, US;
PIPPEL, Marna, C., W., 13106 Caminito Mar Villa, Del Mar, California 92014, US;
RABINOWITZ, Michael, H., 8525 Celtic Court, San Diego, California 92129, US;
VENKATESAN, Hariharan, 17065 Bernardo Oaks Drive, San Diego, California 92128, US
(74) Fisher, Adrian John, et al, Carpmaels & Ransford, One Southampton Row, London, WC1B 5HA, GB

(51) (8) **EP 1879887 ***
C 07D 417/12
C 07D 401/12
C 07D 413/12
C 07D 453/06
C 07D 471/08
C 07D 211/42
C 07D 211/46
A 61K 31/452
A 61P 3/00
(23) 03.11.2010.
(30) FR 15.04.2005. 0503795
(86) PCT/FR2006000829 14.04.2006.
(96) EP 06743700.4 14.04.2006. Fr
(87) WO2006108965 19.10.2006. 200642
(97) EP 1879887 23.01.2008. 200804 Fr
(41) 27.04.2011. 201117
(54) NPY ANTAGONISTS, PREPARATION AND USE
(71) CEREP, 155, Boulevard Haussmann, 75008 Paris, FR
(72) BOTEZ, Iuliana, 53, rue Anatole France, F-78800 Houilles, FR;
DAVID-BASEI, Christelle, Le Clos de la Vieille Fontaine, 17bis rue Gambetta, 92000 Nanterre, FR;
GOURLAOUËN, Nelly, 1114, avenue Roger Salengro, Bat. C, F-92370 Chaville, FR;
NICOLAÏ, Eric, 16, rue Alexis Bouvier, F-92500 Rueil Malmaison, FR;
BALAVOINE, Fabrice, 43, rue des Favorites, F-75015 Paris, FR;
VALETTE, Gérard, 8, rue de Montségur, F-31120 Lacroix-Falgarde, FR;
SERRADEIL-LE GAL, Claudine, 45, avenue des Troubadours, F-31750 Escalquens, FR

(74) Tezier Herman, Béatrice, et al, Cabinet Becker & Associés, 25, rue Louis Le Grand, 75002 Paris, FR

(51) (8) **EP 2013203 ***
C 07D 417/12
(23) 23.09.2010.
(30) HU 02.05.2006. 0600347
(86) PCT/HU2007000038 02.05.2007.
(96) EP 07733855.6 02.05.2007. En
(87) WO2007125374 08.11.2007. 200745
(97) EP 2013203 14.01.2009. 200903 En
(41) 23.03.2011. 201112
(54) Process for the preparation of 5-(2-bromoethyl)-6-chloro-1,3-dihydro-2H-indol-2-one
(71) Richter Gedeon Nyrt., Gyömröi út 19-21, 1103 Budapest, HU
(72) NEU, József, Hegedüs Gyula u. 44/B, H-1133 Budapest, HU;
TÖRLEY, József, Katona József u. 41, H-1137 Budapest, HU;
GARADNAY, Sándor, Bánomi Iakótelep 12, H-2500 Esztergom, HU
(74) HOFFMANN EITLE, Patent- und Rechtsanwälte, Arabellastraße 4, 81925 München, DE

(51) (8) **EP 1858893 ***
C 07D 417/14
C 07D 417/12
A 61K 31/427
(23) 22.03.2011.
(30) US 04.03.2005. 658985 P
(86) PCT/US2006006436 24.02.2006.
(96) EP 06721003.9 24.02.2006. En
(87) WO2006096338 14.09.2006. 200637
(97) EP 1858893 28.11.2007. 200748 En
(41) 27.04.2011. 201117
(54) 1,3-THIAZOLE-5-CARBOXAMIDES USEFUL AS CANCER CHEMOTHERAPEUTIC AGENTS
(71) Bayer HealthCare AG, 51368 Leverkusen, DE
(72) CHUANG, Chih-yuan, 2713 South Norfolk Street Apt. 311, San Mateo, CA 94403, US;
WICKENS, Philip, 9 Michaels Way, Wallingford, CT 06492, US;
HONG, Zhenqiu, 11a Robert Treat Drive, Milford, CT 06460, US;
BRENNAN, Catherine, 2 Thorne Ridge Drive, Durham, NC 27713, US;
DIXON, Julie, A., 40 Ridgewood Road, Bethany, CT 06524, US;
KLUENDER, Harold, C., E., 27 Academy Road, Trumbull, CT 06611, US;
KREIMAN, Charles, 49 Boylston Street, Watertown, MA 02472, US;
KUMARASINGHE, Ellalahewage, 1310 Aspen Glen Drive, Hamden, CT 06518, US
(74) Heiner, Thomas, Bayer Schering Pharma AG, Patents and Licensing, Müllerstrasse 178, 13353 Berlin, DE

(51) (8) **EP 2088149**
C 07D 471/08
A 61K 31/444
A 61P 25/28
(23) 02.03.2011.
(30) RU 01.11.2006. 2006138456
(86) PCT/RU2007000595 29.10.2007.
(96) EP 07861039.1 29.10.2007. Ru
(87) WO2008054252 08.05.2008. 200819
(97) EP 2088149 12.08.2009. 200933 En
(41) 13.04.2011. 201115
(54) PHARMACOLOGICALLY ACTIVE N,N'-SUBSTITUTED 3,7-DIAZABICYCLO [3.3.1]NONANES, PHARMACEUTICAL COMPOSITIONS BASED THEREON AND A METHOD FOR THE USE THEREOF
(71) Institute of Physiologically active compunds of, the Russian Academy of Sciences (IPAC RAN), Severny proezd, 1, Chernogolovka, Noginsky r-n, Moskovskaya obl., 142432, RU
(72) BACHURIN, Sergey Olegovich, ul. Tsentralnaya, 4-V-47, Chernogolovka, Noginsky raion, Moskovskaya obl., 142432, RU;
GRIGOR'EV, Vladimir Viktorovich, Shkolny b-r, 19-94, Chernogolovka, Noginsky raion, Moskovskaya obl., 142432, RU;
ZEFIROV, Nikolay Serafimovich, Leninsky pr-t, 99-553, Moscow, 117421, RU;
LAVROV, Mstislav Igorevich, ul. Suzdalskaya, 34-2-159, Moscow, 111672, RU;
LAPTEVA, Vera Leonidovna, MGU, Leninskie gory, 1/I-63, Moscow, 119234, RU;
PALYULIN, Vladimir Aleksandrovich, pr-t Vernadskogo, 9-17, Moscow, 117311, RU
(74) Vossius & Partner, P.O. Box 86 07 67, 81634 München, DE

(51) (8) **EP 1899338 ***
C 07D 471/10
A 61K 31/438
A 61P 1/04
(23) 25.11.2010.
(30) EP 16.06.2005. 05105330
(86) PCT/EP2006063163 13.06.2006.
(96) EP 06763684.5 13.06.2006. En
(87) WO2006134111 21.12.2006. 200651
(97) EP 1899338 19.03.2008. 200812 En
(41) 18.05.2011. 201120
(54) SPIRO-BENZIMIDAZOLES AS INHIBITORS OF GASTRIC ACID SECRETION
(71) Nycomed GmbH, Byk-Gulden-Strasse 2, 78467 Konstanz, DE
(72) ZIMMERMANN, Peter Jan, Wilhelmstr. 5, 71139 Ehningen, DE;
SENN-BILFINGER, Jörg, Säntisstrasse 7, 78464 Konstanz, DE;
BREHM, Christof, Pettenkoferstrasse 36, 84489 Burghausen, DE;
BUHR, Wilm, Zum Kirchenwald 20, 78465 Konstanz, DE;
CHIESA, Maria Vittoria, Alpenstr. 5, 78464 Konstanz, DE;
PALMER, Andreas, Mägdebergstr. 2, 78224 Singen, DE;
SIMON, Wolfgang-Alexander, Schubertstrasse 17, 78464 Konstanz, DE;
POSTIUS, Stefan, Austrasse 4b, 78467 Konstanz, DE;
KROMER, Wolfgang, Hinterhauserstr. 5, 78464 Konstanz, DE
(74) Wild, Robert, Nycomed GmbH, Postfach 10 03 10, 78406 Konstanz, DE

(51) (8) **EP 1973914 ***
C 07D 471/10
C 07D 487/10
C 07D 519/00
A 61K 31/55
A 61K 31/438
A 61K 31/4188
A 61K 31/437
A 61P 9/00
A 61P 11/00
A 61P 35/00
(23) 12.10.2010.
(30) US 22.12.2005. 752779 P
(86) PCT/US2006049169 22.12.2006.
(96) EP 06848103.5 22.12.2006. En
(87) WO2007076086 05.07.2007. 200727
(97) EP 1973914 01.10.2008. 200840 En
(41) 13.04.2011. 201115
(54) TRANSFORMING GROWTH FACTOR MODULATORS
(71) Biogen Idec MA Inc., 14 Cambridge Center, Cambridge, MA 02142, US
(72) LEE, Wen-cherng, 192 Spring Street, Lexington, MA 02421, US;
CHUAQUI, Claudio, 83, Menotomy Road, Arlington, Massachusetts 02476, US;
SUN, Lihong, 15 Mystic View Terrace, Arlington, MA 02474, US;
HOEMANN, Michael, 41 Lilac Circle, Marlborough, MA 01752, US;
NIU, Deqiang, 30 Grapevine Avenue, Lexington, MA 02421, US;
YAN, Dingxue, 3 Pratt Street, South Grafton, MA, US;
PETTER, Russell, C., 343 Hudson Road, Stow, MA 01775, US;
FENG, Helen (Xiaomei), 42 George Road, Winchester, MA 01890, US
(74) Mathys & Squire LLP, 120 Holborn, London, EC1N 2SQ, GB

(51) (8) **EP 2183251 ***
C 07D 471/16
A 61P 31/00
A 61P 29/00
A 61P 35/00
A 61K 31/4745
(23) 20.11.2010.
(30) US 02.08.2007. 963144 P
(86) PCT/US2008009263 30.07.2008.
(96) EP 08794930.1 30.07.2008. En
(87) WO2009017795 05.02.2009. 200906
(97) EP 2183251 12.05.2010. 201019 En
(41) 11.05.2011. 201119
(54) INDAZOLE COMPOUNDS FOR TREATING INFLAMMATORY DISORDERS, DEMYELINATING DISORDERS AND CANCERS
(71) Antisoma Ventures Limited, Chiswick Park Building 5, 566 Chiswick High Road, London W4 5YF, GB
(72) AJAMI, Alfred, M., 89 Glen Road, 8, Brookline, MA 02445, US;
DUNCAN, Kenneth, 6207 Stearns Hill Road, Waltham, MA 02451, US
(74) Snodin, Michael D., Potter Clarkson LLP, Park View House, 58 The Ropewalk, Nottingham, NG1 5DD, GB

(51) (8) **EP 2102209 ***
C 07D 471/22
A 61K 31/551
A 61P 25/00
(23) 18.11.2010.
(30) FR 05.01.2007. 0700046
(86) PCT/FR2008000012 04.01.2008.
(96) EP 08761736.1 04.01.2008. Fr
(87) WO2008099081 21.08.2008. 200834
(97) EP 2102209 23.09.2009. 200939 Fr
(41) 11.05.2011. 201119
(54) NOVEL TRIAZABENZO[A]NAPHTHO[2,1,8-cde]AZULENE DERIVATIVES, METHOD FOR PREPARING THE SAME AND PHARMACEUTICAL COMPOSITIONS CONTAINING THE SAME
(71) Les Laboratoires Servier, 35, rue de Verdun, 92284 Suresnes Cedex, FR;
Centre National de la Recherche Scientifique, 3, rue Michel-Ange, 75794 Paris Cedex 16, FR;
Université de Paris-Sud, 15, rue Georges Clémenceau, 91405 Orsay Cedex, FR
(72) BRION, Jean-Daniel, 76, rue du Ch?teau, F-95320 Saint Leu La Fôret, FR;
HERVE, Maud, 4, sentier de Fontenay, Appartement 241, F-92330 Sceaux, FR;
MOREAU, Anne, 8 route de Trébeurden, 22300 Lannion, FR;
RENKO, Zafiarisoa, Dolor, 9, Résidence Chanteraine, F-91940 Les Ulis, FR;
LE RIDANT, Alain, 47-47 bis boulevard du Commandant Charcot, F-92200 Neuilly Sur Seine, FR;
HARPEY, Catherine, 135, rue du Ranelagh, FR-75016 Paris, FR

(51) (8) **EP 1891073 ***
C 07D 487/04
C 07D 209/94
C 07D 491/04
C 07D 333/80
C 07D 311/94
C 07D 221/18
C 07D 307/93
A 61K 31/403
A 61K 31/407
A 61P 25/00
(23) 24.11.2010.
(30) EP 26.05.2005. 05104511
(86) PCT/EP2006062612 24.05.2006.
(96) EP 06763283.6 24.05.2006. En
(87) WO2006125812 30.11.2006. 200648
(97) EP 1891073 27.02.2008. 200809 En
(41) 18.05.2011. 201120
(54) NOVEL SUBSTITUTED TETRACYCLIC TETRAHYDROFURAN, PYRROLIDINE AND TETRAHYDROTHIOPHENE DERIVATIVES AND THEIR USE AS A MEDICAMENT
(71) Janssen Pharmaceutica NV, Turnhoutseweg 30, 2340 Beerse, BE
(72) MEGENS, A.A.H.P., Janssen Pharmaceutica N.V., Turnhoutseweg 30, B-2340 Beerse, BE;

TRABANCO-SUÁREZ, A.A., Johnson & Johnson R&D, Division of Janssen-Cilag S.A., Calle Jarama 75, Poligono Industrial, 45007 Toledo, ES;
KOUKNI, M., KULeuven Research&Development, Rue de Scherdemael 58, 1070 Brussel, BE;
HOORNAERT, G.J.C., KU Leuven Research&Development, Minderbroedersstraat 8a, B-3000 Leuven, BE;
COMPERNOLLE, F.J.C, KU Leuven Resarch&Developement, Minderbroedersstraat 8a, B-3000 Leuven, BE;
KOZLECKI, Tomasz, Gornickiego 33/3, PL-WROCLAW 50-337, PL;
CID-NUAEZ, J.M., Johnson & Johnson Pharm. R&D, Division of Janssen-Cilag S.A., Calle Jarama, 75, Poligono Industrial, 45007 Toledo, ES;
MAO, Hua, 900n Leverett Avenue, Apt. 362, Fayetteville, Arkansas AR72701, US;
JHA, Sushil Chandra, 47 Chesnut Avenue, Queens Road, Hull HU5 2RN, IN;
FERNÁNDEZ-GADEA, F.J., Johnson&Johnson Pharm. R&D, Division of Janssen-Cilag S.A., Calle Jarama, 75, Poligono Industrial, 45007 Toledo, ES
(74) Quaghebeur, Luc, et al, Janssen Pharmaceutica N.V., Patent Department, Turnhoutseweg 30, 2340 Beerse, BE

(51) (8) **EP 2102211 ***
C 07D 487/04
A 61K 31/519
A 61P 35/00
(23) 14.09.2010.
(30) US 20.11.2006. 860194 P
(86) PCT/US2007024368 20.11.2007.
(96) EP 07862212.3 20.11.2007. En
(87) WO2008063671 29.05.2008. 200822
(97) EP 2102211 23.09.2009. 200939 En
(41) 30.03.2011. 201113
(54) HETEROBICYCLIC METALLOPROTEASE INHIBITORS
(71) Alantos Pharmaceuticals Holding, Inc., M/s 28-2-C, One Amgen Center Drive, Thousand Oaks, CA 91320-1799, US
(72) NOLTE, Bert, Bonhoefferstrasse 3, 52078 Aachen, DE;
SUCHOLEIKI, Irving, 225 Mystic Valley Parkway, Winchester, Massachusetts 01890, US;
FEUERSTEIN, Tim, Eschenstrasse 11, 64625 Bensheim, DE;
GALLAGHER, JR. Brian M., 28 Orchard Street, Merrimac, Massachusetts 01860, US;
WU, Xinyuan, 935 Washington Street 14, Newton, Massachusetts 02460, US;
STEENECK, Christoph, Schulstrasse 8, 69221 Dossenheim, DE;
GEGE, Christian, Elsenzstrasse 7, 69256 Mauer, DE;
DENG, Hongbo, 178 Woodland Road, Southborough, Massachusetts 01772, US;
VAN VELDHUIZEN, Joshua, 700 Broadway E 309, Seattle, Washington 98102, US;
TAVERAS, Arthur, 6 Joslin Lane, Southborough, Massachusetts 01772, US
(74) Grünecker, Kinkeldey, Stockmair & Schwanhäusser, Anwaltssozietät, Leopoldstrasse 4, 80802 München, DE

(51) (8) **EP 1765827 ***
C 07D 487/14
C 07D 207/30
(23) 18.02.2011.
(30) US 30.06.2004. 584382 P
(86) PCT/US2005022882 30.06.2005.
(96) EP 05790928.5 30.06.2005. En
(87) WO2006004724 12.01.2006. 200602
(97) EP 1765827 28.03.2007. 200713 En
(41) 06.04.2011. 201114
(54) A METHOD FOR PREPARING PYRROLOTRIAZINE COMPOUNDS
(71) Bristol-Myers Squibb Company, Route 206 and Province Line Road, Princeton, NJ 08543-4000, US
(72) SHI, Zhongping, 20 North Wilson, West Windsor, NJ 08850, US;
HYNES, John, 95 Dispatch Drive, Washington Crossing, PA 18977, US;
PARLANTI, Luca, 114 Cascade Court, 7, Princeton, NJ 08540, US;
WROBLESKI, Stephen, T., 1507 South Branch Drive, Whitehouse Station, NJ 08889, US
(74) Vossius & Partner, Siebertstrasse 4, 81675 München, DE

(51) (8) **EP 2125825 ***
C 07D 491/04
A 61K 31/4741
A 61P 9/10
(23) 22.10.2010.
(86) PCT/US2006049478 27.12.2006.
(96) EP 06850027.1 27.12.2006. En
(87) WO2008079139 03.07.2008. 200827
(97) EP 2125825 02.12.2009. 200949 En
(41) 20.04.2011. 201116
(54) ABCA1 ELEVATING COMPOUNDS
(71) CV THERAPEUTICS, INC., 3172 Porter Drive, Palo Alto, CA 94304, US
(72) ABELMAN, Matthew, 809B Cuesta Drive, 163, Mountain View, CA 94040, US;
JIANG, Robert, 548 Glenmoor Circle, Milpitas, CA 95035, US;
ZABLOCKI, Jeff, 1910 Noel Drive, Los Altos, CA 94024, US;
KOLTUN, Dmitry, 1075 Grebe Street, Foster City, CA 94404, US;
BOZE, Melanie, 3900 Artesia Bend, Round Rock, TX 78681, US
(74) Schnappauf, Georg, et al, Dr. Volker Vossius, Patent- und Rechtsanwaltskanzlei, Geibelstrasse 6, 81679 München, DE

(51) (8) **EP 1776368 ***
C 07D 491/14
C 07D 487/04
C 07D 498/14
C 07D 471/14
C 07D 471/04
C 07D 487/14
C 07D 513/14
A 61K 31/55
A 61P 31/14
(23) 06.10.2010.
(30) US 09.08.2004. 608932 P
US 11.03.2005. 660555 P
US 14.07.2005. 181639

(86) PCT/US2005025234 15.07.2005.
(96) EP 05772099.7 15.07.2005. En
(87) WO2006020082 23.02.2006. 200608
(97) EP 1776368 25.04.2007. 200717 En
(41) 06.04.2011. 201114
(54) INHIBITORS OF HCV REPLICATION
(71) Bristol-Myers Squibb Company, Route 206 and Province Line Road, Princeton, NJ 08543-4000, US
(72) HUDYMA, Thomas, W., 105R Black Walnut Drive, Durham, Connecticut 06422, US;
ZHENG, Xiaofan, 46 Dundee Drive, Cheshire, Connecticut 06410, US;
HE, Feng, 276 Massachusetts Avenue, Apt. 311, Arlington, Massachusetts 02474, US;
DING, Min, 170 Rampart Drive, Glastonbury, Connecticut 06033, US;
BERGSTROM, Carl, P., 21 Paper Mill Drive, Madison, Connecticut 06443, US;
HEWAWASAM, Piyasena, 31 Brookview Lane, Middletown, Connecticut 06457, US;
MARTIN, Scott, W., 121 Hickory Circle, Middletown, Connecticut 06457, US;
GENTLES, Robert, G., 52 High Hill Road, Wallingford, Connecticut 06492, US
(74) Reitstötter - Kinzebach, Patentanwälte, Sternwartstrasse 4, 81679 München, DE

(51) (8) **EP 1781665 ***
C 07D 495/04
A 61K 31/5513
A 61P 25/18
(23) 05.10.2010.
(30) SI 28.07.2004. 200400219
(86) PCT/EP2005008218 28.07.2005.
(96) EP 05779020.6 28.07.2005. En
(87) WO2006010620 02.02.2006. 200605
(97) EP 1781665 09.05.2007. 200719 En
(41) 06.04.2011. 201114
(54) OLANZAPINE SALTS AND THEIR CONVERSION TO OLANZAPINE FREE BASE
(71) KRKA, tovarna zdravil, d.d., Novo mesto, Smarjeska cesta 6, 8501 Novo mesto, SI
(72) SIMONIC, Igor, Potok 46, 8351 Straza, SI;
LENARSIC, Roman, Trzaska Cesta 266/B, 1000 Ljubljana, SI;
KOTAR-JORDAN, Berta, Vodeniska 19, 8311 Kostanjevica na Krki, SI;
ZUPET, Rok, Janeza Rozica 6, 1211 Ljubljana, SI;
GNIDOVEC, Joze, Dobrava 47, 8222 Otozec, SI
(74) UEXKÜLL & STOLBERG, Patentanwälte, Beselerstrasse 4, 22607 Hamburg, DE

(51) (8) **EP 1851229 ***
C 07D 495/04
A 61K 31/4365
A 61P 35/00
(23) 31.08.2010.
(30) EP 09.02.2005. 05100895
EP 25.05.2005. 05104488
EP 14.12.2005. 05112158
(86) PCT/EP2006050782 08.02.2006.
(96) EP 06708126.5 08.02.2006. En
(87) WO2006084869 17.08.2006. 200633
(97) EP 1851229 07.11.2007. 200745 En
(41) 16.03.2011. 201111
(54) TETRAHYDROPYRIDOTHIOPHENES FOR THE TREATMENT OF PROLIFERATIVE DISEASES SUCH AS CANCER
(71) 4SC AG, Am Klopferspitz 19 a, 82152 Planegg - Martinsried, DE
(72) PEKARI, Klaus, Vogteistr. 45, 88441 Mittelbiberach, DE;
SCHMIDT, Mathias, Kornblumenweg 4, 78465 Konstanz, DE;
BÄR, Thomas, Berggässle 5, 78479 Reichenau, DE;
BECKERS, Thomas, Aeschenweg 12, 78464 Konstanz, DE;
BARTELS, Björn, Badener Str. 5-8, 78315 Radolfzell, DE
(74) Kilger, Ute, et al, Forrester & Boehmert, Pettenkoferstrasse 20-22, 80336 München, DE

(51) (8) **EP 1871778 ***
C 07D 498/22
(23) 14.09.2010.
(30) US 20.04.2005. 673006 P
(86) PCT/US2006014665 19.04.2006.
(96) EP 06750655.0 19.04.2006. En
(87) WO2006113768 26.10.2006. 200643
(97) EP 1871778 02.01.2008. 200801 En
(41) 16.03.2011. 201111
(54) FERMENTATION BROTH EXTRACTION OF K-252A
(71) ABBOTT LABORATORIES, CHAD 0377/AP6A-1, 100 Abbott Park Road, Abbott Park IL 60064-3500, US
(72) CHEMBURKAR, Sanjay, R., 509 Prescott, Gurnee, Illinois 60031, US;
ULREY, Stephen, S., 160 Grafton Court, Lake Bluff, Illinois 60044, US;
PRUYNE, Julie, J., 760 Strawberry Fields, Gurnee, Illinois 60031, US
(74) Modiano, Micaela Nadia, et al, Modiano Josif Pisanty & Staub Ltd, Thierschstrasse 11, 80538 München, DE

(51) (8) **EP 2044086 ***
C 07D 513/04
A 61K 31/519
A 61P 29/00
(23) 20.11.2010.
(30) US 30.06.2006. 818153 P
(86) PCT/US2007015079 28.06.2007.
(96) EP 07810020.3 28.06.2007. En
(87) WO2008005303 10.01.2008. 200802
(97) EP 2044086 08.04.2009. 200915 En
(41) 11.05.2011. 201119
(54) THIAZOLOPYRIMIDINE MODULATORS OF TRPV1
(71) Janssen Pharmaceutica NV, Turnhoutseweg 30, 2340 Beerse, BE
(72) BRANSTETTER, Bryan, James, 3504 Paseo De Los Americanos 67, Oceanside, CA 92056, US;
BREITENBUCHER, James, Guy, 2433 North Summit Circle Glen, Escondido, CA 92026, US;
LEBSACK, Alec, D., 13141 Sierra Mesa Court, San Diego, CA 92129, US;
XIAO, Wei, 4043 Carmel Springs Way, San Diego, CA 92130, US
(74) Warner, James Alexander, et al, Carpmaels & Ransford, One Southampton Row, London, WC1B 5HA, GB

(51) (8) **EP 2100897**
C 07F 9/10
A 23L 1/30
A 23L 1/29
C 12P 7/64
(23) 19.11.2010.
(96) EP 08101088.6 30.01.2008. En
(97) EP 2100897 16.09.2009. 200938 En
(41) 11.05.2011. 201119
(54) Lecithin based composition and its use in food
(71) BNLfood Investments SARL, Zone Industrielle Salzbaach, 9559 Wiltz, LU
(72) Thiry, Jean-François, Marvie 125, 6600 Bastogne, BE; Dejardin, Philippe, Clos Bois Lemoine 38, 4870 Trooz, BE; Schmitz, Christian, Rue de la Bouvire 3, 6690 Vielsalm, BE; Lignian, Jacques, Benonchamps 100, 6600 Bastogne, BE; Ramirez-Hernan, Philippe, Rue du Paradis 68, 4432 Alleur, BE;
De Meester, Fabien, Rue de Luxembourg 46, 6900 Marche-en-Famenne, BE
(74) Luys, Marie-José A.H., et al, Gevers, Intellectual Property House, Holidaystraat 5, 1831 Diegem, BE

(51) (8) **EP 1877414 ***
C 07F 9/38
(23) 03.11.2010.
(30) US 25.04.2005. 674644 P
(86) PCT/US2006015765 25.04.2006.
(96) EP 06751464.6 25.04.2006. En
(87) WO2006116471 02.11.2006. 200644
(97) EP 1877414 16.01.2008. 200803 En
(41) 27.04.2011. 201117
(54) ALTERING THE CRYSTAL SIZE DISTRIBUTION OF N-(PHOSPHONOMETHYL) IMINODIACETIC ACID FOR IMPROVED FILTRATION AND PRODUCT QUALITY
(71) Monsanto Technology, LLC, 800 North Lindbergh Boulevard, St. Louis, MO 63167, US
(72) RANGACHARI, Sunder S., Monsanto Company, 800 North Lindbergh Boulevard, St. Louis, MO 63167, US; FRIEDMAN, Todd C., Monsanto Company, 800 North Lindbergh Boulevard, St. Louis, MO 63167, US; BAYSDON, Sherrol Lee, Monsanto Company, 800 North Lindbergh Boulevard, St. Louis, MO 63167, US; BECHER, David Z., Monsanto Company, 800 North Lindbergh Boulevard, St. Louis, MO 63167, US
(74) Bosch, Henry, et al, Office Hanssens Colens, Square Marie-Louise, 40 bte 19, 1000 Bruxelles, BE

(51) (8) **EP 2227478 ***
C 07F 9/655
A 61K 31/506
C 07D 411/04
A 61P 31/18
(23) 25.08.2010.
(30) IN 29.11.2007. DE25022007
(86) PCT/IB2008051691 30.04.2008.
(96) EP 08738053.1 30.04.2008. En
(87) WO2009069012 04.06.2009. 200923
(97) EP 2227478 15.09.2010. 201037 En
(41) 23.03.2011. 201112
(54) PROCESS AND INTERMEDIATES FOR THE PREPARATION OF SUBSTITUTED 1, 3-OXATHIOLANES, ESPECIALLY LAMIVUDINE
(71) Ranbaxy Laboratories Limited, Plot No. 90, Sector-32, Gurgaon, Haryana 122 001, IN
(72) NAIR, Dinesh, Shashidharan, B-6/164 Samta Society, Subhanpura P.O., Baroda, Vadodara, Gujarat 390023, IN; RAI, Bishwa, Prakash, Jagdish Pur, Sohauly, Azamgarh, Uttar Pradesh 276308, IN;
MEERAN, Hashim, Nizar, Poovanathil, Nagoor, Uzhijethu House, Vettipuram, Pathanamthitta, Kerala 689645, IN; TEWARI, Neera, K-10/19 (First Floor) Phase - II, DLF, Qutab Enclave, Gurgaon, Haryana 122001, IN
(74) Cronin, Brian Harold John, et al, CRONIN Intellectual Property, Chemin de Précossy 31, 1260 Nyon, CH

(51) (8) **EP 1874788 ***
C 07H 9/04
C 07H 15/00
C 07H 3/02
A 61K 31/70
A 61K 31/7004
A 61K 31/7028
A 61K 31/7042
A 61P 37/00
A 61P 35/00
A 61P 17/00
A 61P 11/06
(23) 01.11.2010.
(86) PCT/IB2005001039 19.04.2005.
(96) EP 05718480.6 19.04.2005. En
(87) WO2006111783 26.10.2006. 200643
(97) EP 1874788 09.01.2008. 200802 En
(41) 20.04.2011. 201116
(54) MONOSACCHARIDE DERIVATIVES AS ANTI-INFLAMMATORY AND/OR ANTI-CANCER AGENTS
(71) Ranbaxy Laboratories Limited, Plot No. 90, Sector-32, Gurgaon, Haryana 122001, Delhi, IN
(72) SATTIGERI, Vishwajanani, Jitendra, N-323, Vijayrattan Vihar, Gurgaon, Haryana 122001, IN;
ARORA, Sudershan, K., A5/205, Sahara Grace, Next to Sahara Mall, MG Road, Gurgaon (Haryana), IN;
SALMAN, Mohammad, 12 Jackson Avenue, Princeton, NJ 08540, US;
PALLE, Venkata, P., D-011, Oakwood Estate, AkashneemMarg DLF-Phase III, Gurgaon, Haryana 122001, IN;
MUKHERJEE, Ashis, CC-9A, DDA Flats, Rajouri Garden, (G-8 Area) Hari Nagar Clock Tower, New Delhi, Delhi 110070, IN;
RAY, Abhijit, Sector C-1, Flat No. 1408, Vasant Kunj, New Delhi, Delhi 110070, IN;
SHIRUMALLA, Raj, Kumar, 36A, Navyug Adarsh Apartments, Vikas Puri, New Delhi, Delhi 110018, IN
(74) Cronin, Brian Harold John, et al, CRONIN Intellectual Property, Chemin de Précossy 31, 1260 Nyon, CH

(51) (8) **EP 1773857** *
C 07H 21/02
A 61K 48/00
A 61K 31/713
A 61K 31/7105
C 12N 15/88
(23) 29.10.2010.
(30) US 02.07.2004. 585301 P
US 19.07.2004. 589363 P
US 12.11.2004. 627326 P
US 25.03.2005. 665297 P
(86) PCT/CA2005001038 30.06.2005.
(96) EP 05761778.9 30.06.2005. En
(87) WO2006002538 12.01.2006. 200602
(97) EP 1773857 18.04.2007. 200716 En
(41) 20.04.2011. 201116
(54) IMMUNOSTIMULATORY SIRNA MOLECULES AND USES THEREFOR
(71) Protiva Biotherapeutics Inc., 100-3480 Gilmore Way, Burnaby, British Columbia V5G 4Y1, CA
(72) MACLACHLAN, Ian, 8040 Aves Terrace, Vancouver, British Columbia V4S 1ES, CA;
JUDGE, Adam, 1936 West 11th Avenue, Vancouver, British Columbia V6J 2C6, CA
(74) Campbell, Patrick John Henry, J.A. Kemp & Co., 14 South Square, Gray's Inn, London WC1R 5JJ, GB

(51) (7) **EP 1742960** *
C 07J 71/00
A 61K 31/58
A 61P 19/10
A 61P 25/28
(23) 02.03.2011.
(30) GB 28.04.2004. 0409567
(86) PCT/GB2005001635 28.04.2005.
(96) EP 05738225.1 28.04.2005. En
(87) WO2005105825 10.11.2005. 200545
(97) EP 1742960 17.01.2007. 200703 En
(41) 13.04.2011. 201115
(54) CRYSTALLINE AND AMORPHOUS FORMS OF SMILAGENIN
(71) PHYTOPHARM PLC, Corpus Christi House, 9 West Street, Godmanchester, Cambridgeshire PE29 2HY, GB
(72) TIFFIN, Peter, David, Phytopharm plc, Corpus Christi House, 9 West Street, Godmanchester, Cambridgeshire PE29 2HY, GB
(74) Barnes, Colin Lloyd, Stratagem IPM Limited, Forsters Wing, Anstey Hall, Maris Lane, Trumpington, Cambridge CB2 9LG, GB

(51) (8) **EP 1809650** *
C 07J 71/00
A 61K 31/58
A 61P 3/04
A 61P 25/28
(23) 02.03.2011.
(30) GB 05.11.2004. 0424528
(86) PCT/GB2005004266 04.11.2005.
(96) EP 05799915.3 04.11.2005. En
(87) WO2006048665 11.05.2006. 200619
(97) EP 1809650 25.07.2007. 200730 En
(41) 13.04.2011. 201115
(54) POLYMORPHS OF SARSAPOGENIN
(71) PHYTOPHARM PLC, Corpus Christi House, 9 West Street, Godmanchester, Cambridgeshire PE29 2HY, GB
(72) TIFFIN, Peter, David, Phytopharm PLC, Corpus Christi House, 9 West Street, Godmanchester, Cambridgeshire PE29 2HY, GB
(74) Barnes, Colin Lloyd, Stratagem IPM Limited, Forsters Wing, Anstey Hall, Maris Lane, Trumpington, Cambridge CB2 9LG, GB

(51) (8) **EP 2209796** *
C 07K 5/06
A 61P 31/22
(23) 20.07.2010.
(30) US 31.10.2007. 931408
(86) PCT/US2008081575 29.10.2008.
(96) EP 08845665.2 29.10.2008. En
(87) WO2009058856 07.05.2009. 200919
(97) EP 2209796 28.07.2010. 201030 En
(41) 16.03.2011. 201111
(54) MACROCYCLIC INHIBITORS OF HEPATITIS C VIRUS NS3 SERINE PROTEASE
(71) Schering Corporation, 2000 Galloping Hill Road, Kenilworth, NJ 07033, US
(72) VENKATRAMAN, Srikanth, 35 Roanoke Street, Woodbridge, New Jersey 07095, US;
NJOROGE, F., George, 11 Softwood Way, Warren, New Jersey 07059, US;
WU, Wanli, 802 Orange Street, 3rd Floor, New Haven, Connecticut 06511, US;
GIRIJAVALLABHAN, Viyyoor, 10 Maplewood Drive, Parsippany, NJ 07054, US;
MCKITTRICK, Brian, 14 Millbrook Road, New Vernon, New Jersey 07976, US;
SU, Jing, 1398 Graymill Drive, Scotch Plains, New Jersey 07076, US;
VELAZQUEZ, Francisco, 4 Alexandra Way, Clinton, New Jersey 08809, US;
PINTO, Patrick, A., 34 Battle Ridge Road, Morris Plains, New Jersey 07950, US
(74) Duckett, Anthony Joseph, et al, Mathys & Squire LLP, 120 Holborn, London, EC1N 2SQ, GB

(51) (8) **EP 1899368** *
C 07K 14/435
(23) 23.09.2010.
(30) US 26.05.2005. 685018 P
(86) PCT/US2006020000 24.05.2006.
(96) EP 06771007.9 24.05.2006. En
(87) WO2006127757 30.11.2006. 200648
(97) EP 1899368 19.03.2008. 200812 En
(41) 16.03.2011. 201111
(54) INTERFERON-IGG FUSION
(71) Schering Corporation, 2000 Galloping Hill Road, Kenilworth, NJ 07033-0530, US
(72) PRESTA, Leonard, G., 1900 Gough, No. 206, San Francisco, California 94109, US;
KISHNANI, Narendra, 34 Berkshire Way, East Brunswick, New Jersey 08816, US
(74) UEXKÜLL & STOLBERG, Patentanwälte, Beselerstrasse 4, 22607 Hamburg, DE

(51) (8) **EP 1846444** *
C 07K 14/47
C 07K 16/18
C 12N 15/11
A 61K 38/17
G 01N 33/53
C 12Q 1/68
(23) 13.11.2010.
(30) US 22.12.2004. 637759 P
(86) PCT/GB2005004900 16.12.2005.
(96) EP 05847503.9 16.12.2005. En
(87) WO2006067402 29.06.2006. 200626
(97) EP 1846444 24.10.2007. 200743 En
(41) 11.05.2011. 201119
(54) AGENTS INHIBITING THE CATHELIN-LIKE PROTEIN CAP18/LL-37
(71) Lipopeptide AB, Fogdevreten 2B, 171 77 Stockholm, SE
(72) STZHLE, Mona, Bastugatan 33, S-118 25 Stockholm, SE;
HEILBORN, Johan, Vanadisvägen 22, S-113 46 Stockholm, SE;
NILSSON, Margareta, Frohm, Stockbyvägen 5, S-182 78 Stocksund, SE;
WEBER, Günther, 62 rue de l'ermitage, F-37100 Tours, FR
(74) Smith, Stephen Edward, et al, Potter Clarkson LLP, Park View House, 58 The Ropewalk, Nottingham, NG1 5DD, GB

(51) (8) **EP 1805209** *
C 07K 14/475
C 07K 14/705
A 61K 38/00
(23) 18.11.2010.
(30) US 01.10.2004. 615371 P
(86) PCT/US2005035719 03.10.2005.
(96) EP 05851216.1 03.10.2005. En
(87) WO2006047049 04.05.2006. 200618
(97) EP 1805209 11.07.2007. 200728 En
(41) 04.05.2011. 201118
(54) NOGO-A POLYPEPTIDE FRAGMENTS, VARIANT NOGO RECEPTOR-1 POLYPEPTIDES, AND USES THEREOF
(71) Yale University, Two Whitney Avenue, New Haven, CT 06511, US
(72) STRITTMATTER, Stephen, M., 96 Tulip Tree Drive, Guilford, Connecticut 06437, US
(74) Adams, Harvey Vaughan John, et al, Mathys & Squire LLP, 120 Holborn, London, EC1N 2SQ, GB

(51) (8) **EP 1891100** *
C 07K 14/51
A 61K 38/10
A 61K 38/17
(23) 28.09.2010.
(30) US 03.05.2005. 677583 P
US 24.02.2006. 776847 P
US 13.03.2006. 782244 P
US 17.04.2006. 792645 P
US 25.04.2006. 410540
(86) PCT/US2006016345 28.04.2006.
(96) EP 06751835.7 28.04.2006. En
(87) WO2006119062 09.11.2006. 200645
(97) EP 1891100 27.02.2008. 200809 En
(41) 16.03.2011. 201111
(54) SCLEROSTIN EPITOPES
(71) UCB Pharma S.A., Allée de la Recherche 60, 1070 Brussels, BE;
Amgen Inc., One Amgen Center Drive, Thousand Oaks, CA 91320-1799, US
(72) LU, Hsieng, Sen, 2758 Rainfield Avenue, Westlake Village, California 91362, US;
PASZTY, Christopher, 1027 Westridge Drive, Ventura, California 93003, US;
ROBINSON, Martyn Kim, Nursery Cottage, Harvey Hill, Wooburn Green Buckinghamshire HP10 0JH, GB;
HENRY, Alistair James, 92 Cowley Road, Uxbridge Middlesex UB8 2LX, GB;
HOFFMANN, Kelly Sue, 795 Green Valley Drive, Newbury Park, California 91320, US;
LATHAM, John, 2409 10th Avenue West, Seattle, Washington 98119, US;
LAWSON, Alastair, 208 Bath Road, Slough Berkshire SL1 3WE, GB;
WINKLER, David, 127 George Street, Arlington, Massachusetts 02476-7326, US;
WINTERS, Aaron George, 2501 Pierpont Boulevard, Ventura, California 93001, US
(74) Campbell, Patrick John Henry, J.A. Kemp & Co., 14 South Square, Gray's Inn, London WC1R 5JJ, GB

(51) (8) **EP 1837346**
C 07K 14/535
(23) 01.10.2010.
(30) GB 21.03.2006. 0605684
(96) EP 07251157.9 20.03.2007. En
(97) EP 1837346 26.09.2007. 200739 En
(41) 30.03.2011. 201113
(54) Method for purifying granulocyte-colony stimulating factor
(71) Sicor Biotech UAB, V.A. Graiciuno 8, 02241 Vilnius, LT
(72) Bumelis, Vladas Algirads, Gaidziu str. 2, 10103 Vilnius, LT;
Loreta, Janeniene, Europos Parko str. 142, 14269 Vilnius, LT;
Pesliakas, Jonas Henrikas, Architektu 32-29, 04121 Vilnius, LT;
Rimkeviciene, Jurate (J rat Rimkevi ien), Konarskio 10-40, Vilnius 03123, LT;
Vaitkevicius, Arunas, S. Staneviciaus str. 96-67, Vilnius 07103, LT;
Zunda, Giedrius, Virsuliskiu 73-44, Vilnius 05123, LT;
Zvirblis, Gintautas, Gabijos str. 3-30, Vilnius 06111, LT
(74) Nachshen, Neil Jacob, et al, D Young & Co LLP, 120 Holborn, London EC1N 2DY, GB

(51) (8) **EP 1828246** *
C 07K 14/705
C 07K 14/715
C 07K 5/078
C 07K 5/02
C 07K 7/02
A 61K 38/04
(23) 20.10.2010.
(30) EP 20.12.2004. 04425929
(86) PCT/EP2005056847 16.12.2005.
(96) EP 05823931.0 16.12.2005. En
(87) WO2006067091 29.06.2006. 200626
(97) EP 1828246 05.09.2007. 200736 En
(41) 20.04.2011. 201116

(54) MYD88 HOMODIMERIZATION INHIBITORS
(71) SIGMA-TAU, Industrie Farmaceutiche Riunite S.p.A., Viale Shakespeare 47, 00144 Roma, IT
(72) Carminati, Paolo, SIGMA-TAU Industrie Farmaceutiche, Riunite S.p.A., Via Pontina, Km. 30, 400, 00040 Pomezia, IT; Gallo, Grazia, SIGMA-TAU Industrie Farmaceutiche, Riunite S.p.A., Via Pontina, Km 30, 400, 00040 Pomezia, IT; Fanto', Nicola, SIGMA-TAU Industrie Farmaceutiche, Riunite S.p.A., Via Pontina, Km 30, 400, 00040 Pomezia, IT; Ruggiero, Vito, SIGMA-TAU Industrie Farmaceutiche, Riunite S.p.A., Via Pontina, Km 30, 400, 00040 Pomezia, IT; Sassano, Marica, c/o Tecnogen S.c.p.A., Località la Fagianeria, 81013 Piana Di Monte Verna, IT; Mastroianni, Domenico, c/o Tecnogen S.c.p.A., Località la Fagianeria, 81013 Piana Di Monte Verna, IT
(74) Spadaro, Marco, et al, Studio Associato LEONE & SPADARO, Viale Europa, 15, 00144 Roma, IT

(51) (8) **EP 2049568 ***
C 07K 14/71
A 61K 38/04
(23) 10.11.2010.
(30) DK 07.04.2006. 200600500
(86) PCT/DK2007000171 03.04.2007.
(96) EP 07722551.4 03.04.2007. En
(87) WO2007115571 18.10.2007. 200742
(97) EP 2049568 22.04.2009. 200917 En
(41) 04.05.2011. 201118
(54) ERBB RECEPTOR-DERIVED PEPTIDE FRAGMENTS
(71) Københavns Universitet, Nørregade 10, 1017 København K, DK
(72) BOCK, Elisabeth, Tonysvej 20, 2920 Charlottenlund, DK; BEREZIN, Vladimir, Nørrebrogade 223, 1.th., 2200 Copenhagen N, DK; POVLSEN, Gro Klitgaard, Strindbergsvej 95, st., 2500 Valby, DK
(74) Høiberg A/S, St. Kongensgade 59 A, 1264 Copenhagen K, DK

(51) (8) **EP 1807450 ***
C 07K 16/00
C 07K 16/10
A 61P 31/18
(23) 19.10.2010.
(30) US 29.10.2004. 623394 P
(86) PCT/US2005039175 28.10.2005.
(96) EP 05819487.9 28.10.2005. En
(87) WO2006050219 11.05.2006. 200619
(97) EP 1807450 18.07.2007. 200729 En
(41) 13.04.2011. 201115
(54) METHOD OF SELECTION OF ANTI HIV-1-gp41 NEUTRALIZING HUMAN MONOCLONAL ANTIBODIES
(71) GOVERNMENT OF THE UNITED STATES OF AMERICA, as, represented by THE SECRETARY, DEPARTMENT OF HEALTH, AND HUMAN SERVICES, Office of Technology Transfer, 6011 Executive Boulevard, Suite 325, Rockville, MD 20852-3804, US
(72) DIMITROV, Dimiter, S., 1741 Northridge Ln., Frederick, MD 21702, US; ZHANG, Mei-yun, 2600 Carrington Way, Frederick, MD 21702, US
(74) Grünecker, Kinkeldey, Stockmair & Schwanhäusser, Anwaltssozietät, Leopoldstrasse 4, 80802 München, DE

(51) (8) **EP 1940878 ***
C 07K 16/00
C 07K 16/28
C 12N 15/72
(23) 01.09.2010.
(30) GB 04.10.2005. 0520169
(86) PCT/GB2006003640 29.09.2006.
(96) EP 06779587.2 29.09.2006. En
(87) WO2007039714 12.04.2007. 200715
(97) EP 1940878 09.07.2008. 200828 En
(41) 18.05.2011. 201120
(54) EXPRESSION CONTROL USING ANTIBODY EXPRESSION OPTIMISATION SEQUENCES
(71) UCB Pharma, S.A., 60, allée de la Recherche, 1070 Brussels, BE
(72) HUMPHREYS, David Paul, UCB Celltech, 208 Bath Road, Slough Berkshire SL1 3WE, GB; ELLIS, Mark, UCB Celltech, 208 Bath Road, Slough Berkshire SL1 3WE, GB
(74) Blanchard, Amanda Jane, UCB Celltech, 208 Bath Road, Slough, Berkshire SL1 3WE, GB

(51) (8) **EP 1851249 ***
C 07K 16/28
A 61P 35/00
A 61P 37/00
A 61K 39/395
(23) 21.09.2010.
(30) US 07.02.2005. 651111 P
US 10.06.2005. 689404 P
US 25.07.2005. 702571 P
(86) PCT/US2006004232 06.02.2006.
(96) EP 06734484.6 06.02.2006. En
(87) WO2006084264 10.08.2006. 200632
(97) EP 1851249 07.11.2007. 200745 En
(41) 16.03.2011. 201111
(54) CD20 ANTIBODY VARIANTS AND USES THEREOF
(71) Genentech, Inc., 1 DNA Way, South San Francisco CA 94080-4990, US
(72) NAKAMURA, Gerald, R., 1899 Lakebird Drive, San Jose, California 95124, US; LOWMAN, Henry, B., 400 San Juan Avenue, El Granada, California 94018, US; ADAMS, Camellia, W., 1529 Portola Drive, San Francisco, California 94127, US
(74) Walton, Seán Malcolm, et al, Mewburn Ellis LLP, 33 Gutter Lane, London, EC2V 8AS, GB

(51) (8) **EP 1984404 ***
C 07K 16/28
G 01N 33/564
G 01N 33/569
G 01N 33/574
G 01N 33/68
(23) 01.10.2010.
(30) US 13.02.2006. 772911 P
(86) PCT/US2007061988 12.02.2007.
(96) EP 07797130.7 12.02.2007. En
(87) WO2007117763 18.10.2007. 200742

(97) EP 1984404 29.10.2008. 200844 En
(41) 23.03.2011. 201112
(54) METHODS AND COMPOSITIONS FOR TARGETING RELT
(71) Genentech, Inc., 1 DNA Way, South San Francisco CA 94080-4990, US
(72) DIXIT, Vishva, 26750 Shady Oaks Court, Los Altos, California 94022, US;
KAYAGAKI, Nobuhiko, 1229 Capuchino 5, Burlingame, California 94010, US;
WU, Yan, 1160 Blythe Street, Foster City, CA 94404, US
(74) Denison, Christopher Marcus, et al, Mewburn Ellis LLP, 33 Gutter Lane, London, EC2V 8AS, GB

(51) (8) **EP 2152751 ***
C 07K 16/28
A 61K 47/48
(23) 26.10.2010.
(30) DK 31.05.2007. 200700792
(86) PCT/DK2008050126 30.05.2008.
(96) EP 08748825.0 30.05.2008. En
(87) WO2008145139 04.12.2008. 200849
(97) EP 2152751 17.02.2010. 201007 En
(41) 20.04.2011. 201116
(54) FUSION OR LINKED PROTEINS WITH EXTENDED HALF LIFE
(71) Genmab A/S, Bredgade 34, P.O. Box 9068, 1260 Copenhagen K, DK
(72) SCHUURMAN, Janine, Oranjeplantsoen 85, NL-1111 CH Diemen, NL;
VINK, Tom, Schaepmanstraat 25, NL-2406 DB Alphen Aan Den Rijn, NL;
VAN DE WINKEL, Jan, Verlengde Slotlaan 80, NL-3707 CK Zeist, NL;
LABRIJN, Aran Frank, 2e Jan van der Heijdenstraat 66-3R, NL-1074 XW Amsterdam, NL;
PARREN, Paul, Werdorperwaard 17, NL-3984 PR Odijk, NL;
BLEEKER, Willem karel, Keizersgracht 704, 1017 Amsterdam, NL;
BEURSKENS, Frank, H. R. Holststraat 40, 4013 VB Culemborg, NL;
VAN BERKEL, Patrick, 3e Westerparklaan 321, 3544 NH Utrecht, NL
(74) Van Den Hazel, Hendrik Bart, et al, Genmab A/S, Bredgade 34, P.O. Box 9068, 1260 Copenhagen K, DK

(51) (8) **EP 2160411 ***
C 07K 16/28
C 07K 16/46
C 12N 15/13
C 12N 5/20
A 61K 39/395
A 61P 7/00
(23) 09.11.2010.
(30) US 26.06.2007. 946168 P
EP 29.06.2007. 07012752
(86) PCT/EP2008058196 26.06.2008.
(96) EP 08774371.2 26.06.2008. En
(87) WO2009000894 31.12.2008. 200901
(97) EP 2160411 10.03.2010. 201010 En
(41) 04.05.2011. 201118
(54) ANTI-VPAC1 ANTIBODIES AND THEIR USES
(71) ThromboGenics N.V., Gaston Geenslaan 1, 3001 Heverlee, BE;
Life Sciences Research Partners VZW, Herestraat 49, 3000 Leuven, BE
(72) FRESON, Kathleen, Hernerweg 53, B-3730 Hoeselt, BE;
VAN GEET, Chris, Groenstraat 35, B-3221 Nieuwrode, BE;
HOYLAERTS, Marc, Bruineveld 146, B-3010 Kessel-Lo, BE;
STASSEN, Jean-Marie, Merellaan 31, B-3210 Lubbeek, BE
(74) Bird, William Edward, et al, Bird Goën & Co, Klein Dalenstraat 42A, 3020 Winksele, BE

(51) (8) **EP 1910419 ***
C 07K 16/30
C 12N 5/24
A 61K 39/395
G 01N 33/574
A 61P 35/00
(23) 10.03.2011.
(30) US 20.06.2005. 692092 P
US 21.04.2006. 793951 P
(86) PCT/US2006023099 14.06.2006.
(96) EP 06773116.6 14.06.2006. En
(87) WO2007001851 04.01.2007. 200701
(97) EP 1910419 16.04.2008. 200816 En
(41) 20.04.2011. 201116
(54) COMPOSITIONS AND METHODS FOR THE DIAGNOSIS AND TREATMENT OF TUMOR
(71) Genentech, Inc., 1 DNA Way, South San Francisco CA 94080-4990, US
(72) DENNIS, Mark, 120 Plymouth Avenue, San Carlos, California 94070, US;
MALLET, William, 441h Cork Harbour Circle, Redwood City, California 94065, US;
POLAKIS, Paul, 260 Corte Madera Avenue, Mill Valley, California 94941, US
(74) Woolley, Lindsey Claire, et al, Mewburn Ellis LLP, 33 Gutter Lane, London, EC2V 8AS, GB

(51) (8) **EP 1960435 ***
C 07K 16/46
(23) 09.11.2010.
(30) EP 15.12.2005. 05027530
(86) PCT/EP2006012078 14.12.2006.
(96) EP 06829628.4 14.12.2006. En
(87) WO2007068488 21.06.2007. 200725
(97) EP 1960435 27.08.2008. 200835 En
(41) 04.05.2011. 201118
(54) DOMAIN-GRAFTED ANTIBODIES
(71) Micromet AG, Staffelseestrasse 2, 81477 München, DE
(72) KUFER, Peter, Am Kapellenacker 13, 85368 Moosburg, DE;
RAUM, Tobias, Pinzenauerstr. 110, 81925 München, DE;
LUTTERBÜSE, Petra, Fliederstrasse 11, 82061 Neuried, DE;
SCHLERETH, Bernd, Erbacherstrasse 29 C, 64354 Spachbrücken-Reinheim, DE;
BRISCHWEIN, Klaus, Lichtenfelserstr. 18, 81243 München, DE;
HOFMEISTER, Robert, 15 Three Ring Rd, Scituate, MA 02066, US
(74) Dehmel, Albrecht, Dehmel & Bettenhausen, Patentanwälte, Herzogspitalstrasse 11, 80331 München, DE

(51) (8) **EP 1919956** *
C 07K 17/10
C 07K 17/04
C 07K 1/04
C 08J 3/075
C 08L 1/28
C 08L 5/00
C 08L 5/04
C 08L 5/06
C 08L 5/08
C 08L 5/12
C 08L 89/00
(23) 30.09.2010.
(86) PCT/CA2005001216 04.08.2005.
(96) EP 05777344.2 04.08.2005. En
(87) WO2007014447 08.02.2007. 200706
(97) EP 1919956 14.05.2008. 200820 En
(41) 30.03.2011. 201113
(54) GELATION OF UNDENATURED PROTEINS WITH POLYSACCHARIDES
(71) Institut National Polytechnique de Lorraine, 2 Avenue de la For?t de la Haye, 54500 Vandoeuvre Les Nancy, FR
(72) LANEUVILLE BALLESTER, Sandra I., 3185 de la Concorde, App. 314, Quebec, Quebec G1W 2V1, CA;
TURGEON, Sylvie L., 1768 rue Saint-Olivier, L'Ancienne-Lorette, Quebec G2E 5G1, CA;
SANCHEZ, Christian, 36 rue Charles Martel, Residence Charles Martel B4, 54000 Nancy, FR;
PAQUIN, Paul, 7593, rue des Grbes, Charny, Quebec G6X 2C2, CA
(74) Ors, Bernard, et al, Cabinet ORES, 36, rue de St Pétersbourg, 75008 Paris, FR

(51) (8) **EP 2016114** *
C 08G 73/02
(23) 26.11.2010.
(30) US 05.05.2006. 797966 P
(86) PCT/US2007010650 02.05.2007.
(96) EP 07776627.7 02.05.2007. En
(87) WO2007130463 15.11.2007. 200746
(97) EP 2016114 21.01.2009. 200904 En
(41) 18.05.2011. 201120
(54) AMINE CONDENSATION POLYMERS AS PHOSPHATE SEQUESTRANTS
(71) GENZYME CORPORATION, 500 Kendall Street, Cambridge, MA 02142, US
(72) HUVAL, Chad, C., 22 Foster Street, No. 1, Somerville, MA 02145, US;
DHAL, Pradeep, K., 7 Dempsey Way, Westford, MA 01886, US;
HOLMES-FARLEY, Stephen, Randall, 20 Norfolk Road, Arlington, MA 02476, US
(74) Ritter, Thomas Kurt, Jones Day, Prinzregentenstraße 11, 80538 München, DE

(51) (8) **EP 1721938**
C 08L 95/00
C 08K 3/34
C 08L 93/04
(23) 06.10.2010.
(30) ES 13.05.2005. 200501168
(96) EP 06009812.6 12.05.2006. Es
(97) EP 1721938 15.11.2006. 200646 En
(41) 30.03.2011. 201113
(54) Emulsifier for bituminous binders
(71) KAO CORPORATION, S.A., Puig dels Tudons 10, Centre Industrial Santiga, 08210 Barbera del Vallés - Barcelona, ES;
TOLSA S.A., Nunez de Balboa, 51 No. 4, E-28001 Madrid, ES
(72) Alvarez Berenguer, Antonio, Nunez de Balboa, 51, 28001 Madrid, ES;
Limpo Orozco, Francisco Javier, Nunez de Balboa, 51, 28001 Madrid, ES;
Pérez Gonzales, Manuel, Nunez de Balboa, 51, 28001 Madrid, ES;
Izquierdo Martinez, Laura, Nunez de Balboa, 51, 28001 Madrid, ES;
Punet Plensa, Antoni, Puig dels Tudons, 10, 08210 Barbera del Vallés, Barcelona, ES;
Lozano Salvatella, Lluis, Puig dels Tudons, 10, 08210 Barbera del Vallés, Barcelona, ES
(74) ABG Patentes, S.L., Avenida de Burgos 16D, Edificio Euromor, 28036 Madrid, ES

(51) (8) **EP 2004793** *
C 12C 5/02
(23) 03.11.2010.
(30) US 31.03.2006. 393745
(86) PCT/EP2007053189 02.04.2007.
(96) EP 07727661.6 02.04.2007. En
(87) WO2007113284 11.10.2007. 200741
(97) EP 2004793 24.12.2008. 200852 En
(41) 04.05.2011. 201118
(54) TEA-FLAVORED BEER
(71) InBev S.A., Brouwerijplein 1, 3000 Leuven, BE
(72) MENSOUR, Anthony, 19 Galley Road, Ancaster, Ontario L9G 4S8, CA;
VIAENE, Paula Cristiane, Brouwerijplein 1, B-3000 Leuven, BE
(74) Luys, Marie-José A.H., et al, Gevers, Intellectual Property House, Holidaystraat 5, 1831 Diegem, BE

(51) (8) **EP 1805297** *
C 12N 5/00
C 12N 5/02
C 12N 5/08
A 01N 63/00
A 01N 65/00
(23) 12.10.2010.
(30) US 30.09.2004. 957171
(86) PCT/US2005035030 29.09.2005.
(96) EP 05825074.7 29.09.2005. En
(87) WO2006037103 06.04.2006. 200614
(97) EP 1805297 11.07.2007. 200728 En
(41) 06.04.2011. 201114
(54) THE USE OF HUMAN STEM CELLS AND/OR FACTORS THEY PRODUCE TO PROMOTE ADULT MAMMALIAN CARDIAC REPAIR THROUGH CARDIOMYOCYTE CELL DIVISION
(71) The Trustees of Columbia University in the City of, New York, Broadway and West 116th Street, New York, NY 10027-6699, US;
The Research Foundation of State University of New, York, N-5002 Memorial Library, Stony Brook, NY 11794, US
(72) DORONIN, Sergey, V., 18 Stratton Lane, Stony Brook, NY 11790, US;

GAUDETTE, Glenn, 162 Jennifer Drive, Holden, MA 01520, US;
ROBINSON, Richard, B., 67 Roosevelt Street, Cresskill, NJ 07626, US;
ROSEN, Michael, R., 25 East 86th Street_Apt. 14C, New York, NY 10028, US;
COHEN, Ira, S., 23 Hawks Nest Road, Stony Brook, NY 11790, US;
BRINK, Peter, R., 101 Dyke Road, Setauket, NY 11733, US
(74) Pohlman, Sandra M., et al, df-mp, Fünf Höfe, Theatinerstrasse 16, 80333 München, DE

(51) (8) **EP 1841856 ***
C 12N 5/02
(23) 03.08.2010.
(30) US 28.01.2005. 647403 P
(86) PCT/CA2006000098 26.01.2006.
(96) EP 06701865.5 26.01.2006. En
(87) WO2006079205 03.08.2006. 200631
(97) EP 1841856 10.10.2007. 200741 En
(41) 30.03.2011. 201113
(54) A METHOD OF CRYOPRESERVING CELLS AND TISSUES BY LIPOSOMAL DELIVERY OF SUGARS TO ENHANCE POST-THAW VIABILITY
(71) Canadian Blood Services, 1800 Alta Vista Drive, Ottawa, Ontario K1G 4J5, CA
(72) ACKER, Jason P., 17 Heatherglen Close, Spruce Grove, Alberta T7X 4H9, CA;
GYONGYOSSY-ISSA, Maria, 1632 Stephens Street, Vancouver, British Columbia V6K 3V3, CA
(74) Jacobi, Markus Alexander, Isenbruck Bösl Hörschler LLP, Eastsite One, Seckenheimer Landstrasse 4, 68163 Mannheim, DE

(51) (8) **EP 1812558 ***
C 12N 5/06
(23) 16.03.2011.
(30) ES 04.10.2004. 200402355
(86) PCT/EP2005010811 04.10.2005.
(96) EP 05796904.0 04.10.2005. En
(87) WO2006037649 13.04.2006. 200615
(97) EP 1812558 01.08.2007. 200731 En
(41) 20.04.2011. 201116
(54) IDENTIFICATION AND ISOLATION OF MULTIPOTENT CELLS FROM NON-OSTEOCHONDRAL MESENCHYMAL TISSUE
(71) Cellerix, S.A., Parque Tecnológico de Madrid, Marconi, 1, 28760 Tres Cantos - Madrid, ES;
Universidad Autónoma de Madrid, Ciudad Universitaria de Cantoblanco, Ctra Colmenar Viejo, Km 15, 28049 Madrid, ES
(72) GARCÍA CASTRO, Rosa Ana, Parque Tecnológico de Madrid, Marconi, 1, E-28760 Tres Cantos - Madrid, ES;
FERNÁNDEZ MIGUEL, María Gema, Parque Tecnológico de Madrid, Marconi, 1, E-28760 Tres Cantos - Madrid, ES;
GARCÍA ARRANZ, Mariano, Ciudad Universitaria de Cantoblanco, Ctra. Colmenar Viejo Km 15, E-28049 Madrid, ES;
GONZÁLEZ DE LA PEAA, Manuel Angel, Parque Tecnológico de Madrid, Marconi, 1, E-28760 Tres Cantos - Madrid, ES;
GARCÍA OLMO, Damián, Ciudad Universitaria de Cantoblanco, Ctra. Colmenar Viejo Km 15, E-28049 Madrid, ES
(74) ABG Patentes, S.L., Avenida de Burgos 16D, Edificio Euromor, 28036 Madrid, ES

(51) (8) **EP 2167649 ***
C 12N 5/08
A 61K 35/14
A 61K 39/00
A 61P 35/00
(23) 30.09.2010.
(30) US 09.07.2007. 958875 P
(86) PCT/US2008008413 09.07.2008.
(96) EP 08780058.7 09.07.2008. En
(87) WO2009009063 15.01.2009. 200903
(97) EP 2167649 31.03.2010. 201013 En
(41) 30.03.2011. 201113
(54) IMMUNOTHERAPY FOR HEMATOLOGICAL MALIGNANCIES
(71) CELGENE CORPORATION, 86 Morris Avenue, Summit, NJ 07901, US
(72) MUNSHI, Nikhil, C., 44 Binney Street, M1B28, Boston, MA 02115, US;
SONG, Weihua, 44 Binney Street, M551, Boston, MA 02115, US;
EXILEY, Mark, A., 330 Brookline Avenue, HIM 925, Boston, MA 02115, US
(74) Weber, Martin, et al, Jones Day, Rechtsanwälte Attorneys-at-Law Patentanwälte, Prinzregentenstrasse 11, 80538 München, DE

(51) (8) **EP 2010654 ***
C 12N 9/62
C 12C 5/00
(23) 30.09.2010.
(30) EP 25.04.2006. 06113062
(86) PCT/EP2007053940 23.04.2007.
(96) EP 07728397.6 23.04.2007. En
(87) WO2007122210 01.11.2007. 200744
(97) EP 2010654 07.01.2009. 200902 En
(41) 23.03.2011. 201112
(54) PROLINE-SPECIFIC PROTEASES FREE FROM AMYLOLYTIC ACTIVITIES
(71) DSM IP Assets B.V., Het Overloon 1, 6411 TE Heerlen, NL
(72) EDENS, Luppo, Hoflaan 118, 3062 JL Rotterdam, NL;
BECKHOVEN, Van Rudolf Franciscus Wilhelmus C., Jacoba van Heinsbergstraat 2, 4854 EJ Bavel, NL;
TABELING, Michael Dennis, Ecodusweg 91, 2614 WS Delft, NL
(74) van Grieken-Plooster, Izabella Johanna, et al, DSM Intellectual Property, P.O. Box 130, 6100 AC Echt, NL

(51) (8) **EP 1783218**
C 12N 15/09
C 07K 14/18
C 07K 16/10
C 12N 5/10
C 12N 7/00
C 12Q 1/68
(23) 04.11.2010.
(30) JP 25.06.2004. 2004188543
JP 28.06.2004. 2004190144
JP 24.09.2004. 2004277677
(86) PCT/JP2005012162 24.06.2005.

(96) EP 05755873.6 24.06.2005. Ja
(87) WO2006001517 05.01.2006. 200601
(97) EP 1783218 09.05.2007. 200719 En
(41) 27.04.2011. 201117
(54) HCV RNA HAVING NOVEL SEQUENCE
(71) Advanced Life Science Institute, Inc., 10-23 Maruyamadai 2-chome, Wako-shi, Saitama 351-0112, JP
(72) YAGI, Shintaro, ADVANCED LIFE SCIENCE INSTITUTE INC, 10-23, Maruyamadai 2-chome, Wako-shi, Saitama 3510112, JP;
YAMAGUCHI, Kenjiro, ADVANCED LIFE SCIENCE INST., 10-23, Maruyamadai 2-chome, Wako-shi, Saitama 3510112, JP;
ORI, Kenichi, ADVANCED LIFE SCIENCE INSTITUTE INC., 10-23, Maruyamadai 2-chome, Wako-shi, Saitama 3510112, JP;
TANAKA, Eiji, 73-5, Okadamatsuoka, Matsumoto-shi, Nagano 3900312, JP;
KIYOSAWA, Kendo, 270-10, Souza, Matsumoto-shi, Nagano 3900305, JP;
MAKI, Noboru, ADVANCED LIFE SCIENCE INSTITUTE, INC, 10-23, Maruyamadai 2-chome, Wako-shi, Saitama 3510112, JP
(74) Denison, Christopher Marcus, Mewburn Ellis LLP, 33 Gutter Lane, London, EC2V 8AS, GB

(51) (8) **EP 1899467 ***
C 12N 15/11
(23) 01.11.2010.
(30) US 26.04.2005. 674896 P
(86) PCT/US2006015735 26.04.2006.
(96) EP 06751434.9 26.04.2006. En
(87) WO2006116458 02.11.2006. 200644
(97) EP 1899467 19.03.2008. 200812 En
(41) 27.04.2011. 201117
(54) MODIFIED OLIGORIBONUCLEOTIDE ANALOGS WITH ENHANCES IMMUNOSTIMULATORY ACTIVITY
(71) Coley Pharmaceutical GmbH, Merowingerplatz 1a, 40225 Düsseldorf, DE;
Coley Pharmaceutical Group, Inc., 93 Worcester Street, Suite 101, Wellesley, MA 02481, US
(72) LIPFORD, Grayson, 45 Grenville Road, Watertown, Massachusetts 02472, US;
KRIEG, Arthur, 173 Winding River Road, Wellesley, Massachusetts 02482, US;
UHLMANN, Eugen, Zum Talblick 31, D-61479 Glashuetten, DE
(74) England, Peter Michael, et al, Pfizer Limited, European Patent Department, Ramsgate Road, Sandwich, Kent CT13 9NJ, GB

(51) (8) **EP 2155876 ***
C 12N 15/11
(23) 28.12.2010.
(30) US 04.05.2007. 916003 P
(86) PCT/US2008062589 03.05.2008.
(96) EP 08755039.8 03.05.2008. En
(87) WO2008137814 13.11.2008. 200846
(97) EP 2155876 24.02.2010. 201008 En
(41) 20.04.2011. 201116
(54) METHODS FOR ASSESSING THE DELIVERY OF SMALL INHIBITORY RNA MOLECULES
(71) Abbott Laboratories, 100 Abbott Park Road, Abbott Park, Illinois 60064, US
(72) SHEN, Yu, 7227 Buchanan Drive, Gurnee, Illinois 60031, US;
LIN, Xiaoyu, 34198 Old Walnut Circle, Gurnee, Illinois 60031, US;
FESIK, Steve, 1099 Portsmouth Circle, Gurnee, Illinois 60031, US;
LI, Leiming, 1166 Gail Drive, Buffalo Grove, Illinois 60089, US
(74) Modiano, Micaela Nadia, et al, Modiano & Partners, Thierschstrasse 11, 80538 München, DE

(51) (8) **EP 2171059 ***
C 12N 15/11
A 61K 31/713
(23) 26.10.2010.
(30) EP 15.06.2007. 07110376
EP 13.08.2007. 07114265
(86) PCT/EP2008057476 13.06.2008.
(96) EP 08761002.8 13.06.2008. En
(87) WO2008152131 18.12.2008. 200851
(97) EP 2171059 07.04.2010. 201014 En
(41) 20.04.2011. 201116
(54) RNAI INHIBITION OF ALPHA-ENAC EXPRESSION
(71) Novartis AG, Lichtstrasse 35, 4056 Basel, CH
(72) VAN HEEKE, Gino, Novartis Horsham Research Centre, Wimblehurst Road, Horsham, West Sussex, Sussex RH12 5AB, GB;
HICKMAN, Emma, Novartis Horsham Research Centre, Wimblehurst Road, Horsham, West Sussex, Sussex RH12 5AB, GB;
DANAHAY, Henry Luke, Novartis Horsham Research Centre, Wimblehurst Road, Horsham, West Sussex, Sussex RH12 5AB, GB;
TAN, Pamela, Kalte Marter 8, 95326 Kulmbach, DE;
GEICK, Anke, Holderlin-Anlage 12, 95447 Bayreuth, DE;
VORNLOCHER, Hans-Peter, Albert-Einstein-Ring 43a, 95448 Bayreuth, DE
(74) Spinner, David Richard, Novartis Pharma AG, Patent Department, 4002 Basel, CH

(51) (8) **EP 1833490 ***
C 12N 15/113
A 61K 31/713
(23) 14.10.2010.
(30) US 07.01.2005. 642364 P
US 09.03.2005. 659828 P
(86) PCT/US2006000425 06.01.2006.
(96) EP 06717600.8 06.01.2006. En
(87) WO2006074346 13.07.2006. 200628
(97) EP 1833490 19.09.2007. 200738 En
(41) 20.04.2011. 201116
(54) RNAI MODULATION OF RSV AND THERAPEUTIC USES THEREOF
(71) Alnylam Pharmaceuticals Inc., 300 Third Street, Cambridge, MA 02142, US
(72) MEYERS, Rachel, 115 DeVONshire Road, Newton, MA 02468, US
(74) Vossius & Partner, P.O. Box 86 07 67, 81634 München, DE

(51) (8) **EP 1971686** *
C 12N 15/29
C 12N 15/09
C 12N 15/10
(23) 03.08.2010.
(30) US 13.01.2006. 758831 P
US 01.03.2006. 778568 P
(86) PCT/US2007000859 12.01.2007.
(96) EP 07718176.6 12.01.2007. En
(87) WO2007084385 26.07.2007. 200730
(97) EP 1971686 24.09.2008. 200839 En
(41) 18.05.2011. 201120
(54) NUCLEOTIDE SEQUENCES AND CORRESPONDING POLYPEPTIDES CONFERRING IMPROVED NITROGEN USE EFFICIENCY CHARACTERISTICS IN PLANTS
(71) Ceres, Inc., 1535 Rancho Conejo Boulevard, Newbury Park, CA 91320-1140, US;
Nadzan, Gregory, 6333 Canoga Ave. Apt. 148, Woodland Hills CA 91367, US;
Schneeberger, Richard, 7963 Paseo Aliso, Carlsbad CA 92009, US;
Feldmann, Kenneth A., 3806 Calle Mazatlan, Newbury Park CA 91320, US
(72) NADZAN, Greg, 2223 Los Feliz Drive, Apt 305, Thousand Oaks, California 92367, US;
SCHNEEBERGER, Richard, 7963 Paseo Aliso, Carlsbad, CA 92009, US;
FELDMANN, Kenneth, A., 3806 Calle Mazatlan, Newbury Park, CA 91320, US
(74) Elsy, David, et al, Withers & Rogers LLP, Goldings House, 2 Hays Lane, London SE1 2HW, GB

(51) (8) **EP 1846560** *
C 12N 15/82
C 12Q 1/68
C 12N 15/53
C 12N 9/02
C 12N 5/10
C 12N 5/04
A 01H 5/10
A 01H 5/00
(23) 20.10.2010.
(30) US 09.02.2005. 651568 P
(86) PCT/CA2006000156 07.02.2006.
(96) EP 06705112.8 07.02.2006. En
(87) WO2006084352 17.08.2006. 200633
(97) EP 1846560 24.10.2007. 200743 En
(41) 30.03.2011. 201113
(54) NOVEL OMEGA-3 FATTY ACID DESATURASE FAMILY MEMBERS AND USES THEREOF
(71) Bioriginal Food & Science Corp., 102 Melville Street, Saskatoon, Saskatchewan S7J 0R1, CA
(72) VRINTEN, Patricia, 310-725 Stillwater Drive, Saskatoon, Saskatchewan S7J 4H5, CA;
QIU, Xiao, 403 Kenderdine Road, Saskatoon, Saskatchewan S7N 3S5, CA
(74) Nash, David Allan, Haseltine Lake LLP, Redcliff Quay, 120 Redcliff Street, Bristol, BS1 6HU, GB

(51) (8) **EP 2109680** *
C 12N 15/85
(23) 15.10.2010.
(30) US 23.01.2007. 886219 P
(86) PCT/US2008051697 22.01.2008.
(96) EP 08728072.3 22.01.2008. En
(87) WO2008091888 31.07.2008. 200831
(97) EP 2109680 21.10.2009. 200943 En
(41) 06.04.2011. 201114
(54) NOVEL GENE DISRUPTIONS, COMPOSITIONS AND METHODS RELATING THERETO
(71) Lexicon Pharmaceuticals, Inc., 8800 Technology Forest Place, The Woodlands, TX 77381, US
(72) CUNNINGHAM, Jaime-jo, 7575 Gosling Road 1033, The Woodlands, TX 77382, US;
VOGEL, Peter, 7 Graylin Woods Place, The Woodlands, TX 77382, US
(74) Tollervey, Rebecca Marie, et al, Mewburn Ellis LLP, 33 Gutter Lane, London, EC2V 8AS, GB

(51) (8) **EP 1951890** *
C 12P 21/06
A 61K 38/00
(23) 17.11.2010.
(30) US 16.11.2005. 737855 P
(86) PCT/US2006044682 16.11.2006.
(96) EP 06837913.0 16.11.2006. En
(87) WO2007059312 24.05.2007. 200721
(97) EP 1951890 06.08.2008. 200832 En
(41) 11.05.2011. 201119
(54) METHODS AND COMPOSITIONS COMPRISING NON-NATURAL AMINO ACIDS
(71) Ambrx, Inc., 10975 North Torrey Pines Road, Suite 100, La Jolla CA 92037, US
(72) MIAO, Zhenwei, 15887 Sunnyfield Place, San Diego, CA 92127, US;
TIAN, Feng, 9003 Buckwheat Street, San Diego, CA 92129, US;
HAYS PUTNAM, Anna-Maria A., 11522 Cesped Drive, San Diego, CA 92124, US;
BUECHLER, Ying, 1343 Cassins Street, Carlsbad, CA 92011, US
(74) Mercer, Christopher Paul, Carpmaels & Ransford, One Southampton Row, London, WC1B 5HA, GB

(51) (7) **EP 1692305** *
C 12Q 1/48
C 12Q 1/02
C 12Q 1/00
A 61K 31/00
A 61K 31/352
A 61K 31/436
A 61K 31/7004
A 61K 31/7056
A 61P 9/00
A 61P 35/00
(23) 27.09.2010.
(30) US 24.11.2003. 720417
(86) PCT/US2004039675 24.11.2004.
(96) EP 04812236.0 24.11.2004. En
(87) WO2005052187 09.06.2005. 200523
(97) EP 1692305 23.08.2006. 200634 En
(41) 30.03.2011. 201113
(54) DIAGNOSIS AND TREATMENT OF DISEASES ARISING FROM DEFECTS IN THE TUBEROUS SCLEROSIS PATHWAY

(71) THE REGENTS OF THE UNIVERSITY OF MICHIGAN, 3003 South State Street, Ann Arbor, Mi 48109-1280, US
(72) GUAN, Kun-Liang, 3118 Fairhaven Court, Ann Arbor, MI 48105, US
(74) Glawe, Delfs, Moll, Patent- und Rechtsanwälte, Rothenbaumchaussee 58, 20148 Hamburg, DE

(51) (7) **EP 1753876 ***
C 12Q 1/68
(23) 03.11.2010.
(30) US 04.05.2004. 567889 P
(86) PCT/US2005016218 04.05.2005.
(96) EP 05747797.8 04.05.2005. En
(87) WO2005107430 17.11.2005. 200546
(97) EP 1753876 21.02.2007. 200708 En
(41) 27.04.2011. 201117
(54) INTERNAL CONTROL IN SITU HYBRIDIZATION
(71) Ventana Medical Systems, Inc., 1910 E. Innovation Park Drive, Tucson, Arizona 85755, US
(72) JI, Jay, 925 E. Via Velitas, Tucson, AZ 85718, US
(74) Perrey, Ralf, et al, Müller-Boré & Partner, Grafinger Strasse 2, 81671 München, DE

(51) (8) **EP 1957675 ***
C 12Q 1/68
G 06Q 50/00
(23) 16.09.2010.
(30) US 17.11.2005. 737900 P
(86) PCT/US2006044755 17.11.2006.
(96) EP 06837966.8 17.11.2006. En
(87) WO2007061881 31.05.2007. 200722
(97) EP 1957675 20.08.2008. 200834 En
(41) 23.03.2011. 201112
(54) SYSTEMS AND METHODS FOR THE BIOMETRIC ANALYSIS OF INDEX FOUNDER POPULATIONS
(71) Motif Biosciences, Inc., 330 Madison Avenue, 31st Floor, New York, NY 10017, US
(72) STEPHENS, Joel, C., 46 Crabapple Lane, Guilford, CT 06437, US;
FLICEK, Joseph, R., One West 67th Street, Apt. 411, New York, NY 10023, US
(74) Weber, Martin, et al, Jones Day, Rechtsanwälte Attorneys-at-Law Patentanwälte, Prinzregentenstrasse 11, 80538 München, DE

(51) (8) **EP 1999274 ***
C 12Q 1/68
(23) 19.10.2010.
(30) US 02.03.2006. 778284 P
(86) PCT/US2007005269 02.03.2007.
(96) EP 07751997.3 02.03.2007. En
(87) WO2007103116 13.09.2007. 200737
(97) EP 1999274 10.12.2008. 200850 En
(41) 13.04.2011. 201115
(54) METHODS AND SYSTEMS FOR EVALUATING HEALTH RISK FACTORS BY MEASUREMENT OF DNA DAMAGE AND DNA REPAIR
(71) Laboratory Corporation of America Holdings, 430 South Spring Street, Burlington, NC 27215-5838, US
(72) ALBRECHT, Jeffrey, 1830 11th Street, 1, Santa Monica, California 90404, US;
GALA, Francoise, 915 North Spaulding Avenue, 1, West Hollywood, California 90046, US;
CONRAD, Andrew, 23456 (88) Malibu Colony Road, Malibu, California 90265, US;
GRANT, Russell, 201 Gardner Circle, Chapel Hill, North Carolina 27516, US
(74) Boff, James Charles, et al, Phillips & Leigh, 5 Pemberton Row, London EC4A 3BA, GB

(51) (8) **EP 2079852 ***
C 12Q 1/68
(23) 19.10.2010.
(30) US 10.10.2006. 828943 P
US 29.03.2007. 908923 P
(86) PCT/US2007080732 08.10.2007.
(96) EP 07868391.9 08.10.2007. En
(87) WO2008057691 15.05.2008. 200820
(97) EP 2079852 22.07.2009. 200930 En
(41) 13.04.2011. 201115
(54) SNP DETECTION AND OTHER METHODS FOR CHARACTERIZING AND TREATING BIPOLAR DISORDER AND OTHER AILMENTS
(71) The Board of Trustees of, The Leland Stanford Junior University, 1705 El Camino Real, Palo Alto CA 94306-1106, US
(72) AKIL, Huda, 3351 Windshadow Drive, Ann Arbor, Michigan 48105, US;
WATSON, Stanley J., 3351 Windshadow Drive, Ann Arbor, Michigan 48105, US;
EVANS, Simon J., 334 Ferman Street, Milan, Michigan 48160, US;
TURNER, Cortney, 4816 Washtenaw Avenue, Apt. B3, Ann Arbor, Michigan 48108, US;
BERNARD, Rene, 2938 Whittier Court, Ann Arbor, Michigan 48104, US;
KERMAN, Ilan, 5580 Plymouth Road, Ann Arbor, Michigan 48105, US;
THOMPSON, Robert C., 3208 Farmbrook Court, Ann Arbor, Michigan 48108, US;
BURMEISTER, Margit, 3544 Chatham Way, Ann Arbor, Michigan 48105, US;
SCOTT, Laura J., 1266 Kensington Drive, Ann Arbor, Michigan 48104, US;
MENG, Fan, 3038 Honeysuckle Drive, Ann Arbor, Michigan 48103, US;
BOEHNKE, Michael, 2311 Delaware Drive, Ann Arbor, Michigan 48103, US;
BUNNEY, William E., 737 Kendall Drive, Laguna Beach, California 92651, US;
VAWTER, Marquis P., 28361 Via Alfonse, Laguna Niguel, California 92677, US;
JONES, Edward G., P.O. Box 1259, Winters, California 95694, US;
CHOUDARY, Prabhakara V., 1522 Santa Rosa Street, Davis, California 95616, US;
MYERS, Richard M., 957 Cottrell Way, Stanford, California 94305, US;
SCHATZBERG, Alan F., 10380 West Loyola Drive, Los Altos, California 94024, US;
LI, Jun, 559 Loma Verde Avenue, Palo Alto, California 94306, US;
ABSHER, Devin, 2019, Los Trancos Drive, Irvine, California 92612, US

(74) Campbell, Patrick John Henry, J.A. Kemp & Co., 14 South Square, Gray's Inn, London WC1R 5JJ, GB

(51) (8) **EP 2126113 ***
C 12Q 1/68
(23) 16.11.2010.
(30) US 15.01.2007. 884979 P
(86) PCT/EP2008000657 15.01.2008.
(96) EP 08707360.7 15.01.2008. En
(87) WO2008087049 24.07.2008. 200830
(97) EP 2126113 02.12.2009. 200949 En
(41) 04.05.2011. 201118
(54) DIAGNOSTIC MARKER AND PLATFORM FOR DRUG DESIGN IN MYOCARDIAL INFARCTION AND HEART FAILURE
(71) Centre de Recherche Public de la, Santé, 1 A- 1B Rue Thomas Edison, 1445 Strassen, LU
(72) WAGNER, Daniel, R., 15 rue du parc, L-8083 Bertrange, LU;
ROUY, Didier, c/o Centre de Recherche Public de la Santé, 18, rue Dicks, L-1417 Luxembourg, LU;
DEVAUX, Yvan, 28 rue de Mirecourt, F-54630 Flavigny/Moselle, FR
(74) Lampe, Sigmar, Marks&Clerk (Luxembourg) LLP, B.P. 1775, 1017 Luxembourg, LU

(51) (8) **EP 2064351 ***
C 12Q 1/70
C 12Q 1/68
(23) 04.03.2011.
(30) US 08.09.2006. 843001 P
(86) PCT/EP2007007789 06.09.2007.
(96) EP 07802185.4 06.09.2007. En
(87) WO2008028665 13.03.2008. 200811
(97) EP 2064351 03.06.2009. 200923 En
(41) 11.05.2011. 201119
(54) PHENOTYPIC AND GENOTYPIC DIFFERENCES OF MVA STRAINS
(71) Bavarian Nordic A/S, Boegeskovvej 9, 3490 Kvistgaard, DK
(72) CHAPLIN, Paul, Bürgerstrasse 9, 81925 München, DE

(51) (8) **EP 1828439 ***
C 25C 3/12
C 25C 7/02
(23) 17.11.2010.
(30) AU 28.10.2004. 2004906236
(86) PCT/AU2005001665 27.10.2005.
(96) EP 05799180.4 27.10.2005. En
(87) WO2006045154 04.05.2006. 200618
(97) EP 1828439 05.09.2007. 200736 En
(41) 18.05.2011. 201120
(54) PROTECTIVE ANODE COATINGS
(71) Commonwealth Scientific and Industrial, Research Organization, Limestone Avenue, Campbell, Australian Capital Territory 2612, AU
(72) JAHEDI, Mahnaz, 1/ 2 Theodore Court, Toorak, Victoria 3142, AU;
GULIZIA, Enzo, 1/7 Marama Street, Coburg North, Victoria 3058, AU;
OH, Chull Hee, 17 Bowman Street, Mt. Waverley, Victoria 3149, AU;
GULIZIA, Stefan, 6 Willowtree Drive, Werribee, Victoria 3030, AU
(74) Benson, John Everett, J. A. Kemp & Co., 14 South Square, Gray's Inn, London WC1R 5JJ, GB

(51) (8) **EP 2115197 ***
D 04B 21/14
A 41D 27/06
(23) 29.10.2010.
(30) DE 09.02.2007. 102007006568
(86) PCT/EP2008051192 31.01.2008.
(96) EP 08716748.2 31.01.2008. De
(87) WO2008095855 14.08.2008. 200833
(97) EP 2115197 11.11.2009. 200946 De
(41) 27.04.2011. 201117
(54) ELASTIC INSERT, METHOD FOR THE PRODUCTION THEREOF AND USE
(71) Kufner Textil GmbH, Irschenhauser Strasse 10, 81379 München, DE
(72) SCHERBEL, Ulrich, Windbauerstrasse 18, 81825 München, DE;
GERLICHER, Antje, Eulenspiegelstrasse 15, 81739 München, DE
(74) HOFFMANN EITLE, Patent- und Rechtsanwälte, Arabellastraße 4, 81925 München, DE

(51) (8) **EP 1885955 ***
E 01C 5/22
E 02D 29/14
E 03F 5/06
E 01F 9/04
(23) 07.01.2010.
(30) DE 19.03.2005. 102005013160
DE 08.10.2005. 102005048326
(86) PCT/DE2006000132 29.01.2006.
(96) EP 06705863.6 29.01.2006. De
(87) WO2006099823 28.09.2006. 200639
(97) EP 1885955 13.02.2008. 200807 De
(41) 23.03.2011. 201112
(54) STRUCTURAL UNIT
(71) Terraelast AG, Mitterfeldstrasse 2, 82054 Sauerlach, DE
(72) HARTENBURG, Roger, Weinheimer Weg 5, 68623 Lampertheim, DE;
LAHL, Berthold, Rosenstrasse 5, 85551 Kirchheim, DE;
KROMER, Lothar, Bavariastr. 2, 82054 Sauerlach, DE

(51) (8) **EP 1893812 ***
E 01C 7/30
E 01C 7/32
E 01C 7/08
(23) 01.10.2010.
(86) PCT/DE2005000505 18.03.2005.
(96) EP 05732214.1 18.03.2005. De
(87) WO2006099819 28.09.2006. 200639
(97) EP 1893812 05.03.2008. 200810 De
(41) 20.04.2011. 201116
(54) CARRIAGEWAY AND SURFACE FOR CARRIAGEWAYS
(71) Terraelast AG, Mitterfeldstrasse 2, 82054 Sauerlach, DE
(72) HARTENBURG, Roger, Weinheimer Weg 5, 68623 Lampertheim, DE;
LAHL, Berthold, Rosenstr. 5, 85551 Kirchheim, DE;

KROMER, Lothar, Nördliche Münchener Str. 22c, 82031 Grünwald, DE

(51) (8) **EP 1971726 ***
E 04H 7/00
(23) 18.11.2010.
(30) US 29.12.2005. 323708
(86) PCT/US2006062191 15.12.2006.
(96) EP 06840289.0 15.12.2006. En
(87) WO2007076307 05.07.2007. 200727
(97) EP 1971726 24.09.2008. 200839 En
(41) 18.05.2011. 201120
(54) A MULTI-FORM SILO STORAGE SYSTEM
(71) Chelak, Yaroslaw Steve, 8 Tingley Road, Morristown NJ 07960, US
(72) Chelak, Yaroslaw Steve, 8 Tingley Road, Morristown NJ 07960, US
(74) Hibbert, Juliet Jane Grace, et al, Kilburn & Strode LLP, 20 Red Lion Street, London WC1R 4PJ, GB

(51) (8) **EP 2112300**
E 04H 12/22
(23) 08.02.2011.
(30) DE 25.04.2008. 102008020847
(96) EP 09003306.9 06.03.2009. De
(97) EP 2112300 28.10.2009. 200944 De
(41) 16.03.2011. 201111
(54) Foundation body, method for producing a foundation body and method for setting up a mast
(71) ADC GmbH, Beeskowdamm 3-11, 14167 Berlin, DE
(72) Kraft, Wolfgang, DIPL.-ING., Friedrich-Franz-Strasse 18, 12103 Berlin, DE

(51) (8) **EP 2031160**
E 05B 19/02
E 05B 19/06
(23) 08.09.2010.
(30) DE 03.09.2007. 102007041964
(96) EP 08075698.4 11.08.2008. De
(97) EP 2031160 04.03.2009. 200910 De
(41) 16.03.2011. 201111
(54) Lock-key combination
(71) ASSA ABLOY Sicherheitstechnik GmbH, Bildstockstrasse 20, 72458 Albstadt, DE
(72) Arndt, Manfred, Seydlitzstrasse 47, 12249 Berlin, DE
(74) Meissner, Peter E., et al, Meissner & Meissner, Patentanwaltsbüro, Hohenzollerndamm 89, 14199 Berlin, DE

(51) (8) **EP 1736631**
E 06B 9/17
(23) 19.03.2011.
(30) DE 25.06.2005. 102005029578
(96) EP 06009855.5 12.05.2006. De
(97) EP 1736631 27.12.2006. 200652 De
(41) 04.05.2011. 201118
(54) Roller shutter box
(71) Inoutic / Deceuninck GmbH, Bayerwaldstrasse 18, 94327 Bogen, DE
(72) Pielmeier, Günter, Schönthal 57, 94327 Bogen, DE

(51) (7) **EP 1584782**
E 06B 9/86
(23) 02.11.2010.
(30) DE 07.04.2004. 102004017081
(96) EP 05007577.9 06.04.2005. De
(97) EP 1584782 12.10.2005. 200541 De
(41) 11.05.2011. 201119
(54) Method, locking system and locking mechanism to automatically lock a roller shutter
(71) Gollnast System-Anlagen GmbH, Am Felde 5, 21629 Neu Wulmstorf, DE
(72) Gollnast, Christoph, Am Felde 7, 21629 Neu Wulmstorf, DE
(74) Hansen, Jochen, Patentanwaltskanzlei Hansen, Eisenbahnstrasse 5, 21680 Stade, DE

(51) (8) **EP 2113653**
F 02M 59/06
F 02M 59/10
F 04B 53/00
F 04B 53/08
F 04B 53/18
(23) 25.11.2010.
(96) EP 08155497.4 30.04.2008. En
(97) EP 2113653 04.11.2009. 200945 En
(41) 18.05.2011. 201120
(54) Fluid Pump
(71) Delphi Technologies Holding S.à.r.l., Avenue de Luxembourg, 4940 Bascharage, LU
(72) Brown, Andrew, 6 Twymans Mill West Street, Faversham Kent ME13 7RU, GB;
Bennewitz, Henry, 32 Shaw Close, Maidstone Kent ME14 5DN, GB
(74) Gregory, John David Charles, Delphi Diesel Systems, Patent Department, Courteney Road, Gillingham, Kent ME8 0RU, GB

(51) (7) **EP 1718875 ***
F 16B 2/14
F 16B 5/06
F 16B 21/09
F 16B 21/16
B 25B 31/00
(23) 10.06.2010.
(30) DE 26.02.2004. 202004002953 U
(86) PCT/EP2005001983 25.02.2005.
(96) EP 05731046.8 25.02.2005. De
(87) WO2005083274 09.09.2005. 200536
(97) EP 1718875 08.11.2006. 200645 De
(41) 30.03.2011. 201113
(54) CONNECTING UNIT
(71) Spirit2go GmbH, Friedrich-Ebert-Strasse 42, 46535 Dinslaken, DE
(72) Winkler, Wilhelm, In der Loh 2, 40668 Meerbusch, DE

(51) (8) **EP 2140150 ***
F 16B 7/18
E 04B 1/19
E 04H 12/18
F 16B 7/20
F 16B 21/04
(23) 03.11.2010.
(30) GR 04.04.2007. 20070100204
(86) PCT/GR2008000021 03.04.2008.
(96) EP 08719105.2 03.04.2008. En
(87) WO2008122827 16.10.2008. 200842

(97) EP 2140150 06.01.2010. 201001 En
(41) 27.04.2011. 201117
(54) VARIABLE AND FIXED JOINTS-NODES WITH EMBEDDED 2-PART MECHANICAL CONNECTOR FOR LATERAL INTERCONNECTION OF TUBES RODS BEAMS FOR CONSTRUCTION OF TRUSSES
(71) Andrikopoulos, Themistoklis, Thesi Marmaro, P.O. Box 4908, 190 01 Keratea, Attiki, GR
(72) Andrikopoulos, Themistoklis, Thesi Marmaro, P.O. Box 4908, 190 01 Keratea, Attiki, GR
(74) Roukounas, Dimitrios, 13, Agamemnonos Street, 155 61 Holargos, Athens, GR

(51) (8) **EP 1707837**
F 16D 41/10
(23) 01.10.2010.
(30) US 28.03.2005. 90097
US 24.03.2006. 277433
(96) EP 06251647.1 28.03.2006. En
(97) EP 1707837 04.10.2006. 200640 En
(41) 23.03.2011. 201112
(54) Bi-directional overrunning clutch for a transaxle
(71) Tuff Torq Corporation, 5943 Commerce Boulevard, Morristown, TN 37814-1051, US
(72) Irikura, Koji, 1428 Darbee Drive, Morristown, Tennessee 37814, US;
Wieber, Donald, 290 Springwood Drive, Bean Station, Tennessee 37708, US
(74) Carter, Stephen John, et al, Mewburn Ellis LLP, 33 Gutter Lane, London, EC2V 8AS, GB

(51) (8) **EP 1967764**
F 16H 48/16
B 60K 17/35
B 60K 23/06
(23) 04.10.2010.
(30) US 09.03.2007. 684300
(96) EP 08250797.1 07.03.2008. En
(97) EP 1967764 10.09.2008. 200837 En
(41) 30.03.2011. 201113
(54) Central differential for a working vehicle
(71) Tuff Torq Corporation, 5943 Commerce Boulevard, Morristown, TN 37814-1051, US
(72) Irikura, Koji, 1428 Darbec Drive, Morristown, Tennessee 37814, US;
Wieber, Donald, 290 Springwood Drive, Bean Station, Tennessee 37708, US
(74) Carter, Stephen John, et al, Mewburn Ellis LLP, 33 Gutter Lane, London, EC2V 8AS, GB

(51) (8) **EP 1802901 ***
F 16K 11/07
(23) 22.09.2010.
(30) FR 07.10.2004. 0452292
(86) PCT/FR2005050743 15.09.2005.
(96) EP 05800488.8 15.09.2005. Fr
(87) WO2006037909 13.04.2006. 200615
(97) EP 1802901 04.07.2007. 200727 Fr
(41) 23.03.2011. 201112
(54) FLUID DISTRIBUTION AND REGULATION VALVE AND SYSTEM FOR SUPPLYING GAS DERIVED FROM TWO SOURCES COMPRISING SAME
(71) L'AIR LIQUIDE, Société Anonyme pour l'Etude, et l'Exploitation des Procédés Georges Claude, 75, quai d'Orsay, 75007 Paris, FR
(72) ARNAULT, Jean, 425, chemin de la Veyrie, F-38330 SAINT NAZAIRE LES EYMES, FR;
CAZENAVE, Jean-Michel, 38, rue de Belledonne, F-38180 SEYSSINS, FR
(74) De Cuenca, Emmanuel Jaime, et al, L'Air Liquide S.A., Direction Propriété Intellectuelle, 75 Quai d'Orsay, 75321 Paris Cedex 07, FR

(51) (7) **EP 1697676 ***
F 16L 37/40
(23) 21.09.2010.
(30) US 11.12.2003. 734097
(86) PCT/US2004041047 09.12.2004.
(96) EP 04813372.2 09.12.2004. En
(87) WO2005061943 07.07.2005. 200527
(97) EP 1697676 06.09.2006. 200636 En
(41) 23.03.2011. 201112
(54) STEAM STOP FOR STEAM CLEANER
(71) Euro-Pro Operating, LLC, 210 Washington street, West Newton, MA 02465, US
(72) REESE, Chad, A., 1959 Winway Road, Auburn, AL 36830, US
(74) Cordina, Kevin John, et al, Olswang LLP, 90 High Holborn, London WC1V 6XX, GB

(51) (8) **EP 1948990 ***
F 16L 55/165
(23) 28.09.2010.
(30) DE 14.11.2005. 102005056266
DE 14.11.2005. 202005018452 U
(86) PCT/EP2006010853 13.11.2006.
(96) EP 06818494.4 13.11.2006. De
(87) WO2007054350 18.05.2007. 200720
(97) EP 1948990 30.07.2008. 200831 De
(41) 30.03.2011. 201113
(54) FLEXIBLE INSERT TUBE FOR THE LINING OF PIPELINES AND OF DUCTS, IN PARTICULAR OF SEWERS
(71) Impreg Holding ApS, Industriparken 22C, 2750 Ballerup, DK
(72) PAPP, Robert, Tannenweg 7, 71159 Mötzingen, DE
(74) Crazzolara, Helmut, Patentanwälte Bartels & Partner, Lange Strasse 51, 70174 Stuttgart, DE

(51) (8) **EP 2088363**
F 21V 1/00
F 21V 11/00
F 21W 121/00
(23) 20.07.2010.
(96) EP 08151167.7 07.02.2008. En
(97) EP 2088363 12.08.2009. 200933 En
(41) 13.04.2011. 201115
(54) A lamp shade made of a spiral coil spring
(71) Laursen, Dan, Vorrevej 30 V, 8541 Skødstrup, DK
(72) Laursen, Dan, Vorrevej 30 V, 8541 Skødstrup, DK

(51) (7) **EP 1690060 ***
F 41G 1/00
(23) 16.09.2010.
(30) US 12.11.2003. 706184

(86) PCT/US2004037947 12.11.2004.
(96) EP 04810925.0 12.11.2004. En
(87) WO2005047805 26.05.2005. 200521
(97) EP 1690060 16.08.2006. 200633 En
(41) 23.03.2011. 201112
(54) APPARATUS AND METHOD FOR CALCULATING AIMING POINT INFORMATION
(71) Horus Vision, LLC, 659 Huntington Avenue, San Bruno, CA 94066, US
(72) SAMMUT, Dennis, J., 1 Eucalyptus Court, Woodside, CA 94062, US;
BUELL, Dickinson, 853 Hancock Street, 920, Hayward, CA 94544, US;
CHAO, Lawrence, 7955 Phaeton Drive, Oakland, CA 94605, US
(74) Glawe, Delfs, Moll, Patent- und Rechtsanwälte, Rothenbaumchaussee 58, 20148 Hamburg, DE

(51) (8) **EP 2146177**
F 41H 1/08
A 42B 3/12
B 29C 33/48
B 29C 45/00
B 29C 45/44
B 29C 65/04
(23) 01.10.2010.
(30) US 22.03.2007. 689541
(96) EP 09173478.0 13.03.2008. En
(97) EP 2146177 20.01.2010. 201003 En
(41) 30.03.2011. 201113
(54) Method of making a protective structure
(71) Xenith, LLC, 29 Commonwealth Avenue, Boston, MA 02116, US
(72) Ferrara, Vincent R., 115 Crest Road, Wellesley, MA 02210, US
(74) Rupprecht, Kay, et al, Meissner, Bolte & Partner GbR, Widenmayerstraße 48, 80538 München, DE

(51) (8) **EP 1952121 ***
G 01N 21/00
G 01N 21/75
(23) 26.11.2010.
(30) US 13.07.2005. 698726 P
US 12.07.2006. 485402
(86) PCT/US2006027274 13.07.2006.
(96) EP 06787214.3 13.07.2006. En
(87) WO2007009049 18.01.2007. 200703
(97) EP 1952121 06.08.2008. 200832 En
(41) 06.04.2011. 201114
(54) SYSTEM AND METHOD FOR READING A TEST STRIP
(71) FCC, LLC d/b/a First Growth Capital, Mr. Thomas F. Berner, Executive Vice, President & General Counsel, 515 North Flagler Drive, Suite 700, West Palm Beach, FL 33401, US;
Hutchinson, Michael, 791 Caley Road, King of Prusia PA 19408, US
(72) FCC, LLC d/b/a First Growth Capital, Mr. Thomas F. Berner, Executive Vice, President & General Counsel, 515 North Flagler Drive, Suite 700, West Palm Beach, FL 33401, US;
Hutchinson, Michael, 791 Caley Road, King of Prusia PA 19408, US
(74) Office Freylinger, P.O. Box 48, 8001 Strassen, LU

(51) (8) **EP 1810008 ***
G 01N 21/75
G 01N 21/76
G 01N 33/53
G 01N 33/532
G 01N 33/573
(23) 18.09.2010.
(30) US 15.10.2004. 619092 P
(86) PCT/US2005037171 17.10.2005.
(96) EP 05815021.0 17.10.2005. En
(87) WO2006044747 27.04.2006. 200617
(97) EP 1810008 25.07.2007. 200730 En
(41) 16.03.2011. 201111
(54) P27 UBIQUITINATION ASSAY AND METHODS OF USE
(71) Signal Pharmaceuticals LLC, 4550 Towne Centre Court, San Diego, CA 92121, US
(72) XU, Shuichan, 12426 Dormouse Road, San Diego, CA 92129, US;
COX, Sarah, 13292 Boomer Court, San Diego, CO 92129, US;
XIE, Weilin, 5375 Ruette de Mar, San Diego, CA 92130, US;
MERCURIO, Frank, M., 12740 Sandy Crest Court, San Diego, CA 92130, US
(74) Jones Day, Rechtsanwälte, Attorneys-at-Law, Patentanwälte, Prinzregentenstrasse 11, 80538 München, DE

(51) (7) **EP 1735612 ***
G 01N 27/72
G 01N 27/82
G 01R 33/12
G 01N 27/87
F 16L 55/26
(23) 01.10.2010.
(30) US 15.04.2004. 825873
(86) PCT/US2005010295 28.03.2005.
(96) EP 05732756.1 28.03.2005. En
(87) WO2005106451 10.11.2005. 200545
(97) EP 1735612 27.12.2006. 200652 En
(41) 23.03.2011. 201112
(54) ID-OD DISCRIMINATION SENSOR CONCEPT FOR A MAGNETIC FLUX LEAKAGE INSPECTION TOOL
(71) TDW DELAWARE, INC., 1100 Market Street, Suite 780, Wilmington, Delaware 19801, US
(72) VEACH, William, D., 1015 Spirit Lane, Cheyenne, WY 82009, US;
LLOYD, Tyler, S., 5043 S. Escondido, Murray, UT 84117, US;
LUDLOW, Jed, C., 43 East 300 North, North Salt Lake, UT 84054, US
(74) Wood, Graham, Bailey Walsh & Co, 5 York Place, Leeds LS1 2SD, GB

(51) (7) **EP 1687625 ***
G 01N 33/38
(23) 24.09.2010.
(30) US 14.11.2003. 519653 P
US 08.03.2004. 793750
(86) PCT/IL2004001028 10.11.2004.
(96) EP 04799337.3 10.11.2004. En
(87) WO2005047891 26.05.2005. 200521

(97) EP 1687625 09.08.2006. 200632 En
(41) 30.03.2011. 201113
(54) METHOD, APPARATUS AND SYSTEM FOR FORECASTING STRENGTH OF CEMENTITIOUS MATERIAL
(71) Concretec Ltd., P.O. Box 53073, 91530 Jerusalem, IL
(72) SHTAKELBERG, David, 13/5 Brandwein Street, 97784 Jerusalem, IL;
WILGE, Boris, 31 Alonim Street, Yishuv Lapid, 73133 Doar Na Merkaz, IL;
BOIKO, Shimon, 13 Mevo Heharuv Street, 90970 Har Adar, IL
(74) Machtalre, Georges, et al, Dennemeyer & Associates S.A., 55, rue des Bruyres, 1274 Howald, LU

(51) (8) **EP 2064547 ***
G 01N 33/53
(23) 22.10.2010.
(30) US 18.09.2006. 845390 P
US 03.11.2006. 856559 P
(86) PCT/US2007020140 17.09.2007.
(96) EP 07838361.9 17.09.2007. En
(87) WO2008036236 27.03.2008. 200813
(97) EP 2064547 03.06.2009. 200923 En
(41) 20.04.2011. 201116
(54) FETUIN-A AS A BIOMARKER FOR MULTIPLE SCLEROSIS
(71) Multiple Sclerosis Research Center Of New York, 521 West 57th Street, 4th Floor, New York, NY 10019, US
(72) SADIQ, Saud, 215 Tomahawk Lane, Franklin Lakes, NJ 07417, US;
DONELAN, Nicola, 41 River Terrace, Apt. 2801, New York, NY 10282, US;
YAN, Qi, Jiang, 75-20 113th Street, Apt. 1a, Forest Hills, NY 11375, US
(74) Thornton, Neil, et al, Reddie & Grose, 16 Theobalds Road, London, WC1X 8PL, GB

(51) (8) **EP 1991871 ***
G 01N 33/543
G 01N 33/566
G 01N 33/68
G 01N 33/577
G 01N 33/574
(23) 17.11.2010.
(30) FI 07.03.2006. 20065152
(86) PCT/FI2007050120 06.03.2007.
(96) EP 07712612.6 06.03.2007. En
(87) WO2007101913 13.09.2007. 200737
(97) EP 1991871 19.11.2008. 200847 En
(41) 04.05.2011. 201118
(54) NOVEL ASSAY FOR THE DETECTION OF AN ANTIBODY BOUND TO A CELL MEMBRANE RECEPTOR
(71) Bayer Schering Pharma Oy, Pansiontie 47, 20210 Turku, FI
(72) PIIRONEN, Timo, Matintie 13, 21350 Ilmarinen, FI
(74) Matilainen, Mirja Helena, et al, Oy Jalo Ant-Wuorinen AB, Iso Roobertinkatu 4-6 A, 00120 Helsinki, FI

(51) (8) **WO 2009076359**
G 01N 33/68
G 01N 33/564
(23) 25.03.2011.
(30) US 11.12.2007. 7276 P
US 13.05.2008. 52949 P
(86) PCT/US2008086075 09.12.2008.
(96) WO 08859105.2 09.12.2008. En
(87) WO2009076359 18.06.2009. 200925
(97) WO 2009076359 18.06.2009. 200925 En
(41) 04.05.2011. 201118
(54) MODULATORS OF NEURONAL REGENERATION
(71) Genentech, Inc., 1 DNA Way, South San Francisco, CA 94080, US
(72) TESSIER-LAVIGNE, Marc, 361 Rideway Road, Woodside, CA 94062, US;
ATWAL, Jasvinder, 1425 Saint Francis Way, San Carlos, CA 94070, US;
PINKSTON, Julie, 2452 San Carlos Avenue, San Carlos, CA 94070, US
(74) Walton, Seán Malcolm, et al, Mewburn Ellis LLP, 33 Gutter Lane, London, EC2V 8AS, GB

(51) (8) **EP 2030025 ***
G 01N 33/74
(23) 29.10.2010.
(30) US 07.06.2006. 811996 P
(86) PCT/US2007013688 07.06.2007.
(96) EP 07809455.4 07.06.2007. En
(87) WO2007146229 21.12.2007. 200751
(97) EP 2030025 04.03.2009. 200910 En
(41) 27.04.2011. 201117
(54) MARKERS ASSOCIATED WITH ARTERIOVASCULAR EVENTS AND METHODS OF USE THEREOF
(71) Tethys Bioscience, Inc., 5858 Horton Street, Suite 550, Emeryville, CA 94608, US
(72) URDEA, Mikey, 100 Bunce Meadow Drive, Alamo, California 94507, US;
MCKENNA, Michael, 280 41st Street, Oakland, California 94611, US;
ARENSDORF, Pat, 3343 Thomas Drive, Palo Alto, California 94303, US
(74) Marshall, Cameron John, et al, Carpmaels & Ransford, One Southampton Row, London, WC1B 5HA, GB

(51) (8) **EP 2145196 ***
G 01R 31/3187
(23) 05.10.2010.
(30) EP 02.05.2007. 07107300
(86) PCT/IB2008051679 30.04.2008.
(96) EP 08738041.6 30.04.2008. En
(87) WO2008135917 13.11.2008. 200846
(97) EP 2145196 20.01.2010. 201003 En
(41) 23.03.2011. 201112
(54) IC TESTING METHODS AND APPARATUS
(71) NXP B.V., High Tech Campus 60, 5656 AG Eindhoven, NL
(72) ZJAJO, Amir, c/o NXP Semiconductors, IP Department, Cross Oak Lane, Redhill Surrey RH1 5HA, GB;
BARRAGAN ASIAN, Manuel Jose, c/o NXP Semiconductors, IP Department, Cross Oak Lane, Redhill Surrey RH1 5HA, GB;

PINEDA DE GYVEZ, Jose de Jesus, c/o NXP Semiconductors, IP Department, Cross Oak Lane, Redhill Surrey RH1 5HA, GB
(74) Williamson, Paul Lewis, NXP Semiconductors UK Ltd., Intellectual Property Department, Betchworth House, 57-65 Station Road, Redhill, Surrey RH1 1DL, GB

(51) (8) **EP 2103956**
G 01S 11/10
H 04M 1/725
(23) 25.11.2010.
(30) US 18.03.2008. 50351
(96) EP 08153671.6 28.03.2008. En
(97) EP 2103956 23.09.2009. 200939 En
(41) 20.04.2011. 201116
(54) Estimation of the speed of a mobile device
(71) RESEARCH IN MOTION LIMITED, 295 Phillip Street, Waterloo, Ontario N2L 3W8, CA
(72) Dietz, David Blaine, 450 Cabot Trail, Waterloo Ontario N2K 4C8, CA;
Sangary, Nagula Tharma, 520 Buckingham Blvd., Waterloo Ontario N2T 2T9, CA;
Simmons, Sean Bartholomew, 120 Sandford Fleming Drive, Waterloo Ontario N2T 1E7, CA
(74) Howson, Richard G.B., et al, Kilburn & Strode LLP, 20 Red Lion Street, London WC1R 4PJ, GB

(51) (8) **EP 1852729**
G 02C 11/00
(23) 27.10.2010.
(30) IT 05.05.2006. mi20060890
(96) EP 07008539.4 26.04.2007. It
(97) EP 1852729 07.11.2007. 200745 En
(41) 20.04.2011. 201116
(54) Anti-theft device for eyeglasses
(71) PLASTI-MAX SpA, Via G. Micca 68, 24064 Grumello Del Monte BG, IT
(72) Mazzucchelli, Corrado, c/o Plasti-Max S.p.A., Via G. Micca, 68, 24064 Grumello Del Monte (BG), IT
(74) Trupiano, Federica, et al, Marietti, Gislon e Trupiano S.r.l., Via Larga, 16, 20122 Milano, IT

(51) (8) **EP 1854062** *
G 05B 9/02
G 06F 15/16
H 04M 3/487
(23) 01.09.2010.
(30) US 09.02.2005. 651603 P
US 10.02.2005. 652161 P
US 18.05.2005. 132840
(86) PCT/US2006003789 02.02.2006.
(96) EP 06734257.6 02.02.2006. En
(87) WO2006086219 17.08.2006. 200633
(97) EP 1854062 14.11.2007. 200746 En
(41) 13.04.2011. 201115
(54) SYSTEM FOR DYNAMIC AD SELECTION AND PLACEMENT WITHIN A VOICE APPLICATION ACCESSED THROUGH AN ELECTRONIC INFORMATION PAGE
(71) Apptera, Inc., 1150 Bayhill Drive, Suite 203, San Bruno, CA 94066, US
(72) CHIU, Leo, 2325 Bourbon Court, South San Francisco, California 94080, US;
LOUKIANOFF, Peter, 12 Hillwood Place, Oakland, California 94610, US
(74) Wörz, Volker Alfred, Dreiss Patentanwälte, Postfach 10 37 62, 70032 Stuttgart, DE

(51) (8) **EP 1857912**
G 06F 3/00
(23) 06.10.2010.
(96) EP 06114020.8 16.05.2006. En
(97) EP 1857912 21.11.2007. 200747 En
(41) 30.03.2011. 201113
(54) Tactile feedback system and method for a mobile communication device having a trackball
(71) RESEARCH IN MOTION LIMITED, 295 Phillip Street, Waterloo, Ontario N2L 3W8, CA
(72) Munroe, LeSalle, 295 Dale Crescent, Apt. 802, Waterloo, Ontario, N2J 3Y5, CA;
Lowles, Robert, 393 Gatestone Boulevard, Waterloo, Ontario, N2T 2J5, CA;
Mankaruse, George, 43 Tottenham Street, Kitchener, Ontario, N2R 1V8, CA;
Hui, Edward, 8249 Miller's Grove, Mississauga, Ontario, L5N 3C6, CA
(74) Howson, Richard G.B., et al, Kilburn & Strode LLP, 20 Red Lion Street, London WC1R 4PJ, GB

(51) (8) **EP 2085861**
G 06F 3/044
(23) 16.11.2010.
(96) EP 08150810.3 29.01.2008. En
(97) EP 2085861 05.08.2009. 200932 En
(41) 04.05.2011. 201118
(54) Electronic device and touch screen display
(71) RESEARCH IN MOTION LIMITED, 295 Phillip Street, Waterloo, Ontario N2L 3W8, CA
(72) Ma, ZhongMing, 287 Magnolia Place, Waterloo Ontario N2V 2A3, CA
(74) MERH-IP, Matias Erny Reichl Hoffmann, Paul-Heyse-Strasse 29, 80336 München, DE

(51) (8) **EP 2133781**
G 06F 3/048
(23) 07.10.2010.
(96) EP 08157899.9 09.06.2008. En
(97) EP 2133781 16.12.2009. 200951 En
(41) 13.04.2011. 201115
(54) System and method for providing tactile feedback to a user of an electronic device
(71) RESEARCH IN MOTION LIMITED, 295 Phillip Street, Waterloo, Ontario N2L 3W8, CA
(72) Griffin, Jason, 14 Deer Ridge Crescent, Kitchener Ontario N2P 2L3, CA;
Fyke, Steven Henry, 3 Father David Bauer DR., Unit 401, Waterloo, Ontario N2L 6M1, CA;
Orr, Kevin, 56 Snyder Avenue North, Elmira, Ontario N3B 3C9, CA
(74) Fennell, Gareth Charles, Kilburn & Strode LLP, 20 Red Lion Street, London WC1R 4PJ, GB

(51) (7) **EP 1774430** *
G 06F 9/44
G 06F 3/14
H 04Q 7/32
(23) 01.12.2010.
(30) US 18.06.2004. 581287 P
(86) PCT/CA2005000940 17.06.2005.
(96) EP 05759152.1 17.06.2005. En
(87) WO2005124532 29.12.2005. 200552
(97) EP 1774430 18.04.2007. 200716 En
(41) 04.05.2011. 201118
(54) USER INTERFACE GENERATION WITH PARAMETRIC IMAGE DIVISION
(71) RESEARCH IN MOTION LIMITED, 295 Phillip Street, Waterloo, Ontario N2L 3W8, CA
(72) KLASSEN, Gerhard, D., 510 Heatherhill Place, Waterloo, Ontario N2T 1H7, CA;
BELLS, Matthew, 5 Father David Bauer Drive, Suite 409, Waterloo, Ontario N2L 6M2, CA
(74) MERH-IP, Matias Erny Reichl Hoffmann, Paul-Heyse-Strasse 29, 80336 München, DE

(51) (8) **EP 1872207** *
G 06F 9/44
G 06F 15/02
H 04Q 7/32
(23) 15.11.2010.
(30) US 18.04.2005. 672032 P
(86) PCT/CA2006000578 18.04.2006.
(96) EP 06721824.8 18.04.2006. En
(87) WO2006110999 26.10.2006. 200643
(97) EP 1872207 02.01.2008. 200801 En
(41) 27.04.2011. 201117
(54) SYSTEM AND METHOD OF PRESENTING ENTITIES OF STANDARD DEVICE APPLICATIONS IN WIRELESS DEVICES
(71) RESEARCH IN MOTION LIMITED, 295 Phillip Street, Waterloo, Ontario N2L 3W8, CA
(72) QING, Richard, 26C Castlebrook Lane, Ottawa, Ontario K2G 5G6, CA;
WALLIS, Kenneth, 1346 Langdale Crescent, Oakville, Ontario L6H 2K8, CA;
BIBR, Viera, 6479 McNiven Road, Box 828, Kilbride, Ontario L0P 1G0, CA;
BATEMAN, Cameron, 3392 Regal Road, Burlington, ON, L7N 1L8, CA;
SHENFIELD, Michael, 38 Stockdale Crescent, Richmond Hill, Ontario L4C 3S9, CA;
VITANOV, Kamen, 5530 Glen Erin DR. Unit 30, Mississauga, Ontario L5M 6E8, CA
(74) Patel, Binesh, Barker Brettell LLP, 10-12 Priests Bridge, London, SW15 5JE, GB

(51) (8) **EP 1978441**
G 06F 9/44
(23) 28.10.2010.
(30) CA 16.10.2006. 2564054
(96) EP 07118618.3 16.10.2007. En
(97) EP 1978441 08.10.2008. 200841 En
(41) 06.04.2011. 201114
(54) System and method for updating reference to a data-source in a component-based application
(71) RESEARCH IN MOTION LIMITED, 295 Phillip Street, Waterloo, Ontario N2L 3W8, CA
(72) Cacenco, Michael, 211 Kingknoll Drive, Brampton Ontario L6Y 4X4, CA;
Goring, Bryan, 1542 Morse Place, Milton Ontario L9T 5V4, CA;
Kozlov, Igor, 2079 The Collegeway, Unit 60, Mississauga Ontario L5L 3M1, CA
(74) Patel, Binesh, Barker Brettell LLP, 10-12 Priests Bridge, London, SW15 5JE, GB

(51) (8) **EP 1990715**
G 06F 9/44
(23) 27.11.2010.
(30) US 07.05.2007. 916402 P
(96) EP 08155769.6 07.05.2008. En
(97) EP 1990715 12.11.2008. 200846 En
(41) 06.04.2011. 201114
(54) System, apparatus and method for programming a computing device
(71) Research In Motion Limited, 295 Phillip Street, Waterloo, ON N2L 3W8, CA
(72) Neil, Tim, 5807 Raftsman Cove, Mississauga Ontario L5M 7H2, CA;
Grenier, Steve, 43 Standish Street, Georgetown Ontario L7G 5V7, CA
(74) MERH-IP, Matias Erny Reichl Hoffmann, Paul-Heyse-Strasse 29, 80336 München, DE

(51) (8) **EP 1846828** *
G 06F 12/02
(23) 05.10.2010.
(30) EP 31.01.2005. 05100602
(86) PCT/IB2006050279 26.01.2006.
(96) EP 06710752.4 26.01.2006. En
(87) WO2006079986 03.08.2006. 200631
(97) EP 1846828 24.10.2007. 200743 En
(41) 30.03.2011. 201113
(54) DATA PROCESSING SYSTEM AND METHOD FOR MEMORY DEFRAGMENTATION
(71) NXP B.V., High Tech Campus 60, 5656 AG Eindhoven, NL
(72) BEKOOIJ, Marco, J., G., C/o PROF. Holstlaan 6, NL-5656 AA Eindhoven, NL
(74) Schouten, Marcus Maria, et al, NXP B.V., IP & L Department, High Tech Campus 32, 5656 AE Eindhoven, NL

(51) (8) **EP 1872254** *
G 06F 17/00
H 04Q 7/22
H 04B 7/26
G 06F 9/44
G 06F 9/455
(23) 16.11.2010.
(30) US 18.04.2005. 672077 P
(86) PCT/CA2006000186 09.02.2006.
(96) EP 06705142.5 09.02.2006. En
(87) WO2006110986 26.10.2006. 200643
(97) EP 1872254 02.01.2008. 200801 En
(41) 04.05.2011. 201118
(54) SYSTEM AND METHOD OF REPRESENTING DATA ENTITIES OF STANDARD DEVICE APPLICATIONS AS BUILT-IN COMPONENTS

(71) RESEARCH IN MOTION LIMITED, 295 Phillip Street, Waterloo, Ontario N2L 3W8, CA
(72) SHENFIELD, Michael, 38 Stockdale Crescent, Richmond Hill, Ontario L4C 3S9, CA;
QING, Richard, 26C Castlebrook Lane, Ottawa, Ontario K2G 5G6, CA;
WALLIS, Ken, 1346 Langdale Crescent, Oakville, Ontario L6H 2K8, CA;
BIBR, Viera, 6479 McNiven Road Box 828 Kilbride, Ontario, L0P 1G0, CA;
BATEMAN, Cameron, 1 St. Frances Place Apt., 3702, San Francisco, CA 94107, US;
VITANOV, Kamen, 5530 Glen Erin Drive Unit 30, Mississauga, Ontario L5M 6E8, CA
(74) Patel, Binesh, Barker Brettell LLP, 10-12 Priests Bridge, London, SW15 5JE, GB

(51) (8) **EP 1999634** *
G 06F 17/00
(23) 01.10.2010.
(30) US 03.03.2006. 778666 P
(86) PCT/US2007005652 05.03.2007.
(96) EP 07752362.9 05.03.2007. En
(87) WO2007103352 13.09.2007. 200737
(97) EP 1999634 10.12.2008. 200850 En
(41) 27.04.2011. 201117
(54) SYSTEMS AND METHODS FOR DOCUMENT ANNOTATION
(71) Live Cargo, Inc., 6520 Bryan Boulevard, Suite 102, Greensboro, NC 27409, US
(72) REDDEL, V, Frederick, A., 5602 Hedgeshire Court, Greensboro, North Carolina 27407, US;
YOUNG, W., Douglas, 7422 Strader Road, Summerfield, North Carolina 27358, US;
PICKRELL, Aaron, K., 4413 Harvard Avenue, Greensboro, North Carolina 27407, US
(74) Weston, Robert Dale, et al, Phillips & Leigh, 5 Pemberton Row, London EC4A 3BA, GB

(51) (8) **EP 2096562**
G 06F 17/30
(23) 18.11.2010.
(96) EP 08152120.5 29.02.2008. En
(97) EP 2096562 02.09.2009. 200936 En
(41) 13.04.2011. 201115
(54) Enhanced browser navigation
(71) RESEARCH IN MOTION LIMITED, 295 Phillip Street, Waterloo, Ontario N2L 3W8, CA
(72) Adams, Neil, 550 Little Dover Crescent, Waterloo Ontario N2K 4E4, CA
(74) Patel, Binesh, Barker Brettell LLP, 10-12 Priests Bridge, London, SW15 5JE, GB

(51) (7) **EP 1745391** *
G 06F 19/00
G 06F 17/00
G 01N 33/48
A 61B 5/00
(23) 04.05.2010.
(30) US 07.04.2004. 560115 P
US 13.07.2004. 891256
(86) PCT/US2005011691 06.04.2005.
(96) EP 05734991.2 06.04.2005. En
(87) WO2005101230 27.10.2005. 200543
(97) EP 1745391 24.01.2007. 200704 En
(41) 27.04.2011. 201117
(54) SYTEMS AND METHODS FOR IMPROVING LIVESTOCK PRODUCTION
(71) Merial Ltd., 3239 Satellite Blvd., Duluth, GA 30096, US
(72) BAUCK, Stewart, William, 3430 Silver Lake Drive, Cumming, GA 30041, US;
HUTTON, Michael Edward Hay, 232 Boulevard Georges-Vanier, 201/202, Montreal, H3J 2Y8, CA;
JOHNSON, John, 440 Cullingworth Drive, Alpharetta, GA 30022, US;
MARSTON, Eric, Lloyd, 1626 Belle Isle Circle, Atlanta, GA 30329, US;
GOODALL, Rodney, 5509 Kingsley Manor, Cumming, GA 30041, US
(74) Harding, Charles Thomas, D Young & Co LLP, 120 Holborn, London, EC1N 2DY, GB

(51) (8) **EP 2100246** *
G 06F 19/00
(23) 30.09.2010.
(30) US 17.11.2006. 859584 P
(86) PCT/US2007023934 14.11.2007.
(96) EP 07867445.4 14.11.2007. En
(87) WO2008060566 22.05.2008. 200821
(97) EP 2100246 16.09.2009. 200938 En
(41) 23.03.2011. 201112
(54) BIOMETRIC ANALYSIS OF POPULATIONS DEFINED BY HOMOZYGOUS MARKER TRACK LENGTH
(71) Motif Biosciences, Inc., 330 Madison Avenue, 31st Floor, New York, NY 10017, US
(72) STEPHENS, Joel C., 46 Crabapple Lane, Guilford, CT 06437, US;
FLICEK, Joseph R., One West 67th Street, Apt. 411, New York, NY 10023, US;
VAN DER WALT, Joelle Marie, 7 Disalaan, 6674 Stilbaai, ZA
(74) Weber, Martin, Jones Day, Rechtsanwälte Attorneys-at-Law Patentanwälte, Prinzregentenstrasse 11, 80538 München, DE

(51) (7) **EP 1728189** *
G 06K 5/00
(23) 01.10.2010.
(30) US 26.03.2004. 556589 P
(86) PCT/US2005010252 28.03.2005.
(96) EP 05730377.8 28.03.2005. En
(87) WO2005098736 20.10.2005. 200542
(97) EP 1728189 06.12.2006. 200649 En
(41) 30.03.2011. 201113
(54) SYSTEM AND METHOD FOR CONTROLLING ACCESS AND USE OF PATIENT MEDICAL DATA RECORDS
(71) Convergence Ct, 700 Richards Street, Suite 709, Honolulu, HI 96813, US
(72) ONUMA, Lambert, P., 26 Puuikena Place, Honolulu, HI 96821, US;
ITO, Alan, S., 2703 Lowrey Avenue, Honolulu, HI 96822, US;
MOSSMAN, Bradley, J., 1132 Bishop Street, Suite 2302, Honolulu, HI 96813, US;
ALBERTSON, Robert, R., 641 Crystal Court, Pleasanton, CA 94566, US;

PAI HILTON, Shirley, S., S., 632 Moaniala Street, Honolulu, HI 96821, US
(74) Grünecker, Kinkeldey, Stockmair & Schwanhäusser, Anwaltssozietät, Leopoldstrasse 4, 80802 München, DE

(51) (8) **EP 1797438 ***
G 06K 11/00
G 01R 17/10
G 01R 33/09
G 01D 5/16
G 06F 3/033
(23) 21.10.2010.
(30) EP 27.09.2004. 04104681
EP 22.03.2005. 05102254
(86) PCT/IB2005053072 19.09.2005.
(96) EP 05783549.8 19.09.2005. En
(87) WO2006035350 06.04.2006. 200614
(97) EP 1797438 20.06.2007. 200725 En
(41) 13.04.2011. 201115
(54) SENSOR
(71) NXP B.V., High Tech Campus 60, 5656 AG Eindhoven, NL
(72) VAN ZON, Hans, c/o PROF. Holstlaan 6, NL-5656 AA Eindhoven, NL
(74) Schouten, Marcus Maria, et al, NXP B.V., IP & L Department, High Tech Campus 32, 5656 AE Eindhoven, NL

(51) (8) **EP 1848549 ***
G 06Q 20/00
(23) 30.06.2010.
(30) US 11.02.2005. 652158 P
US 29.04.2005. 676349 P
US 29.04.2005. 676529 P
(86) PCT/US2006004918 13.02.2006.
(96) EP 06734865.6 13.02.2006. En
(87) WO2006086726 17.08.2006. 200633
(97) EP 1848549 31.10.2007. 200744 En
(41) 06.04.2011. 201114
(54) METHOD AND DEVICE FOR DISPENSING AND PURCHASING CUSTOMIZED GIFT CARDS
(71) Loyalty Acquisition Sub, LLC, 1900 Frost Road, Suite 100, Bristol, Pennsylvania 19007, US
(72) GRIDER, Jeffrey, S., 15 Cobblestone Lane, Annandale, New Jersey 08801, US
(74) McBride, Peter Hill, Murgitroyd & Company, Scotland House, 165-169 Scotland Street, Glasgow, G5 8PL, GB

(51) (8) **EP 1844433 ***
G 06Q 40/00
(23) 06.07.2010.
(30) ZA 27.01.2005. 200500820
(86) PCT/IB2005003178 25.10.2005.
(96) EP 05797357.0 25.10.2005. En
(87) WO2006079878 03.08.2006. 200631
(97) EP 1844433 17.10.2007. 200742 En
(41) 06.04.2011. 201114
(54) INVOICE FINANCING
(71) Validation Clearing Bureau (proprietary) limited, 33 Churchill Road, Stamfordhill, Durban 4001, ZA
(72) KERDACHI, Neville Winston Joseph, Apartment 1, Hertford, 747 Musgrave Road, Morningside, Durban 4001, ZA
(74) Grünecker, Kinkeldey, Stockmair & Schwanhäusser, Anwaltssozietät, Leopoldstrasse 4, 80802 München, DE

(51) (8) **EP 1839259 ***
G 06Q 99/00
H 04K 1/00
H 04L 9/00
(23) 05.10.2010.
(30) US 30.12.2004. 27574
US 02.04.2005. 667789 P
US 02.04.2005. 667883 P
(86) PCT/US2005039130 31.10.2005.
(96) EP 05825134.9 31.10.2005. En
(87) WO2006073543 13.07.2006. 200628
(97) EP 1839259 03.10.2007. 200740 En
(41) 23.03.2011. 201112
(54) A SYSTEM AND METHOD OF PROCESSING ENTITLEMENT RULES, OFFERING AND DELIVERING DIGITAL CONTENT
(71) Grab Networks, Inc., 21000 Atlantic Boulevard 6th Floor, Dulles, VA 20166, US
(72) RUSSEL, Zack, 114 East 13th Street, Apt.6B, New York, NY 10003, US;
SALZINGER, Steve, 50 Greendale Road, Scarsdale, NY 10583, US;
MANU, Dennis, 36 Longview Road, Tewksbury Township, NJ 08833, US;
YUSUF, Ubah, 2600 Netherland Avenue, Apt. 1202, Riverdale, NY 10463, US;
SHERWIN, Jeffrey, 293 Wythe Avenue, Apt. 2, Brooklyn, NY 11211, US;
TOYOHARA, Takeshi, 445 E 68th St., APT 9F, New York, NY 10065-6332, US;
STANLEY, Mike, 77 East Andrews DR. NW Apt. 130, Atlanta, GA 30305, US;
NARRELL, Matthew, 61 Lexington Ave. Apt. 5a, New York, NY 10010, US
(74) Siniscalco, Fabio, et al, Jacobacci & Partners S.p.A., Via Senato 8, 20121 Milano, IT

(51) (8) **EP 1866898 ***
G 09F 15/00
(23) 01.10.2010.
(30) DK 08.03.2005. 200500342
(86) PCT/IB2006050713 08.03.2006.
(96) EP 06711040.3 08.03.2006. En
(87) WO2006095312 14.09.2006. 200637
(97) EP 1866898 19.12.2007. 200751 En
(41) 30.03.2011. 201113
(54) A COUNTER
(71) Tech View A/S, Toldbodgade 51C, 3, 1252 Copenhagen K, DK
(72) THOSTRUP, Christian, Nyhavn 43A, DK-1051 Copenhagen K, DK
(74) Holme Patent A/S, Vesterbrogade 20, 1620 Copenhagen V, DK

(51) (8) **EP 1889253 ***
G 10L 15/18
G 10L 15/26
H 04M 3/51
(23) 21.10.2010.
(30) US 18.05.2005. 131486
(86) PCT/US2006018994 17.05.2006.
(96) EP 06759969.6 17.05.2006. En

(87) WO2006124942 23.11.2006. 200647
(97) EP 1889253 20.02.2008. 200808 En
(41) 20.04.2011. 201116
(54) A METHOD AND SYSTEM FOR ANALYZING SEPARATED VOICE DATA OF A TELEPHONIC COMMUNICATION BETWEEN A CUSTOMER AND A CONTACT CENTER BY APPLYING A PSYCHOLOGICAL BEHAVIORAL MODEL THERETO
(71) Eloyalty Corporation, 150 Field Drive - Suite 250, Lake Forest, IL 60045, US
(72) DANSON, Christopher, 6801 Bright Star Lane, Austin, TX 78736, US;
CONWAY, Kelly, 115 Moffett Road, Lake Bluff, Illinois 60044, US;
CAPERS, Keene, Hedges, 246 Gravilla Street, La Jolla, CA 92037, US;
BROWN, Douglas, 1616 Westlake Drive, Austin, TX 78746, US;
GUSTAFSON, David, 135 North Avenue, Lake Forest, IL 60045, US
(74) Moore, Barry, et al, Hanna Moore & Curley, 13 Lower Lad Lane, Dublin 2, IE

(51) (8) **EP 2024978 ***
G 11C 16/04
G 11C 16/10
(23) 07.10.2010.
(30) EP 19.05.2006. 06114257
(86) PCT/IB2007051873 16.05.2007.
(96) EP 07735937.0 16.05.2007. En
(87) WO2007135632 29.11.2007. 200748
(97) EP 2024978 18.02.2009. 200908 En
(41) 30.03.2011. 201113
(54) SONOS MEMORY DEVICE AND METHOD OF OPERATING A SONOS MEMORY DEVICE
(71) NXP B.V., High Tech Campus 60, 5656 AG Eindhoven, NL
(72) VAN DUUREN, Michiel, J., c/o NXP Semiconductors, IP Department, HTC 60 1.31 Prof Holstlaan 4, 5656 AG Eindhoven, NL;
VAN SCHAIJK, Robertus, T., F., c/o NXP Semiconductors, IP Department, HTC 60 1.31 Prof Holstlaan 4, 5656 AG Eindhoven, NL;
AKIL, Nader, c/o NXP Semiconductors, IP Department, HTC 60 1.31 Prof Holstlaan 4, 5656 AG Eindhoven, NL
(74) Schouten, Marcus Maria, et al, NXP B.V., IP & L Department, High Tech Campus 32, 5656 AE Eindhoven, NL

(51) (8) **EP 1972005 ***
H 01L 21/336
(23) 06.10.2010.
(30) EP 05.01.2006. 06100109
(86) PCT/IB2007050022 04.01.2007.
(96) EP 07700040.4 04.01.2007. En
(87) WO2007077540 12.07.2007. 200728
(97) EP 1972005 24.09.2008. 200839 En
(41) 30.03.2011. 201113
(54) METHOD OF MANUFACTURING A SEMICONDUCTOR DEVICE AND SEMICONDUCTOR DEVICE OBTAINED WITH SUCH A METHOD
(71) NXP B.V., High Tech Campus 60, 5656 AG Eindhoven, NL
(72) NUTTINCK, Sebastien, c/o NXP Semiconductors, IP Department, HTC 60 1.31 Prof Holstlaan 4, NL-5656 AG Eindhoven, NL;
CURATOLA, Gilberto, c/o NXP Semiconductors, IP Department, HTC 60 1.31 Prof Holstlaan 4, NL-5656 AG Eindhoven, NL;
HIJZEN, Erwin, c/o NXP Semiconductors, IP Department, HTC 60 1.31 Prof Holstlaan 4, NL-5656 AG Eindhoven, NL;
MEUNIER-BEILLARD, Philippe, c/o NXP Semiconductors, IP Department, Cross Oak Lane, Redhill Surrey RH1 5HA, GB
(74) Schouten, Marcus Maria, et al, NXP B.V., IP & L Department, High Tech Campus 32, 5656 AE Eindhoven, NL

(51) (7) **EP 1741134 ***
H 01L 23/02
(23) 03.11.2009.
(30) US 30.04.2004. 836855
(86) PCT/US2005013336 19.04.2005.
(96) EP 05737564.4 19.04.2005. En
(87) WO2005112100 24.11.2005. 200547
(97) EP 1741134 10.01.2007. 200702 En
(41) 23.03.2011. 201112
(54) STACKED MODULE SYSTEMS AND METHODS
(71) Staktek Group, L.P., 8900 Shoal Creek Blvd., Suite 125, Austin, TX 78758, US
(72) PARTRIDGE, Julian, 9613 Vista View Drive, Austin, TX 78750, US;
WEHRLY, JR., Douglas, 8700 Melshire Drive, Austin, TX 78757, US
(74) Turnbull, Alexander James, et al, HLBBshaw, Merlin House, Falconry Court, Baker's Lane, Epping, Essex CM16 5DQ, GB

(51) (8) **EP 2038927 ***
H 01L 23/528
(23) 23.09.2010.
(30) EP 30.06.2006. 06116377
(86) PCT/IB2007052354 19.06.2007.
(96) EP 07789732.0 19.06.2007. En
(87) WO2008004151 10.01.2008. 200802
(97) EP 2038927 25.03.2009. 200913 En
(41) 23.03.2011. 201112
(54) POWER SUPPLY NETWORK
(71) NXP B.V., High Tech Campus 60, 5656 AG Eindhoven, NL
(72) VAN DE WIEL, Petrus J.A.M., NXP Semiconductors, IP Department, HTC 60 1.31 Prof Holstlaan 4, 5656 AG Eindhoven, NL;
APPLEBY, Andrew T., NXP Semiconductors, IP Department, HTC 60 1.31 Prof Holstlaan 4, 5656 AG Eindhoven, NL
(74) Schouten, Marcus Maria, et al, NXP B.V., IP & L Department, High Tech Campus 32, 5656 AE Eindhoven, NL

(51) (8) **EP 1701411**
H 01R 13/658
H 01R 9/24
(23) 08.02.2011.
(30) DE 09.03.2005. 102005012369
(96) EP 06004086.2 01.03.2006. De
(97) EP 1701411 13.09.2006. 200637 De
(41) 16.03.2011. 201111
(54) Connection box for data network
(71) ADC GmbH, Beeskowdamm 3-11, 14167 Berlin, DE

(72) Hetzer, Ulrich, Mendelssohnstr. 32, 15831 Mahlow, DE;
Mössner, Frank, Welterpfad 56, 12277 Berlin, DE;
Zimmer, Sabine, Selchowstrasse 8 b, 12489 Berlin, DE;
Nad, Ferenc, Rüdesheimer Strasse 25, 14197 Berlin, DE

(51) (8) **EP 1938439** *
H 02J 7/35
H 02J 7/34
G 05F 1/67
(23) 18.11.2010.
(30) FR 20.09.2005. 0509606
(86) PCT/EP2006009088 19.09.2006.
(96) EP 06792135.3 19.09.2006. En
(87) WO2007039091 12.04.2007. 200715
(97) EP 1938439 02.07.2008. 200827 En
(41) 04.05.2011. 201118
(54) METHOD AND APPARATUS FOR CHARGING A BATTERY FROM A COMPLEX DIRECT CURRENT SOURCE
(71) Marty, Marguerite Annie, 2 Allée Galilée, 91400 Orsay, FR;
Cour, Sophie, 25 A Rue Alphonse Pécard, 91190 Gif-sur-Yvette, FR;
Cour, Esther, 2 Allée des Lavandes, 91940 Les Ulis, FR;
Cour, Edouard, 2 Allée Galilée, 91400 Orsay, FR
(72) COUR, Jean- Michel, -, deceased, FR
(74) Pontet, Bernard, Pontet Allano & Associés s.e.l.a.r.l., 25, Rue Jean Rostand, Parc Club Orsay Université, 91893 Orsay Cedex, FR

(51) (8) **EP 2064803** *
H 02K 21/24
(23) 08.10.2010.
(30) IE 11.09.2006. 20060667
(86) PCT/IE2007000079 30.08.2007.
(96) EP 07805469.9 30.08.2007. En
(87) WO2008032298 20.03.2008. 200812
(97) EP 2064803 03.06.2009. 200923 En
(41) 30.03.2011. 201113
(54) AN ALTERNATOR
(71) Wind Concepts Limited, Carralena, Ballindine, County Mayo, IE
(72) JEFFERSON, John Leslie, Carralena, Ballindine, County Mayo, IE
(74) Ryan, John Mary, et al, c/o Anne Ryan & Co., 60 Northumberland Road, Ballsbridge, Dublin 4, IE

(51) (8) **EP 1696572**
H 03M 7/02
H 03M 7/14
(23) 21.02.2011.
(96) EP 05101486.8 25.02.2005. En
(97) EP 1696572 30.08.2006. 200635 En
(41) 27.04.2011. 201117
(54) Method and apparatus for data encoding
(71) RESEARCH IN MOTION LIMITED, 295 Phillip Street, Waterloo, Ontario N2L 3W8, CA
(72) Luo, Zhong Hai (Jack), 20 Sam Frustaglio Drive, Toronto,Ontario. M9N 3Y5, CA
(74) MERH-IP, Matias Erny Reichl Hoffmann, Paul-Heyse-Strasse 29, 80336 München, DE

(51) (8) **EP 1900105** *
H 03M 13/11
(23) 03.11.2010.
(30) US 15.04.2005. 671942 P
(86) PCT/US2006014166 14.04.2006.
(96) EP 06750253.4 14.04.2006. En
(87) WO2006113486 26.10.2006. 200643
(97) EP 1900105 19.03.2008. 200812 En
(41) 04.05.2011. 201118
(54) CLASH-FREE IRREGULAR-REPEAT-ACCUMULATE CODE
(71) TRELLISWARE TECHNOLOGIES, INC., 16516 Via Esprillo, Suite 300, San Diego, CA 92127-1708, US
(72) GRAY, Paul, Kingsley, 11826 Paseo Lucido 2022, San Diego, California 92128, US;
CHUGG, Keith, Michael, 5620 Palm Drive, La Canada, California 91011, US
(74) Clark, Jane Anne, Mathys & Squire LLP, 120 Holborn, London EC1N 2SQ, GB

(51) (8) **EP 1986355**
H 04B 10/20
(23) 03.11.2010.
(96) EP 07300984.7 25.04.2007. En
(97) EP 1986355 29.10.2008. 200844 En
(41) 04.05.2011. 201118
(54) Method for maintaining the compatibility of legacy receivers, optical distributing network structure and parts thereof including a method for using such a part
(71) Alcatel Lucent, 54, rue La Boétie, 75008 Paris, FR
(72) Krimmel, Heinz-Georg, Hoffmannstraße 28, 70825 Korntal-Münchingen, DE;
Pfeiffer, Thomas, DR., Ruggerstraße 4, 70569 Stuttgart, DE;
Jentsch, Lothar, Posentsche Straße 3, 15370 Fredersdorf, DE
(74) Brose, Gerhard, Alcatel Lucent, Intellectual Property & Standards, 70430 Stuttgart, DE

(51) (8) **EP 1834437** *
H 04K 1/00
H 04L 9/08
H 04L 9/00
G 06F 21/00
H 04N 7/24
H 04N 7/167
(23) 28.09.2010.
(30) US 30.12.2004. 27830
(86) PCT/US2005041756 17.11.2005.
(96) EP 05858330.3 17.11.2005. En
(87) WO2007001462 04.01.2007. 200701
(97) EP 1834437 19.09.2007. 200738 En
(41) 30.03.2011. 201113
(54) METHOD AND APPARATUS FOR PROVIDING A SECURE MOVE OF A DECRYPTION CONTENT KEY
(71) GENERAL INSTRUMENT CORPORATION, 101 Tournament Drive, Horsham, PA 19044, US
(72) SPRUNK, Eric, J., 7309 Bolero Street, Carlsbad, CA 92009, US;
MEDVINSKY, Alexander, 8873 Hampe Court, San Diego, CA 92129, US
(74) Openshaw, Paul Malcolm, Openshaw & Co., 8 Castle Street, Farnham, Surrey GU9 7HR, GB

(51) (8) **EP 1989816** *
H 04L 9/00
H 04L 12/54
(23) 03.12.2010.
(30) US 12.10.2006. 548719
(86) PCT/CA2007001815 11.10.2007.
(96) EP 07815966.2 11.10.2007. En
(87) WO2008043179 17.04.2008. 200816
(97) EP 1989816 12.11.2008. 200846 En
(41) 13.04.2011. 201115
(54) METHOD AND SYSTEM FOR DETECTING UNDESIRED EMAIL CONTAINING IMAGE-BASED MESSAGES
(71) WatchGuard Technologies, Inc., 505 Fifth Avenue South, Suite 500, Seattle, WA 98014, US
(72) GAMMAGE, Simon David Hedley, 55 Elm Drive West, 2008, Mississauga, Ontario L5B 3Z3, CA;
OSBORNE, Robert Anthony, 100 Overbrook Place, Toronto, Ontario M3H 4P6, CA;
WALKER, Bruce Murray, 1846 Stonepath Crescent, Mississauga, Ontario L4X 1X9, CA
(74) Grünecker, Kinkeldey, Stockmair & Schwanhäusser, Anwaltssozietät, Leopoldstrasse 4, 80802 München, DE

(51) (8) **EP 2027677** *
H 04L 12/24
(23) 09.11.2010.
(30) US 07.12.2005. 295591
(86) PCT/CA2006001989 07.12.2006.
(96) EP 06828152.6 07.12.2006. En
(87) WO2007065260 14.06.2007. 200724
(97) EP 2027677 25.02.2009. 200909 En
(41) 04.05.2011. 201118
(54) EMAIL SERVER SYSTEM AND METHOD
(71) WatchGuard Technologies, Inc., 505 Fifth Avenue South, Suite 500, Seattle, WA 98014, US
(72) WALKER, Bruce, Murray, 1846 Stonepath Crescent, Mississauga, Ontario L4X 1X9, CA
(74) Knauer, Reinhard, Grünecker Kinkeldey, Stockmair & Schwanhäusser, Anwaltssozietät, Leopoldstrasse 4, 80802 München, DE

(51) (7) **EP 1703680**
H 04L 12/56
(23) 15.02.2011.
(30) JP 07.01.2004. 2004002473
(86) PCT/JP2005000140 07.01.2005.
(96) EP 05709230.6 07.01.2005. Ja
(87) WO2005067228 21.07.2005. 200529
(97) EP 1703680 20.09.2006. 200638 En
(41) 30.03.2011. 201113
(54) COMMUNICATION SYSTEM, MOBILE TERMINAL AND ACCESS ROUTER
(71) Panasonic Corporation, 1006, Oaza Kadoma, Kadoma-shi, Osaka 571-8501, JP
(72) HIRANO, Jun., c/o Matsushita El.Ind.CO.Ltd IP, 19F Matsushita IMP Bldg, 1-3-7 Shiromi, Chuo-ku, Osaka 540-6319, JP;
ASOU, Keigo., c/o Matsushita El.Ind.CO.Lts. IP, 19F Matsushita IMP Bldg, 1-3-7 Shiromi, Chuo-ku, Osaka 540-6319, JP
(74) Grünecker, Kinkeldey, Stockmair & Schwanhäusser, Anwaltssozietät, Leopoldstrasse 4, 80802 München, DE

(51) (8) **EP 2003832**
H 04L 12/66
(23) 16.12.2010.
(96) EP 07110422.8 15.06.2007. En
(97) EP 2003832 17.12.2008. 200851 En
(41) 11.05.2011. 201119
(54) System and method for creating multi-mode applications
(71) RESEARCH IN MOTION LIMITED, 295 Phillip Street, Waterloo, Ontario N2L 3W8, CA
(72) Smith, Christopher, 601 Emerald Street, Burlington, Ontario L7R 2P3, CA
(74) Patel, Binesh, Barker Brettell LLP, 10-12 Priests Bridge, London, SW15 5JE, GB

(51) (8) **EP 2180653**
H 04L 29/06
(23) 02.11.2010.
(96) EP 08167615.7 27.10.2008. En
(97) EP 2180653 28.04.2010. 201017 En
(41) 18.05.2011. 201120
(54) System and method for providing media content on demand via a network
(71) TouchDiva Corp. Ltd., Room 1701, Tai Yau Building, 181 Johnston Road, Wan Chai, Hong Kong, CN
(72) Haaber, Bo Løje, Plantagevej 78H, DK-3460, Birkerød, DK;
Melskens, Thomas Christian, Vintappervej 14, DK-2800, Lyngby, DK
(74) Jensen, Peter Kim, et al, Chas. Hude A/S, H.C. Andersens Boulevard 33, 1780 Copenhagen V, DK

(51) (8) **EP 2031847**
H 04M 1/60
H 04M 1/725
H 04M 1/247
H 03G 5/02
(23) 22.10.2010.
(96) EP 07115490.0 31.08.2007. En
(97) EP 2031847 04.03.2009. 200910 En
(41) 23.03.2011. 201112
(54) Method and apparatus allowing for user-selectable acoustic equalizer settings for voice calls
(71) RESEARCH IN MOTION LIMITED, 295 Phillip Street, Waterloo, Ontario N2L 3W8, CA
(72) Simmons, Sean, 120 Sandford Fleming Drive, Waterloo Ontario N2T 1E7, CA;
Forrester, Christopher M, 28 Heins Ave, Kitchener Ontario N2G 1Z8, CA;
Ranta, Craig Eric, 231 Springmount Place, Kitchener Ontario N2A 3V4, CA;
Hansson, Per Magnus Fredrik, 377 Red Osier Rd, Waterloo Ontario N2V 2W1, CA
(74) Patel, Binesh, et al, Barker Brettell LLP, 10-12 Priests Bridge, London, SW15 5JE, GB

(51) (8) **EP 1921836**
H 04M 1/725
G 06F 3/023
G 06F 9/44
(23) 03.11.2010.
(96) EP 06123888.7 10.11.2006. En

(97) EP 1921836 14.05.2008. 200820 En
(41) 06.04.2011. 201114
(54) Handheld electronic device having selectable language indicator for language selection and method therefor
(71) RESEARCH IN MOTION LIMITED, 295 Phillip Street, Waterloo, Ontario N2L 3W8, CA
(72) Scott, Sheryl Lee Lorraine, 1-185 Beverley Street, Toronto, Ontario M5T 1Y9, CA;
Somani, Zaheen, 27- 6071 Azure Road, Richmond, British Columbia V7C 2P3, CA
(74) Hibbert, Juliet Jane Grace, et al, Kilburn & Strode LLP, 20 Red Lion Street, London WC1R 4PJ, GB

(51) (8) **EP 2007139**
H 04N 5/74
(23) 02.11.2010.
(86) PCT/CN2006000589 03.04.2006.
(96) EP 06722241.4 03.04.2006. Zh
(87) WO2007112612 11.10.2007. 200741
(97) EP 2007139 24.12.2008. 200852 En
(41) 04.05.2011. 201118
(54) VIDEO INFORMATION APPARATUS AND IMAGE PROCESSING METHOD
(71) Fang, Ko-Cheng, 4F., No.130-3, Sec.1, Zhongzheng Rd., Danshui Town, Taipei County, Taiwan, CN
(72) Fang, Ko-Cheng, 4F., No.130-3, Sec.1, Zhongzheng Rd., Danshui Town, Taipei County, Taiwan, CN
(74) Chaillot, Genevive, Cabinet Chaillot, 16-20 Avenue de l'Agent Sarre, B.P. 74, 92703 Colombes Cedex, FR

(51) (8) **EP 2106661 ***
H 04N 5/92
H 04N 5/445
H 04N 5/45
G 11B 27/00
G 11B 27/10
G 11B 27/34
(23) 30.09.2010.
(30) US 22.02.2007. 677692
(86) PCT/US2008050048 02.01.2008.
(96) EP 08705640.4 02.01.2008. En
(87) WO2008103496 28.08.2008. 200835
(97) EP 2106661 07.10.2009. 200941 En
(41) 23.03.2011. 201112
(54) SYSTEMS AND METHODS FOR PRODUCTION, DELIVERY, RECORDING, AND VIEWING OF VIDEO AND SIMILAR CONTENT PRIMARILY INTENDED TO BE VIEWED IN STEP-FRAME/FRAME-ADVANCE MODE
(71) Stepframe Media, Inc., 31582 West Street, Laguna Beach, CA 92651, US
(72) ROSE, Marshall, T., P.O. Box 255268, 929 Tuscan Lane, Sacramento, CA 95865, US;
HAHN, Brenten, C., 7812 Bellaire Ave, North Hollywood, CA 91605, US;
HOPE, David, 31582 West Street, Laguna Beach, CA 92651, US
(74) Hanna, Peter William Derek, et al, Hanna Moore & Curley, 13 Lower Lad Lane, Dublin 2, IE

(51) (8) **EP 2016769 ***
H 04N 7/16
(23) 05.10.2010.
(30) US 30.01.2006. 763525 P
US 24.03.2006. 785547 P
US 30.01.2007. 669138
(86) PCT/US2007061330 30.01.2007.
(96) EP 07777687.0 30.01.2007. En
(87) WO2007120963 25.10.2007. 200743
(97) EP 2016769 21.01.2009. 200904 En
(41) 30.03.2011. 201113
(54) SYNCHRONIZING FILTER METADATA WITH A MULTIMEDIA PRESENTATION
(71) ClearPlay, Inc., 5284 Commerce Drive, Suite C-13, Salt Lake City, UT 84107, US
(72) Jarman, Matthew T., 3830 South 3100 East, Salt Lake City, UT 84109, US;
Venn, Christopher E.G., 130 Hickory Hollow Drive, Fayetteville, Georgia, 30214, US;
Iverson, Brent L., 536 South 1430 West, Lehi, UT 84043, US
(74) Alton, Andrew, Urquhart-Dykes & Lord LLP, Tower North Central, Merrion Way, Leeds LS2 8PA, GB

(51) (8) **EP 2002663 ***
H 04N 9/04
(23) 01.04.2010.
(30) EP 27.03.2006. 06300289
EP 20.07.2006. 06300822
(86) PCT/IB2007051035 23.03.2007.
(96) EP 07735246.6 23.03.2007. En
(87) WO2007110829 04.10.2007. 200740
(97) EP 2002663 17.12.2008. 200851 En
(41) 30.03.2011. 201113
(54) METHOD AND ARRANGEMENT FOR GENERATING A COLOR VIDEO SIGNAL
(71) NXP B.V., High Tech Campus 60, 5656 AG Eindhoven, NL
(72) KEFEDER, Christophe, c/o NXP Semiconductors, IP Department, Cross Oak Lane, Redhill Surrey RH1 5HA, GB
(74) Williamson, Paul Lewis, et al, NXP Semiconductors UK Ltd., Intellectual Property Department, Betchworth House, 57-65 Station Road, Redhill, Surrey RH1 1DL, GB

(51) (8) **EP 1875745 ***
H 04Q 1/14
(23) 03.11.2010.
(30) IT 27.04.2005. RM20050198
IT 14.02.2006. RM20060025 U
(86) PCT/IT2006000291 27.04.2006.
(96) EP 06728544.5 27.04.2006. En
(87) WO2006114804 02.11.2006. 200644
(97) EP 1875745 09.01.2008. 200802 En
(41) 04.05.2011. 201118
(54) DEVICE FOR INTERCEPTION, IN THE TELEPHONE CENTRAL OFFICES, OF THE EXISTING METALLIC PAIRS
(71) Mura, Silvano, Viale Merulana 48, 00185 Roma, IT
(72) Mura, Silvano, Viale Merulana 48, 00185 Roma, IT
(74) Sarpi, Maurizio, Studio Ferrario S.r.l., Via Collina, 36, 00187 Roma, IT

(51) (8) **EP 1804539**
H 04Q 7/38
(23) 04.11.2010.
(96) EP 05257668.3 14.12.2005. En
(97) EP 1804539 04.07.2007. 200727 En

(41) 13.04.2011. 201115
(54) Apparatus, and associated method, for facilitating formation of a call connection in a radio communication system with a service center identified by a short dialing code
(71) RESEARCH IN MOTION LIMITED, 295 Phillip Street, Waterloo, Ontario N2L 3W8, CA
(72) Buckley, Adrian, 413 Montclair Lane, 95376, Tracy, California, US;
Sundresh, Bokinakere Subbarao, 18 Skylark Close, Basingstoke, Hampshire, RG22 5UR, GB
(74) Hibbert, Juliet Jane Grace, et al, Kilburn & Strode LLP, 20 Red Lion Street, London WC1R 4PJ, GB

(51) [(8)] **EP 2000004** *
H 05B 3/00
C 21D 1/40
(23) 01.10.2010.
(30) US 16.03.2006. 782801 P
US 14.03.2007. 685877
(86) PCT/US2007064181 16.03.2007.
(96) EP 07758703.8 16.03.2007. En
(87) WO2007109546 27.09.2007. 200739
(97) EP 2000004 10.12.2008. 200850 En
(41) 30.03.2011. 201113
(54) METHOD AND APPARATUS FOR THE UNIFORM RESISTANCE HEATING OF ARTICLES
(71) Noble Advanced Technologies, Inc., 28213 Van Dyke Avenue, Warren, MI 48093, US
(72) MACHROWICZ, Tad, 955 Rolling Pines DR., Ortonville, MI, US
(74) Høiberg A/S, St. Kongensgade 59 A, 1264 Copenhagen K, DK

ИНДЕКС ОБЈАВЉЕНИХ ПОВУЧЕНИХ ЗАХТЕВА ЗА ПРОШИРЕЊЕ ЕВРОПСКИХ ПРИЈАВА ПАТЕНАТА ПРЕМА БРОЈУ ОБЈАВЕ ЕВРОПСКЕ ПРИЈАВЕ ПАТЕНТА

Број објаве европске пријаве патента	(51)
EP 1584569	B 65D 25/36
	B 65D 77/04
	B 65D 1/36
EP 1584782	E 06B 9/86
EP 1656869	***A 47K 10/38***
EP 1682128*	A 61K 31/425
EP 1683421	***A 21C 3/02***
EP 1687625*	G 01N 33/38
EP 1690060*	F 41G 1/00
EP 1690323*	A 61N 5/00
	A 61N 1/00
EP 1690442	***A 01C 23/04***
	B 01F 5/04
EP 1691819*	A 61K 31/74
	A 61P 3/00
EP 1692305*	C 12Q 1/48
	C 12Q 1/02
	C 12Q 1/00
	A 61K 31/00
	A 61K 31/352
	A 61K 31/436
	A 61K 31/7004
	A 61K 31/7056
	A 61P 9/00
	A 61P 35/00
EP 1696572	***H 03M 7/02***
	H 03M 7/14
EP 1697676*	F 16L 37/40
EP 1701411	***H 01R 13/658***
	H 01R 9/24
EP 1703680	H 04L 12/56
EP 1707837	***F 16D 41/10***
EP 1711054*	A 61K 31/5415
	A 01N 25/00
	A 01N 27/00
	A 01N 43/00
	A 01N 43/02
	A 01N 43/46
	A 61K 31/015
	A 61K 31/553
	A 61K 31/554
	A 61K 31/335
	A 61K 31/55
EP 1715849*	A 61K 9/12
	A 61K 31/4704
	A 61M 15/00
	B 65D 83/14
EP 1718875*	F 16B 2/14
	F 16B 5/06
	F 16B 21/09
	F 16B 21/16
	B 25B 31/00
EP 1720519*	A 61K 9/00
EP 1721938	***C 08L 95/00***
	C 08K 3/34
	C 08L 93/04

Број објаве европске пријаве патента	(51)
EP 1725106*	A 01N 47/38
EP 1728189*	G 06K 5/00
EP 1729737*	A 61K 9/20
	A 61K 31/55
	C 07D 223/00
	A 61P 25/18
	A 61P 25/24
EP 1729802*	A 61K 39/00
	A 61K 39/21
EP 1732413*	A 47B 91/02
EP 1732514*	***A 61K 9/14***
	A 61K 31/34
	A 61P 25/24
EP 1732532*	A 61K 31/191
	A 61K 31/18
	C 07D 307/02
	C 07D 311/14
	C 07D 311/10
	C 07D 311/08
	C 07D 235/02
	C 12Q 1/68
	G 01N 33/78
EP 1732900*	C 07D 231/12
	C 07D 231/14
	A 61K 31/415
	C 07D 235/10
	C 07D 409/04
	A 61P 29/00
EP 1734939*	A 61K 31/125
	C 07C 337/00
EP 1734973*	A 61K 35/00
	A 61K 38/00
	A 61P 9/10
EP 1735612*	G 01N 27/72
	G 01N 27/82
	G 01R 33/12
	G 01N 27/87
	F 16L 55/26
EP 1736631	***E 06B 9/17***
EP 1737312*	***A 44C 27/00***
	D 06M 11/83
EP 1737426*	A 61K 9/127
EP 1737455*	A 61K 31/4453
	A 61P 25/02
	A 61K 9/22
	A 61K 9/26
	A 61K 47/32
	A 61K 9/28
EP 1737484*	A 61K 38/18
	A 61P 7/06
EP 1737494*	A 61K 47/10
EP 1737496*	A 61K 47/48
	A 61P 35/00
	A 61P 43/00

Број објаве европске пријаве патента	(51)
EP 1740094*	***A 61B 5/055***
	A 61B 10/00
	C 07B 47/00
	A 61K 31/555
	A 61K 31/40
	C 07D 487/22
	C 07F 13/00
	C 07F 15/02
EP 1740109*	A 61B 17/56
	A 61F 5/00
	A 61F 2/44
EP 1740208*	A 61K 39/39
	C 12N 15/63
	C 07K 16/28
	A 61K 39/395
EP 1740225*	A 61K 51/04
	A 61K 49/00
	C 07D 307/58
	C 07D 311/70
	C 07D 311/58
	C 07C 50/30
	C 07D 311/22
	A 61K 101/02
EP 1740507*	C 02F 11/00
	C 02F 1/58
	C 02F 1/68
	C 02F 1/42
	B 09C 1/08
	E 01H 12/00
	E 01H 15/00
	C 01B 33/38
	C 01B 33/40
EP 1741134*	H 01L 23/02
EP 1742558*	A 47L 9/12
	A 47L 9/16
EP 1742960*	C 07J 71/00
	A 61K 31/58
	A 61P 19/10
	A 61P 25/28
EP 1744794*	A 01N 63/00
	A 01N 65/00
	A 61K 35/60
	A 61F 2/00
EP 1745391*	G 06F 19/00
	G 06F 17/00
	G 01N 33/48
	A 61B 5/00
EP 1753876*	C 12Q 1/68
EP 1765827*	***C 07D 487/14***
	C 07D 207/30
EP 1773111*	***A 01J 25/12***
	A 23C 19/06

Број објаве европске пријаве патента	(51)
EP 1773857*	***C 07H 21/02***
	A 61K 48/00
	A 61K 31/713
	A 61K 31/7105
	C 12N 15/88
EP 1774430*	G 06F 9/44
	G 06F 3/14
	H 04Q 7/32
EP 1776174*	***B 01D 61/00***
	C 12N 1/00
	C 12N 1/02
	B 01D 61/58
EP 1776368*	***C 07D 491/14***
	C 07D 487/04
	C 07D 498/14
	C 07D 471/14
	C 07D 471/04
	C 07D 487/14
	C 07D 513/14
	A 61K 31/55
	A 61P 31/14
EP 1778181*	A 61K 8/92
	A 61K 8/97
	A 61K 8/98
	A 61Q 5/00
	A 61Q 7/00
EP 1781665*	***C 07D 495/04***
	A 61K 31/5513
	A 61P 25/18
EP 1783218	***C 12N 15/09***
	C 07K 14/18
	C 07K 16/10
	C 12N 5/10
	C 12N 7/00
	C 12Q 1/68
EP 1797083*	***C 07D 417/12***
	C 07D 419/12
	C 07C 311/21
	A 61K 31/18
	A 61K 31/445
	A 61P 1/00
EP 1797438*	***G 06K 11/00***
	G 01R 17/10
	G 01R 33/09
	G 01D 5/16
	G 06F 3/033
EP 1802901*	***F 16K 11/07***
EP 1804539	***H 04Q 7/38***
EP 1805209*	***C 07K 14/475***
	C 07K 14/705
	A 61K 38/00
EP 1805297*	***C 12N 5/00***
	C 12N 5/02
	C 12N 5/08
	A 01N 63/00
	A 01N 65/00
EP 1806099	***A 61B 8/08***
EP 1807450*	***C 07K 16/00***
	C 07K 16/10
	A 61P 31/18

Број објаве европске пријаве патента	(51)
EP 1809650*	***C 07J 71/00***
	A 61K 31/58
	A 61P 3/04
	A 61P 25/28
EP 1810008*	***G 01N 21/75***
	G 01N 21/76
	G 01N 33/53
	G 01N 33/532
	G 01N 33/573
EP 1812374*	***C 07C 69/60***
	A 61K 31/28
	A 61P 17/06
EP 1812558*	***C 12N 5/06***
EP 1817294*	***C 07D 241/08***
	C 07D 405/12
	C 07D 405/14
	C 07D 403/12
	C 07D 401/12
	C 07D 409/12
	C 07D 243/08
	A 61K 31/496
	A 61P 29/00
EP 1824494*	***A 61K 31/5575***
	A 61P 15/12
	A 61P 15/10
	A 61K 9/06
	A 61K 47/38
	A 61K 47/14
	A 61K 47/10
EP 1827606*	***A 61P 35/00***
	A 61K 31/00
EP 1828246*	***C 07K 14/705***
	C 07K 14/715
	C 07K 5/078
	C 07K 5/02
	C 07K 7/02
	A 61K 38/04
EP 1828439*	***C 25C 3/12***
	C 25C 7/02
EP 1831006*	***B 32B 1/00***
	B 32B 1/02
	B 32B 1/08
	B 65D 1/40
	B 65D 23/10
EP 1831185*	***C 07D 249/12***
	A 61K 31/4196
	A 61P 25/00
	C 07D 257/04
	A 61K 31/41
	C 07D 233/70
	A 61K 31/4166
	C 07D 403/10
	C 07D 401/04
	C 07D 401/06
	C 07D 401/10
	C 07D 405/14
	C 07D 401/14

Број објаве европске пријаве патента	(51)
EP 1832286	***A 61K 31/343***
	A 61K 31/519
	A 61K 45/06
	A 61P 25/20
	A 61K 31/4535
EP 1833490*	***C 12N 15/113***
	A 61K 31/713
EP 1833528*	***A 61M 1/00***
EP 1834437*	***H 04K 1/00***
	H 04L 9/08
	H 04L 9/00
	G 06F 21/00
	H 04N 7/24
	H 04N 7/167
EP 1835974*	***B 01D 11/02***
	B 01J 3/02
	B 01J 8/00
	C 11B 1/10
EP 1837346	***C 07K 14/535***
EP 1838686*	***C 07D 275/03***
	A 61K 31/425
	A 61K 31/427
	A 61K 31/4427
	A 61K 31/4725
	A 61K 31/5377
	A 61P 25/28
	A 61P 3/06
	A 61P 3/10
	A 61P 9/00
	A 61P 9/10
	C 07D 417/12
EP 1839259*	***G 06Q 99/00***
	H 04K 1/00
	H 04L 9/00
EP 1841465*	***A 61K 31/135***
	C 07C 217/80
	C 07F 13/00
EP 1841856*	***C 12N 5/02***
EP 1844013*	***C 07D 209/42***
	C 07D 401/04
	A 61K 31/404
	A 61P 11/00
	A 61P 29/00
	C 07D 405/12
	C 07D 401/12
	C 07D 401/14
EP 1844433*	***G 06Q 40/00***
EP 1846016*	***A 61K 38/08***
	A 61P 9/10
	C 07K 7/06
EP 1846444*	***C 07K 14/47***
	C 07K 16/18
	C 12N 15/11
	A 61K 38/17
	G 01N 33/53
	C 12Q 1/68

Број објаве европске пријаве патента	(51)
EP 1846560*	***C 12N 15/82***
	C 12Q 1/68
	C 12N 15/53
	C 12N 9/02
	C 12N 5/10
	C 12N 5/04
	A 01H 5/10
	A 01H 5/00
EP 1846828*	***G 06F 12/02***
EP 1848549*	***G 06Q 20/00***
EP 1851202*	***C 07D 213/55***
	C 07D 213/56
	C 07D 401/12
	C 07D 413/12
	C 07D 405/12
	C 07D 409/12
	C 07D 417/12
	C 07D 401/14
	A 61P 3/08
	A 61K 31/44
	A 61K 31/4427
EP 1851229*	***C 07D 495/04***
	A 61K 31/4365
	A 61P 35/00
EP 1851249*	***C 07K 16/28***
	A 61P 35/00
	A 61P 37/00
	A 61K 39/395
EP 1852729	***G 02C 11/00***
EP 1853509*	***B 67B 1/04***
	B 65D 39/00
EP 1854062*	***G 05B 9/02***
	G 06F 15/16
	H 04M 3/487
EP 1855666*	***A 61K 31/352***
	A 61K 9/12
	A 61K 9/72
EP 1857912	***G 06F 3/00***
EP 1858893*	***C 07D 417/14***
	C 07D 417/12
	A 61K 31/427
EP 1859929	***B 32B 5/18***
	B 32B 27/12
	B 60N 2/58
	B 61D 33/00
EP 1863513*	***A 61K 38/00***
EP 1863571*	***A 61P 35/00***
	A 61K 31/4743
	C 07D 495/04
EP 1864663	***A 61K 31/50***
	A 61K 31/192
	A 61K 31/415
	A 61K 31/426
	A 61P 29/00
	A 61P 43/00
	C 07D 237/14
EP 1865777*	***A 61K 31/555***
	A 61K 9/08
	A 61P 1/16
EP 1866898*	***G 09F 15/00***

Број објаве европске пријаве патента	(51)
EP 1867642	***C 07D 307/77***
	A 61K 31/343
	A 61K 31/13
	A 61K 31/165
	A 61K 31/445
	A 61K 31/473
	A 61K 31/55
	A 61K 45/00
	A 61P 25/20
	A 61P 25/28
	A 61P 43/00
EP 1871163*	***A 01K 67/027***
	C 12N 15/85
	G 01N 33/00
EP 1871350*	***A 61K 31/16***
	A 61K 31/165
	A 61P 37/04
EP 1871361*	***A 61K 31/397***
	A 61K 35/00
	A 01N 25/00
EP 1871778*	***C 07D 498/22***
EP 1872207*	***G 06F 9/44***
	G 06F 15/02
	H 04Q 7/32
EP 1872254*	***G 06F 17/00***
	H 04Q 7/22
	H 04B 7/26
	G 06F 9/44
	G 06F 9/455
EP 1874481*	***B 05B 1/30***
	B 05B 1/02
	B 65D 83/16
	B 05B 12/02
EP 1874788*	***C 07H 9/04***
	C 07H 15/00
	C 07H 3/02
	A 61K 31/70
	A 61K 31/7004
	A 61K 31/7028
	A 61K 31/7042
	A 61P 37/00
	A 61P 35/00
	A 61P 17/00
	A 61P 11/06
EP 1875745*	***H 04Q 1/14***
EP 1877213*	***B 22D 41/18***
EP 1877414*	***C 07F 9/38***
EP 1879489*	***A 47K 13/10***
EP 1879864*	***C 07D 213/89***
	C 07D 241/10
	C 07D 239/24
	C 07D 215/60
	A 61K 31/444
	A 61P 7/02

Број објаве европске пријаве патента	(51)
EP 1879887*	***C 07D 417/12***
	C 07D 401/12
	C 07D 413/12
	C 07D 453/06
	C 07D 471/08
	C 07D 211/42
	C 07D 211/46
	A 61K 31/452
	A 61P 3/00
EP 1884513	***C 07D 231/40***
	A 61K 31/41
	A 61K 31/415
	A 61K 31/4155
	A 61K 31/4184
	A 61K 31/4192
	A 61K 31/4196
	A 61K 31/422
	A 61K 31/4245
	A 61K 31/427
	A 61K 31/428
	A 61P 3/06
EP 1885351*	***A 61K 31/196***
	A 61P 25/04
	A 61P 29/00
EP 1885955*	***E 01C 5/22***
	E 02D 29/14
	E 03F 5/06
	E 01F 9/04
EP 1888570*	***C 07D 413/00***
	C 07D 317/00
	C 07D 241/00
	C 07D 333/02
EP 1889253*	***G 10L 15/18***
	G 10L 15/26
	H 04M 3/51
EP 1889632	***A 61K 31/553***
	A 61P 3/06
	A 61P 17/00
EP 1891073*	***C 07D 487/04***
	C 07D 209/94
	C 07D 491/04
	C 07D 333/80
	C 07D 311/94
	C 07D 221/18
	C 07D 307/93
	A 61K 31/403
	A 61K 31/407
	A 61P 25/00
EP 1891100*	***C 07K 14/51***
	A 61K 38/10
	A 61K 38/17
EP 1893812*	***E 01C 7/30***
	E 01C 7/32
	E 01C 7/08
EP 1899338*	***C 07D 471/10***
	A 61K 31/438
	A 61P 1/04
EP 1899368*	***C 07K 14/435***
EP 1899467*	***C 12N 15/11***
EP 1900105*	***H 03M 13/11***
EP 1901745*	***A 61K 31/4709***

Број објаве европске пријаве патента	(51)
EP 1902049*	***C 07D 413/12***
	C 07D 265/02
	A 61K 31/536
	A 61P 5/34
EP 1904454*	***C 07D 235/08***
	C 07F 7/08
	C 07D 401/06
	C 07D 409/06
	C 07D 491/04
	A 61K 31/4188
	A 61P 1/00
EP 1906950*	***A 61K 31/33***
	A 61P 35/00
EP 1909777*	***A 61K 31/13***
EP 1910419*	***C 07K 16/30***
	C 12N 5/24
	A 61K 39/395
	G 01N 33/574
	A 61P 35/00
EP 1911490	***A 61N 1/36***
	A 61N 1/04
	A 61N 1/05
EP 1919956*	***C 07K 17/10***
	C 07K 17/04
	C 07K 1/04
	C 08J 3/075
	C 08L 1/28
	C 08L 5/00
	C 08L 5/04
	C 08L 5/06
	C 08L 5/08
	C 08L 5/12
	C 08L 89/00
EP 1921836	***H 04M 1/725***
	G 06F 3/023
	G 06F 9/44
EP 1924324*	***A 61N 5/10***
	A 61B 19/00
EP 1924554*	***C 07C 311/21***
	C 07D 233/32
	A 61K 31/18
	A 61K 31/4166
	C 07D 207/34
	C 07D 213/50
	C 07D 233/61
	C 07D 261/08
	C 07D 261/10
	C 07D 263/32
	C 07D 295/13
	C 07D 295/192
	A 61K 31/215
	A 61K 31/27
	A 61K 31/277
	A 61K 31/401
	A 61K 31/417
	A 61K 31/42
	A 61K 31/421
	A 61K 31/4409
	A 61K 31/5375

Број објаве европске пријаве патента	(51)
EP 1924568*	***C 07D 239/94***
	C 07D 401/04
	C 07D 403/04
	C 07D 401/12
	C 07D 403/12
	C 07D 405/12
	C 07D 409/12
	C 07D 413/12
	C 07D 417/12
	A 61K 31/495
EP 1928366*	***A 61F 2/46***
	A 61F 2/44
EP 1930010	***A 61K 31/565***
	A 61K 31/57
	A 61P 15/12
	A 61P 15/18
	A 61P 15/00
EP 1931340*	***A 61K 31/4427***
	A 61K 9/14
	A 61P 9/12
EP 1938439*	***H 02J 7/35***
	H 02J 7/34
	G 05F 1/67
EP 1940382*	***A 61K 31/225***
	A 61P 17/00
	A 61P 17/06
	A 61P 25/28
	A 61P 29/00
EP 1940878*	***C 07K 16/00***
	C 07K 16/28
	C 12N 15/72
EP 1942899*	***A 61K 31/513***
	C 07C 229/60
	C 07C 237/22
	C 07C 255/57
	C 07C 271/22
	C 07D 213/73
	C 07D 233/58
	C 07D 233/61
	C 07D 233/90
	C 07D 413/06
	C 07D 471/04
	C 07D 498/04
EP 1948990*	***F 16L 55/165***
EP 1951890*	***C 12P 21/06***
	A 61K 38/00
EP 1952121*	***G 01N 21/00***
	G 01N 21/75
EP 1952797	***A 61K 8/44***
	A 61Q 19/08
EP 1956908*	***A 01N 43/16***
	A 61K 31/35
EP 1957175*	***B 01D 24/24***
	B 01D 46/52
EP 1957675*	***C 12Q 1/68***
	G 06Q 50/00
EP 1960435*	***C 07K 16/46***

Број објаве европске пријаве патента	(51)
EP 1962832*	***A 61K 31/366***
	A 61K 31/397
	A 61K 31/40
	A 61K 31/553
	A 61K 45/06
	A 61P 1/16
	A 61P 3/06
EP 1962835*	***A 61K 31/397***
	A 61K 31/445
	A 61P 3/06
	A 61P 3/10
EP 1963306*	***C 07D 401/12***
	A 61K 31/4439
	A 61P 1/04
EP 1966170*	***C 07D 261/08***
	C 07D 413/08
	C 07D 413/12
	C 07D 417/08
	C 07D 413/14
EP 1967764	***F 16H 48/16***
	B 60K 17/35
	B 60K 23/06
EP 1968563*	***A 01N 55/00***
	A 61K 31/695
	A 61K 31/65
	A 61P 9/12
	A 61P 3/10
	A 61P 19/02
	A 61P 25/02
EP 1971686*	***C 12N 15/29***
	C 12N 15/09
	C 12N 15/10
EP 1971726*	***E 04H 7/00***
EP 1972005*	***H 01L 21/336***
EP 1973408*	***A 01N 43/58***
	A 01N 43/64
	A 01N 43/90
EP 1973914*	***C 07D 471/10***
	C 07D 487/10
	C 07D 519/00
	A 61K 31/55
	A 61K 31/438
	A 61K 31/4188
	A 61K 31/437
	A 61P 9/00
	A 61P 11/00
	A 61P 35/00
EP 1976519*	***A 61K 31/44***
	C 07D 471/14
EP 1978441	***G 06F 9/44***
EP 1980465	***B 61B 12/02***
EP 1981524*	***A 61K 38/06***
	A 61K 38/07
	A 61K 38/08
	A 61K 45/06
	A 61P 31/14

Број објаве европске пријаве патента	(51)
EP 1983986*	***A 61K 31/4545***
	A 61P 29/00
	C 07D 211/26
	C 07D 211/96
	C 07D 405/14
	C 07D 409/14
	C 07D 413/14
EP 1984404*	***C 07K 16/28***
	G 01N 33/564
	G 01N 33/569
	G 01N 33/574
	G 01N 33/68
EP 1986355	***H 04B 10/20***
EP 1986630*	***A 61K 31/201***
	A 61K 31/202
	A 61K 31/337
	A 61K 31/355
	A 61P 35/00
EP 1987005*	***C 07D 213/89***
	C 07D 213/73
	C 07D 409/04
	C 07D 405/04
	A 61K 31/4418
	A 61K 31/4436
	A 61K 31/443
	A 61P 9/10
EP 1988769*	***A 01N 1/00***
	A 01N 1/02
EP 1989816*	***H 04L 9/00***
	H 04L 12/54
EP 1990715	***G 06F 9/44***
EP 1991871*	***G 01N 33/543***
	G 01N 33/566
	G 01N 33/68
	G 01N 33/577
	G 01N 33/574
EP 1993358*	***A 01N 37/36***
	A 01N 43/653
	A 01N 47/24
	A 01N 37/50
	A 01N 43/54
EP 1993573*	***A 61K 35/12***
	C 12Q 1/68
	G 01N 33/53
EP 1993597*	***A 61K 39/00***
	A 61K 45/00
	C 12N 5/00
	G 01N 33/53
	A 01K 67/00
	C 07H 21/04
	C 12N 15/00
EP 1996026*	***A 22B 3/00***
	A 61D 7/04
EP 1998707*	***A 61C 9/00***
EP 1999274*	***C 12Q 1/68***
EP 1999634*	***G 06F 17/00***
EP 2000004*	***H 05B 3/00***
	C 21D 1/40
EP 2001471*	***A 61K 31/4525***
	A 61P 7/00

Број објаве европске пријаве патента	(51)
EP 2001476*	***C 07D 241/00***
	C 07D 241/02
	A 61K 31/497
EP 2001517*	***A 61K 48/00***
	C 07H 21/02
	C 07H 21/04
EP 2002663*	***H 04N 9/04***
EP 2003832	***H 04L 12/66***
EP 2004559*	***C 03B 5/26***
	C 03B 37/08
EP 2004621*	***C 07D 313/12***
	C 07F 9/54
	A 61K 31/335
	A 61P 37/00
EP 2004626*	***C 07D 401/04***
	A 61K 31/4439
	A 61P 37/00
EP 2004793*	***C 12C 5/02***
EP 2007139	***H 04N 5/74***
EP 2008993	***C 07C 233/18***
	C 07C 231/24
	A 61K 31/165
	A 61P 25/00
	A 61P 37/00
	A 61P 15/08
	A 61P 9/00
	A 61P 3/00
WO 2009076359	***G 01N 33/68***
	G 01N 33/564
EP 2010654*	***C 12N 9/62***
	C 12C 5/00
EP 2012781*	***A 61K 31/425***
EP 2013203*	***C 07D 417/12***
EP 2016114*	***C 08G 73/02***
EP 2016769*	***H 04N 7/16***
EP 2024359*	***C 07D 401/14***
	A 61K 31/166
	A 61K 31/4439
	A 61K 31/4453
	A 61K 31/4545
	A 61P 25/18
	A 61P 25/24
	A 61P 25/28
	C 07C 233/79
	C 07D 211/06
	C 07D 295/04
	C 07D 401/12
EP 2024978*	***G 11C 16/04***
	G 11C 16/10
EP 2026793*	***A 61K 31/343***
	A 61P 25/28
	A 61P 25/16
	A 61P 25/22
	A 61P 25/24
	A 61P 25/30
EP 2027677*	***H 04L 12/24***
EP 2029484*	***C 01F 7/02***
	C 01F 7/18
	C 08K 3/22
	C 09K 21/02

Број објаве европске пријаве патента	(51)
EP 2029581*	***C 07D 403/12***
	C 07D 401/12
	A 61K 31/416
	A 61P 29/00
EP 2030025*	***G 01N 33/74***
EP 2031160	***E 05B 19/02***
	E 05B 19/06
EP 2031847	***H 04M 1/60***
	H 04M 1/725
	H 04M 1/247
	H 03G 5/02
EP 2032152*	***A 61K 38/17***
	A 61P 35/00
EP 2035042*	***A 61K 47/48***
EP 2037919*	***A 61K 31/45***
	A 61K 31/454
	A 61K 31/4545
	A 61P 35/00
EP 2038927*	***H 01L 23/528***
EP 2039349	***A 61K 9/00***
	A 61K 9/20
	A 61K 31/445
	C 07D 211/32
EP 2040907*	***B 29C 65/00***
	E 04F 15/16
EP 2043631*	***A 61K 31/397***
	A 61K 31/4184
	A 61K 31/4439
	A 61K 31/4709
	A 61K 38/58
	A 61P 7/02
	A 61P 9/04
	A 61P 9/10
	A 61P 9/12
	A 61P 9/14
	A 61P 43/00
EP 2043645*	***A 61K 31/4745***
	A 61P 35/00
EP 2044086*	***C 07D 513/04***
	A 61K 31/519
	A 61P 29/00
EP 2048137	***C 07D 277/46***
	C 07D 417/12
	C 07D 231/40
	C 07D 403/12
	C 07D 487/08
	A 61K 31/415
	A 61K 31/426
	A 61K 31/427
	A 61P 3/10
	C 07C 69/92
EP 2049568*	***C 07K 14/71***
	A 61K 38/04
EP 2056849*	***A 61K 38/00***
	A 61K 39/00
	A 61K 39/38
	G 01N 33/53
	C 12N 5/06
	C 07K 16/00
	C 07H 21/04

Број објаве европске пријаве патента	(51)
EP 2061451*	***A 61K 31/16***
	A 61K 31/165
	A 61K 31/337
	A 61K 45/06
	A 61P 35/00
	A 61P 17/00
EP 2061770*	***C 07D 239/22***
	C 07D 239/49
	C 07D 239/54
	C 07D 239/58
	C 07D 239/70
	C 07D 401/06
	C 07D 401/10
	C 07D 403/04
	C 07D 403/10
	C 07D 405/04
	C 07D 413/10
	C 07D 417/10
	C 07D 471/14
	C 07D 487/04
	C 07D 491/10
EP 2064351*	***C 12Q 1/70***
	C 12Q 1/68
EP 2064547*	***G 01N 33/53***
EP 2064803*	***H 02K 21/24***
EP 2067473	***A 61K 31/205***
	A 61P 9/10
EP 2076261*	***A 61K 31/4166***
	C 07D 211/70
	C 07D 213/30
	C 07D 233/60
	C 07D 233/58
	A 61K 31/4402
	A 61K 31/4406
	A 61K 31/4409
	A 61P 11/00
	A 61P 13/00
EP 2079687*	***C 07D 209/14***
	C 07D 209/80
EP 2079852*	***C 12Q 1/68***
EP 2085861	***G 06F 3/044***
EP 2088149	***C 07D 471/08***
	A 61K 31/444
	A 61P 25/28
EP 2088363	***F 21V 1/00***
	F 21V 11/00
	F 21W 121/00
EP 2091696*	***B 25G 1/00***
	B 25G 1/10
	A 01B 1/02
EP 2096562	***G 06F 17/30***
EP 2097057*	***A 61J 1/03***
EP 2100246*	***G 06F 19/00***
EP 2100583	***A 61K 8/06***
	A 61K 8/04
	A 61K 8/49
	A 61Q 1/02
	A 61K 8/40
	A 61K 8/895
	A 61K 8/891

Број објаве европске пријаве патента	(51)
EP 2100897	***C 07F 9/10***
	A 23L 1/30
	A 23L 1/29
	C 12P 7/64
EP 2101767*	***A 61K 31/435***
	A 61K 31/44
	A 61K 9/20
	A 61K 9/28
	A 61K 9/48
EP 2102209*	***C 07D 471/22***
	A 61K 31/551
	A 61P 25/00
EP 2102211*	***C 07D 487/04***
	A 61K 31/519
	A 61P 35/00
EP 2103956	***G 01S 11/10***
	H 04M 1/725
EP 2106661*	***H 04N 5/92***
	H 04N 5/445
	H 04N 5/45
	G 11B 27/00
	G 11B 27/10
	G 11B 27/34
EP 2109461*	***A 61K 45/06***
EP 2109680*	***C 12N 15/85***
EP 2111734	***A 01B 33/08***
EP 2112300	***E 04H 12/22***
EP 2113346	***B 26B 5/00***
EP 2113653	***F 02M 59/06***
	F 02M 59/10
	F 04B 53/00
	F 04B 53/08
	F 04B 53/18
EP 2115197*	***D 04B 21/14***
	A 41D 27/06
EP 2119335	***A 01C 17/00***
EP 2120911*	***A 61K 31/165***
	A 61K 31/17
	C 07C 237/24
	C 07C 275/42
	A 61P 3/04
	A 61K 31/41
	A 61K 31/435
	C 07D 207/08
	C 07D 207/16
	C 07D 207/34
	C 07D 209/42
	C 07D 213/72
	C 07D 213/81
	C 07D 213/82
	C 07D 215/04
EP 2121046*	***A 61L 9/04***
	A 61L 9/12
EP 2125825*	***C 07D 491/04***
	A 61K 31/4741
	A 61P 9/10
EP 2126113*	***C 12Q 1/68***
EP 2130461	***A 47G 9/10***
EP 2133104	***A 61L 9/12***
	A 47K 10/32
	B 65H 75/18

Број објаве европске пријаве патента	(51)
EP 2133781	***G 06F 3/048***
EP 2139480*	***A 61K 31/495***
	A 61K 45/06
	A 61P 9/00
	A 61P 3/10
	A 61P 5/50
EP 2140150*	***F 16B 7/18***
	E 04B 1/19
	E 04H 12/18
	F 16B 7/20
	F 16B 21/04
EP 2143345	***A 24D 1/02***
	B 31F 1/07
	B 41M 3/10
	A 24C 5/00
EP 2145196*	***G 01R 31/3187***
EP 2145548	***A 23L 1/317***
	A 23L 1/01
EP 2146177	***F 41H 1/08***
	A 42B 3/12
	B 29C 33/48
	B 29C 45/00
	B 29C 45/44
	B 29C 65/04
EP 2146699*	***A 61K 9/20***
	A 61K 31/55
EP 2148750*	***B 21D 5/14***
EP 2152751*	***C 07K 16/28***
	A 61K 47/48
EP 2155876*	***C 12N 15/11***
EP 2160411*	***C 07K 16/28***
	C 07K 16/46
	C 12N 15/13
	C 12N 5/20
	A 61K 39/395
	A 61P 7/00
EP 2161208	***B 65D 21/02***
	B 65D 21/06
EP 2162124*	***A 61K 31/13***
	A 61P 27/02
	A 61P 27/10
EP 2164443*	***A 61H 37/00***
	A 61H 7/00
EP 2165706	***A 61K 31/415***
	A 61K 9/00
	A 61P 1/02
EP 2167649*	***C 12N 5/08***
	A 61K 35/14
	A 61K 39/00
	A 61P 35/00
EP 2171059*	***C 12N 15/11***
	A 61K 31/713
EP 2173343*	***A 61K 31/4468***
	A 61P 25/28
	A 61K 31/519

Број објаве европске пријаве патента	(51)
EP 2173715*	***C 07D 211/58***
	C 07D 401/12
	C 07D 409/12
	C 07D 413/12
	C 07D 417/12
	A 61K 31/445
	A 61K 31/4523
	A 61K 31/4535
	A 61K 31/454
	A 61K 31/4545
	A 61P 11/00
	A 61P 17/00
	A 61P 19/00
	A 61P 29/00
EP 2180653	***H 04L 29/06***
EP 2182986*	***A 61K 45/06***
	A 61P 35/00
	A 61K 31/337
	A 61K 31/4365
	A 61K 31/506
	A 61K 31/517
	A 61K 31/519
EP 2183251*	***C 07D 471/16***
	A 61P 31/00
	A 61P 29/00
	A 61P 35/00
	A 61K 31/4745
EP 2185533*	***C 07D 311/30***

Број објаве европске пријаве патента	(51)
EP 2190411*	***A 61K 9/127***
	A 61K 31/69
	A 61K 41/00
	A 61K 47/48
EP 2190412*	***A 61K 9/127***
	A 61K 31/69
	A 61K 41/00
	A 61K 47/48
EP 2190417*	***A 61K 9/20***
	A 61K 9/50
	A 61K 31/00
	A 61K 31/4439
	A 61K 31/64
EP 2195077*	***A 61N 1/00***
EP 2201951	***A 61K 31/44***
	A 61K 47/26
	A 61K 47/34
	A 01N 43/40
	A 61K 8/34
	A 61K 8/49
	A 61K 8/60
EP 2209796*	***C 07K 5/06***
	A 61P 31/22
EP 2227478*	***C 07F 9/655***
	A 61K 31/506
	C 07D 411/04
	A 61P 31/18

Број објаве европске пријаве патента	(51)
EP 2241323	***A 61K 38/17***
	C 07K 14/78
	C 07K 16/30
EP 2262646*	***B 41M 3/14***
	B 42D 15/00
	B 42D 15/10
EP 2303322*	***A 61K 39/165***
	C 12N 15/863
	C 07K 14/12
	C 12N 7/01
	C 12N 5/22
EP 2314567	C 07C 233/76
	C 07C 311/14
	C 07D 213/81
	C 07D 213/82
	C 07D 333/38
	C 07D 295/155
	A 61P 19/02
	A 61P 29/00
	A 61P 11/06
	A 61K 31/167
	A 61K 31/381
	A 61K 31/44
	A 61K 31/445

ИНДЕКС ОБЈАВЉЕНИХ ПОВУЧЕНИХ ЗАХТЕВА ЗА ПРОШИРЕЊЕ ЕВРОПСКИХ ПРИЈАВА ПАТЕНАТА ПРЕМА ПОДНОСИОЦИМА ПРИЈАВЕ

(71)	(51)	Број објаве европске пријаве патента	(54)
4SC AG, DE	***C 07D 495/04*** ***A 61K 31/4365*** ***A 61P 35/00***	EP 1851229*	TETRAHYDROPYRIDOTHIOPHENES FOR THE TREATMENT OF PROLIFERATIVE DISEASES SUCH AS CANCER
ABBOTT LABORATORIES, US	***C 07D 498/22***	EP 1871778*	FERMENTATION BROTH EXTRACTION OF K-252A
Abbott Laboratories, US	***C 12N 15/11***	EP 2155876*	METHODS FOR ASSESSING THE DELIVERY OF SMALL INHIBITORY RNA MOLECULES
Abgenix, US	A 61K 39/39 C 12N 15/63 C 07K 16/28 A 61K 39/395	EP 1740208*	MONOCLONAL ANTIBODIES SPECIFIC FOR HUMAN OX40L (CD134L)
Acadia Pharmaceuticals Inc., US	***A 61K 31/4468*** ***A 61P 25/28*** ***A 61K 31/519***	EP 2173343*	USE OF PIMAVANSERIN IN THE TREATMENT OF PARKINSON AND SYMPTOMS THEREOF
ADC GmbH, DE	***H 01R 13/658*** ***H 01R 9/24***	EP 1701411	Connection box for data network
ADC GmbH, DE	***E 04H 12/22***	EP 2112300	Foundation body, method for producing a foundation body and method for setting up a mast
Aditech Pharma AG, CH	***C 07C 69/60*** ***A 61K 31/28*** ***A 61P 17/06***	EP 1812374*	NOVEL SALTS OF FUMARIC ACID MONOALKYLESTERS AND THEIR PHARMACEUTICAL USE
Aditech Pharma AG, CH	***A 61K 31/225*** ***A 61P 17/00*** ***A 61P 17/06*** ***A 61P 25/28*** ***A 61P 29/00***	EP 1940382*	COMBINATION THERAPY WITH FUMARIC ACID ESTERS FOR THE TREATMENT OF AUTOIMMUNE AND/OR INFLAMMATORY DISORDERS
Advanced Life Science Institute, JP	***C 12N 15/09*** ***C 07K 14/18*** ***C 07K 16/10*** ***C 12N 5/10*** ***C 12N 7/00*** ***C 12Q 1/68***	EP 1783218	HCV RNA HAVING NOVEL SEQUENCE
Alantos Pharmaceuticals Holding, US	***C 07D 487/04*** ***A 61K 31/519*** ***A 61P 35/00***	EP 2102211*	HETEROBICYCLIC METALLOPROTEASE INHIBITORS
Alcatel Lucent, FR	***H 04B 10/20***	EP 1986355	Method for maintaining the compatibility of legacy receivers, optical distributing network structure and parts thereof including a method for using such a part
Allit AG Kunststofftechnik, DE	***B 65D 21/02*** ***B 65D 21/06***	EP 2161208	Storage box
Almirall, ES	***C 07D 213/89*** ***C 07D 213/73*** ***C 07D 409/04*** ***C 07D 405/04*** ***A 61K 31/4418*** ***A 61K 31/4436*** ***A 61K 31/443*** ***A 61P 9/10***	EP 1987005*	NEW PYRIDIN-3-AMINE DERIVATIVES
Alnylam Pharmaceuticals Inc., US	***C 12N 15/113*** ***A 61K 31/713***	EP 1833490*	RNAI MODULATION OF RSV AND THERAPEUTIC USES THEREOF

(71)	(51)	Број објаве европске пријаве патента	(54)
Alza Corporation, US	***A 61K 9/127*** ***A 61K 31/69*** ***A 61K 41/00*** ***A 61K 47/48***	EP 2190411*	LIPOSOME COMPOSITIONS FOR IN VIVO ADMINISTRATION OF BORONIC ACID COMPOUNDS
Alza Corporation, US	***A 61K 9/127*** ***A 61K 31/69*** ***A 61K 41/00*** ***A 61K 47/48***	EP 2190412*	LIPOSOME FORMULATIONS OF BORONIC ACID COMPOUNDS
Amazonen-Werke, DE	***A 01B 33/08***	EP 2111734	Power harrow
Amazonen-Werke, DE	***A 01C 17/00***	EP 2119335	Centrifugal spreader
Ambrilia Biopharma Inc., CA	***A 61K 45/06***	EP 2109461*	METHOD FOR IMPROVING PHARMACOKINETICS
Ambrx, US	***C 12P 21/06*** ***A 61K 38/00***	EP 1951890*	METHODS AND COMPOSITIONS COMPRISING NON-NATURAL AMINO ACIDS
Ambrx, US	***C 07D 209/14*** ***C 07D 209/80***	EP 2079687*	COMPOSITIONS CONTAINING, METHODS INVOLVING, AND USES OF NON-NATURAL AMINO ACIDS AND POLYPEPTIDES
Amgen Inc., US	***C 07D 241/08*** ***C 07D 405/12*** ***C 07D 405/14*** ***C 07D 403/12*** ***C 07D 401/12*** ***C 07D 409/12*** ***C 07D 243/08*** ***A 61K 31/496*** ***A 61P 29/00***	EP 1817294*	1,2,3,4-TETRAHYDROPYRAZIN-2-YL ACETAMIDES AND THEIR USE AS BRADYKININ ANTAGONISTS FOR THE TREATMENT OF INFLAMMATION RELATED DISORDERS
Amgen Inc., US	***C 07K 14/51*** ***A 61K 38/10*** ***A 61K 38/17***	EP 1891100*	SCLEROSTIN EPITOPES
Amgen,US;	A 61K 39/39 C 12N 15/63 C 07K 16/28 A 61K 39/395	EP 1740208*	MONOCLONAL ANTIBODIES SPECIFIC FOR HUMAN OX40L (CD134L)
Andrikopoulos, GR	***F 16B 7/18*** ***E 04B 1/19*** ***E 04H 12/18*** ***F 16B 7/20*** ***F 16B 21/04***	EP 2140150*	VARIABLE AND FIXED JOINTS-NODES WITH EMBEDDED 2-PART MECHANICAL CONNECTOR FOR LATERAL INTERCONNECTION OF TUBES RODS BEAMS FOR CONSTRUCTION OF TRUSSES
Antisoma Ventures Limited, GB	***C 07D 471/16*** ***A 61P 31/00*** ***A 61P 29/00*** ***A 61P 35/00*** ***A 61K 31/4745***	EP 2183251*	INDAZOLE COMPOUNDS FOR TREATING INFLAMMATORY DISORDERS, DEMYELINATING DISORDERS AND CANCERS
Apptera, US	***G 05B 9/02*** ***G 06F 15/16*** ***H 04M 3/487***	EP 1854062*	SYSTEM FOR DYNAMIC AD SELECTION AND PLACEMENT WITHIN A VOICE APPLICATION ACCESSED THROUGH AN ELECTRONIC INFORMATION PAGE
ARIAD PHARMACEUTICALS, US	***A 61K 48/00*** ***C 07H 21/02*** ***C 07H 21/04***	EP 2001517*	REGULATED EXPRESSION OF RECOMBINANT PROTEINS FROM ADENO-ASSOCIATED VIRAL VECTORS
Array Biopharma, US	***C 07D 403/12*** ***C 07D 401/12*** ***A 61K 31/416*** ***A 61P 29/00***	EP 2029581*	P38 INHIBITORS AND METHODS OF USE THEREOF
ARTA PLAST AB, SE	***A 23L 1/317*** ***A 23L 1/01***	EP 2145548	Method for holding and treating sausage meat in a container

(71)	(51)	Број објаве европске пријаве патента	(54)
Artes Medical, US	***A 61M 1/00***	EP 1833528*	INJECTION APPARATUS HAVING A PLURALITY OF STOPPERS
ASSA ABLOY Sicherheitstechnik GmbH, DE	***E 05B 19/02*** ***E 05B 19/06***	EP 2031160	Lock-key combination
AstraZeneca AB, SE	***C 07D 275/03*** ***A 61K 31/425*** ***A 61K 31/427*** ***A 61K 31/4427*** ***A 61K 31/4725*** ***A 61K 31/5377*** ***A 61P 25/28*** ***A 61P 3/06*** ***A 61P 3/10*** ***A 61P 9/00*** ***A 61P 9/10*** ***C 07D 417/12***	EP 1838686*	DERIVATIVES OF ISOTHIAZOL-3(2H)-ONE 1,1-DIOXIDES AS LIVER X RECEPTOR MODULATORS
AstraZeneca AB, SE	***C 07D 401/14*** ***A 61K 31/166*** ***A 61K 31/4439*** ***A 61K 31/4453*** ***A 61K 31/4545*** ***A 61P 25/18*** ***A 61P 25/24*** ***A 61P 25/28*** ***C 07C 233/79*** ***C 07D 211/06*** ***C 07D 295/04*** ***C 07D 401/12***	EP 2024359*	COMPOUNDS THAT ARE AGONISTS OF MUSCARINIC RECEPTORS AND THAT MAY BE EFFECTIVE IN TREATING PAIN, ALZHEIMER'S DECEASE AND/OR SCHIZOPHRENIA
AstraZeneca AB, SE	***C 07D 277/46*** ***C 07D 417/12*** ***C 07D 231/40*** ***C 07D 403/12*** ***C 07D 487/08*** ***A 61K 31/415*** ***A 61K 31/426*** ***A 61K 31/427*** ***A 61P 3/10*** ***C 07C 69/92***	EP 2048137	Benzamide derivatives and their use as glucokinase activating agents.
Aydinoglu, TR	***A 61K 31/44*** ***A 61K 47/26*** ***A 61K 47/34*** ***A 01N 43/40*** ***A 61K 8/34*** ***A 61K 8/49*** ***A 61K 8/60***	EP 2201951	Octenidine composition
Azad Pharmaceutical Ingredients AG, CH	***C 07D 313/12*** ***C 07F 9/54*** ***A 61K 31/335*** ***A 61P 37/00***	EP 2004621*	POLYMORPHIC FORMS OF OLOPATADINE HYDROCHLORIDE AND METHODS FOR PRODUCING OLOPATADINE AND SALTS THEREOF
BASF SE, DE	***A 01N 37/36*** ***A 01N 43/653*** ***A 01N 47/24*** ***A 01N 37/50*** ***A 01N 43/54***	EP 1993358*	METHOD OF INDUCING VIRUS TOLERANCE OF PLANTS

(71)	(51)	Број објаве европске пријаве патента	(54)
BASF SE, DE	***C 07D 239/22*** ***C 07D 239/49*** ***C 07D 239/54*** ***C 07D 239/58*** ***C 07D 239/70*** ***C 07D 401/06*** ***C 07D 401/10*** ***C 07D 403/04*** ***C 07D 403/10*** ***C 07D 405/04*** ***C 07D 413/10*** ***C 07D 417/10*** ***C 07D 471/14*** ***C 07D 487/04*** ***C 07D 491/10***	EP 2061770*	PIPERAZINE COMPOUNDS WITH HERBICIDAL ACTION
Bavarian Nordic A/S, DK	***C 12Q 1/70*** ***C 12Q 1/68***	EP 2064351*	PHENOTYPIC AND GENOTYPIC DIFFERENCES OF MVA STRAINS
Bavarian Nordic A/S, DK	***A 61K 39/165*** ***C 12N 15/863*** ***C 07K 14/12*** ***C 12N 7/01*** ***C 12N 5/22***	EP 2303322*	RECOMBINANT MODIFIED VACCINIA VIRUS MEASLES VACCINE
Bayer CropScience AG, DE	A 01N 47/38	EP 1725106*	METHOD FOR COMBATING WEEDS
Bayer HealthCare AG, DE	***C 07D 417/14*** ***C 07D 417/12*** ***A 61K 31/427***	EP 1858893*	1,3-THIAZOLE-5-CARBOXAMIDES USEFUL AS CANCER CHEMOTHERAPEUTIC AGENTS
Bayer Schering Pharma Aktiengesellschaft, DE	***C 07D 413/12*** ***C 07D 265/02*** ***A 61K 31/536*** ***A 61P 5/34***	EP 1902049*	NON-STEROIDAL PROGESTERONE RECEPTOR MODULATORS
Bayer Schering Pharma Aktiengesellschaft, DE	***A 61K 31/565*** ***A 61K 31/57*** ***A 61P 15/12*** ***A 61P 15/18*** ***A 61P 15/00***	EP 1930010	Application of estradiol valerate or 17ß-estradiol in combination with dienogest for oral therapy to maintain and/or increase the female libido
Bayer Schering Pharma Oy, FI	***G 01N 33/543*** ***G 01N 33/566*** ***G 01N 33/68*** ***G 01N 33/577*** ***G 01N 33/574***	EP 1991871*	NOVEL ASSAY FOR THE DETECTION OF AN ANTIBODY BOUND TO A CELL MEMBRANE RECEPTOR
Beiersdorf AG, DE	***A 61K 8/06*** ***A 61K 8/04*** ***A 61K 8/49*** ***A 61Q 1/02*** ***A 61K 8/40*** ***A 61K 8/895*** ***A 61K 8/891***	EP 2100583	Foundation with particular organic light filter
Bianchi,IT;	***A 47K 13/10***	EP 1879489*	DEVICE FOR RAISING AND LOWERING WATER CLOSET SEATS AND COVERS
BioAlliance Pharma, FR	***A 61K 31/415*** ***A 61K 9/00*** ***A 61P 1/02***	EP 2165706	Treating Inflammatory Pain in Mucosa of the Oral Cavity Using Mucosal Prolonged Release Bioadhesive Therapeutic Carriers.
Biogen Idec MA Inc., US	***B 01D 61/00*** ***C 12N 1/00*** ***C 12N 1/02*** ***B 01D 61/58***	EP 1776174*	USE OF DEPTH FILTRATION IN SERIES WITH CONTINUOUS CENTRIFUGATION TO CLARIFY MAMMALIAN CELL CULTURES

(71)	(51)	Број објаве европске пријаве патента	(54)
Biogen Idec MA Inc., US	***C 07D 471/10*** ***C 07D 487/10*** ***C 07D 519/00*** ***A 61K 31/55*** ***A 61K 31/438*** ***A 61K 31/4188*** ***A 61K 31/437*** ***A 61P 9/00*** ***A 61P 11/00*** ***A 61P 35/00***	EP 1973914*	TRANSFORMING GROWTH FACTOR MODULATORS
Biolipox AB, SE	***C 07D 209/42*** ***C 07D 401/04*** ***A 61K 31/404*** ***A 61P 11/00*** ***A 61P 29/00*** ***C 07D 405/12*** ***C 07D 401/12*** ***C 07D 401/14***	EP 1844013*	INDOLES USEFUL IN THE TREATMENT OF INFLAMMATION
Bioriginal Food & Science Corp., CA	***C 12N 15/82*** ***C 12Q 1/68*** ***C 12N 15/53*** ***C 12N 9/02*** ***C 12N 5/10*** ***C 12N 5/04*** ***A 01H 5/10*** ***A 01H 5/00***	EP 1846560*	NOVEL OMEGA-3 FATTY ACID DESATURASE FAMILY MEMBERS AND USES THEREOF
Biotie Therapies Corp., FI	***C 07C 311/21*** ***C 07D 233/32*** ***A 61K 31/18*** ***A 61K 31/4166*** ***C 07D 207/34*** ***C 07D 213/50*** ***C 07D 233/61*** ***C 07D 261/08*** ***C 07D 261/10*** ***C 07D 263/32*** ***C 07D 295/13*** ***C 07D 295/192*** ***A 61K 31/215*** ***A 61K 31/27*** ***A 61K 31/277*** ***A 61K 31/401*** ***A 61K 31/417*** ***A 61K 31/42*** ***A 61K 31/421*** ***A 61K 31/4409*** ***A 61K 31/5375***	EP 1924554*	SULPHONAMIDE DERIVATIVES
BNLfood Investments SARL, LU	***C 07F 9/10*** ***A 23L 1/30*** ***A 23L 1/29*** ***C 12P 7/64***	EP 2100897	Lecithin based composition and its use in food

(71)	(51)	Број објаве европске пријаве патента	(54)
Boehringer Ingelheim International GmbH, DE	C 07C 233/76 C 07C 311/14 C 07D 213/81 C 07D 213/82 C 07D 333/38 C 07D 295/155 A 61P 19/02 A 61P 29/00 A 61P 11/06 A 61K 31/167 A 61K 31/381 A 61K 31/44 A 61K 31/445	EP 2314567	Inhibitors of the microsomal prostaglandin E2 synthase-1
Boehringer Ingelheim International GmbH,DE;	***A 61K 31/397*** ***A 61K 31/4184*** ***A 61K 31/4439*** ***A 61K 31/4709*** ***A 61K 38/58*** ***A 61P 7/02*** ***A 61P 9/04*** ***A 61P 9/10*** ***A 61P 9/12*** ***A 61P 9/14*** ***A 61P 43/00***	EP 2043631*	NEW INDICATIONS FOR DIRECT THROMBIN INHIBITORS IN THE CARDIOVASCULAR FIELD
Boehringer Ingelheim Pharma GmbH & Co. KG, DE	***A 61K 31/397*** ***A 61K 31/4184*** ***A 61K 31/4439*** ***A 61K 31/4709*** ***A 61K 38/58*** ***A 61P 7/02*** ***A 61P 9/04*** ***A 61P 9/10*** ***A 61P 9/12*** ***A 61P 9/14*** ***A 61P 43/00***	EP 2043631*	NEW INDICATIONS FOR DIRECT THROMBIN INHIBITORS IN THE CARDIOVASCULAR FIELD
Boldrini S.p.a., IT	***B 21D 5/14***	EP 2148750*	APPARATUS FOR BENDING PLATES WITH ROLLS
Bristol-Myers Squibb Company, US	A 61K 31/425	EP 1682128*	PROCESS AND FORMULATION CONTAINING EPOTHILONES AND ANALOGS THEREOF
Bristol-Myers Squibb Company, US	***C 07D 487/14*** ***C 07D 207/30***	EP 1765827*	A METHOD FOR PREPARING PYRROLOTRIAZINE COMPOUNDS
Bristol-Myers Squibb Company, US	***C 07D 491/14*** ***C 07D 487/04*** ***C 07D 498/14*** ***C 07D 471/14*** ***C 07D 471/04*** ***C 07D 487/14*** ***C 07D 513/14*** ***A 61K 31/55*** ***A 61P 31/14***	EP 1776368*	INHIBITORS OF HCV REPLICATION
Busi,IT;	A 44C 27/00 D 06M 11/83	EP 1737312*	METHOD FOR MANUFACTURING A YARN OF PRECIOUS METAL, APPARATUS, COMPOSITE YARN AND FRAME
Canadian Blood Services, CA	***C 12N 5/02***	EP 1841856*	A METHOD OF CRYOPRESERVING CELLS AND TISSUES BY LIPOSOMAL DELIVERY OF SUGARS TO ENHANCE POST-THAW VIABILITY

(71)	(51)	Број објаве европске пријаве патента	(54)
Cartiera Lucchese S.p.A., IT	***A 61L 9/12*** ***A 47K 10/32*** ***B 65H 75/18***	EP 2133104	Core for Rolls
Celeste Industries Corporation, US	***A 61L 9/04*** ***A 61L 9/12***	EP 2121046*	FRAGRANCE DISPENSER
CELGENE CORPORATION, US	***C 12N 5/08*** ***A 61K 35/14*** ***A 61K 39/00*** ***A 61P 35/00***	EP 2167649*	IMMUNOTHERAPY FOR HEMATOLOGICAL MALIGNANCIES
Cell Genesys Inc.,US;	***A 61K 48/00*** ***C 07H 21/02*** ***C 07H 21/04***	EP 2001517*	REGULATED EXPRESSION OF RECOMBINANT PROTEINS FROM ADENO-ASSOCIATED VIRAL VECTORS
Cellerix,ES;	***C 12N 5/06***	EP 1812558*	IDENTIFICATION AND ISOLATION OF MULTIPOTENT CELLS FROM NON-OSTEOCHONDRAL MESENCHYMAL TISSUE
Centre de Recherche Public de la, LU	***C 12Q 1/68***	EP 2126113*	DIAGNOSTIC MARKER AND PLATFORM FOR DRUG DESIGN IN MYOCARDIAL INFARCTION AND HEART FAILURE
Centre National de la Recherche Scientifique,FR;	***C 07D 471/22*** ***A 61K 31/551*** ***A 61P 25/00***	EP 2102209*	NOVEL TRIAZABENZO[A]NAPHTHO[2,1,8-cde]AZULENE DERIVATIVES, METHOD FOR PREPARING THE SAME AND PHARMACEUTICAL COMPOSITIONS CONTAINING THE SAME
CEREP, FR	***C 07D 417/12*** ***C 07D 401/12*** ***C 07D 413/12*** ***C 07D 453/06*** ***C 07D 471/08*** ***C 07D 211/42*** ***C 07D 211/46*** ***A 61K 31/452*** ***A 61P 3/00***	EP 1879887*	NPY ANTAGONISTS, PREPARATION AND USE
Ceres,US;	***C 12N 15/29*** ***C 12N 15/09*** ***C 12N 15/10***	EP 1971686*	NUCLEOTIDE SEQUENCES AND CORRESPONDING POLYPEPTIDES CONFERRING IMPROVED NITROGEN USE EFFICIENCY CHARACTERISTICS IN PLANTS
Chelak, US	***E 04H 7/00***	EP 1971726*	A MULTI-FORM SILO STORAGE SYSTEM
CHIESI FARMACEUTICI S.p.A., IT	A 61K 9/12 A 61K 31/4704 A 61M 15/00 B 65D 83/14	EP 1715849*	STABLE PHARMACEUTICAL SOLUTION FORMULATION FOR PRESSURIZED METERED DOSE INHALERS
CHIESI FARMACEUTICI S.p.A., IT	A 61K 47/10	EP 1737494*	FREEZE-DRIED, FREE-FLOWING, PARTICULATE COMPOSITION HAVING IMPROVED PALATABILITY
Ciocca, IT	A 44C 27/00 D 06M 11/83	EP 1737312*	METHOD FOR MANUFACTURING A YARN OF PRECIOUS METAL, APPARATUS, COMPOSITE YARN AND FRAME
ClearPlay, US	***H 04N 7/16***	EP 2016769*	SYNCHRONIZING FILTER METADATA WITH A MULTIMEDIA PRESENTATION

(71)	(51)	Број објаве европске пријаве патента	(54)
Coley Pharmaceutical GmbH,DE;	***C 12N 15/11***	EP 1899467*	MODIFIED OLIGORIBONUCLEOTIDE ANALOGS WITH ENHANCES IMMUNOSTIMULATORY ACTIVITY
Coley Pharmaceutical Group, US	***C 12N 15/11***	EP 1899467*	MODIFIED OLIGORIBONUCLEOTIDE ANALOGS WITH ENHANCES IMMUNOSTIMULATORY ACTIVITY
Commonwealth Scientific and Industrial, AU	***C 25C 3/12*** ***C 25C 7/02***	EP 1828439*	PROTECTIVE ANODE COATINGS
Concretec Ltd., IL	G 01N 33/38	EP 1687625*	METHOD, APPARATUS AND SYSTEM FOR FORECASTING STRENGTH OF CEMENTITIOUS MATERIAL
Conforma Therapeutics Corporation, US	***A 61K 31/397*** ***A 61K 35/00*** ***A 01N 25/00***	EP 1871361*	PHOSPHOLIPID-BASED PHARMACEUTICAL FORMULATIONS AND METHODS FOR PRODUCING AND USING SAME
Convergence Ct, US	G 06K 5/00	EP 1728189*	SYSTEM AND METHOD FOR CONTROLLING ACCESS AND USE OF PATIENT MEDICAL DATA RECORDS
Cour, FR	***H 02J 7/35*** ***H 02J 7/34*** ***G 05F 1/67***	EP 1938439*	METHOD AND APPARATUS FOR CHARGING A BATTERY FROM A COMPLEX DIRECT CURRENT SOURCE
Cour,FR;	***H 02J 7/35*** ***H 02J 7/34*** ***G 05F 1/67***	EP 1938439*	METHOD AND APPARATUS FOR CHARGING A BATTERY FROM A COMPLEX DIRECT CURRENT SOURCE
Cour,FR;	***H 02J 7/35*** ***H 02J 7/34*** ***G 05F 1/67***	EP 1938439*	METHOD AND APPARATUS FOR CHARGING A BATTERY FROM A COMPLEX DIRECT CURRENT SOURCE
CV Therapeutics Inc., US	***A 61K 31/495*** ***A 61K 45/06*** ***A 61P 9/00*** ***A 61P 3/10*** ***A 61P 5/50***	EP 2139480*	RANOLAZINE FOR ENHANCING INSULIN SECRETION
CV THERAPEUTICS, US	***C 07D 491/04*** ***A 61K 31/4741*** ***A 61P 9/10***	EP 2125825*	ABCA1 ELEVATING COMPOUNDS
Cytokinetics, US	***A 61K 31/513*** ***C 07C 229/60*** ***C 07C 237/22*** ***C 07C 255/57*** ***C 07C 271/22*** ***C 07D 213/73*** ***C 07D 233/58*** ***C 07D 233/61*** ***C 07D 233/90*** ***C 07D 413/06*** ***C 07D 471/04*** ***C 07D 498/04***	EP 1942899*	MITOTIC KINESIN INHIBITORS
Cytokinetics, US	***A 01N 43/16*** ***A 61K 31/35***	EP 1956908*	CERTAIN COMPOSITIONS AND METHODS OF TREATMENT
Dabur Pharma Limited, IN	***C 07D 311/30***	EP 2185533*	QUERCETIN DERIVATIVES AS ANTI-CANCER AGENTS

(71)	(51)	Број објаве европске пријаве патента	(54)
De La Rue International Limited, GB	***B 41M 3/14*** ***B 42D 15/00*** ***B 42D 15/10***	EP 2262646*	SUBSTRATE FOR SECURITY DOCUMENT
Delphi Technologies Holding S.à.r.l., LU	***F 02M 59/06*** ***F 02M 59/10*** ***F 04B 53/00*** ***F 04B 53/08*** ***F 04B 53/18***	EP 2113653	Fluid Pump
Dr. August Wolff GmbH & Co. KG Arzneimittel, DE	***A 61K 8/44*** ***A 61Q 19/08***	EP 1952797	Use of a cosmetic composition comprising NMDA receptor agonists for cosmetic skin treatment
Dreamtouch, FR	***A 61H 37/00*** ***A 61H 7/00***	EP 2164443*	Massage device
Drizen,CA;	***A 61K 31/5575*** ***A 61P 15/12*** ***A 61P 15/10*** ***A 61K 9/06*** ***A 61K 47/38*** ***A 61K 47/14*** ***A 61K 47/10***	EP 1824494*	TOPICAL DRUG DELIVERY SYSTEM
DSM IP Assets B.V., NL	***C 12N 9/62*** ***C 12C 5/00***	EP 2010654*	PROLINE-SPECIFIC PROTEASES FREE FROM AMYLOLYTIC ACTIVITIES
Elan Pharma International Limited, IE	***A 61K 31/4427*** ***A 61K 9/14*** ***A 61P 9/12***	EP 1931340*	NANOPARTICULATE AZELNIDIPINE FORMULATIONS
Eli Lilly & Company, US	***A 61K 31/435*** ***A 61K 31/44*** ***A 61K 9/20*** ***A 61K 9/28*** ***A 61K 9/48***	EP 2101767*	AN ARTICLE COMPRISING PRASUGREL
Eloyalty Corporation, US	***G 10L 15/18*** ***G 10L 15/26*** ***H 04M 3/51***	EP 1889253*	A METHOD AND SYSTEM FOR ANALYZING SEPARATED VOICE DATA OF A TELEPHONIC COMMUNICATION BETWEEN A CUSTOMER AND A CONTACT CENTER BY APPLYING A PSYCHOLOGICAL BEHAVIORAL MODEL THERETO
EPIC Oil Extractors, US	***B 01D 11/02*** ***B 01J 3/02*** ***B 01J 8/00*** ***C 11B 1/10***	EP 1835974*	METHOD AND APPARATUS FOR REMOVING SOLUTE FROM A SOLID SOLUTE-BEARING PRODUCT
Euro-Pro Operating, US	F 16L 37/40	EP 1697676*	STEAM STOP FOR STEAM CLEANER
Euro-Pro Operating, US	A 47L 9/12 A 47L 9/16	EP 1742558*	LIGHT WEIGHT BAGLESS VACUUM CLEANER
Euroscreen S.A., BE	***C 07D 211/58*** ***C 07D 401/12*** ***C 07D 409/12*** ***C 07D 413/12*** ***C 07D 417/12*** ***A 61K 31/445*** ***A 61K 31/4523*** ***A 61K 31/4535*** ***A 61K 31/454*** ***A 61K 31/4545*** ***A 61P 11/00*** ***A 61P 17/00*** ***A 61P 19/00*** ***A 61P 29/00***	EP 2173715*	USE OF PIPERIDINE DERIVATIVES AS AGONISTS OF CHEMOKINE RECEPTOR ACTIVITY

(71)	(51)	Број објаве европске пријаве патента	(54)
Fang, CN	***H 04N 5/74***	EP 2007139	VIDEO INFORMATION APPARATUS AND IMAGE PROCESSING METHOD
Fasgen,US;	A 61K 35/00 A 61K 38/00 A 61P 9/10	EP 1734973*	NOVEL METHOD OF NEUROPROTECTION BY PHARMACOLOGICAL INHIBITION OF AMP-ACTIVATED PROTEIN KINASE
FCC,US;	***G 01N 21/00*** ***G 01N 21/75***	EP 1952121*	SYSTEM AND METHOD FOR READING A TEST STRIP
Feldmann, US	***C 12N 15/29*** ***C 12N 15/09*** ***C 12N 15/10***	EP 1971686*	NUCLEOTIDE SEQUENCES AND CORRESPONDING POLYPEPTIDES CONFERRING IMPROVED NITROGEN USE EFFICIENCY CHARACTERISTICS IN PLANTS
Fisch, US	***A 61N 1/00***	EP 2195077*	TREATMENT OF MIGRAINE HEADACHES USING ANTIESTROGENS
FOSECO INTERNATIONAL LIMITED, GB	***B 22D 41/18***	EP 1877213*	TUNDISH STOPPER ROD FOR CONTINUOUS MOLTEN METAL CASTING
FOX CHASE CANCER CENTER, US	A 61N 5/00 A 61N 1/00	EP 1690323*	METHOD OF MODULATING LASER-ACCELERATED PROTONS FOR RADIATION THERAPY
FSI Acquisition Sub, US	***A 61F 2/46*** ***A 61F 2/44***	EP 1928366*	IMPLANTABLE ORTHOPEDIC DEVICE COMPONENT SELECTION INSTRUMENT AND METHODS
Galzenati, IT	***A 47K 13/10***	EP 1879489*	DEVICE FOR RAISING AND LOWERING WATER CLOSET SEATS AND COVERS
Genentech, US	***C 07K 16/28*** ***A 61P 35/00*** ***A 61P 37/00*** ***A 61K 39/395***	EP 1851249*	CD20 ANTIBODY VARIANTS AND USES THEREOF
Genentech, US	***C 07K 16/30*** ***C 12N 5/24*** ***A 61K 39/395*** ***G 01N 33/574*** ***A 61P 35/00***	EP 1910419*	COMPOSITIONS AND METHODS FOR THE DIAGNOSIS AND TREATMENT OF TUMOR
Genentech, US	***C 07K 16/28*** ***G 01N 33/564*** ***G 01N 33/569*** ***G 01N 33/574*** ***G 01N 33/68***	EP 1984404*	METHODS AND COMPOSITIONS FOR TARGETING RELT
Genentech, US	***G 01N 33/68*** ***G 01N 33/564***	WO 2009076359	MODULATORS OF NEURONAL REGENERATION
Genentech,US;	***A 01K 67/027*** ***C 12N 15/85*** ***G 01N 33/00***	EP 1871163*	TRANSGENIC MODELS FOR DIFFERENT GENES AND THEIR USE FOR GENE CHARACTERIZATION
GENERAL INSTRUMENT CORPORATION, US	***H 04K 1/00*** ***H 04L 9/08*** ***H 04L 9/00*** ***G 06F 21/00*** ***H 04N 7/24*** ***H 04N 7/167***	EP 1834437*	METHOD AND APPARATUS FOR PROVIDING A SECURE MOVE OF A DECRYPTION CONTENT KEY
Genmab A/S, DK	***C 07K 16/28*** ***A 61K 47/48***	EP 2152751*	FUSION OR LINKED PROTEINS WITH EXTENDED HALF LIFE
Gentili,IT;	***A 47K 13/10***	EP 1879489*	DEVICE FOR RAISING AND LOWERING WATER CLOSET SEATS AND COVERS

(71)	(51)	Број објаве европске пријаве патента	(54)
GENZYME CORPORATION, US	***C 08G 73/02***	EP 2016114*	AMINE CONDENSATION POLYMERS AS PHOSPHATE SEQUESTRANTS
Georgia-Pacific Consumer Products LP, US	***A 47K 10/38***	EP 1656869	Tissue roll dispenser
Global Dental Impression Trays, US	***A 61C 9/00***	EP 1998707*	DENTAL IMPRESSION TRAY AND METHOD
Gollnast System-Anlagen GmbH, DE	E 06B 9/86	EP 1584782	Method, locking system and locking mechanism to automatically lock a roller shutter
GOVERNMENT OF THE UNITED STATES OF AMERICA, US	***C 07K 16/00*** ***C 07K 16/10*** ***A 61P 31/18***	EP 1807450*	METHOD OF SELECTION OF ANTI HIV-1-gp41 NEUTRALIZING HUMAN MONOCLONAL ANTIBODIES
Grab Networks, US	***G 06Q 99/00*** ***H 04K 1/00*** ***H 04L 9/00***	EP 1839259*	A SYSTEM AND METHOD OF PROCESSING ENTITLEMENT RULES, OFFERING AND DELIVERING DIGITAL CONTENT
Grindeks, LV	***A 61K 31/205*** ***A 61P 9/10***	EP 2067473	Medical use of 3-(2,2,2-trimethylhydrazinium) propionate salts
Guerra, CA	***A 61K 31/5575*** ***A 61P 15/12*** ***A 61P 15/10*** ***A 61K 9/06*** ***A 61K 47/38*** ***A 61K 47/14*** ***A 61K 47/10***	EP 1824494*	TOPICAL DRUG DELIVERY SYSTEM
H. Lundbeck A/S, DK	A 61K 9/14 A 61K 31/34 A 61P 25/24	EP 1732514*	CRYSTALLINE COMPOSITION CONTAINING ESCITALOPRAM OXALATE
H. Lundbeck A/S, DK	***A 61K 31/343*** ***A 61P 25/28*** ***A 61P 25/16*** ***A 61P 25/22*** ***A 61P 25/24*** ***A 61P 25/30***	EP 2026793*	USE OF ESCITALOPRAM FOR IMPROVING COGNITION
Halstead, GB	A 47B 91/02	EP 1732413*	POSITION ADJUSTMENT APPARATUS
Heaton a.s., CZ	***A 61K 31/201*** ***A 61K 31/202*** ***A 61K 31/337*** ***A 61K 31/355*** ***A 61P 35/00***	EP 1986630*	A TAXANE DERIVATIVE CONTAINING PHARMACEUTICAL COMPOSITION WITH IMPROVED THERAPEUTIC EFFICACY
Hiss, DE	***B 67B 1/04*** ***B 65D 39/00***	EP 1853509*	BOTTLE CLOSURE
Horus Vision, US	F 41G 1/00	EP 1690060*	APPARATUS AND METHOD FOR CALCULATING AIMING POINT INFORMATION
Hutchinson, US	***G 01N 21/00*** ***G 01N 21/75***	EP 1952121*	SYSTEM AND METHOD FOR READING A TEST STRIP
HYBRIDON,US;	A 61K 39/00 A 61K 39/21	EP 1729802*	ENHANCED ACTIVITY OF HIV VACCINE USING A SECOND GENERATION IMMUNOMODULATORY OLIGONUCLEOTIDE
Icagen, US	***A 01N 55/00*** ***A 61K 31/695*** ***A 61K 31/65*** ***A 61P 9/12*** ***A 61P 3/10*** ***A 61P 19/02*** ***A 61P 25/02***	EP 1968563*	TREATMENT METHODS USING TRIARYL METHANE COMPOUNDS

(71)	(51)	Број објаве европске пријаве патента	(54)
Impreg Holding ApS, DK	***F 16L 55/165***	EP 1948990*	FLEXIBLE INSERT TUBE FOR THE LINING OF PIPELINES AND OF DUCTS, IN PARTICULAR OF SEWERS
InBev S.A., BE	***C 12C 5/02***	EP 2004793*	TEA-FLAVORED BEER
Ind-Swift Laboratories Limited, IN	***A 61K 31/425***	EP 2012781*	PROCESS FOR THE PREPARATION OF POLYMORPHIC FORMS OF CLOPIDOGREL HYDROGEN SULFATE
InfaCare Pharmaceutical Corporation, US	***A 61K 31/555*** ***A 61K 9/08*** ***A 61P 1/16***	EP 1865777*	STANNSOPORFIN COMPOSITIONS AND ADMINISTRATION
Infinity Discovery, US	***A 61K 31/33*** ***A 61P 35/00***	EP 1906950*	ANSAMYCIN FORMULATIONS AND METHODS OF USE THEREOF
Inotek Pharmaceuticals Corporation, US	A 61B 5/055 A 61B 10/00 C 07B 47/00 A 61K 31/555 A 61K 31/40 C 07D 487/22 C 07F 13/00 C 07F 15/02	EP 1740094*	PYRIDYL-SUBSTITUTED PORPHYRIN COMPOUNDS AND METHODS OF USE THEREOF
Inoutic / Deceuninck GmbH, DE	***E 06B 9/17***	EP 1736631	Roller shutter box
Institut Curie, FR	***A 61N 5/10*** ***A 61B 19/00***	EP 1924324*	METHOD AND APPARATUS FOR APPLYING RADIOTHERAPY
Institut National Polytechnique de Lorraine, FR	***C 07K 17/10*** ***C 07K 17/04*** ***C 07K 1/04*** ***C 08J 3/075*** ***C 08L 1/28*** ***C 08L 5/00*** ***C 08L 5/04*** ***C 08L 5/06*** ***C 08L 5/08*** ***C 08L 5/12*** ***C 08L 89/00***	EP 1919956*	GELATION OF UNDENATURED PROTEINS WITH POLYSACCHARIDES
Institute of Physiologically active compunds of, RU	***C 07D 471/08*** ***A 61K 31/444*** ***A 61P 25/28***	EP 2088149	PHARMACOLOGICALLY ACTIVE N,N'-SUBSTITUTED 3,7-DIAZABICYCLO [3.3.1]NONANES, PHARMACEUTICAL COMPOSITIONS BASED THEREON AND A METHOD FOR THE USE THEREOF
Intersnack Knabber-Gebäck GmbH & Co. KG, DE	B 65D 25/36 B 65D 77/04 B 65D 1/36	EP 1584569	Packaging tray with outer cover
Janssen Pharmaceutica N.V., BE	***C 07D 417/12*** ***C 07D 419/12*** ***C 07C 311/21*** ***A 61K 31/18*** ***A 61K 31/445*** ***A 61P 1/00***	EP 1797083*	SULFONAMIDE COMPOUNDS
Janssen Pharmaceutica N.V., BE	***A 61K 31/4545*** ***A 61P 29/00*** ***C 07D 211/26*** ***C 07D 211/96*** ***C 07D 405/14*** ***C 07D 409/14*** ***C 07D 413/14***	EP 1983986*	PIPERIDINE DERIVATIVES AS CXCR3 RECEPTOR ANTAGONISTS

(71)	(51)	Број објаве европске пријаве патента	(54)
Janssen Pharmaceutica NV, BE	A 61K 38/18 A 61P 7/06	EP 1737484*	COMBINATION DOSING REGIMEN FOR ERYTHROPOIETIN
Janssen Pharmaceutica NV, BE	***C 07D 249/12*** ***A 61K 31/4196*** ***A 61P 25/00*** ***C 07D 257/04*** ***A 61K 31/41*** ***C 07D 233/70*** ***A 61K 31/4166*** ***C 07D 403/10*** ***C 07D 401/04*** ***C 07D 401/06*** ***C 07D 401/10*** ***C 07D 405/14*** ***C 07D 401/14***	EP 1831185*	TRIAZOLONE, TETRAZOLONE AND IMIDAZOLONE DERIVATIVES FOR USE AS ALPHA-2C ADRENORECEPTOR ANTAGONISTS
Janssen Pharmaceutica NV, BE	***C 07D 213/89*** ***C 07D 241/10*** ***C 07D 239/24*** ***C 07D 215/60*** ***A 61K 31/444*** ***A 61P 7/02***	EP 1879864*	FLUORINATED PYRIDINE N-OXIDE THROMBIN MODULATORS AND PROCESS FOR N-OXIDATION OF NITROGEN CONTAINING HETEROARYLS
Janssen Pharmaceutica NV, BE	***C 07D 487/04*** ***C 07D 209/94*** ***C 07D 491/04*** ***C 07D 333/80*** ***C 07D 311/94*** ***C 07D 221/18*** ***C 07D 307/93*** ***A 61K 31/403*** ***A 61K 31/407*** ***A 61P 25/00***	EP 1891073*	NOVEL SUBSTITUTED TETRACYCLIC TETRAHYDROFURAN, PYRROLIDINE AND TETRAHYDROTHIOPHENE DERIVATIVES AND THEIR USE AS A MEDICAMENT
Janssen Pharmaceutica NV, BE	***A 61K 31/4709***	EP 1901745*	SYNERGISTIC MODULATION OF FLT3 KINASE USING AMINOPYRIMIDINES KINASE MODULATORS AND A FARNESYL TRANSFERASE INHIBITOR
Janssen Pharmaceutica NV, BE	***C 07D 513/04*** ***A 61K 31/519*** ***A 61P 29/00***	EP 2044086*	THIAZOLOPYRIMIDINE MODULATORS OF TRPV1
Japan Tobacco, JP	***C 07D 231/40*** ***A 61K 31/41*** ***A 61K 31/415*** ***A 61K 31/4155*** ***A 61K 31/4184*** ***A 61K 31/4192*** ***A 61K 31/4196*** ***A 61K 31/422*** ***A 61K 31/4245*** ***A 61K 31/427*** ***A 61K 31/428*** ***A 61P 3/06***	EP 1884513	PYRAZOLE COMPOUND AND THERAPEUTIC AGENT FOR DIABETES COMPRISING THE SAME
JOHNS HOPKINS UNIVERSITY, US	A 61K 35/00 A 61K 38/00 A 61P 9/10	EP 1734973*	NOVEL METHOD OF NEUROPROTECTION BY PHARMACOLOGICAL INHIBITION OF AMP-ACTIVATED PROTEIN KINASE
Københavns Universitet, DK	***C 07K 14/71*** ***A 61K 38/04***	EP 2049568*	ERBB RECEPTOR-DERIVED PEPTIDE FRAGMENTS
KAO CORPORATION,ES;	***C 08L 95/00*** ***C 08K 3/34*** ***C 08L 93/04***	EP 1721938	Emulsifier for bituminous binders

(71)	(51)	Број објаве европске пријаве патента	(54)
KARO BIO AB, SE	A 61K 31/191 A 61K 31/18 C 07D 307/02 C 07D 311/14 C 07D 311/10 C 07D 311/08 C 07D 235/02 C 12Q 1/68 G 01N 33/78	EP 1732532*	NOVEL PHARMACEUTICAL COMPOSITIONS COMPRISING AGONISTS OF THE THYROID RECEPTOR
Kowa Co., JP	***A 61K 31/50*** ***A 61K 31/192*** ***A 61K 31/415*** ***A 61K 31/426*** ***A 61P 29/00*** ***A 61P 43/00*** ***C 07D 237/14***	EP 1864663	PREVENTIVE AND/OR THERAPEUTIC AGENT FOR RHEUMATOID ARTHRITIS
KRKA, SI	***C 07D 495/04*** ***A 61K 31/5513*** ***A 61P 25/18***	EP 1781665*	OLANZAPINE SALTS AND THEIR CONVERSION TO OLANZAPINE FREE BASE
KRKA, SI	***C 07D 401/12*** ***A 61K 31/4439*** ***A 61P 1/04***	EP 1963306*	ESOMEPRAZOLE ARGININE
KRKA, SI	***A 61K 9/00*** ***A 61K 9/20*** ***A 61K 31/445*** ***C 07D 211/32***	EP 2039349	Solid pharmaceutical composition comprising donepezil hydrochloride
Kufner Textil GmbH, DE	***D 04B 21/14*** ***A 41D 27/06***	EP 2115197*	ELASTIC INSERT, METHOD FOR THE PRODUCTION THEREOF AND USE
Laboratory Corporation of America Holdings, US	***C 12Q 1/68***	EP 1999274*	METHODS AND SYSTEMS FOR EVALUATING HEALTH RISK FACTORS BY MEASUREMENT OF DNA DAMAGE AND DNA REPAIR
L'AIR LIQUIDE, FR	***F 16K 11/07***	EP 1802901*	FLUID DISTRIBUTION AND REGULATION VALVE AND SYSTEM FOR SUPPLYING GAS DERIVED FROM TWO SOURCES COMPRISING SAME
Lantheus Medical Imaging, US	A 61K 51/04 A 61K 49/00 C 07D 307/58 C 07D 311/70 C 07D 311/58 C 07C 50/30 C 07D 311/22 A 61K 101/02	EP 1740225*	CONTRAST AGENTS FOR MYOCARDIAL PERFUSION IMAGING
Laursen, DK	***F 21V 1/00*** ***F 21V 11/00*** ***F 21W 121/00***	EP 2088363	A lamp shade made of a spiral coil spring
Les Laboratoires Servier, FR	***C 07C 233/18*** ***C 07C 231/24*** ***A 61K 31/165*** ***A 61P 25/00*** ***A 61P 37/00*** ***A 61P 15/08*** ***A 61P 9/00*** ***A 61P 3/00***	EP 2008993	New crystalline form III of agomelatine, method of preparing same and pharmaceutical compositions containing same

(71)	(51)	Број објаве европске пријаве патента	(54)
Les Laboratoires Servier,FR;	***C 07D 471/22*** ***A 61K 31/551*** ***A 61P 25/00***	EP 2102209*	NOVEL TRIAZABENZO[A]NAPHTHO[2,1,8-cde]AZULENE DERIVATIVES, METHOD FOR PREPARING THE SAME AND PHARMACEUTICAL COMPOSITIONS CONTAINING THE SAME
Lexicon Pharmaceuticals, US	***A 01K 67/027*** ***C 12N 15/85*** ***G 01N 33/00***	EP 1871163*	TRANSGENIC MODELS FOR DIFFERENT GENES AND THEIR USE FOR GENE CHARACTERIZATION
Lexicon Pharmaceuticals, US	***C 12N 15/85***	EP 2109680*	NOVEL GENE DISRUPTIONS, COMPOSITIONS AND METHODS RELATING THERETO
Life Sciences Research Partners VZW, BE	***C 07K 16/28*** ***C 07K 16/46*** ***C 12N 15/13*** ***C 12N 5/20*** ***A 61K 39/395*** ***A 61P 7/00***	EP 2160411*	ANTI-VPAC1 ANTIBODIES AND THEIR USES
Lintec Corporation, JP	***A 61N 1/36*** ***A 61N 1/04*** ***A 61N 1/05***	EP 1911490	SLEEP DISORDER TREATING DEVICE AND SLEEP DISORDER TREATING METHOD
Lipopeptide AB, SE	***C 07K 14/47*** ***C 07K 16/18*** ***C 12N 15/11*** ***A 61K 38/17*** ***G 01N 33/53*** ***C 12Q 1/68***	EP 1846444*	AGENTS INHIBITING THE CATHELIN-LIKE PROTEIN CAP18/LL-37
Lipopeptide AB, SE	***A 61K 38/17*** ***A 61P 35/00***	EP 2032152*	USE CATHELICIDIN ANTIMICROBIAL PROTEIN (HCAP18) AS ANTICANCER AGENT
Live Cargo, US	***G 06F 17/00***	EP 1999634*	SYSTEMS AND METHODS FOR DOCUMENT ANNOTATION
LLC Centre Competence "Basalt", UA	***C 03B 5/26*** ***C 03B 37/08***	EP 2004559*	PRODUCTION PROCESS FOR CONTINUOUS MINERAL FIBRES
Locus Pharmaceuticals, US	***A 01N 43/58*** ***A 01N 43/64*** ***A 01N 43/90***	EP 1973408*	INHIBITORS OF PROTEIN KINASES
Loyalty Acquisition Sub, US	***G 06Q 20/00***	EP 1848549*	METHOD AND DEVICE FOR DISPENSING AND PURCHASING CUSTOMIZED GIFT CARDS
Maremico, SI	***A 47G 9/10***	EP 2130461	Pillow with hardness and height adjustment
Martin, US	***B 29C 65/00*** ***E 04F 15/16***	EP 2040907*	INSTALLATION METHOD FOR NON-SLIP SANITARY FLOORING
Martinswerk GmbH, DE	***C 01F 7/02*** ***C 01F 7/18*** ***C 08K 3/22*** ***C 09K 21/02***	EP 2029484*	THERMALLY STABLE ALUMINUM TRIHYDROXIDE PARTICLES PRODUCED BY SPRAY DRYING WITH SUBSEQUENT DRY-MILLING AND THEIR USE
Marty,FR;	***H 02J 7/35*** ***H 02J 7/34*** ***G 05F 1/67***	EP 1938439*	METHOD AND APPARATUS FOR CHARGING A BATTERY FROM A COMPLEX DIRECT CURRENT SOURCE
Mattes & Ammann GmbH & Co. KG, DE	***B 32B 5/18*** ***B 32B 27/12*** ***B 60N 2/58*** ***B 61D 33/00***	EP 1859929	Composite sheet made of a soft elastic foam plastic sheet and a knitted fabric sheet

(71)	(51)	Број објаве европске пријаве патента	(54)
MedPointe Healthcare Inc., US	***C 07D 413/00*** ***C 07D 317/00*** ***C 07D 241/00*** ***C 07D 333/02***	EP 1888570*	METHODS FOR SYNTHESIS OF DICARBAMATE COMPOUNDS AND INTERMEDIATES IN THE FORMATION THEREOF
MERCER STAINLESS LIMITED,NZ;	***A 01J 25/12*** ***A 23C 19/06***	EP 1773111*	METHOD AND APPARATUS FOR PRODUCTING BLOCKS OF CHEESE
Merial Ltd., US	G 06F 19/00 G 06F 17/00 G 01N 33/48 A 61B 5/00	EP 1745391*	SYTEMS AND METHODS FOR IMPROVING LIVESTOCK PRODUCTION
Merz Pharma GmbH & Co. KGaA, DE	***A 61K 31/13*** ***A 61P 27/02*** ***A 61P 27/10***	EP 2162124*	NERAMEXANE FOR THE TREATMENT OF NYSTAGMUS
Micromet AG, DE	***C 07K 16/46***	EP 1960435*	DOMAIN-GRAFTED ANTIBODIES
Minipan S.r.l., IT	***A 21C 3/02***	EP 1683421	Mechanism for preparing puff pastry conveyed on a belt
Monsanto Technology, US	***C 07F 9/38***	EP 1877414*	ALTERING THE CRYSTAL SIZE DISTRIBUTION OF N-(PHOSPHONOMETHYL) IMINODIACETIC ACID FOR IMPROVED FILTRATION AND PRODUCT QUALITY
Motif Biosciences, US	***C 12Q 1/68*** ***G 06Q 50/00***	EP 1957675*	SYSTEMS AND METHODS FOR THE BIOMETRIC ANALYSIS OF INDEX FOUNDER POPULATIONS
Motif Biosciences, US	***G 06F 19/00***	EP 2100246*	BIOMETRIC ANALYSIS OF POPULATIONS DEFINED BY HOMOZYGOUS MARKER TRACK LENGTH
Mount Sinai School of Medicine, US	***A 61K 38/00***	EP 1863513*	POTENT AND SPECIFIC IMMUNOPROTEASOME INHIBITORS
Multiple Sclerosis Research Center Of New York, US	***G 01N 33/53***	EP 2064547*	FETUIN-A AS A BIOMARKER FOR MULTIPLE SCLEROSIS
Mura, IT	***H 04Q 1/14***	EP 1875745*	DEVICE FOR INTERCEPTION, IN THE TELEPHONE CENTRAL OFFICES, OF THE EXISTING METALLIC PAIRS
MURRAY GOULBURN CO-OPERATIVE CO LIMITED,AU;	***A 01J 25/12*** ***A 23C 19/06***	EP 1773111*	METHOD AND APPARATUS FOR PRODUCTING BLOCKS OF CHEESE
MYRIAD GENETICS, US	***A 61K 31/13***	EP 1909777*	HIGH DRUG LOAD FORMULATIONS AND DOSAGE FORMS
Nadzan,US;	***C 12N 15/29*** ***C 12N 15/09*** ***C 12N 15/10***	EP 1971686*	NUCLEOTIDE SEQUENCES AND CORRESPONDING POLYPEPTIDES CONFERRING IMPROVED NITROGEN USE EFFICIENCY CHARACTERISTICS IN PLANTS
National University Corporation,JP;	***A 61K 31/553*** ***A 61P 3/06*** ***A 61P 17/00***	EP 1889632	REMEDY FOR XANTHOMA
Nektar Therapeutics, US	A 61K 47/48 A 61P 35/00 A 61P 43/00	EP 1737496*	NOVEL G-CSF CONJUGATES
Noble Advanced Technologies, US	***H 05B 3/00*** ***C 21D 1/40***	EP 2000004*	METHOD AND APPARATUS FOR THE UNIFORM RESISTANCE HEATING OF ARTICLES
Novartis AG, CH	***C 12N 15/11*** ***A 61K 31/713***	EP 2171059*	RNAI INHIBITION OF ALPHA-ENAC EXPRESSION

(71)	(51)	Број објаве европске пријаве патента	(54)
Novartis AG,CH;	A 61K 9/20 A 61K 31/55 C 07D 223/00 A 61P 25/18 A 61P 25/24	EP 1729737*	DISINTEGRATING TABLETS COMPRISING LICARBAZEPINE
Novartis Forschungsstiftung, CH	***A 61K 38/17*** ***C 07K 14/78*** ***C 07K 16/30***	EP 2241323	Tenascin-W and brain cancers
Novartis Pharma GmbH, AT	A 61K 9/20 A 61K 31/55 C 07D 223/00 A 61P 25/18 A 61P 25/24	EP 1729737*	DISINTEGRATING TABLETS COMPRISING LICARBAZEPINE
Nuon Therapeutics Pty Limited, AU	***A 61K 31/196*** ***A 61P 25/04*** ***A 61P 29/00***	EP 1885351*	METHODS AND COMPOSITIONS FOR THE TREATMENT OF PAIN
NXP B.V., NL	***G 06K 11/00*** ***G 01R 17/10*** ***G 01R 33/09*** ***G 01D 5/16*** ***G 06F 3/033***	EP 1797438*	SENSOR
NXP B.V., NL	***G 06F 12/02***	EP 1846828*	DATA PROCESSING SYSTEM AND METHOD FOR MEMORY DEFRAGMENTATION
NXP B.V., NL	***H 01L 21/336***	EP 1972005*	METHOD OF MANUFACTURING A SEMICONDUCTOR DEVICE AND SEMICONDUCTOR DEVICE OBTAINED WITH SUCH A METHOD
NXP B.V., NL	***H 04N 9/04***	EP 2002663*	METHOD AND ARRANGEMENT FOR GENERATING A COLOR VIDEO SIGNAL
NXP B.V., NL	***G 11C 16/04*** ***G 11C 16/10***	EP 2024978*	SONOS MEMORY DEVICE AND METHOD OF OPERATING A SONOS MEMORY DEVICE
NXP B.V., NL	***H 01L 23/528***	EP 2038927*	POWER SUPPLY NETWORK
NXP B.V., NL	***G 01R 31/3187***	EP 2145196*	IC TESTING METHODS AND APPARATUS
Nycomed GmbH, DE	***C 07D 471/10*** ***A 61K 31/438*** ***A 61P 1/04***	EP 1899338*	SPIRO-BENZIMIDAZOLES AS INHIBITORS OF GASTRIC ACID SECRETION
Nycomed GmbH, DE	***C 07D 235/08*** ***C 07F 7/08*** ***C 07D 401/06*** ***C 07D 409/06*** ***C 07D 491/04*** ***A 61K 31/4188*** ***A 61P 1/00***	EP 1904454*	PROCESS FOR THE PRODUCTION OF INTERMADIATES FOR THE PREPARATION OF TRICYCLIC BENZIMIDAZOLES
Olympia Tools International, US	***B 26B 5/00***	EP 2113346	Retractable utility knife
Panasonic Corporation, JP	H 04L 12/56	EP 1703680	COMMUNICATION SYSTEM, MOBILE TERMINAL AND ACCESS ROUTER
Panasonic Corporation, JP	***A 61B 8/08***	EP 1806099	ULTRASONOGRAPHIC DEVICE AND ULTRASONOGRAPHIC DEVICE CONTROL METHOD
PERSEE MEDICA, FR	***B 05B 1/30*** ***B 05B 1/02*** ***B 65D 83/16*** ***B 05B 12/02***	EP 1874481*	DEVICE FOR APPLYING A FLUID TO AN AREA TO BE TREATED, COMPRISING A TIMING SYSTEM

(71)	(51)	Број објаве европске пријаве патента	(54)
Pfizer Products Inc., US	***C 07D 261/08*** ***C 07D 413/08*** ***C 07D 413/12*** ***C 07D 417/08*** ***C 07D 413/14***	EP 1966170*	ESTROGEN MODULATORS
Phoslock Technologies Pty Ltd, AU	C 02F 11/00 C 02F 1/58 C 02F 1/68 C 02F 1/42 B 09C 1/08 E 01H 12/00 E 01H 15/00 C 01B 33/38 C 01B 33/40	EP 1740507*	IMPROVED MODIFIED SUBSTRATE FOR REMOVING AQUEOUS OXYANIONS
PHYTOPHARM PLC, GB	C 07J 71/00 A 61K 31/58 A 61P 19/10 A 61P 25/28	EP 1742960*	CRYSTALLINE AND AMORPHOUS FORMS OF SMILAGENIN
PHYTOPHARM PLC, GB	***C 07J 71/00*** ***A 61K 31/58*** ***A 61P 3/04*** ***A 61P 25/28***	EP 1809650*	POLYMORPHS OF SARSAPOGENIN
PLASTI-MAX SpA, IT	***G 02C 11/00***	EP 1852729	Anti-theft device for eyeglasses
Plastipak Packaging Inc., US	***B 32B 1/00*** ***B 32B 1/02*** ***B 32B 1/08*** ***B 65D 1/40*** ***B 65D 23/10***	EP 1831006*	PLASTIC ARTICLE
Pomagalski, FR	***B 61B 12/02***	EP 1980465	Mechanical device for guiding an overhead cable of a mechanical ski lift and method of using same
PROSIDION LTD, GB	***A 61K 31/165*** ***A 61K 31/17*** ***C 07C 237/24*** ***C 07C 275/42*** ***A 61P 3/04*** ***A 61K 31/41*** ***A 61K 31/435*** ***C 07D 207/08*** ***C 07D 207/16*** ***C 07D 207/34*** ***C 07D 209/42*** ***C 07D 213/72*** ***C 07D 213/81*** ***C 07D 213/82*** ***C 07D 215/04***	EP 2120911*	AMIDE AND UREA DERIVATIVES FOR THE TREATMENT OF METABOLIC DISEASES
Protiva Biotherapeutics Inc., CA	***C 07H 21/02*** ***A 61K 48/00*** ***A 61K 31/713*** ***A 61K 31/7105*** ***C 12N 15/88***	EP 1773857*	IMMUNOSTIMULATORY SIRNA MOLECULES AND USES THEREFOR

(71)	(51)	Број објаве европске пријаве патента	(54)
Ranbaxy Laboratories Limited, IN	***C 07H 9/04*** ***C 07H 15/00*** ***C 07H 3/02*** ***A 61K 31/70*** ***A 61K 31/7004*** ***A 61K 31/7028*** ***A 61K 31/7042*** ***A 61P 37/00*** ***A 61P 35/00*** ***A 61P 17/00*** ***A 61P 11/06***	EP 1874788*	MONOSACCHARIDE DERIVATIVES AS ANTI-INFLAMMATORY AND/OR ANTI-CANCER AGENTS
Ranbaxy Laboratories Limited, IN	***A 61K 31/4166*** ***C 07D 211/70*** ***C 07D 213/30*** ***C 07D 233/60*** ***C 07D 233/58*** ***A 61K 31/4402*** ***A 61K 31/4406*** ***A 61K 31/4409*** ***A 61P 11/00*** ***A 61P 13/00***	EP 2076261*	MUSCARINIC RECEPTOR ANTAGONISTS
Ranbaxy Laboratories Limited, IN	***C 07F 9/655*** ***A 61K 31/506*** ***C 07D 411/04*** ***A 61P 31/18***	EP 2227478*	PROCESS AND INTERMEDIATES FOR THE PREPARATION OF SUBSTITUTED 1, 3-OXATHIOLANES, ESPECIALLY LAMIVUDINE
Ratiopharm GmbH, DE	***A 61K 9/20*** ***A 61K 31/55***	EP 2146699*	PHARMACEUTICAL COMPOSITIONS COMPRISING OXCARBAZEPINE
Reemtsma Cigarettenfabriken GmbH, DE	***A 24D 1/02*** ***B 31F 1/07*** ***B 41M 3/10*** ***A 24C 5/00***	EP 2143345	Cigarette paper
Renovar, US	***A 61K 35/12*** ***C 12Q 1/68*** ***G 01N 33/53***	EP 1993573*	SYSTEMS AND METHODS FOR MONITORING IMMUNE RESPONSES AND PREDICTING OUTCOMES IN TRANSPLANT RECIPIENTS
RESEARCH IN MOTION LIMITED, CA	***H 03M 7/02*** ***H 03M 7/14***	EP 1696572	Method and apparatus for data encoding
RESEARCH IN MOTION LIMITED, CA	G 06F 9/44 G 06F 3/14 H 04Q 7/32	EP 1774430*	USER INTERFACE GENERATION WITH PARAMETRIC IMAGE DIVISION
RESEARCH IN MOTION LIMITED, CA	***H 04Q 7/38***	EP 1804539	Apparatus, and associated method, for facilitating formation of a call connection in a radio communication system with a service center identified by a short dialing code
RESEARCH IN MOTION LIMITED, CA	***G 06F 3/00***	EP 1857912	Tactile feedback system and method for a mobile communication device having a trackball
RESEARCH IN MOTION LIMITED, CA	***G 06F 9/44*** ***G 06F 15/02*** ***H 04Q 7/32***	EP 1872207*	SYSTEM AND METHOD OF PRESENTING ENTITIES OF STANDARD DEVICE APPLICATIONS IN WIRELESS DEVICES
RESEARCH IN MOTION LIMITED, CA	***G 06F 17/00*** ***H 04Q 7/22*** ***H 04B 7/26*** ***G 06F 9/44*** ***G 06F 9/455***	EP 1872254*	SYSTEM AND METHOD OF REPRESENTING DATA ENTITIES OF STANDARD DEVICE APPLICATIONS AS BUILT-IN COMPONENTS

(71)	(51)	Број објаве европске пријаве патента	(54)
RESEARCH IN MOTION LIMITED, CA	***H 04M 1/725*** ***G 06F 3/023*** ***G 06F 9/44***	EP 1921836	Handheld electronic device having selectable language indicator for language selection and method therefor
RESEARCH IN MOTION LIMITED, CA	***G 06F 9/44***	EP 1978441	System and method for updating reference to a data-source in a component-based application
Research In Motion Limited, CA	***G 06F 9/44***	EP 1990715	System, apparatus and method for programming a computing device
RESEARCH IN MOTION LIMITED, CA	***H 04L 12/66***	EP 2003832	System and method for creating multi-mode applications
RESEARCH IN MOTION LIMITED, CA	***H 04M 1/60*** ***H 04M 1/725*** ***H 04M 1/247*** ***H 03G 5/02***	EP 2031847	Method and apparatus allowing for user-selectable acoustic equalizer settings for voice calls
RESEARCH IN MOTION LIMITED, CA	***G 06F 3/044***	EP 2085861	Electronic device and touch screen display
RESEARCH IN MOTION LIMITED, CA	***G 06F 17/30***	EP 2096562	Enhanced browser navigation
RESEARCH IN MOTION LIMITED, CA	***G 01S 11/10*** ***H 04M 1/725***	EP 2103956	Estimation of the speed of a mobile device
RESEARCH IN MOTION LIMITED, CA	***G 06F 3/048***	EP 2133781	System and method for providing tactile feedback to a user of an electronic device
Rheinische Friedrich-Wilhelms-Universität Bonn, DE	***A 61K 31/44*** ***C 07D 471/14***	EP 1976519*	CYTISINE AND ACETYLCHOLINE ANALOGS AND METHODS OF TREATING MOOD DISORDERS
Richter Gedeon Nyrt., HU	***C 07D 417/12***	EP 2013203*	Process for the preparation of 5-(2-bromoethyl)-6-chloro-1,3-dihydro-2H-indol-2-one
Rodlen Laboratories, US	A 61K 31/5415 A 01N 25/00 A 01N 27/00 A 01N 43/00 A 01N 43/02 A 01N 43/46 A 61K 31/015 A 61K 31/553 A 61K 31/554 A 61K 31/335 A 61K 31/55	EP 1711054*	METHOD AND COMPOSITIONS FOR TREATMENT OF PAINFUL DISORDERS
Sanochemia Pharmazeutika AG, AT	A 61K 9/127	EP 1737426*	CHOLINESTERASE INHIBITORS IN LIPOSOMES AND THEIR PRODUCTION AND USE
Sanochemia Pharmazeutika Aktiengesellschaft, AT	A 61K 31/4453 A 61P 25/02 A 61K 9/22 A 61K 9/26 A 61K 47/32 A 61K 9/28	EP 1737455*	CONTROLLED RELEASE PHARMACEUTICAL COMPOSITION OF TOLPERISONE FOR ORAL ADMINISTRATION
Schering Corporation, US	***A 61P 35/00*** ***A 61K 31/4743*** ***C 07D 495/04***	EP 1863571*	COMPOUNDS FOR INHIBITING KSP KINESIN ACTIVITY
Schering Corporation, US	***C 07K 14/435***	EP 1899368*	INTERFERON-IGG FUSION

(71)	(51)	Број објаве европске пријаве патента	(54)
Schering Corporation, US	***C 07D 239/94*** ***C 07D 401/04*** ***C 07D 403/04*** ***C 07D 401/12*** ***C 07D 403/12*** ***C 07D 405/12*** ***C 07D 409/12*** ***C 07D 413/12*** ***C 07D 417/12*** ***A 61K 31/495***	EP 1924568*	QUINAZOLINE DERIVATIVES USEFUL IN CANCER TREATMENT
Schering Corporation, US	***A 61K 31/397*** ***A 61K 31/445*** ***A 61P 3/06*** ***A 61P 3/10***	EP 1962835*	TREATMENT OF NONALCOHOLIC FATTY LIVER DISEASE USING CHOLESTEROL LOWERING AGENTS AND/OR H3 RECEPTOR ANTAGONIST/INVERSE AGONIST
Schering Corporation, US	***A 61K 38/06*** ***A 61K 38/07*** ***A 61K 38/08*** ***A 61K 45/06*** ***A 61P 31/14***	EP 1981524*	COMBINATIONS COMPRISING HCV PROTEASE INHIBITOR(S) AND HCV POLYMERASE INHIBITOR(S), AND METHODS OF TREATMENT RELATED THERETO
Schering Corporation, US	***A 61K 31/4525*** ***A 61P 7/00***	EP 2001471*	USE OF COMBINATION PREPARATIONS CONTAINING THROMBIN RECEPTOR ANTAGONISTS FOR TREATING CARDIOVASCULAR DISORDERS
Schering Corporation, US	***A 61K 31/45*** ***A 61K 31/454*** ***A 61K 31/4545*** ***A 61P 35/00***	EP 2037919*	METHOD OF USING SUBSTITUTED PIPERIDINES THAT INCREASE P53 ACTIVITY
Schering Corporation, US	***A 61J 1/03***	EP 2097057*	PHARMACEUTICAL PACKAGING SYSTEMS FOR IMPROVED PATIENT COMPLIANCE
Schering Corporation, US	***A 61K 45/06*** ***A 61P 35/00*** ***A 61K 31/337*** ***A 61K 31/4365*** ***A 61K 31/506*** ***A 61K 31/517*** ***A 61K 31/519***	EP 2182986*	ANTI-MITOTIC AGENT AND AURORA KINASE INHIBITOR COMBINATION AS ANTI-CANCER TREATMENT
Schering Corporation, US	***C 07K 5/06*** ***A 61P 31/22***	EP 2209796*	MACROCYCLIC INHIBITORS OF HEPATITIS C VIRUS NS3 SERINE PROTEASE
Schneeberger,US;	***C 12N 15/29*** ***C 12N 15/09*** ***C 12N 15/10***	EP 1971686*	NUCLEOTIDE SEQUENCES AND CORRESPONDING POLYPEPTIDES CONFERRING IMPROVED NITROGEN USE EFFICIENCY CHARACTERISTICS IN PLANTS
Secretary of State, GB	***A 22B 3/00*** ***A 61D 7/04***	EP 1996026*	ANIMAL ASPHYXIATION DEVICE
Sicor Biotech UAB, LT	***C 07K 14/535***	EP 1837346	Method for purifying granulocyte-colony stimulating factor
SIGMA-TAU, IT	***C 07K 14/705*** ***C 07K 14/715*** ***C 07K 5/078*** ***C 07K 5/02*** ***C 07K 7/02*** ***A 61K 38/04***	EP 1828246*	MYD88 HOMODIMERIZATION INHIBITORS

(71)	(51)	Број објаве европске пријаве патента	(54)
Signal Pharmaceuticals LLC, US	***G 01N 21/75*** ***G 01N 21/76*** ***G 01N 33/53*** ***G 01N 33/532*** ***G 01N 33/573***	EP 1810008*	P27 UBIQUITINATION ASSAY AND METHODS OF USE
SOULIMANI, IT	A 61K 8/92 A 61K 8/97 A 61K 8/98 A 61Q 5/00 A 61Q 7/00	EP 1778181*	COSMETIC MIXTURE FOR HAIR
Spirit2go GmbH, DE	F 16B 2/14 F 16B 5/06 F 16B 21/09 F 16B 21/16 B 25B 31/00	EP 1718875*	CONNECTING UNIT
Staktek Group, US	H 01L 23/02	EP 1741134*	STACKED MODULE SYSTEMS AND METHODS
Stepframe Media, US	***H 04N 5/92*** ***H 04N 5/445*** ***H 04N 5/45*** ***G 11B 27/00*** ***G 11B 27/10*** ***G 11B 27/34***	EP 2106661*	SYSTEMS AND METHODS FOR PRODUCTION, DELIVERY, RECORDING, AND VIEWING OF VIDEO AND SIMILAR CONTENT PRIMARILY INTENDED TO BE VIEWED IN STEP-FRAME/FRAME-ADVANCE MODE
Sunesis Pharmaceuticals, US	***A 61K 31/4745*** ***A 61P 35/00***	EP 2043645*	COMPOUNDS AND COMPOSITIONS FOR TREATMENT OF CANCER
Synta Pharmaceuticals Corporation, US	C 07D 231/12 C 07D 231/14 A 61K 31/415 C 07D 235/10 C 07D 409/04 A 61P 29/00	EP 1732900*	ACRYLONITRILE DERIVATIVES FOR INFLAMMATION AND IMMUNE-RELATED USES
Synta Pharmaceuticals Corporation, US	***A 61K 31/16*** ***A 61K 31/165*** ***A 61P 37/04***	EP 1871350*	METHODS OF INCREASING NATURAL KILLER CELL ACTIVITY FOR THERAPY
Synta Pharmaceuticals Corporation, US	***C 07D 241/00*** ***C 07D 241/02*** ***A 61K 31/497***	EP 2001476*	BENZOIMIDAZOLYL-PARAZINE COMPOUNDS FOR INFLAMMATION AND IMMUNE-RELATED USES
Synta Pharmaceuticals Corporation, US	***C 07D 401/04*** ***A 61K 31/4439*** ***A 61P 37/00***	EP 2004626*	BENZIMIDAZOLYL-PYRIDINE COMPOUNDS FOR INFLAMMATION AND IMMUNE-RELATED USES
Synta Pharmaceuticals Corporation, US	***A 61K 31/16*** ***A 61K 31/165*** ***A 61K 31/337*** ***A 61K 45/06*** ***A 61P 35/00*** ***A 61P 17/00***	EP 2061451*	BIS(THIOHYDRAZIDE AMIDES) FOR TREATING MELANOMA
Synthes GmbH, CH	A 61B 17/56 A 61F 5/00 A 61F 2/44	EP 1740109*	ROD PERSUADER
Takeda Pharmaceutical Company Limited, JP	***A 61K 31/343*** ***A 61K 31/519*** ***A 61K 45/06*** ***A 61P 25/20*** ***A 61K 31/4535***	EP 1832286	PREVENTIVE OR THERAPEUTIC AGENT FOR SLEEP DISORDER

(71)	(51)	Број објаве европске пријаве патента	(54)
Takeda Pharmaceutical Company Limited, JP	***C 07D 213/55*** ***C 07D 213/56*** ***C 07D 401/12*** ***C 07D 413/12*** ***C 07D 405/12*** ***C 07D 409/12*** ***C 07D 417/12*** ***C 07D 401/14*** ***A 61P 3/08*** ***A 61K 31/44*** ***A 61K 31/4427***	EP 1851202*	PYRIDYL ACETIC ACID COMPOUNDS
Takeda Pharmaceutical Company Limited, JP	***C 07D 307/77*** ***A 61K 31/343*** ***A 61K 31/13*** ***A 61K 31/165*** ***A 61K 31/445*** ***A 61K 31/473*** ***A 61K 31/55*** ***A 61K 45/00*** ***A 61P 25/20*** ***A 61P 25/28*** ***A 61P 43/00***	EP 1867642	AGENT FOR PREVENTION OR TREATMENT OF NOCTURNAL BEHAVIORAL DISORDER ASSOCIATED WITH DEMENTIA
Takeda Pharmaceutical Company Limited, JP	***A 61K 31/553*** ***A 61P 3/06*** ***A 61P 17/00***	EP 1889632	REMEDY FOR XANTHOMA
Takeda Pharmaceutical Company Limited, JP	***A 61K 31/366*** ***A 61K 31/397*** ***A 61K 31/40*** ***A 61K 31/553*** ***A 61K 45/06*** ***A 61P 1/16*** ***A 61P 3/06***	EP 1962832*	COMBINATIONS OF A QUALENE SYNTHASE INHIBITOR AND A HMG-COA REDUCTASE INHIBITOR FOR TREATING HYPERLIPIDEMIA
TDW DELAWARE, US	G 01N 27/72 G 01N 27/82 G 01R 33/12 G 01N 27/87 F 16L 55/26	EP 1735612*	ID-OD DISCRIMINATION SENSOR CONCEPT FOR A MAGNETIC FLUX LEAKAGE INSPECTION TOOL
Tech View A/S, DK Tengion, US	***G 09F 15/00*** ***A 01N 1/00*** ***A 01N 1/02***	EP 1866898* EP 1988769*	A COUNTER BIOREACTOR FOR ORGAN RECONSTRUCTION AND AUGMENTATION
Terraelast AG, DE	***E 01C 5/22*** ***E 02D 29/14*** ***E 03F 5/06*** ***E 01F 9/04***	EP 1885955*	STRUCTURAL UNIT
Terraelast AG, DE	***E 01C 7/30*** ***E 01C 7/32*** ***E 01C 7/08***	EP 1893812*	CARRIAGEWAY AND SURFACE FOR CARRIAGEWAYS
Tethys Bioscience, US	***G 01N 33/74***	EP 2030025*	MARKERS ASSOCIATED WITH ARTERIOVASCULAR EVENTS AND METHODS OF USE THEREOF
TETRA PAK TEBEL BV, NL	***A 01J 25/12*** ***A 23C 19/06***	EP 1773111*	METHOD AND APPARATUS FOR PRODUCTING BLOCKS OF CHEESE
Teva Pharmaceutical Industries Ltd., IL	***A 61K 9/20*** ***A 61K 9/50*** ***A 61K 31/00*** ***A 61K 31/4439*** ***A 61K 31/64***	EP 2190417*	PHARMACEUTICAL COMPOSITIONS COMPRISING INSULIN SENSITIZER AND INSULIN SECRETAGOGUE
THE BOARD OF TRUSTEES OF, US	***A 61K 38/08*** ***A 61P 9/10*** ***C 07K 7/06***	EP 1846016*	METHODS OF INCREASING CEREBRAL BLOOD FLOW

(71)	(51)	Број објаве европске пријаве патента	(54)
The Board of Trustees of, US	***C 12Q 1/68***	EP 2079852*	SNP DETECTION AND OTHER METHODS FOR CHARACTERIZING AND TREATING BIPOLAR DISORDER AND OTHER AILMENTS
THE IMMUNE RESPONSE CORPORATION, US	A 61K 39/00 A 61K 39/21	EP 1729802*	ENHANCED ACTIVITY OF HIV VACCINE USING A SECOND GENERATION IMMUNOMODULATORY OLIGONUCLEOTIDE
The Mount Sinai School of Medicine of New York, US	A 61K 31/74 A 61P 3/00	EP 1691819*	CHAPERONE-BASED THERAPY FOR NIEMANN-PICK DISEASE
The Regents of the University of California, US	***A 61K 39/00*** ***A 61K 45/00*** ***C 12N 5/00*** ***G 01N 33/53*** ***A 01K 67/00*** ***C 07H 21/04*** ***C 12N 15/00***	EP 1993597*	HUMAN TELOMERASE REVERSE TRANSCRIPTASE PEPTIDES
The Regents of The University of California,US;	A 61K 31/125 C 07C 337/00	EP 1734939*	ANTI-PARASITIC COMPOUNDS AND METHODS OF THEIR USE
THE REGENTS OF THE UNIVERSITY OF MICHIGAN, US	C 12Q 1/48 C 12Q 1/02 C 12Q 1/00 A 61K 31/00 A 61K 31/352 A 61K 31/436 A 61K 31/7004 A 61K 31/7056 A 61P 9/00 A 61P 35/00	EP 1692305*	DIAGNOSIS AND TREATMENT OF DISEASES ARISING FROM DEFECTS IN THE TUBEROUS SCLEROSIS PATHWAY
The Research Foundation of State University of New, US	***C 12N 5/00*** ***C 12N 5/02*** ***C 12N 5/08*** ***A 01N 63/00*** ***A 01N 65/00***	EP 1805297*	THE USE OF HUMAN STEM CELLS AND/OR FACTORS THEY PRODUCE TO PROMOTE ADULT MAMMALIAN CARDIAC REPAIR THROUGH CARDIOMYOCYTE CELL DIVISION
The Trustees of Columbia University in the City of, US	A 01N 63/00 A 01N 65/00 A 61K 35/60 A 61F 2/00	EP 1744794*	POLYMER-CERAMIC-HYDROGEL COMPOSITE SCAFFOLD FOR OSTEOCHONDRAL REPAIR
The Trustees of Columbia University in the City of,US;	***C 12N 5/00*** ***C 12N 5/02*** ***C 12N 5/08*** ***A 01N 63/00*** ***A 01N 65/00***	EP 1805297*	THE USE OF HUMAN STEM CELLS AND/OR FACTORS THEY PRODUCE TO PROMOTE ADULT MAMMALIAN CARDIAC REPAIR THROUGH CARDIOMYOCYTE CELL DIVISION
The Trustees of The University of Pennsylvania, US	***A 61K 31/135*** ***C 07C 217/80*** ***C 07F 13/00***	EP 1841465*	STILBENE DERIVATIVES AND THEIR USE FOR BINDING AND IMAGING AMYLOID PLAQUES
The Trustees of the University of Pennsylvania, US	***A 61K 38/00*** ***A 61K 39/00*** ***A 61K 39/38*** ***G 01N 33/53*** ***C 12N 5/06*** ***C 07K 16/00*** ***C 07H 21/04***	EP 2056849*	METHODS AND COMPOSITIONS FOR TREATING IGE-MEDIATED DISEASES
The University of North Carolina at Chapel Hill,US;	***A 61K 38/00***	EP 1863513*	POTENT AND SPECIFIC IMMUNOPROTEASOME INHIBITORS

(71)	(51)	Број објаве европске пријаве патента	(54)
ThromboGenics N.V.,BE;	***C 07K 16/28*** ***C 07K 16/46*** ***C 12N 15/13*** ***C 12N 5/20*** ***A 61K 39/395*** ***A 61P 7/00***	EP 2160411*	ANTI-VPAC1 ANTIBODIES AND THEIR USES
Tisatec GmbH, DE	***A 01C 23/04*** ***B 01F 5/04***	EP 1690442	Dosing unit for soil amendment or fertilizer products
TOLSA S.A., ES	***C 08L 95/00*** ***C 08K 3/34*** ***C 08L 93/04***	EP 1721938	Emulsifier for bituminous binders
TouchDiva Corp. Ltd., CN	***H 04L 29/06***	EP 2180653	System and method for providing media content on demand via a network
TRELLISWARE TECHNOLOGIES, US	***H 03M 13/11***	EP 1900105*	CLASH-FREE IRREGULAR-REPEAT-ACCUMULATE CODE
Trott, AU	***B 25G 1/00*** ***B 25G 1/10*** ***A 01B 1/02***	EP 2091696*	AUXILIARY HANDLE FOR A TOOL
Tuff Torq Corporation, US	***F 16D 41/10***	EP 1707837	Bi-directional overrunning clutch for a transaxle
Tuff Torq Corporation, US	***F 16H 48/16*** ***B 60K 17/35*** ***B 60K 23/06***	EP 1967764	Central differential for a working vehicle
UCB Pharma S.A.,BE;	***C 07K 14/51*** ***A 61K 38/10*** ***A 61K 38/17***	EP 1891100*	SCLEROSTIN EPITOPES
UCB Pharma, BE	***C 07K 16/00*** ***C 07K 16/28*** ***C 12N 15/72***	EP 1940878*	EXPRESSION CONTROL USING ANTIBODY EXPRESSION OPTIMISATION SEQUENCES
UFI Filters S.p.A., IT	***B 01D 24/24*** ***B 01D 46/52***	EP 1957175*	FILTERING SYSTEM FOR THE AIR DIRECTED TOWARDS AN INTERNAL COMBUSTION ENGINE INTAKE
UNIMED PHARMACEUTICALS, US	***A 61K 31/352*** ***A 61K 9/12*** ***A 61K 9/72***	EP 1855666*	DRONABINOL COMPOSITIONS AND METHODS OF USING SAME
Universidad Autónoma de Madrid, ES	***C 12N 5/06***	EP 1812558*	IDENTIFICATION AND ISOLATION OF MULTIPOTENT CELLS FROM NON-OSTEOCHONDRAL MESENCHYMAL TISSUE
Universität Zürich,CH;	***C 07D 313/12*** ***C 07F 9/54*** ***A 61K 31/335*** ***A 61P 37/00***	EP 2004621*	POLYMORPHIC FORMS OF OLOPATADINE HYDROCHLORIDE AND METHODS FOR PRODUCING OLOPATADINE AND SALTS THEREOF
Université de Paris-Sud, FR	***C 07D 471/22*** ***A 61K 31/551*** ***A 61P 25/00***	EP 2102209*	NOVEL TRIAZABENZO[A]NAPHTHO[2,1,8-cde]AZULENE DERIVATIVES, METHOD FOR PREPARING THE SAME AND PHARMACEUTICAL COMPOSITIONS CONTAINING THE SAME
University of Cape Town, ZA	A 61K 31/125 C 07C 337/00	EP 1734939*	ANTI-PARASITIC COMPOUNDS AND METHODS OF THEIR USE
UNIVERSITY OF VIRGINIA PATENT FOUNDATION, US	***A 61P 35/00*** ***A 61K 31/00***	EP 1827606*	ARYL AMIDE SPHINGOSINE 1-PHOSPHATE ANALOGS
Validation Clearing Bureau (proprietary) limited, ZA	***G 06Q 40/00***	EP 1844433*	INVOICE FINANCING
Ventana Medical Systems, US	C 12Q 1/68	EP 1753876*	INTERNAL CONTROL IN SITU HYBRIDIZATION

(71)	(51)	Број објаве европске пријаве патента	(54)
Viamet Pharmaceuticals, US	***A 61K 47/48***	EP 2035042*	METALLO-HYDROLASE INHIBITORS USING METAL BINDING MOIETIES IN COMBINATION WITH TARGETING MOIETIES
WatchGuard Technologies, US	***H 04L 9/00*** ***H 04L 12/54***	EP 1989816*	METHOD AND SYSTEM FOR DETECTING UNDESIRED EMAIL CONTAINING IMAGE-BASED MESSAGES
WatchGuard Technologies, US	***H 04L 12/24***	EP 2027677*	EMAIL SERVER SYSTEM AND METHOD
Wind Concepts Limited, IE	***H 02K 21/24***	EP 2064803*	AN ALTERNATOR
Wyeth LLC, US	A 61K 9/00	EP 1720519*	LYOPHILIZATION METHOD TO IMPROVE EXCIPIENT CRYSTALLIZATION
Xenith, US	***F 41H 1/08*** ***A 42B 3/12*** ***B 29C 33/48*** ***B 29C 45/00*** ***B 29C 45/44*** ***B 29C 65/04***	EP 2146177	Method of making a protective structure
Yale University, US	***C 07K 14/475*** ***C 07K 14/705*** ***A 61K 38/00***	EP 1805209*	NOGO-A POLYPEPTIDE FRAGMENTS, VARIANT NOGO RECEPTOR-1 POLYPEPTIDES, AND USES THEREOF
Yale University,US;	***A 61K 31/44*** ***C 07D 471/14***	EP 1976519*	CYTISINE AND ACETYLCHOLINE ANALOGS AND METHODS OF TREATING MOOD DISORDERS

ИНДЕКС ОБЈАВЉЕНИХ ПОВУЧЕНИХ ЗАХТЕВА ЗА ПРОШИРЕЊЕ ЕВРОПСКИХ ПРИЈАВА ПАТЕНАТА ПРЕМА КЛАСИФИКАЦИОНОЈ ОЗНАЦИ

(51)	Број објаве европске пријаве патента	(51)
A 01B 1/02	EP 2091696*	AUXILIARY HANDLE FOR A TOOL
A 01B 33/08	EP 2111734	Power harrow
A 01C 17/00	EP 2119335	Centrifugal spreader
A 01C 23/04	EP 1690442	Dosing unit for soil amendment or fertilizer products
A 01H 5/00	EP 1846560*	NOVEL OMEGA-3 FATTY ACID DESATURASE FAMILY MEMBERS AND USES THEREOF
A 01H 5/10	EP 1846560*	NOVEL OMEGA-3 FATTY ACID DESATURASE FAMILY MEMBERS AND USES THEREOF
A 01J 25/12	EP 1773111*	METHOD AND APPARATUS FOR PRODUCTING BLOCKS OF CHEESE
A 01K 67/00	EP 1993597*	HUMAN TELOMERASE REVERSE TRANSCRIPTASE PEPTIDES
A 01K 67/027	EP 1871163*	TRANSGENIC MODELS FOR DIFFERENT GENES AND THEIR USE FOR GENE CHARACTERIZATION
A 01N 1/00	EP 1988769*	BIOREACTOR FOR ORGAN RECONSTRUCTION AND AUGMENTATION
A 01N 1/02	EP 1988769*	BIOREACTOR FOR ORGAN RECONSTRUCTION AND AUGMENTATION
A 01N 25/00	EP 1711054*	METHOD AND COMPOSITIONS FOR TREATMENT OF PAINFUL DISORDERS
A 01N 25/00	EP 1871361*	PHOSPHOLIPID-BASED PHARMACEUTICAL FORMULATIONS AND METHODS FOR PRODUCING AND USING SAME
A 01N 27/00	EP 1711054*	METHOD AND COMPOSITIONS FOR TREATMENT OF PAINFUL DISORDERS
A 01N 37/36	EP 1993358*	METHOD OF INDUCING VIRUS TOLERANCE OF PLANTS
A 01N 37/50	EP 1993358*	METHOD OF INDUCING VIRUS TOLERANCE OF PLANTS
A 01N 43/00	EP 1711054*	METHOD AND COMPOSITIONS FOR TREATMENT OF PAINFUL DISORDERS
A 01N 43/02	EP 1711054*	METHOD AND COMPOSITIONS FOR TREATMENT OF PAINFUL DISORDERS
A 01N 43/16	EP 1956908*	CERTAIN COMPOSITIONS AND METHODS OF TREATMENT
A 01N 43/40	EP 2201951	Octenidine composition
A 01N 43/46	EP 1711054*	METHOD AND COMPOSITIONS FOR TREATMENT OF PAINFUL DISORDERS
A 01N 43/54	EP 1993358*	METHOD OF INDUCING VIRUS TOLERANCE OF PLANTS
A 01N 43/58	EP 1973408*	INHIBITORS OF PROTEIN KINASES
A 01N 43/64	EP 1973408*	INHIBITORS OF PROTEIN KINASES
A 01N 43/653	EP 1993358*	METHOD OF INDUCING VIRUS TOLERANCE OF PLANTS
A 01N 43/90	EP 1973408*	INHIBITORS OF PROTEIN KINASES
A 01N 47/24	EP 1993358*	METHOD OF INDUCING VIRUS TOLERANCE OF PLANTS
A 01N 47/38	EP 1725106*	METHOD FOR COMBATING WEEDS
A 01N 55/00	EP 1968563*	TREATMENT METHODS USING TRIARYL METHANE COMPOUNDS
A 01N 63/00	EP 1744794*	POLYMER-CERAMIC-HYDROGEL COMPOSITE SCAFFOLD FOR OSTEOCHONDRAL REPAIR
A 01N 63/00	EP 1805297*	THE USE OF HUMAN STEM CELLS AND/OR FACTORS THEY PRODUCE TO PROMOTE ADULT MAMMALIAN CARDIAC REPAIR THROUGH CARDIOMYOCYTE CELL DIVISION
A 01N 65/00	EP 1744794*	POLYMER-CERAMIC-HYDROGEL COMPOSITE SCAFFOLD FOR OSTEOCHONDRAL REPAIR
A 01N 65/00	EP 1805297*	THE USE OF HUMAN STEM CELLS AND/OR FACTORS THEY PRODUCE TO PROMOTE ADULT MAMMALIAN CARDIAC REPAIR THROUGH CARDIOMYOCYTE CELL DIVISION

(51)	Број објаве европске пријаве патента	(51)
A 21C 3/02	EP 1683421	Mechanism for preparing puff pastry conveyed on a belt
A 22B 3/00	EP 1996026*	ANIMAL ASPHYXIATION DEVICE
A 23C 19/06	EP 1773111*	METHOD AND APPARATUS FOR PRODUCTING BLOCKS OF CHEESE
A 23L 1/01	EP 2145548	Method for holding and treating sausage meat in a container
A 23L 1/29	EP 2100897	Lecithin based composition and its use in food
A 23L 1/30	EP 2100897	Lecithin based composition and its use in food
A 23L 1/317	EP 2145548	Method for holding and treating sausage meat in a container
A 24C 5/00	EP 2143345	Cigarette paper
A 24D 1/02	EP 2143345	Cigarette paper
A 41D 27/06	EP 2115197*	ELASTIC INSERT, METHOD FOR THE PRODUCTION THEREOF AND USE
A 42B 3/12	EP 2146177	Method of making a protective structure
A 44C 27/00	EP 1737312*	METHOD FOR MANUFACTURING A YARN OF PRECIOUS METAL, APPARATUS, COMPOSITE YARN AND FRAME
A 47B 91/02	EP 1732413*	POSITION ADJUSTMENT APPARATUS
A 47G 9/10	EP 2130461	Pillow with hardness and height adjustment
A 47K 10/32	EP 2133104	Core for Rolls
A 47K 10/38	EP 1656869	Tissue roll dispenser
A 47K 13/10	EP 1879489*	DEVICE FOR RAISING AND LOWERING WATER CLOSET SEATS AND COVERS
A 47L 9/12	EP 1742558*	LIGHT WEIGHT BAGLESS VACUUM CLEANER
A 47L 9/16	EP 1742558*	LIGHT WEIGHT BAGLESS VACUUM CLEANER
A 61B 5/00	EP 1745391*	SYTEMS AND METHODS FOR IMPROVING LIVESTOCK PRODUCTION
A 61B 5/055	EP 1740094*	PYRIDYL-SUBSTITUTED PORPHYRIN COMPOUNDS AND METHODS OF USE THEREOF
A 61B 8/08	EP 1806099	ULTRASONOGRAPHIC DEVICE AND ULTRASONOGRAPHIC DEVICE CONTROL METHOD
A 61B 10/00	EP 1740094*	PYRIDYL-SUBSTITUTED PORPHYRIN COMPOUNDS AND METHODS OF USE THEREOF
A 61B 17/56	EP 1740109*	ROD PERSUADER
A 61B 19/00	EP 1924324*	METHOD AND APPARATUS FOR APPLYING RADIOTHERAPY
A 61C 9/00	EP 1998707*	DENTAL IMPRESSION TRAY AND METHOD
A 61D 7/04	EP 1996026*	ANIMAL ASPHYXIATION DEVICE
A 61F 2/00	EP 1744794*	POLYMER-CERAMIC-HYDROGEL COMPOSITE SCAFFOLD FOR OSTEOCHONDRAL REPAIR
A 61F 2/44	EP 1740109*	ROD PERSUADER
A 61F 2/44	EP 1928366*	IMPLANTABLE ORTHOPEDIC DEVICE COMPONENT SELECTION INSTRUMENT AND METHODS
A 61F 2/46	EP 1928366*	IMPLANTABLE ORTHOPEDIC DEVICE COMPONENT SELECTION INSTRUMENT AND METHODS
A 61F 5/00	EP 1740109*	ROD PERSUADER
A 61H 7/00	EP 2164443*	Massage device
A 61H 37/00	EP 2164443*	Massage device
A 61J 1/03	EP 2097057*	PHARMACEUTICAL PACKAGING SYSTEMS FOR IMPROVED PATIENT COMPLIANCE
A 61K 8/04	EP 2100583	Foundation with particular organic light filter
A 61K 8/06	EP 2100583	Foundation with particular organic light filter
A 61K 8/34	EP 2201951	Octenidine composition
A 61K 8/40	EP 2100583	Foundation with particular organic light filter
A 61K 8/44	EP 1952797	Use of a cosmetic composition comprising NMDA receptor agonists for cosmetic skin treatment
A 61K 8/49	EP 2100583	Foundation with particular organic light filter
A 61K 8/49	EP 2201951	Octenidine composition
A 61K 8/60	EP 2201951	Octenidine composition
A 61K 8/891	EP 2100583	Foundation with particular organic light filter
A 61K 8/895	EP 2100583	Foundation with particular organic light filter
A 61K 8/92	EP 1778181*	COSMETIC MIXTURE FOR HAIR
A 61K 8/97	EP 1778181*	COSMETIC MIXTURE FOR HAIR

(51)	Број објаве европске пријаве патента	(51)
A 61K 8/98	EP 1778181*	COSMETIC MIXTURE FOR HAIR
A 61K 9/00	EP 1720519*	LYOPHILIZATION METHOD TO IMPROVE EXCIPIENT CRYSTALLIZATION
A 61K 9/00	EP 2039349	Solid pharmaceutical composition comprising donepezil hydrochloride
A 61K 9/00	EP 2165706	Treating Inflammatory Pain in Mucosa of the Oral Cavity Using Mucosal Prolonged Release Bioadhesive Therapeutic Carriers.
A 61K 9/06	EP 1824494*	TOPICAL DRUG DELIVERY SYSTEM
A 61K 9/08	EP 1865777*	STANNSOPORFIN COMPOSITIONS AND ADMINISTRATION
A 61K 9/12	EP 1715849*	STABLE PHARMACEUTICAL SOLUTION FORMULATION FOR PRESSURIZED METERED DOSE INHALERS
A 61K 9/12	EP 1855666*	DRONABINOL COMPOSITIONS AND METHODS OF USING SAME
A 61K 9/127	EP 1737426*	CHOLINESTERASE INHIBITORS IN LIPOSOMES AND THEIR PRODUCTION AND USE
A 61K 9/127	EP 2190411*	LIPOSOME COMPOSITIONS FOR IN VIVO ADMINISTRATION OF BORONIC ACID COMPOUNDS
A 61K 9/127	EP 2190412*	LIPOSOME FORMULATIONS OF BORONIC ACID COMPOUNDS
A 61K 9/14	EP 1732514*	CRYSTALLINE COMPOSITION CONTAINING ESCITALOPRAM OXALATE
A 61K 9/14	EP 1931340*	NANOPARTICULATE AZELNIDIPINE FORMULATIONS
A 61K 9/20	EP 1729737*	DISINTEGRATING TABLETS COMPRISING LICARBAZEPINE
A 61K 9/20	EP 2039349	Solid pharmaceutical composition comprising donepezil hydrochloride
A 61K 9/20	EP 2101767*	AN ARTICLE COMPRISING PRASUGREL
A 61K 9/20	EP 2146699*	PHARMACEUTICAL COMPOSITIONS COMPRISING OXCARBAZEPINE
A 61K 9/20	EP 2190417*	PHARMACEUTICAL COMPOSITIONS COMPRISING INSULIN SENSITIZER AND INSULIN SECRETAGOGUE
A 61K 9/22	EP 1737455*	CONTROLLED RELEASE PHARMACEUTICAL COMPOSITION OF TOLPERISONE FOR ORAL ADMINISTRATION
A 61K 9/26	EP 1737455*	CONTROLLED RELEASE PHARMACEUTICAL COMPOSITION OF TOLPERISONE FOR ORAL ADMINISTRATION
A 61K 9/28	EP 1737455*	CONTROLLED RELEASE PHARMACEUTICAL COMPOSITION OF TOLPERISONE FOR ORAL ADMINISTRATION
A 61K 9/28	EP 2101767*	AN ARTICLE COMPRISING PRASUGREL
A 61K 9/48	EP 2101767*	AN ARTICLE COMPRISING PRASUGREL
A 61K 9/50	EP 2190417*	PHARMACEUTICAL COMPOSITIONS COMPRISING INSULIN SENSITIZER AND INSULIN SECRETAGOGUE
A 61K 9/72	EP 1855666*	DRONABINOL COMPOSITIONS AND METHODS OF USING SAME
A 61K 31/00	EP 1692305*	DIAGNOSIS AND TREATMENT OF DISEASES ARISING FROM DEFECTS IN THE TUBEROUS SCLEROSIS PATHWAY
A 61K 31/00	EP 1827606*	ARYL AMIDE SPHINGOSINE 1-PHOSPHATE ANALOGS
A 61K 31/00	EP 2190417*	PHARMACEUTICAL COMPOSITIONS COMPRISING INSULIN SENSITIZER AND INSULIN SECRETAGOGUE
A 61K 31/015	EP 1711054*	METHOD AND COMPOSITIONS FOR TREATMENT OF PAINFUL DISORDERS
A 61K 31/125	EP 1734939*	ANTI-PARASITIC COMPOUNDS AND METHODS OF THEIR USE
A 61K 31/13	EP 1867642	AGENT FOR PREVENTION OR TREATMENT OF NOCTURNAL BEHAVIORAL DISORDER ASSOCIATED WITH DEMENTIA

(51)	Број објаве европске пријаве патента	(51)
A 61K 31/13	EP 1909777*	HIGH DRUG LOAD FORMULATIONS AND DOSAGE FORMS
A 61K 31/13	EP 2162124*	NERAMEXANE FOR THE TREATMENT OF NYSTAGMUS
A 61K 31/135	EP 1841465*	STILBENE DERIVATIVES AND THEIR USE FOR BINDING AND IMAGING AMYLOID PLAQUES
A 61K 31/16	EP 1871350*	METHODS OF INCREASING NATURAL KILLER CELL ACTIVITY FOR THERAPY
A 61K 31/16	EP 2061451*	BIS(THIOHYDRAZIDE AMIDES) FOR TREATING MELANOMA
A 61K 31/165	EP 1867642	AGENT FOR PREVENTION OR TREATMENT OF NOCTURNAL BEHAVIORAL DISORDER ASSOCIATED WITH DEMENTIA
A 61K 31/165	EP 1871350*	METHODS OF INCREASING NATURAL KILLER CELL ACTIVITY FOR THERAPY
A 61K 31/165	EP 2008993	New crystalline form III of agomelatine, method of preparing same and pharmaceutical compositions containing same
A 61K 31/165	EP 2061451*	BIS(THIOHYDRAZIDE AMIDES) FOR TREATING MELANOMA
A 61K 31/165	EP 2120911*	AMIDE AND UREA DERIVATIVES FOR THE TREATMENT OF METABOLIC DISEASES
A 61K 31/166	EP 2024359*	COMPOUNDS THAT ARE AGONISTS OF MUSCARINIC RECEPTORS AND THAT MAY BE EFFECTIVE IN TREATING PAIN, ALZHEIMER'S DECEASE AND/OR SCHIZOPHRENIA
A 61K 31/167	EP 2314567	Inhibitors of the microsomal prostaglandin E2 synthase-1
A 61K 31/17	EP 2120911*	AMIDE AND UREA DERIVATIVES FOR THE TREATMENT OF METABOLIC DISEASES
A 61K 31/18	EP 1732532*	NOVEL PHARMACEUTICAL COMPOSITIONS COMPRISING AGONISTS OF THE THYROID RECEPTOR
A 61K 31/18	EP 1797083*	SULFONAMIDE COMPOUNDS
A 61K 31/18	EP 1924554*	SULPHONAMIDE DERIVATIVES
A 61K 31/191	EP 1732532*	NOVEL PHARMACEUTICAL COMPOSITIONS COMPRISING AGONISTS OF THE THYROID RECEPTOR
A 61K 31/192	EP 1864663	PREVENTIVE AND/OR THERAPEUTIC AGENT FOR RHEUMATOID ARTHRITIS
A 61K 31/196	EP 1885351*	METHODS AND COMPOSITIONS FOR THE TREATMENT OF PAIN
A 61K 31/201	EP 1986630*	A TAXANE DERIVATIVE CONTAINING PHARMACEUTICAL COMPOSITION WITH IMPROVED THERAPEUTIC EFFICACY
A 61K 31/202	EP 1986630*	A TAXANE DERIVATIVE CONTAINING PHARMACEUTICAL COMPOSITION WITH IMPROVED THERAPEUTIC EFFICACY
A 61K 31/205	EP 2067473	Medical use of 3-(2,2,2-trimethylhydrazinium) propionate salts
A 61K 31/215	EP 1924554*	SULPHONAMIDE DERIVATIVES
A 61K 31/225	EP 1940382*	COMBINATION THERAPY WITH FUMARIC ACID ESTERS FOR THE TREATMENT OF AUTOIMMUNE AND/OR INFLAMMATORY DISORDERS
A 61K 31/27	EP 1924554*	SULPHONAMIDE DERIVATIVES
A 61K 31/277	EP 1924554*	SULPHONAMIDE DERIVATIVES
A 61K 31/28	EP 1812374*	NOVEL SALTS OF FUMARIC ACID MONOALKYLESTERS AND THEIR PHARMACEUTICAL USE
A 61K 31/33	EP 1906950*	ANSAMYCIN FORMULATIONS AND METHODS OF USE THEREOF
A 61K 31/335	EP 1711054*	METHOD AND COMPOSITIONS FOR TREATMENT OF PAINFUL DISORDERS
A 61K 31/335	EP 2004621*	POLYMORPHIC FORMS OF OLOPATADINE HYDROCHLORIDE AND METHODS FOR PRODUCING OLOPATADINE AND SALTS THEREOF

(51)	Број објаве европске пријаве патента	(51)
A 61K 31/337	EP 1986630*	A TAXANE DERIVATIVE CONTAINING PHARMACEUTICAL COMPOSITION WITH IMPROVED THERAPEUTIC EFFICACY
A 61K 31/337	EP 2061451*	BIS(THIOHYDRAZIDE AMIDES) FOR TREATING MELANOMA
A 61K 31/337	EP 2182986*	ANTI-MITOTIC AGENT AND AURORA KINASE INHIBITOR COMBINATION AS ANTI-CANCER TREATMENT
A 61K 31/34	EP 1732514*	CRYSTALLINE COMPOSITION CONTAINING ESCITALOPRAM OXALATE
A 61K 31/343	EP 1832286	PREVENTIVE OR THERAPEUTIC AGENT FOR SLEEP DISORDER
A 61K 31/343	EP 1867642	AGENT FOR PREVENTION OR TREATMENT OF NOCTURNAL BEHAVIORAL DISORDER ASSOCIATED WITH DEMENTIA
A 61K 31/343	EP 2026793*	USE OF ESCITALOPRAM FOR IMPROVING COGNITION
A 61K 31/35	EP 1956908*	CERTAIN COMPOSITIONS AND METHODS OF TREATMENT
A 61K 31/352	EP 1692305*	DIAGNOSIS AND TREATMENT OF DISEASES ARISING FROM DEFECTS IN THE TUBEROUS SCLEROSIS PATHWAY
A 61K 31/352	EP 1855666*	DRONABINOL COMPOSITIONS AND METHODS OF USING SAME
A 61K 31/355	EP 1986630*	A TAXANE DERIVATIVE CONTAINING PHARMACEUTICAL COMPOSITION WITH IMPROVED THERAPEUTIC EFFICACY
A 61K 31/366	EP 1962832*	COMBINATIONS OF A QUALENE SYNTHASE INHIBITOR AND A HMG-COA REDUCTASE INHIBITOR FOR TREATING HYPERLIPIDEMIA
A 61K 31/381	EP 2314567	Inhibitors of the microsomal prostaglandin E2 synthase-1
A 61K 31/397	EP 1871361*	PHOSPHOLIPID-BASED PHARMACEUTICAL FORMULATIONS AND METHODS FOR PRODUCING AND USING SAME
A 61K 31/397	EP 1962832*	COMBINATIONS OF A QUALENE SYNTHASE INHIBITOR AND A HMG-COA REDUCTASE INHIBITOR FOR TREATING HYPERLIPIDEMIA
A 61K 31/397	EP 1962835*	TREATMENT OF NONALCOHOLIC FATTY LIVER DISEASE USING CHOLESTEROL LOWERING AGENTS AND/OR H3 RECEPTOR ANTAGONIST/INVERSE AGONIST
A 61K 31/397	EP 2043631*	NEW INDICATIONS FOR DIRECT THROMBIN INHIBITORS IN THE CARDIOVASCULAR FIELD
A 61K 31/40	EP 1740094*	PYRIDYL-SUBSTITUTED PORPHYRIN COMPOUNDS AND METHODS OF USE THEREOF
A 61K 31/40	EP 1962832*	COMBINATIONS OF A QUALENE SYNTHASE INHIBITOR AND A HMG-COA REDUCTASE INHIBITOR FOR TREATING HYPERLIPIDEMIA
A 61K 31/401	EP 1924554*	SULPHONAMIDE DERIVATIVES
A 61K 31/403	EP 1891073*	NOVEL SUBSTITUTED TETRACYCLIC TETRAHYDROFURAN, PYRROLIDINE AND TETRAHYDROTHIOPHENE DERIVATIVES AND THEIR USE AS A MEDICAMENT
A 61K 31/404	EP 1844013*	INDOLES USEFUL IN THE TREATMENT OF INFLAMMATION
A 61K 31/407	EP 1891073*	NOVEL SUBSTITUTED TETRACYCLIC TETRAHYDROFURAN, PYRROLIDINE AND TETRAHYDROTHIOPHENE DERIVATIVES AND THEIR USE AS A MEDICAMENT
A 61K 31/41	EP 1831185*	TRIAZOLONE, TETRAZOLONE AND IMIDAZOLONE DERIVATIVES FOR USE AS ALPHA-2C ADRENORECEPTOR ANTAGONISTS
A 61K 31/41	EP 1884513	PYRAZOLE COMPOUND AND THERAPEUTIC AGENT FOR DIABETES COMPRISING THE SAME

(51)	Број објаве европске пријаве патента	(51)
A 61K 31/41	EP 2120911*	AMIDE AND UREA DERIVATIVES FOR THE TREATMENT OF METABOLIC DISEASES
A 61K 31/415	EP 1732900*	ACRYLONITRILE DERIVATIVES FOR INFLAMMATION AND IMMUNE-RELATED USES
A 61K 31/415	EP 1864663	PREVENTIVE AND/OR THERAPEUTIC AGENT FOR RHEUMATOID ARTHRITIS
A 61K 31/415	EP 1884513	PYRAZOLE COMPOUND AND THERAPEUTIC AGENT FOR DIABETES COMPRISING THE SAME
A 61K 31/415	EP 2048137	Benzamide derivatives and their use as glucokinase activating agents.
A 61K 31/415	EP 2165706	Treating Inflammatory Pain in Mucosa of the Oral Cavity Using Mucosal Prolonged Release Bioadhesive Therapeutic Carriers.
A 61K 31/4155	EP 1884513	PYRAZOLE COMPOUND AND THERAPEUTIC AGENT FOR DIABETES COMPRISING THE SAME
A 61K 31/416	EP 2029581*	P38 INHIBITORS AND METHODS OF USE THEREOF
A 61K 31/4166	EP 1831185*	TRIAZOLONE, TETRAZOLONE AND IMIDAZOLONE DERIVATIVES FOR USE AS ALPHA-2C ADRENORECEPTOR ANTAGONISTS
A 61K 31/4166	EP 1924554*	SULPHONAMIDE DERIVATIVES
A 61K 31/4166	EP 2076261*	MUSCARINIC RECEPTOR ANTAGONISTS
A 61K 31/417	EP 1924554*	SULPHONAMIDE DERIVATIVES
A 61K 31/4184	EP 1884513	PYRAZOLE COMPOUND AND THERAPEUTIC AGENT FOR DIABETES COMPRISING THE SAME
A 61K 31/4184	EP 2043631*	NEW INDICATIONS FOR DIRECT THROMBIN INHIBITORS IN THE CARDIOVASCULAR FIELD
A 61K 31/4188	EP 1904454*	PROCESS FOR THE PRODUCTION OF INTERMADIATES FOR THE PREPARATION OF TRICYCLIC BENZIMIDAZOLES
A 61K 31/4188	EP 1973914*	TRANSFORMING GROWTH FACTOR MODULATORS
A 61K 31/4192	EP 1884513	PYRAZOLE COMPOUND AND THERAPEUTIC AGENT FOR DIABETES COMPRISING THE SAME
A 61K 31/4196	EP 1831185*	TRIAZOLONE, TETRAZOLONE AND IMIDAZOLONE DERIVATIVES FOR USE AS ALPHA-2C ADRENORECEPTOR ANTAGONISTS
A 61K 31/4196	EP 1884513	PYRAZOLE COMPOUND AND THERAPEUTIC AGENT FOR DIABETES COMPRISING THE SAME
A 61K 31/42	EP 1924554*	SULPHONAMIDE DERIVATIVES
A 61K 31/421	EP 1924554*	SULPHONAMIDE DERIVATIVES
A 61K 31/422	EP 1884513	PYRAZOLE COMPOUND AND THERAPEUTIC AGENT FOR DIABETES COMPRISING THE SAME
A 61K 31/4245	EP 1884513	PYRAZOLE COMPOUND AND THERAPEUTIC AGENT FOR DIABETES COMPRISING THE SAME
A 61K 31/425	EP 1682128*	PROCESS AND FORMULATION CONTAINING EPOTHILONES AND ANALOGS THEREOF
A 61K 31/425	EP 1838686*	DERIVATIVES OF ISOTHIAZOL-3(2H)-ONE 1,1-DIOXIDES AS LIVER X RECEPTOR MODULATORS
A 61K 31/425	EP 2012781*	PROCESS FOR THE PREPARATION OF POLYMORPHIC FORMS OF CLOPIDOGREL HYDROGEN SULFATE
A 61K 31/426	EP 1864663	PREVENTIVE AND/OR THERAPEUTIC AGENT FOR RHEUMATOID ARTHRITIS
A 61K 31/426	EP 2048137	Benzamide derivatives and their use as glucokinase activating agents.
A 61K 31/427	EP 1838686*	DERIVATIVES OF ISOTHIAZOL-3(2H)-ONE 1,1-DIOXIDES AS LIVER X RECEPTOR MODULATORS
A 61K 31/427	EP 1858893*	1,3-THIAZOLE-5-CARBOXAMIDES USEFUL AS CANCER CHEMOTHERAPEUTIC AGENTS
A 61K 31/427	EP 1884513	PYRAZOLE COMPOUND AND THERAPEUTIC AGENT FOR DIABETES COMPRISING THE SAME
A 61K 31/427	EP 2048137	Benzamide derivatives and their use as glucokinase activating agents.

(51)	Број објаве европске пријаве патента	(51)
A 61K 31/428	EP 1884513	PYRAZOLE COMPOUND AND THERAPEUTIC AGENT FOR DIABETES COMPRISING THE SAME
A 61K 31/435	EP 2101767*	AN ARTICLE COMPRISING PRASUGREL
A 61K 31/435	EP 2120911*	AMIDE AND UREA DERIVATIVES FOR THE TREATMENT OF METABOLIC DISEASES
A 61K 31/436	EP 1692305*	DIAGNOSIS AND TREATMENT OF DISEASES ARISING FROM DEFECTS IN THE TUBEROUS SCLEROSIS PATHWAY
A 61K 31/4365	EP 1851229*	TETRAHYDROPYRIDOTHIOPHENES FOR THE TREATMENT OF PROLIFERATIVE DISEASES SUCH AS CANCER
A 61K 31/4365	EP 2182986*	ANTI-MITOTIC AGENT AND AURORA KINASE INHIBITOR COMBINATION AS ANTI-CANCER TREATMENT
A 61K 31/437	EP 1973914*	TRANSFORMING GROWTH FACTOR MODULATORS
A 61K 31/438	EP 1899338*	SPIRO-BENZIMIDAZOLES AS INHIBITORS OF GASTRIC ACID SECRETION
A 61K 31/438	EP 1973914*	TRANSFORMING GROWTH FACTOR MODULATORS
A 61K 31/44	EP 1851202*	PYRIDYL ACETIC ACID COMPOUNDS
A 61K 31/44	EP 1976519*	CYTISINE AND ACETYLCHOLINE ANALOGS AND METHODS OF TREATING MOOD DISORDERS
A 61K 31/44	EP 2101767*	AN ARTICLE COMPRISING PRASUGREL
A 61K 31/44	EP 2201951	Octenidine composition
A 61K 31/44	EP 2314567	Inhibitors of the microsomal prostaglandin E2 synthase-1
A 61K 31/4402	EP 2076261*	MUSCARINIC RECEPTOR ANTAGONISTS
A 61K 31/4406	EP 2076261*	MUSCARINIC RECEPTOR ANTAGONISTS
A 61K 31/4409	EP 1924554*	SULPHONAMIDE DERIVATIVES
A 61K 31/4409	EP 2076261*	MUSCARINIC RECEPTOR ANTAGONISTS
A 61K 31/4418	EP 1987005*	NEW PYRIDIN-3-AMINE DERIVATIVES
A 61K 31/4427	EP 1838686*	DERIVATIVES OF ISOTHIAZOL-3(2H)-ONE 1,1-DIOXIDES AS LIVER X RECEPTOR MODULATORS
A 61K 31/4427	EP 1851202*	PYRIDYL ACETIC ACID COMPOUNDS
A 61K 31/443	EP 1987005*	NEW PYRIDIN-3-AMINE DERIVATIVES
A 61K 31/4436	EP 1987005*	NEW PYRIDIN-3-AMINE DERIVATIVES
A 61K 31/4439	EP 1963306*	ESOMEPRAZOLE ARGININE
A 61K 31/4439	EP 2004626*	BENZIMIDAZOLYL-PYRIDINE COMPOUNDS FOR INFLAMMATION AND IMMUNE-RELATED USES
A 61K 31/4439	EP 2024359*	COMPOUNDS THAT ARE AGONISTS OF MUSCARINIC RECEPTORS AND THAT MAY BE EFFECTIVE IN TREATING PAIN, ALZHEIMER'S DECEASE AND/OR SCHIZOPHRENIA
A 61K 31/4439	EP 2043631*	NEW INDICATIONS FOR DIRECT THROMBIN INHIBITORS IN THE CARDIOVASCULAR FIELD
A 61K 31/4439	EP 2190417*	PHARMACEUTICAL COMPOSITIONS COMPRISING INSULIN SENSITIZER AND INSULIN SECRETAGOGUE
A 61K 31/444	EP 1879864*	FLUORINATED PYRIDINE N-OXIDE THROMBIN MODULATORS AND PROCESS FOR N-OXIDATION OF NITROGEN CONTAINING HETEROARYLS
A 61K 31/444	EP 2088149	PHARMACOLOGICALLY ACTIVE N,N'-SUBSTITUTED 3,7-DIAZABICYCLO [3.3.1]NONANES, PHARMACEUTICAL COMPOSITIONS BASED THEREON AND A METHOD FOR THE USE THEREOF
A 61K 31/445	EP 1797083*	SULFONAMIDE COMPOUNDS
A 61K 31/445	EP 1867642	AGENT FOR PREVENTION OR TREATMENT OF NOCTURNAL BEHAVIORAL DISORDER ASSOCIATED WITH DEMENTIA
A 61K 31/445	EP 1962835*	TREATMENT OF NONALCOHOLIC FATTY LIVER DISEASE USING CHOLESTEROL LOWERING AGENTS AND/OR H3 RECEPTOR ANTAGONIST/INVERSE AGONIST
A 61K 31/445	EP 2039349	Solid pharmaceutical composition comprising donepezil hydrochloride

(51)	Број објаве европске пријаве патента	(51)
A 61K 31/445	EP 2173715*	USE OF PIPERIDINE DERIVATIVES AS AGONISTS OF CHEMOKINE RECEPTOR ACTIVITY
A 61K 31/445	EP 2314567	Inhibitors of the microsomal prostaglandin E2 synthase-1
A 61K 31/4453	EP 1737455*	CONTROLLED RELEASE PHARMACEUTICAL COMPOSITION OF TOLPERISONE FOR ORAL ADMINISTRATION
A 61K 31/4453	EP 2024359*	COMPOUNDS THAT ARE AGONISTS OF MUSCARINIC RECEPTORS AND THAT MAY BE EFFECTIVE IN TREATING PAIN, ALZHEIMER'S DECEASE AND/OR SCHIZOPHRENIA
A 61K 31/4468	EP 2173343*	USE OF PIMAVANSERIN IN THE TREATMENT OF PARKINSON AND SYMPTOMS THEREOF
A 61K 31/45	EP 2037919*	METHOD OF USING SUBSTITUTED PIPERIDINES THAT INCREASE P53 ACTIVITY
A 61K 31/452	EP 1879887*	NPY ANTAGONISTS, PREPARATION AND USE
A 61K 31/4523	EP 2173715*	USE OF PIPERIDINE DERIVATIVES AS AGONISTS OF CHEMOKINE RECEPTOR ACTIVITY
A 61K 31/4525	EP 2001471*	USE OF COMBINATION PREPARATIONS CONTAINING THROMBIN RECEPTOR ANTAGONISTS FOR TREATING CARDIOVASCULAR DISORDERS
A 61K 31/4535	EP 1832286	PREVENTIVE OR THERAPEUTIC AGENT FOR SLEEP DISORDER
A 61K 31/4535	EP 2173715*	USE OF PIPERIDINE DERIVATIVES AS AGONISTS OF CHEMOKINE RECEPTOR ACTIVITY
A 61K 31/454	EP 2037919*	METHOD OF USING SUBSTITUTED PIPERIDINES THAT INCREASE P53 ACTIVITY
A 61K 31/454	EP 2173715*	USE OF PIPERIDINE DERIVATIVES AS AGONISTS OF CHEMOKINE RECEPTOR ACTIVITY
A 61K 31/4545	EP 1983986*	PIPERIDINE DERIVATIVES AS CXCR3 RECEPTOR ANTAGONISTS
A 61K 31/4545	EP 2024359*	COMPOUNDS THAT ARE AGONISTS OF MUSCARINIC RECEPTORS AND THAT MAY BE EFFECTIVE IN TREATING PAIN, ALZHEIMER'S DECEASE AND/OR SCHIZOPHRENIA
A 61K 31/4545	EP 2037919*	METHOD OF USING SUBSTITUTED PIPERIDINES THAT INCREASE P53 ACTIVITY
A 61K 31/4545	EP 2173715*	USE OF PIPERIDINE DERIVATIVES AS AGONISTS OF CHEMOKINE RECEPTOR ACTIVITY
A 61K 31/4704	EP 1715849*	STABLE PHARMACEUTICAL SOLUTION FORMULATION FOR PRESSURIZED METERED DOSE INHALERS
A 61K 31/4709	EP 1901745*	SYNERGISTIC MODULATION OF FLT3 KINASE USING AMINOPYRIMIDINES KINASE MODULATORS AND A FARNESYL TRANSFERASE INHIBITOR
A 61K 31/4709	EP 2043631*	NEW INDICATIONS FOR DIRECT THROMBIN INHIBITORS IN THE CARDIOVASCULAR FIELD
A 61K 31/4725	EP 1838686*	DERIVATIVES OF ISOTHIAZOL-3(2H)-ONE 1,1-DIOXIDES AS LIVER X RECEPTOR MODULATORS
A 61K 31/473	EP 1867642	AGENT FOR PREVENTION OR TREATMENT OF NOCTURNAL BEHAVIORAL DISORDER ASSOCIATED WITH DEMENTIA
A 61K 31/4741	EP 2125825*	ABCA1 ELEVATING COMPOUNDS
A 61K 31/4743	EP 1863571*	COMPOUNDS FOR INHIBITING KSP KINESIN ACTIVITY
A 61K 31/4745	EP 2043645*	COMPOUNDS AND COMPOSITIONS FOR TREATMENT OF CANCER
A 61K 31/4745	EP 2183251*	INDAZOLE COMPOUNDS FOR TREATING INFLAMMATORY DISORDERS, DEMYELINATING DISORDERS AND CANCERS
A 61K 31/495	EP 1924568*	QUINAZOLINE DERIVATIVES USEFUL IN CANCER TREATMENT
A 61K 31/495	EP 2139480*	RANOLAZINE FOR ENHANCING INSULIN SECRETION

(51)	Број објаве европске пријаве патента	(51)
A 61K 31/496	EP 1817294*	1,2,3,4-TETRAHYDROPYRAZIN-2-YL ACETAMIDES AND THEIR USE AS BRADYKININ ANTAGONISTS FOR THE TREATMENT OF INFLAMMATION RELATED DISORDERS
A 61K 31/497	EP 2001476*	BENZOIMIDAZOLYL-PARAZINE COMPOUNDS FOR INFLAMMATION AND IMMUNE-RELATED USES
A 61K 31/50	EP 1864663	PREVENTIVE AND/OR THERAPEUTIC AGENT FOR RHEUMATOID ARTHRITIS
A 61K 31/506	EP 2182986*	ANTI-MITOTIC AGENT AND AURORA KINASE INHIBITOR COMBINATION AS ANTI-CANCER TREATMENT
A 61K 31/506	EP 2227478*	PROCESS AND INTERMEDIATES FOR THE PREPARATION OF SUBSTITUTED 1, 3-OXATHIOLANES, ESPECIALLY LAMIVUDINE
A 61K 31/513	EP 1942899*	MITOTIC KINESIN INHIBITORS
A 61K 31/517	EP 2182986*	ANTI-MITOTIC AGENT AND AURORA KINASE INHIBITOR COMBINATION AS ANTI-CANCER TREATMENT
A 61K 31/519	EP 1832286	PREVENTIVE OR THERAPEUTIC AGENT FOR SLEEP DISORDER
A 61K 31/519	EP 2044086*	THIAZOLOPYRIMIDINE MODULATORS OF TRPV1
A 61K 31/519	EP 2102211*	HETEROBICYCLIC METALLOPROTEASE INHIBITORS
A 61K 31/519	EP 2173343*	USE OF PIMAVANSERIN IN THE TREATMENT OF PARKINSON AND SYMPTOMS THEREOF
A 61K 31/519	EP 2182986*	ANTI-MITOTIC AGENT AND AURORA KINASE INHIBITOR COMBINATION AS ANTI-CANCER TREATMENT
A 61K 31/536	EP 1902049*	NON-STEROIDAL PROGESTERONE RECEPTOR MODULATORS
A 61K 31/5375	EP 1924554*	SULPHONAMIDE DERIVATIVES
A 61K 31/5377	EP 1838686*	DERIVATIVES OF ISOTHIAZOL-3(2H)-ONE 1,1-DIOXIDES AS LIVER X RECEPTOR MODULATORS
A 61K 31/5415	EP 1711054*	METHOD AND COMPOSITIONS FOR TREATMENT OF PAINFUL DISORDERS
A 61K 31/55	EP 1711054*	METHOD AND COMPOSITIONS FOR TREATMENT OF PAINFUL DISORDERS
A 61K 31/55	EP 1729737*	DISINTEGRATING TABLETS COMPRISING LICARBAZEPINE
A 61K 31/55	EP 1776368*	INHIBITORS OF HCV REPLICATION
A 61K 31/55	EP 1867642	AGENT FOR PREVENTION OR TREATMENT OF NOCTURNAL BEHAVIORAL DISORDER ASSOCIATED WITH DEMENTIA
A 61K 31/55	EP 1973914*	TRANSFORMING GROWTH FACTOR MODULATORS
A 61K 31/55	EP 2146699*	PHARMACEUTICAL COMPOSITIONS COMPRISING OXCARBAZEPINE
A 61K 31/551	EP 2102209*	NOVEL TRIAZABENZO[A]NAPHTHO[2,1,8-cde]AZULENE DERIVATIVES, METHOD FOR PREPARING THE SAME AND PHARMACEUTICAL COMPOSITIONS CONTAINING THE SAME
A 61K 31/5513	EP 1781665*	OLANZAPINE SALTS AND THEIR CONVERSION TO OLANZAPINE FREE BASE
A 61K 31/553	EP 1711054*	METHOD AND COMPOSITIONS FOR TREATMENT OF PAINFUL DISORDERS
A 61K 31/553	EP 1889632	REMEDY FOR XANTHOMA
A 61K 31/553	EP 1962832*	COMBINATIONS OF A QUALENE SYNTHASE INHIBITOR AND A HMG-COA REDUCTASE INHIBITOR FOR TREATING HYPERLIPIDEMIA
A 61K 31/554	EP 1711054*	METHOD AND COMPOSITIONS FOR TREATMENT OF PAINFUL DISORDERS
A 61K 31/555	EP 1740094*	PYRIDYL-SUBSTITUTED PORPHYRIN COMPOUNDS AND METHODS OF USE THEREOF
A 61K 31/555	EP 1865777*	STANNSOPORFIN COMPOSITIONS AND ADMINISTRATION
A 61K 31/5575	EP 1824494*	TOPICAL DRUG DELIVERY SYSTEM

(51)	Број објаве европске пријаве патента	(51)
A 61K 31/565	EP 1930010	Application of estradiol valerate or 17ß-estradiol in combination with dienogest for oral therapy to maintain and/or increase the female libido
A 61K 31/57	EP 1930010	Application of estradiol valerate or 17ß-estradiol in combination with dienogest for oral therapy to maintain and/or increase the female libido
A 61K 31/58	EP 1742960*	CRYSTALLINE AND AMORPHOUS FORMS OF SMILAGENIN
A 61K 31/58	EP 1809650*	POLYMORPHS OF SARSAPOGENIN
A 61K 31/64	EP 2190417*	PHARMACEUTICAL COMPOSITIONS COMPRISING INSULIN SENSITIZER AND INSULIN SECRETAGOGUE
A 61K 31/65	EP 1968563*	TREATMENT METHODS USING TRIARYL METHANE COMPOUNDS
A 61K 31/69	EP 2190411*	LIPOSOME COMPOSITIONS FOR IN VIVO ADMINISTRATION OF BORONIC ACID COMPOUNDS
A 61K 31/69	EP 2190412*	LIPOSOME FORMULATIONS OF BORONIC ACID COMPOUNDS
A 61K 31/695	EP 1968563*	TREATMENT METHODS USING TRIARYL METHANE COMPOUNDS
A 61K 31/70	EP 1874788*	MONOSACCHARIDE DERIVATIVES AS ANTI-INFLAMMATORY AND/OR ANTI-CANCER AGENTS
A 61K 31/7004	EP 1692305*	DIAGNOSIS AND TREATMENT OF DISEASES ARISING FROM DEFECTS IN THE TUBEROUS SCLEROSIS PATHWAY
A 61K 31/7004	EP 1874788*	MONOSACCHARIDE DERIVATIVES AS ANTI-INFLAMMATORY AND/OR ANTI-CANCER AGENTS
A 61K 31/7028	EP 1874788*	MONOSACCHARIDE DERIVATIVES AS ANTI-INFLAMMATORY AND/OR ANTI-CANCER AGENTS
A 61K 31/7042	EP 1874788*	MONOSACCHARIDE DERIVATIVES AS ANTI-INFLAMMATORY AND/OR ANTI-CANCER AGENTS
A 61K 31/7056	EP 1692305*	DIAGNOSIS AND TREATMENT OF DISEASES ARISING FROM DEFECTS IN THE TUBEROUS SCLEROSIS PATHWAY
A 61K 31/7105	EP 1773857*	IMMUNOSTIMULATORY SIRNA MOLECULES AND USES THEREFOR
A 61K 31/713	EP 1773857*	IMMUNOSTIMULATORY SIRNA MOLECULES AND USES THEREFOR
A 61K 31/713	EP 1833490*	RNAI MODULATION OF RSV AND THERAPEUTIC USES THEREOF
A 61K 31/713	EP 2171059*	RNAI INHIBITION OF ALPHA-ENAC EXPRESSION
A 61K 31/74	EP 1691819*	CHAPERONE-BASED THERAPY FOR NIEMANN-PICK DISEASE
A 61K 35/00	EP 1734973*	NOVEL METHOD OF NEUROPROTECTION BY PHARMACOLOGICAL INHIBITION OF AMP-ACTIVATED PROTEIN KINASE
A 61K 35/00	EP 1871361*	PHOSPHOLIPID-BASED PHARMACEUTICAL FORMULATIONS AND METHODS FOR PRODUCING AND USING SAME
A 61K 35/12	EP 1993573*	SYSTEMS AND METHODS FOR MONITORING IMMUNE RESPONSES AND PREDICTING OUTCOMES IN TRANSPLANT RECIPIENTS
A 61K 35/14	EP 2167649*	IMMUNOTHERAPY FOR HEMATOLOGICAL MALIGNANCIES
A 61K 35/60	EP 1744794*	POLYMER-CERAMIC-HYDROGEL COMPOSITE SCAFFOLD FOR OSTEOCHONDRAL REPAIR
A 61K 38/00	EP 1734973*	NOVEL METHOD OF NEUROPROTECTION BY PHARMACOLOGICAL INHIBITION OF AMP-ACTIVATED PROTEIN KINASE
A 61K 38/00	EP 1805209*	NOGO-A POLYPEPTIDE FRAGMENTS, VARIANT NOGO RECEPTOR-1 POLYPEPTIDES, AND USES THEREOF

(51)	Број објаве европске пријаве патента	(51)
A 61K 38/00	EP 1863513*	POTENT AND SPECIFIC IMMUNOPROTEASOME INHIBITORS
A 61K 38/00	EP 1951890*	METHODS AND COMPOSITIONS COMPRISING NON-NATURAL AMINO ACIDS
A 61K 38/00	EP 2056849*	METHODS AND COMPOSITIONS FOR TREATING IGE-MEDIATED DISEASES
A 61K 38/04	EP 1828246*	MYD88 HOMODIMERIZATION INHIBITORS
A 61K 38/04	EP 2049568*	ERBB RECEPTOR-DERIVED PEPTIDE FRAGMENTS
A 61K 38/06	EP 1981524*	COMBINATIONS COMPRISING HCV PROTEASE INHIBITOR(S) AND HCV POLYMERASE INHIBITOR(S), AND METHODS OF TREATMENT RELATED THERETO
A 61K 38/07	EP 1981524*	COMBINATIONS COMPRISING HCV PROTEASE INHIBITOR(S) AND HCV POLYMERASE INHIBITOR(S), AND METHODS OF TREATMENT RELATED THERETO
A 61K 38/08	EP 1846016*	METHODS OF INCREASING CEREBRAL BLOOD FLOW
A 61K 38/08	EP 1981524*	COMBINATIONS COMPRISING HCV PROTEASE INHIBITOR(S) AND HCV POLYMERASE INHIBITOR(S), AND METHODS OF TREATMENT RELATED THERETO
A 61K 38/10	EP 1891100*	SCLEROSTIN EPITOPES
A 61K 38/17	EP 1846444*	AGENTS INHIBITING THE CATHELIN-LIKE PROTEIN CAP18/LL-37
A 61K 38/17	EP 1891100*	SCLEROSTIN EPITOPES
A 61K 38/17	EP 2032152*	USE CATHELICIDIN ANTIMICROBIAL PROTEIN (HCAP18) AS ANTICANCER AGENT
A 61K 38/17	EP 2241323	Tenascin-W and brain cancers
A 61K 38/18	EP 1737484*	COMBINATION DOSING REGIMEN FOR ERYTHROPOIETIN
A 61K 38/58	EP 2043631*	NEW INDICATIONS FOR DIRECT THROMBIN INHIBITORS IN THE CARDIOVASCULAR FIELD
A 61K 39/00	EP 1729802*	ENHANCED ACTIVITY OF HIV VACCINE USING A SECOND GENERATION IMMUNOMODULATORY OLIGONUCLEOTIDE
A 61K 39/00	EP 1993597*	HUMAN TELOMERASE REVERSE TRANSCRIPTASE PEPTIDES
A 61K 39/00	EP 2056849*	METHODS AND COMPOSITIONS FOR TREATING IGE-MEDIATED DISEASES
A 61K 39/00	EP 2167649*	IMMUNOTHERAPY FOR HEMATOLOGICAL MALIGNANCIES
A 61K 39/165	EP 2303322*	RECOMBINANT MODIFIED VACCINIA VIRUS MEASLES VACCINE
A 61K 39/21	EP 1729802*	ENHANCED ACTIVITY OF HIV VACCINE USING A SECOND GENERATION IMMUNOMODULATORY OLIGONUCLEOTIDE
A 61K 39/38	EP 2056849*	METHODS AND COMPOSITIONS FOR TREATING IGE-MEDIATED DISEASES
A 61K 39/39	EP 1740208*	MONOCLONAL ANTIBODIES SPECIFIC FOR HUMAN OX40L (CD134L)
A 61K 39/395	EP 1740208*	MONOCLONAL ANTIBODIES SPECIFIC FOR HUMAN OX40L (CD134L)
A 61K 39/395	EP 1851249*	CD20 ANTIBODY VARIANTS AND USES THEREOF
A 61K 39/395	EP 1910419*	COMPOSITIONS AND METHODS FOR THE DIAGNOSIS AND TREATMENT OF TUMOR
A 61K 39/395	EP 2160411*	ANTI-VPAC1 ANTIBODIES AND THEIR USES
A 61K 41/00	EP 2190411*	LIPOSOME COMPOSITIONS FOR IN VIVO ADMINISTRATION OF BORONIC ACID COMPOUNDS
A 61K 41/00	EP 2190412*	LIPOSOME FORMULATIONS OF BORONIC ACID COMPOUNDS
A 61K 45/00	EP 1867642	AGENT FOR PREVENTION OR TREATMENT OF NOCTURNAL BEHAVIORAL DISORDER ASSOCIATED WITH DEMENTIA

(51)	Број објаве европске пријаве патента	(51)
A 61K 45/00	EP 1993597*	HUMAN TELOMERASE REVERSE TRANSCRIPTASE PEPTIDES
A 61K 45/06	EP 1832286	PREVENTIVE OR THERAPEUTIC AGENT FOR SLEEP DISORDER
A 61K 45/06	EP 1962832*	COMBINATIONS OF A QUALENE SYNTHASE INHIBITOR AND A HMG-COA REDUCTASE INHIBITOR FOR TREATING HYPERLIPIDEMIA
A 61K 45/06	EP 1981524*	COMBINATIONS COMPRISING HCV PROTEASE INHIBITOR(S) AND HCV POLYMERASE INHIBITOR(S), AND METHODS OF TREATMENT RELATED THERETO
A 61K 45/06	EP 2061451*	BIS(THIOHYDRAZIDE AMIDES) FOR TREATING MELANOMA
A 61K 45/06	EP 2109461*	METHOD FOR IMPROVING PHARMACOKINETICS
A 61K 45/06	EP 2139480*	RANOLAZINE FOR ENHANCING INSULIN SECRETION
A 61K 45/06	EP 2182986*	ANTI-MITOTIC AGENT AND AURORA KINASE INHIBITOR COMBINATION AS ANTI-CANCER TREATMENT
A 61K 47/10	EP 1737494*	FREEZE-DRIED, FREE-FLOWING, PARTICULATE COMPOSITION HAVING IMPROVED PALATABILITY
A 61K 47/10	EP 1824494*	TOPICAL DRUG DELIVERY SYSTEM
A 61K 47/14	EP 1824494*	TOPICAL DRUG DELIVERY SYSTEM
A 61K 47/26	EP 2201951	Octenidine composition
A 61K 47/32	EP 1737455*	CONTROLLED RELEASE PHARMACEUTICAL COMPOSITION OF TOLPERISONE FOR ORAL ADMINISTRATION
A 61K 47/34	EP 2201951	Octenidine composition
A 61K 47/38	EP 1824494*	TOPICAL DRUG DELIVERY SYSTEM
A 61K 47/48	EP 1737496*	NOVEL G-CSF CONJUGATES
A 61K 47/48	EP 2035042*	METALLO-HYDROLASE INHIBITORS USING METAL BINDING MOIETIES IN COMBINATION WITH TARGETING MOIETIES
A 61K 47/48	EP 2152751*	FUSION OR LINKED PROTEINS WITH EXTENDED HALF LIFE
A 61K 47/48	EP 2190411*	LIPOSOME COMPOSITIONS FOR IN VIVO ADMINISTRATION OF BORONIC ACID COMPOUNDS
A 61K 47/48	EP 2190412*	LIPOSOME FORMULATIONS OF BORONIC ACID COMPOUNDS
A 61K 48/00	EP 1773857*	IMMUNOSTIMULATORY SIRNA MOLECULES AND USES THEREFOR
A 61K 48/00	EP 2001517*	REGULATED EXPRESSION OF RECOMBINANT PROTEINS FROM ADENO-ASSOCIATED VIRAL VECTORS
A 61K 49/00	EP 1740225*	CONTRAST AGENTS FOR MYOCARDIAL PERFUSION IMAGING
A 61K 51/04	EP 1740225*	CONTRAST AGENTS FOR MYOCARDIAL PERFUSION IMAGING
A 61K 101/02	EP 1740225*	CONTRAST AGENTS FOR MYOCARDIAL PERFUSION IMAGING
A 61L 9/04	EP 2121046*	FRAGRANCE DISPENSER
A 61L 9/12	EP 2121046*	FRAGRANCE DISPENSER
A 61L 9/12	EP 2133104	Core for Rolls
A 61M 1/00	EP 1833528*	INJECTION APPARATUS HAVING A PLURALITY OF STOPPERS
A 61M 15/00	EP 1715849*	STABLE PHARMACEUTICAL SOLUTION FORMULATION FOR PRESSURIZED METERED DOSE INHALERS
A 61N 1/00	EP 1690323*	METHOD OF MODULATING LASER-ACCELERATED PROTONS FOR RADIATION THERAPY
A 61N 1/00	EP 2195077*	TREATMENT OF MIGRAINE HEADACHES USING ANTIESTROGENS
A 61N 1/04	EP 1911490	SLEEP DISORDER TREATING DEVICE AND SLEEP DISORDER TREATING METHOD
A 61N 1/05	EP 1911490	SLEEP DISORDER TREATING DEVICE AND SLEEP DISORDER TREATING METHOD

(51)	Број објаве европске пријаве патента	(51)
A 61N 1/36	EP 1911490	SLEEP DISORDER TREATING DEVICE AND SLEEP DISORDER TREATING METHOD
A 61N 5/00	EP 1690323*	METHOD OF MODULATING LASER-ACCELERATED PROTONS FOR RADIATION THERAPY
A 61N 5/10	EP 1924324*	METHOD AND APPARATUS FOR APPLYING RADIOTHERAPY
A 61P 1/00	EP 1797083*	SULFONAMIDE COMPOUNDS
A 61P 1/00	EP 1904454*	PROCESS FOR THE PRODUCTION OF INTERMADIATES FOR THE PREPARATION OF TRICYCLIC BENZIMIDAZOLES
A 61P 1/02	EP 2165706	Treating Inflammatory Pain in Mucosa of the Oral Cavity Using Mucosal Prolonged Release Bioadhesive Therapeutic Carriers.
A 61P 1/04	EP 1899338*	SPIRO-BENZIMIDAZOLES AS INHIBITORS OF GASTRIC ACID SECRETION
A 61P 1/04	EP 1963306*	ESOMEPRAZOLE ARGININE
A 61P 1/16	EP 1865777*	STANNSOPORFIN COMPOSITIONS AND ADMINISTRATION
A 61P 1/16	EP 1962832*	COMBINATIONS OF A QUALENE SYNTHASE INHIBITOR AND A HMG-COA REDUCTASE INHIBITOR FOR TREATING HYPERLIPIDEMIA
A 61P 3/00	EP 1691819*	CHAPERONE-BASED THERAPY FOR NIEMANN-PICK DISEASE
A 61P 3/00	EP 1879887*	NPY ANTAGONISTS, PREPARATION AND USE
A 61P 3/00	EP 2008993	New crystalline form III of agomelatine, method of preparing same and pharmaceutical compositions containing same
A 61P 3/04	EP 1809650*	POLYMORPHS OF SARSAPOGENIN
A 61P 3/04	EP 2120911*	AMIDE AND UREA DERIVATIVES FOR THE TREATMENT OF METABOLIC DISEASES
A 61P 3/06	EP 1838686*	DERIVATIVES OF ISOTHIAZOL-3(2H)-ONE 1,1-DIOXIDES AS LIVER X RECEPTOR MODULATORS
A 61P 3/06	EP 1884513	PYRAZOLE COMPOUND AND THERAPEUTIC AGENT FOR DIABETES COMPRISING THE SAME
A 61P 3/06	EP 1889632	REMEDY FOR XANTHOMA
A 61P 3/06	EP 1962832*	COMBINATIONS OF A QUALENE SYNTHASE INHIBITOR AND A HMG-COA REDUCTASE INHIBITOR FOR TREATING HYPERLIPIDEMIA
A 61P 3/06	EP 1962835*	TREATMENT OF NONALCOHOLIC FATTY LIVER DISEASE USING CHOLESTEROL LOWERING AGENTS AND/OR H3 RECEPTOR ANTAGONIST/INVERSE AGONIST
A 61P 3/08	EP 1851202*	PYRIDYL ACETIC ACID COMPOUNDS
A 61P 3/10	EP 1838686*	DERIVATIVES OF ISOTHIAZOL-3(2H)-ONE 1,1-DIOXIDES AS LIVER X RECEPTOR MODULATORS
A 61P 3/10	EP 1962835*	TREATMENT OF NONALCOHOLIC FATTY LIVER DISEASE USING CHOLESTEROL LOWERING AGENTS AND/OR H3 RECEPTOR ANTAGONIST/INVERSE AGONIST
A 61P 3/10	EP 1968563*	TREATMENT METHODS USING TRIARYL METHANE COMPOUNDS
A 61P 3/10	EP 2048137	Benzamide derivatives and their use as glucokinase activating agents.
A 61P 3/10	EP 2139480*	RANOLAZINE FOR ENHANCING INSULIN SECRETION
A 61P 5/34	EP 1902049*	NON-STEROIDAL PROGESTERONE RECEPTOR MODULATORS
A 61P 5/50	EP 2139480*	RANOLAZINE FOR ENHANCING INSULIN SECRETION
A 61P 7/00	EP 2001471*	USE OF COMBINATION PREPARATIONS CONTAINING THROMBIN RECEPTOR ANTAGONISTS FOR TREATING CARDIOVASCULAR DISORDERS
A 61P 7/00	EP 2160411*	ANTI-VPAC1 ANTIBODIES AND THEIR USES
A 61P 7/02	EP 1879864*	FLUORINATED PYRIDINE N-OXIDE THROMBIN MODULATORS AND PROCESS FOR N-OXIDATION OF NITROGEN CONTAINING HETEROARYLS

(51)	Број објаве европске пријаве патента	(51)
A 61P 7/02	EP 2043631*	NEW INDICATIONS FOR DIRECT THROMBIN INHIBITORS IN THE CARDIOVASCULAR FIELD
A 61P 7/06	EP 1737484*	COMBINATION DOSING REGIMEN FOR ERYTHROPOIETIN
A 61P 9/00	EP 1692305*	DIAGNOSIS AND TREATMENT OF DISEASES ARISING FROM DEFECTS IN THE TUBEROUS SCLEROSIS PATHWAY
A 61P 9/00	EP 1838686*	DERIVATIVES OF ISOTHIAZOL-3(2H)-ONE 1,1-DIOXIDES AS LIVER X RECEPTOR MODULATORS
A 61P 9/00	EP 1973914*	TRANSFORMING GROWTH FACTOR MODULATORS
A 61P 9/00	EP 2008993	New crystalline form III of agomelatine, method of preparing same and pharmaceutical compositions containing same
A 61P 9/00	EP 2139480*	RANOLAZINE FOR ENHANCING INSULIN SECRETION
A 61P 9/04	EP 2043631*	NEW INDICATIONS FOR DIRECT THROMBIN INHIBITORS IN THE CARDIOVASCULAR FIELD
A 61P 9/10	EP 1734973*	NOVEL METHOD OF NEUROPROTECTION BY PHARMACOLOGICAL INHIBITION OF AMP-ACTIVATED PROTEIN KINASE
A 61P 9/10	EP 1838686*	DERIVATIVES OF ISOTHIAZOL-3(2H)-ONE 1,1-DIOXIDES AS LIVER X RECEPTOR MODULATORS
A 61P 9/10	EP 1846016*	METHODS OF INCREASING CEREBRAL BLOOD FLOW
A 61P 9/10	EP 1987005*	NEW PYRIDIN-3-AMINE DERIVATIVES
A 61P 9/10	EP 2043631*	NEW INDICATIONS FOR DIRECT THROMBIN INHIBITORS IN THE CARDIOVASCULAR FIELD
A 61P 9/10	EP 2067473	Medical use of 3-(2,2,2-trimethylhydrazinium) propionate salts
A 61P 9/10	EP 2125825*	ABCA1 ELEVATING COMPOUNDS
A 61P 9/12	EP 1931340*	NANOPARTICULATE AZELNIDIPINE FORMULATIONS
A 61P 9/12	EP 1968563*	TREATMENT METHODS USING TRIARYL METHANE COMPOUNDS
A 61P 9/12	EP 2043631*	NEW INDICATIONS FOR DIRECT THROMBIN INHIBITORS IN THE CARDIOVASCULAR FIELD
A 61P 9/14	EP 2043631*	NEW INDICATIONS FOR DIRECT THROMBIN INHIBITORS IN THE CARDIOVASCULAR FIELD
A 61P 11/00	EP 1844013*	INDOLES USEFUL IN THE TREATMENT OF INFLAMMATION
A 61P 11/00	EP 1973914*	TRANSFORMING GROWTH FACTOR MODULATORS
A 61P 11/00	EP 2076261*	MUSCARINIC RECEPTOR ANTAGONISTS
A 61P 11/00	EP 2173715*	USE OF PIPERIDINE DERIVATIVES AS AGONISTS OF CHEMOKINE RECEPTOR ACTIVITY
A 61P 11/06	EP 1874788*	MONOSACCHARIDE DERIVATIVES AS ANTI-INFLAMMATORY AND/OR ANTI-CANCER AGENTS
A 61P 11/06	EP 2314567	Inhibitors of the microsomal prostaglandin E2 synthase-1
A 61P 13/00	EP 2076261*	MUSCARINIC RECEPTOR ANTAGONISTS
A 61P 15/00	EP 1930010	Application of estradiol valerate or 17ß-estradiol in combination with dienogest for oral therapy to maintain and/or increase the female libido
A 61P 15/00	EP 1931340*	NANOPARTion of estradiol valerate or 17ß-estradiol in combination with dienogest for oral therapy to maintain and/or increase the female libido
A 61P 15/08	EP 2008993	New crystalline form III of agomelatine, method of preparing same and pharmaceutical compositions containing same
A 61P 15/10	EP 1824494*	TOPICAL DRUG DELIVERY SYSTEM
A 61P 15/12	EP 1824494*	TOPICAL DRUG DELIVERY SYSTEM
A 61P 15/12	EP 1930010	Application of estradiol valerate or 17ß-estradiol in combination with dienogest for oral therapy to maintain and/or increase the female libido
A 61P 15/18	EP 1930010	Application of estradiol valerate or 17ß-estradiol in combination with dienogest for oral therapy to maintain and/or increase the female libido
A 61P 17/00	EP 1874788*	MONOSACCHARIDE DERIVATIVES AS ANTI-INFLAMMATORY AND/OR ANTI-CANCER AGENTS

(51)	Број објаве европске пријаве патента	(51)
A 61P 17/00	EP 1889632	REMEDY FOR XANTHOMA
A 61P 17/00	EP 1940382*	COMBINATION THERAPY WITH FUMARIC ACID ESTERS FOR THE TREATMENT OF AUTOIMMUNE AND/OR INFLAMMATORY DISORDERS
A 61P 17/00	EP 2061451*	BIS(THIOHYDRAZIDE AMIDES) FOR TREATING MELANOMA
A 61P 17/00	EP 2173715*	USE OF PIPERIDINE DERIVATIVES AS AGONISTS OF CHEMOKINE RECEPTOR ACTIVITY
A 61P 17/06	EP 1812374*	NOVEL SALTS OF FUMARIC ACID MONOALKYLESTERS AND THEIR PHARMACEUTICAL USE
A 61P 17/06	EP 1940382*	COMBINATION THERAPY WITH FUMARIC ACID ESTERS FOR THE TREATMENT OF AUTOIMMUNE AND/OR INFLAMMATORY DISORDERS
A 61P 19/00	EP 2173715*	USE OF PIPERIDINE DERIVATIVES AS AGONISTS OF CHEMOKINE RECEPTOR ACTIVITY
A 61P 19/02	EP 1968563*	TREATMENT METHODS USING TRIARYL METHANE COMPOUNDS
A 61P 19/02	EP 2314567	Inhibitors of the microsomal prostaglandin E2 synthase-1
A 61P 19/10	EP 1742960*	CRYSTALLINE AND AMORPHOUS FORMS OF SMILAGENIN
A 61P 25/00	EP 1831185*	TRIAZOLONE, TETRAZOLONE AND IMIDAZOLONE DERIVATIVES FOR USE AS ALPHA-2C ADRENORECEPTOR ANTAGONISTS
A 61P 25/00	EP 1891073*	NOVEL SUBSTITUTED TETRACYCLIC TETRAHYDROFURAN, PYRROLIDINE AND TETRAHYDROTHIOPHENE DERIVATIVES AND THEIR USE AS A MEDICAMENT
A 61P 25/00	EP 2008993	New crystalline form III of agomelatine, method of preparing same and pharmaceutical compositions containing same
A 61P 25/00	EP 2102209*	NOVEL TRIAZABENZO[A]NAPHTHO[2,1,8-cde]AZULENE DERIVATIVES, METHOD FOR PREPARING THE SAME AND PHARMACEUTICAL COMPOSITIONS CONTAINING THE SAME
A 61P 25/02	EP 1737455*	CONTROLLED RELEASE PHARMACEUTICAL COMPOSITION OF TOLPERISONE FOR ORAL ADMINISTRATION
A 61P 25/02	EP 1968563*	TREATMENT METHODS USING TRIARYL METHANE COMPOUNDS
A 61P 25/04	EP 1885351*	METHODS AND COMPOSITIONS FOR THE TREATMENT OF PAIN
A 61P 25/16	EP 2026793*	USE OF ESCITALOPRAM FOR IMPROVING COGNITION
A 61P 25/18	EP 1729737*	DISINTEGRATING TABLETS COMPRISING LICARBAZEPINE
A 61P 25/18	EP 1781665*	OLANZAPINE SALTS AND THEIR CONVERSION TO OLANZAPINE FREE BASE
A 61P 25/18	EP 2024359*	COMPOUNDS THAT ARE AGONISTS OF MUSCARINIC RECEPTORS AND THAT MAY BE EFFECTIVE IN TREATING PAIN, ALZHEIMER'S DECEASE AND/OR SCHIZOPHRENIA
A 61P 25/20	EP 1832286	PREVENTIVE OR THERAPEUTIC AGENT FOR SLEEP DISORDER
A 61P 25/20	EP 1867642	AGENT FOR PREVENTION OR TREATMENT OF NOCTURNAL BEHAVIORAL DISORDER ASSOCIATED WITH DEMENTIA
A 61P 25/22	EP 2026793*	USE OF ESCITALOPRAM FOR IMPROVING COGNITION
A 61P 25/24	EP 1729737*	DISINTEGRATING TABLETS COMPRISING LICARBAZEPINE
A 61P 25/24	EP 1732514*	CRYSTALLINE COMPOSITION CONTAINING ESCITALOPRAM OXALATE

(51)	Број објаве европске пријаве патента	(51)
A 61P 25/24	EP 2024359*	COMPOUNDS THAT ARE AGONISTS OF MUSCARINIC RECEPTORS AND THAT MAY BE EFFECTIVE IN TREATING PAIN, ALZHEIMER'S DECEASE AND/OR SCHIZOPHRENIA
A 61P 25/24	EP 2026793*	USE OF ESCITALOPRAM FOR IMPROVING COGNITION
A 61P 25/28	EP 1742960*	CRYSTALLINE AND AMORPHOUS FORMS OF SMILAGENIN
A 61P 25/28	EP 1809650*	POLYMORPHS OF SARSAPOGENIN
A 61P 25/28	EP 1838686*	DERIVATIVES OF ISOTHIAZOL-3(2H)-ONE 1,1-DIOXIDES AS LIVER X RECEPTOR MODULATORS
A 61P 25/28	EP 1867642	AGENT FOR PREVENTION OR TREATMENT OF NOCTURNAL BEHAVIORAL DISORDER ASSOCIATED WITH DEMENTIA
A 61P 25/28	EP 1940382*	COMBINATION THERAPY WITH FUMARIC ACID ESTERS FOR THE TREATMENT OF AUTOIMMUNE AND/OR INFLAMMATORY DISORDERS
A 61P 25/28	EP 2024359*	COMPOUNDS THAT ARE AGONISTS OF MUSCARINIC RECEPTORS AND THAT MAY BE EFFECTIVE IN TREATING PAIN, ALZHEIMER'S DECEASE AND/OR SCHIZOPHRENIA
A 61P 25/28	EP 2026793*	USE OF ESCITALOPRAM FOR IMPROVING COGNITION
A 61P 25/28	EP 2088149	PHARMACOLOGICALLY ACTIVE N,N'-SUBSTITUTED 3,7-DIAZABICYCLO [3.3.1]NONANES, PHARMACEUTICAL COMPOSITIONS BASED THEREON AND A METHOD FOR THE USE THEREOF
A 61P 25/28	EP 2173343*	USE OF PIMAVANSERIN IN THE TREATMENT OF PARKINSON AND SYMPTOMS THEREOF
A 61P 25/30	EP 2026793*	USE OF ESCITALOPRAM FOR IMPROVING COGNITION
A 61P 27/02	EP 2162124*	NERAMEXANE FOR THE TREATMENT OF NYSTAGMUS
A 61P 27/10	EP 2162124*	NERAMEXANE FOR THE TREATMENT OF NYSTAGMUS
A 61P 29/00	EP 1732900*	ACRYLONITRILE DERIVATIVES FOR INFLAMMATION AND IMMUNE-RELATED USES
A 61P 29/00	EP 1817294*	1,2,3,4-TETRAHYDROPYRAZIN-2-YL ACETAMIDES AND THEIR USE AS BRADYKININ ANTAGONISTS FOR THE TREATMENT OF INFLAMMATION RELATED DISORDERS
A 61P 29/00	EP 1844013*	INDOLES USEFUL IN THE TREATMENT OF INFLAMMATION
A 61P 29/00	EP 1864663	PREVENTIVE AND/OR THERAPEUTIC AGENT FOR RHEUMATOID ARTHRITIS
A 61P 29/00	EP 1885351*	METHODS AND COMPOSITIONS FOR THE TREATMENT OF PAIN
A 61P 29/00	EP 1940382*	COMBINATION THERAPY WITH FUMARIC ACID ESTERS FOR THE TREATMENT OF AUTOIMMUNE AND/OR INFLAMMATORY DISORDERS
A 61P 29/00	EP 1983986*	PIPERIDINE DERIVATIVES AS CXCR3 RECEPTOR ANTAGONISTS
A 61P 29/00	EP 2029581*	P38 INHIBITORS AND METHODS OF USE THEREOF
A 61P 29/00	EP 2044086*	THIAZOLOPYRIMIDINE MODULATORS OF TRPV1
A 61P 29/00	EP 2173715*	USE OF PIPERIDINE DERIVATIVES AS AGONISTS OF CHEMOKINE RECEPTOR ACTIVITY
A 61P 29/00	EP 2183251*	INDAZOLE COMPOUNDS FOR TREATING INFLAMMATORY DISORDERS, DEMYELINATING DISORDERS AND CANCERS
A 61P 29/00	EP 2314567	Inhibitors of the microsomal prostaglandin E2 synthase-1
A 61P 31/00	EP 2183251*	INDAZOLE COMPOUNDS FOR TREATING INFLAMMATORY DISORDERS, DEMYELINATING DISORDERS AND CANCERS
A 61P 31/14	EP 1776368*	INHIBITORS OF HCV REPLICATION
A 61P 31/14	EP 1981524*	COMBINATIONS COMPRISING HCV PROTEASE INHIBITOR(S) AND HCV POLYMERASE INHIBITOR(S), AND METHODS OF TREATMENT RELATED THERETO

(51)	Број објаве европске пријаве патента	(51)
A 61P 31/18	EP 1807450*	METHOD OF SELECTION OF ANTI HIV-1-gp41 NEUTRALIZING HUMAN MONOCLONAL ANTIBODIES
A 61P 31/18	EP 2227478*	PROCESS AND INTERMEDIATES FOR THE PREPARATION OF SUBSTITUTED 1, 3-OXATHIOLANES, ESPECIALLY LAMIVUDINE
A 61P 31/22	EP 2209796*	MACROCYCLIC INHIBITORS OF HEPATITIS C VIRUS NS3 SERINE PROTEASE
A 61P 35/00	EP 1692305*	DIAGNOSIS AND TREATMENT OF DISEASES ARISING FROM DEFECTS IN THE TUBEROUS SCLEROSIS PATHWAY
A 61P 35/00	EP 1737496*	NOVEL G-CSF CONJUGATES
A 61P 35/00	EP 1827606*	ARYL AMIDE SPHINGOSINE 1-PHOSPHATE ANALOGS
A 61P 35/00	EP 1851229*	TETRAHYDROPYRIDOTHIOPHENES FOR THE TREATMENT OF PROLIFERATIVE DISEASES SUCH AS CANCER
A 61P 35/00	EP 1851249*	CD20 ANTIBODY VARIANTS AND USES THEREOF
A 61P 35/00	EP 1863571*	COMPOUNDS FOR INHIBITING KSP KINESIN ACTIVITY
A 61P 35/00	EP 1874788*	MONOSACCHARIDE DERIVATIVES AS ANTI-INFLAMMATORY AND/OR ANTI-CANCER AGENTS
A 61P 35/00	EP 1906950*	ANSAMYCIN FORMULATIONS AND METHODS OF USE THEREOF
A 61P 35/00	EP 1910419*	COMPOSITIONS AND METHODS FOR THE DIAGNOSIS AND TREATMENT OF TUMOR
A 61P 35/00	EP 1973914*	TRANSFORMING GROWTH FACTOR MODULATORS
A 61P 35/00	EP 1986630*	A TAXANE DERIVATIVE CONTAINING PHARMACEUTICAL COMPOSITION WITH IMPROVED THERAPEUTIC EFFICACY
A 61P 35/00	EP 2032152*	USE CATHELICIDIN ANTIMICROBIAL PROTEIN (HCAP18) AS ANTICANCER AGENT
A 61P 35/00	EP 2037919*	METHOD OF USING SUBSTITUTED PIPERIDINES THAT INCREASE P53 ACTIVITY
A 61P 35/00	EP 2043645*	COMPOUNDS AND COMPOSITIONS FOR TREATMENT OF CANCER
A 61P 35/00	EP 2061451*	BIS(THIOHYDRAZIDE AMIDES) FOR TREATING MELANOMA
A 61P 35/00	EP 2102211*	HETEROBICYCLIC METALLOPROTEASE INHIBITORS
A 61P 35/00	EP 2167649*	IMMUNOTHERAPY FOR HEMATOLOGICAL MALIGNANCIES
A 61P 35/00	EP 2182986*	ANTI-MITOTIC AGENT AND AURORA KINASE INHIBITOR COMBINATION AS ANTI-CANCER TREATMENT
A 61P 35/00	EP 2183251*	INDAZOLE COMPOUNDS FOR TREATING INFLAMMATORY DISORDERS, DEMYELINATING DISORDERS AND CANCERS
A 61P 37/00	EP 1851249*	CD20 ANTIBODY VARIANTS AND USES THEREOF
A 61P 37/00	EP 1874788*	MONOSACCHARIDE DERIVATIVES AS ANTI-INFLAMMATORY AND/OR ANTI-CANCER AGENTS
A 61P 37/00	EP 2004621*	POLYMORPHIC FORMS OF OLOPATADINE HYDROCHLORIDE AND METHODS FOR PRODUCING OLOPATADINE AND SALTS THEREOF
A 61P 37/00	EP 2004626*	BENZIMIDAZOLYL-PYRIDINE COMPOUNDS FOR INFLAMMATION AND IMMUNE-RELATED USES
A 61P 37/00	EP 2008993	New crystalline form III of agomelatine, method of preparing same and pharmaceutical compositions containing same
A 61P 37/04	EP 1871350*	METHODS OF INCREASING NATURAL KILLER CELL ACTIVITY FOR THERAPY
A 61P 43/00	EP 1737496*	NOVEL G-CSF CONJUGATES
A 61P 43/00	EP 1864663	PREVENTIVE AND/OR THERAPEUTIC AGENT FOR RHEUMATOID ARTHRITIS
A 61P 43/00	EP 1867642	AGENT FOR PREVENTION OR TREATMENT OF NOCTURNAL BEHAVIORAL DISORDER ASSOCIATED WITH DEMENTIA

(51)	Број објаве европске пријаве патента	(51)
A 61P 43/00	EP 2043631*	NEW INDICATIONS FOR DIRECT THROMBIN INHIBITORS IN THE CARDIOVASCULAR FIELD
A 61Q 1/02	EP 2100583	Foundation with particular organic light filter
A 61Q 5/00	EP 1778181*	COSMETIC MIXTURE FOR HAIR
A 61Q 7/00	EP 1778181*	COSMETIC MIXTURE FOR HAIR
A 61Q 19/08	EP 1952797	Use of a cosmetic composition comprising NMDA receptor agonists for cosmetic skin treatment
B 01D 11/02	EP 1835974*	METHOD AND APPARATUS FOR REMOVING SOLUTE FROM A SOLID SOLUTE-BEARING PRODUCT
B 01D 24/24	EP 1957175*	FILTERING SYSTEM FOR THE AIR DIRECTED TOWARDS AN INTERNAL COMBUSTION ENGINE INTAKE
B 01D 46/52	EP 1957175*	FILTERING SYSTEM FOR THE AIR DIRECTED TOWARDS AN INTERNAL COMBUSTION ENGINE INTAKE
B 01D 61/00	EP 1776174*	USE OF DEPTH FILTRATION IN SERIES WITH CONTINUOUS CENTRIFUGATION TO CLARIFY MAMMALIAN CELL CULTURES
B 01D 61/58	EP 1776174*	USE OF DEPTH FILTRATION IN SERIES WITH CONTINUOUS CENTRIFUGATION TO CLARIFY MAMMALIAN CELL CULTURES
B 01F 5/04	EP 1690442	Dosing unit for soil amendment or fertilizer products
B 01J 3/02	EP 1835974*	METHOD AND APPARATUS FOR REMOVING SOLUTE FROM A SOLID SOLUTE-BEARING PRODUCT
B 01J 8/00	EP 1835974*	METHOD AND APPARATUS FOR REMOVING SOLUTE FROM A SOLID SOLUTE-BEARING PRODUCT
B 05B 1/02	EP 1874481*	DEVICE FOR APPLYING A FLUID TO AN AREA TO BE TREATED, COMPRISING A TIMING SYSTEM
B 05B 1/30	EP 1874481*	DEVICE FOR APPLYING A FLUID TO AN AREA TO BE TREATED, COMPRISING A TIMING SYSTEM
B 05B 12/02	EP 1874481*	DEVICE FOR APPLYING A FLUID TO AN AREA TO BE TREATED, COMPRISING A TIMING SYSTEM
B 09C 1/08	EP 1740507*	IMPROVED MODIFIED SUBSTRATE FOR REMOVING AQUEOUS OXYANIONS
B 21D 5/14	EP 2148750*	APPARATUS FOR BENDING PLATES WITH ROLLS
B 22D 41/18	EP 1877213*	TUNDISH STOPPER ROD FOR CONTINUOUS MOLTEN METAL CASTING
B 25B 31/00	EP 1718875*	CONNECTING UNIT
B 25G 1/00	EP 2091696*	AUXILIARY HANDLE FOR A TOOL
B 25G 1/10	EP 2091696*	AUXILIARY HANDLE FOR A TOOL
B 26B 5/00	EP 2113346	Retractable utility knife
B 29C 33/48	EP 2146177	Method of making a protective structure
B 29C 45/00	EP 2146177	Method of making a protective structure
B 29C 45/44	EP 2146177	Method of making a protective structure
B 29C 65/00	EP 2040907*	INSTALLATION METHOD FOR NON-SLIP SANITARY FLOORING
B 29C 65/04	EP 2146177	Method of making a protective structure
B 31F 1/07	EP 2143345	Cigarette paper
B 32B 1/00	EP 1831006*	PLASTIC ARTICLE
B 32B 1/02	EP 1831006*	PLASTIC ARTICLE
B 32B 1/08	EP 1831006*	PLASTIC ARTICLE
B 32B 5/18	EP 1859929	Composite sheet made of a soft elastic foam plastic sheet and a knitted fabric sheet
B 32B 27/12	EP 1859929	Composite sheet made of a soft elastic foam plastic sheet and a knitted fabric sheet
B 41M 3/10	EP 2143345	Cigarette paper
B 41M 3/14	EP 2262646*	SUBSTRATE FOR SECURITY DOCUMENT
B 42D 15/00	EP 2262646*	SUBSTRATE FOR SECURITY DOCUMENT
B 42D 15/10	EP 2262646*	SUBSTRATE FOR SECURITY DOCUMENT
B 60K 17/35	EP 1967764	Central differential for a working vehicle
B 60K 23/06	EP 1967764	Central differential for a working vehicle
B 60N 2/58	EP 1859929	Composite sheet made of a soft elastic foam plastic sheet and a knitted fabric sheet

(51)	Број објаве европске пријаве патента	(51)
B 61B 12/02	EP 1980465	Mechanical device for guiding an overhead cable of a mechanical ski lift and method of using same
B 61D 33/00	EP 1859929	Composite sheet made of a soft elastic foam plastic sheet and a knitted fabric sheet
B 65D 1/36	EP 1584569	Packaging tray with outer cover
B 65D 1/40	EP 1831006*	PLASTIC ARTICLE
B 65D 21/02	EP 2161208	Storage box
B 65D 21/06	EP 2161208	Storage box
B 65D 23/10	EP 1831006*	PLASTIC ARTICLE
B 65D 25/36	EP 1584569	Packaging tray with outer cover
B 65D 39/00	EP 1853509*	BOTTLE CLOSURE
B 65D 77/04	EP 1584569	Packaging tray with outer cover
B 65D 83/14	EP 1715849*	STABLE PHARMACEUTICAL SOLUTION FORMULATION FOR PRESSURIZED METERED DOSE INHALERS
B 65D 83/16	EP 1874481*	DEVICE FOR APPLYING A FLUID TO AN AREA TO BE TREATED, COMPRISING A TIMING SYSTEM
B 65H 75/18	EP 2133104	Core for Rolls
B 67B 1/04	EP 1853509*	BOTTLE CLOSURE
C 01B 33/38	EP 1740507*	IMPROVED MODIFIED SUBSTRATE FOR REMOVING AQUEOUS OXYANIONS
C 01B 33/40	EP 1740507*	IMPROVED MODIFIED SUBSTRATE FOR REMOVING AQUEOUS OXYANIONS
C 01F 7/02	EP 2029484*	THERMALLY STABLE ALUMINUM TRIHYDROXIDE PARTICLES PRODUCED BY SPRAY DRYING WITH SUBSEQUENT DRY-MILLING AND THEIR USE
C 01F 7/18	EP 2029484*	THERMALLY STABLE ALUMINUM TRIHYDROXIDE PARTICLES PRODUCED BY SPRAY DRYING WITH SUBSEQUENT DRY-MILLING AND THEIR USE
C 02F 1/42	EP 1740507*	IMPROVED MODIFIED SUBSTRATE FOR REMOVING AQUEOUS OXYANIONS
C 02F 1/58	EP 1740507*	IMPROVED MODIFIED SUBSTRATE FOR REMOVING AQUEOUS OXYANIONS
C 02F 1/68	EP 1740507*	IMPROVED MODIFIED SUBSTRATE FOR REMOVING AQUEOUS OXYANIONS
C 02F 11/00	EP 1740507*	IMPROVED MODIFIED SUBSTRATE FOR REMOVING AQUEOUS OXYANIONS
C 03B 5/26	EP 2004559*	PRODUCTION PROCESS FOR CONTINUOUS MINERAL FIBRES
C 03B 37/08	EP 2004559*	PRODUCTION PROCESS FOR CONTINUOUS MINERAL FIBRES
C 07B 47/00	EP 1740094*	PYRIDYL-SUBSTITUTED PORPHYRIN COMPOUNDS AND METHODS OF USE THEREOF
C 07C 50/30	EP 1740225*	CONTRAST AGENTS FOR MYOCARDIAL PERFUSION IMAGING
C 07C 69/60	EP 1812374*	NOVEL SALTS OF FUMARIC ACID MONOALKYLESTERS AND THEIR PHARMACEUTICAL USE
C 07C 69/92	EP 2048137	Benzamide derivatives and their use as glucokinase activating agents.
C 07C 217/80	EP 1841465*	STILBENE DERIVATIVES AND THEIR USE FOR BINDING AND IMAGING AMYLOID PLAQUES
C 07C 229/60	EP 1942899*	MITOTIC KINESIN INHIBITORS
C 07C 231/24	EP 2008993	New crystalline form III of agomelatine, method of preparing same and pharmaceutical compositions containing same
C 07C 233/18	EP 2008993	New crystalline form III of agomelatine, method of preparing same and pharmaceutical compositions containing same
C 07C 233/76	EP 2314567	Inhibitors of the microsomal prostaglandin E2 synthase-1
C 07C 233/79	EP 2024359*	COMPOUNDS THAT ARE AGONISTS OF MUSCARINIC RECEPTORS AND THAT MAY BE EFFECTIVE IN TREATING PAIN, ALZHEIMER'S DECEASE AND/OR SCHIZOPHRENIA
C 07C 237/22	EP 1942899*	MITOTIC KINESIN INHIBITORS

(51)	Број објаве европске пријаве патента	(51)
C 07C 237/24	EP 2120911*	AMIDE AND UREA DERIVATIVES FOR THE TREATMENT OF METABOLIC DISEASES
C 07C 255/57	EP 1942899*	MITOTIC KINESIN INHIBITORS
C 07C 271/22	EP 1942899*	MITOTIC KINESIN INHIBITORS
C 07C 275/42	EP 2120911*	AMIDE AND UREA DERIVATIVES FOR THE TREATMENT OF METABOLIC DISEASES
C 07C 311/14	EP 2314567	Inhibitors of the microsomal prostaglandin E2 synthase-1
C 07C 311/21	EP 1797083*	SULFONAMIDE COMPOUNDS
C 07C 311/21	EP 1924554*	SULPHONAMIDE DERIVATIVES
C 07C 337/00	EP 1734939*	ANTI-PARASITIC COMPOUNDS AND METHODS OF THEIR USE
C 07D 207/08	EP 2120911*	AMIDE AND UREA DERIVATIVES FOR THE TREATMENT OF METABOLIC DISEASES
C 07D 207/16	EP 2120911*	AMIDE AND UREA DERIVATIVES FOR THE TREATMENT OF METABOLIC DISEASES
C 07D 207/30	EP 1765827*	A METHOD FOR PREPARING PYRROLOTRIAZINE COMPOUNDS
C 07D 207/34	EP 1924554*	SULPHONAMIDE DERIVATIVES
C 07D 207/34	EP 2120911*	AMIDE AND UREA DERIVATIVES FOR THE TREATMENT OF METABOLIC DISEASES
C 07D 209/14	EP 2079687*	COMPOSITIONS CONTAINING, METHODS INVOLVING, AND USES OF NON-NATURAL AMINO ACIDS AND POLYPEPTIDES
C 07D 209/42	EP 1844013*	INDOLES USEFUL IN THE TREATMENT OF INFLAMMATION
C 07D 209/42	EP 2120911*	AMIDE AND UREA DERIVATIVES FOR THE TREATMENT OF METABOLIC DISEASES
C 07D 209/80	EP 2079687*	COMPOSITIONS CONTAINING, METHODS INVOLVING, AND USES OF NON-NATURAL AMINO ACIDS AND POLYPEPTIDES
C 07D 209/94	EP 1891073*	NOVEL SUBSTITUTED TETRACYCLIC TETRAHYDROFURAN, PYRROLIDINE AND TETRAHYDROTHIOPHENE DERIVATIVES AND THEIR USE AS A MEDICAMENT
C 07D 211/06	EP 2024359*	COMPOUNDS THAT ARE AGONISTS OF MUSCARINIC RECEPTORS AND THAT MAY BE EFFECTIVE IN TREATING PAIN, ALZHEIMER'S DECEASE AND/OR SCHIZOPHRENIA
C 07D 211/26	EP 1983986*	PIPERIDINE DERIVATIVES AS CXCR3 RECEPTOR ANTAGONISTS
C 07D 211/32	EP 2039349	Solid pharmaceutical composition comprising donepezil hydrochloride
C 07D 211/42	EP 1879887*	NPY ANTAGONISTS, PREPARATION AND USE
C 07D 211/46	EP 1879887*	NPY ANTAGONISTS, PREPARATION AND USE
C 07D 211/58	EP 2173715*	USE OF PIPERIDINE DERIVATIVES AS AGONISTS OF CHEMOKINE RECEPTOR ACTIVITY
C 07D 211/70	EP 2076261*	MUSCARINIC RECEPTOR ANTAGONISTS
C 07D 211/96	EP 1983986*	PIPERIDINE DERIVATIVES AS CXCR3 RECEPTOR ANTAGONISTS
C 07D 213/30	EP 2076261*	MUSCARINIC RECEPTOR ANTAGONISTS
C 07D 213/50	EP 1924554*	SULPHONAMIDE DERIVATIVES
C 07D 213/55	EP 1851202*	PYRIDYL ACETIC ACID COMPOUNDS
C 07D 213/56	EP 1851202*	PYRIDYL ACETIC ACID COMPOUNDS
C 07D 213/72	EP 2120911*	AMIDE AND UREA DERIVATIVES FOR THE TREATMENT OF METABOLIC DISEASES
C 07D 213/73	EP 1942899*	MITOTIC KINESIN INHIBITORS
C 07D 213/73	EP 1987005*	NEW PYRIDIN-3-AMINE DERIVATIVES
C 07D 213/81	EP 2120911*	AMIDE AND UREA DERIVATIVES FOR THE TREATMENT OF METABOLIC DISEASES
C 07D 213/81	EP 2314567	Inhibitors of the microsomal prostaglandin E2 synthase-1

(51)	Број објаве европске пријаве патента	(51)
C 07D 213/82	EP 2120911*	AMIDE AND UREA DERIVATIVES FOR THE TREATMENT OF METABOLIC DISEASES
C 07D 213/82	EP 2314567	Inhibitors of the microsomal prostaglandin E2 synthase-1
C 07D 213/89	EP 1879864*	FLUORINATED PYRIDINE N-OXIDE THROMBIN MODULATORS AND PROCESS FOR N-OXIDATION OF NITROGEN CONTAINING HETEROARYLS
C 07D 213/89	EP 1987005*	NEW PYRIDIN-3-AMINE DERIVATIVES
C 07D 215/04	EP 2120911*	AMIDE AND UREA DERIVATIVES FOR THE TREATMENT OF METABOLIC DISEASES
C 07D 215/60	EP 1879864*	FLUORINATED PYRIDINE N-OXIDE THROMBIN MODULATORS AND PROCESS FOR N-OXIDATION OF NITROGEN CONTAINING HETEROARYLS
C 07D 221/18	EP 1891073*	NOVEL SUBSTITUTED TETRACYCLIC TETRAHYDROFURAN, PYRROLIDINE AND TETRAHYDROTHIOPHENE DERIVATIVES AND THEIR USE AS A MEDICAMENT
C 07D 223/00	EP 1729737*	DISINTEGRATING TABLETS COMPRISING LICARBAZEPINE
C 07D 231/12	EP 1732900*	ACRYLONITRILE DERIVATIVES FOR INFLAMMATION AND IMMUNE-RELATED USES
C 07D 231/14	EP 1732900*	ACRYLONITRILE DERIVATIVES FOR INFLAMMATION AND IMMUNE-RELATED USES
C 07D 231/40	EP 1884513	PYRAZOLE COMPOUND AND THERAPEUTIC AGENT FOR DIABETES COMPRISING THE SAME
C 07D 231/40	EP 2048137	Benzamide derivatives and their use as glucokinase activating agents.
C 07D 233/32	EP 1924554*	SULPHONAMIDE DERIVATIVES
C 07D 233/58	EP 1942899*	MITOTIC KINESIN INHIBITORS
C 07D 233/58	EP 2076261*	MUSCARINIC RECEPTOR ANTAGONISTS
C 07D 233/60	EP 2076261*	MUSCARINIC RECEPTOR ANTAGONISTS
C 07D 233/61	EP 1924554*	SULPHONAMIDE DERIVATIVES
C 07D 233/61	EP 1942899*	MITOTIC KINESIN INHIBITORS
C 07D 233/70	EP 1831185*	TRIAZOLONE, TETRAZOLONE AND IMIDAZOLONE DERIVATIVES FOR USE AS ALPHA-2C ADRENORECEPTOR ANTAGONISTS
C 07D 233/90	EP 1942899*	MITOTIC KINESIN INHIBITORS
C 07D 235/02	EP 1732532*	NOVEL PHARMACEUTICAL COMPOSITIONS COMPRISING AGONISTS OF THE THYROID RECEPTOR
C 07D 235/08	EP 1904454*	PROCESS FOR THE PRODUCTION OF INTERMADIATES FOR THE PREPARATION OF TRICYCLIC BENZIMIDAZOLES
C 07D 235/10	EP 1732900*	ACRYLONITRILE DERIVATIVES FOR INFLAMMATION AND IMMUNE-RELATED USES
C 07D 237/14	EP 1864663	PREVENTIVE AND/OR THERAPEUTIC AGENT FOR RHEUMATOID ARTHRITIS
C 07D 239/22	EP 2061770*	PIPERAZINE COMPOUNDS WITH HERBICIDAL ACTION
C 07D 239/24	EP 1879864*	FLUORINATED PYRIDINE N-OXIDE THROMBIN MODULATORS AND PROCESS FOR N-OXIDATION OF NITROGEN CONTAINING HETEROARYLS
C 07D 239/49	EP 2061770*	PIPERAZINE COMPOUNDS WITH HERBICIDAL ACTION
C 07D 239/54	EP 2061770*	PIPERAZINE COMPOUNDS WITH HERBICIDAL ACTION
C 07D 239/58	EP 2061770*	PIPERAZINE COMPOUNDS WITH HERBICIDAL ACTION
C 07D 239/70	EP 2061770*	PIPERAZINE COMPOUNDS WITH HERBICIDAL ACTION
C 07D 239/94	EP 1924568*	QUINAZOLINE DERIVATIVES USEFUL IN CANCER TREATMENT
C 07D 241/00	EP 1888570*	METHODS FOR SYNTHESIS OF DICARBAMATE COMPOUNDS AND INTERMEDIATES IN THE FORMATION THEREOF
C 07D 241/00	EP 2001476*	BENZOIMIDAZOLYL-PARAZINE COMPOUNDS FOR INFLAMMATION AND IMMUNE-RELATED USES

(51)	Број објаве европске пријаве патента	(51)
C 07D 241/02	EP 2001476*	BENZOIMIDAZOLYL-PARAZINE COMPOUNDS FOR INFLAMMATION AND IMMUNE-RELATED USES
C 07D 241/08	EP 1817294*	1,2,3,4-TETRAHYDROPYRAZIN-2-YL ACETAMIDES AND THEIR USE AS BRADYKININ ANTAGONISTS FOR THE TREATMENT OF INFLAMMATION RELATED DISORDERS
C 07D 241/10	EP 1879864*	FLUORINATED PYRIDINE N-OXIDE THROMBIN MODULATORS AND PROCESS FOR N-OXIDATION OF NITROGEN CONTAINING HETEROARYLS
C 07D 243/08	EP 1817294*	1,2,3,4-TETRAHYDROPYRAZIN-2-YL ACETAMIDES AND THEIR USE AS BRADYKININ ANTAGONISTS FOR THE TREATMENT OF INFLAMMATION RELATED DISORDERS
C 07D 249/12	EP 1831185*	TRIAZOLONE, TETRAZOLONE AND IMIDAZOLONE DERIVATIVES FOR USE AS ALPHA-2C ADRENORECEPTOR ANTAGONISTS
C 07D 257/04	EP 1831185*	TRIAZOLONE, TETRAZOLONE AND IMIDAZOLONE DERIVATIVES FOR USE AS ALPHA-2C ADRENORECEPTOR ANTAGONISTS
C 07D 261/08	EP 1924554*	SULPHONAMIDE DERIVATIVES
C 07D 261/08	EP 1966170*	ESTROGEN MODULATORS
C 07D 261/10	EP 1924554*	SULPHONAMIDE DERIVATIVES
C 07D 263/32	EP 1924554*	SULPHONAMIDE DERIVATIVES
C 07D 265/02	EP 1902049*	NON-STEROIDAL PROGESTERONE RECEPTOR MODULATORS
C 07D 275/03	EP 1838686*	DERIVATIVES OF ISOTHIAZOL-3(2H)-ONE 1,1-DIOXIDES AS LIVER X RECEPTOR MODULATORS
C 07D 277/46	EP 2048137	Benzamide derivatives and their use as glucokinase activating agents.
C 07D 295/04	EP 2024359*	COMPOUNDS THAT ARE AGONISTS OF MUSCARINIC RECEPTORS AND THAT MAY BE EFFECTIVE IN TREATING PAIN, ALZHEIMER'S DECEASE AND/OR SCHIZOPHRENIA
C 07D 295/13	EP 1924554*	SULPHONAMIDE DERIVATIVES
C 07D 295/155	EP 2314567	Inhibitors of the microsomal prostaglandin E2 synthase-1
C 07D 295/192	EP 1924554*	SULPHONAMIDE DERIVATIVES
C 07D 307/02	EP 1732532*	NOVEL PHARMACEUTICAL COMPOSITIONS COMPRISING AGONISTS OF THE THYROID RECEPTOR
C 07D 307/58	EP 1740225*	CONTRAST AGENTS FOR MYOCARDIAL PERFUSION IMAGING
C 07D 307/77	EP 1867642	AGENT FOR PREVENTION OR TREATMENT OF NOCTURNAL BEHAVIORAL DISORDER ASSOCIATED WITH DEMENTIA
C 07D 307/93	EP 1891073*	NOVEL SUBSTITUTED TETRACYCLIC TETRAHYDROFURAN, PYRROLIDINE AND TETRAHYDROTHIOPHENE DERIVATIVES AND THEIR USE AS A MEDICAMENT
C 07D 311/08	EP 1732532*	NOVEL PHARMACEUTICAL COMPOSITIONS COMPRISING AGONISTS OF THE THYROID RECEPTOR
C 07D 311/10	EP 1732532*	NOVEL PHARMACEUTICAL COMPOSITIONS COMPRISING AGONISTS OF THE THYROID RECEPTOR
C 07D 311/14	EP 1732532*	NOVEL PHARMACEUTICAL COMPOSITIONS COMPRISING AGONISTS OF THE THYROID RECEPTOR
C 07D 311/22	EP 1740225*	CONTRAST AGENTS FOR MYOCARDIAL PERFUSION IMAGING
C 07D 311/30	EP 2185533*	QUERCETIN DERIVATIVES AS ANTI-CANCER AGENTS
C 07D 311/58	EP 1740225*	CONTRAST AGENTS FOR MYOCARDIAL PERFUSION IMAGING
C 07D 311/70	EP 1740225*	CONTRAST AGENTS FOR MYOCARDIAL PERFUSION IMAGING

(51)	Број објаве европске пријаве патента	(51)
C 07D 311/94	EP 1891073*	NOVEL SUBSTITUTED TETRACYCLIC TETRAHYDROFURAN, PYRROLIDINE AND TETRAHYDROTHIOPHENE DERIVATIVES AND THEIR USE AS A MEDICAMENT
C 07D 313/12	EP 2004621*	POLYMORPHIC FORMS OF OLOPATADINE HYDROCHLORIDE AND METHODS FOR PRODUCING OLOPATADINE AND SALTS THEREOF
C 07D 317/00	EP 1888570*	METHODS FOR SYNTHESIS OF DICARBAMATE COMPOUNDS AND INTERMEDIATES IN THE FORMATION THEREOF
C 07D 333/02	EP 1888570*	METHODS FOR SYNTHESIS OF DICARBAMATE COMPOUNDS AND INTERMEDIATES IN THE FORMATION THEREOF
C 07D 333/38	EP 2314567	Inhibitors of the microsomal prostaglandin E2 synthase-1
C 07D 333/80	EP 1891073*	NOVEL SUBSTITUTED TETRACYCLIC TETRAHYDROFURAN, PYRROLIDINE AND TETRAHYDROTHIOPHENE DERIVATIVES AND THEIR USE AS A MEDICAMENT
C 07D 401/04	EP 1831185*	TRIAZOLONE, TETRAZOLONE AND IMIDAZOLONE DERIVATIVES FOR USE AS ALPHA-2C ADRENORECEPTOR ANTAGONISTS
C 07D 401/04	EP 1844013*	INDOLES USEFUL IN THE TREATMENT OF INFLAMMATION
C 07D 401/04	EP 1924568*	QUINAZOLINE DERIVATIVES USEFUL IN CANCER TREATMENT
C 07D 401/04	EP 2004626*	BENZIMIDAZOLYL-PYRIDINE COMPOUNDS FOR INFLAMMATION AND IMMUNE-RELATED USES
C 07D 401/06	EP 1831185*	TRIAZOLONE, TETRAZOLONE AND IMIDAZOLONE DERIVATIVES FOR USE AS ALPHA-2C ADRENORECEPTOR ANTAGONISTS
C 07D 401/06	EP 1904454*	PROCESS FOR THE PRODUCTION OF INTERMADIATES FOR THE PREPARATION OF TRICYCLIC BENZIMIDAZOLES
C 07D 401/06	EP 2061770*	PIPERAZINE COMPOUNDS WITH HERBICIDAL ACTION
C 07D 401/10	EP 1831185*	TRIAZOLONE, TETRAZOLONE AND IMIDAZOLONE DERIVATIVES FOR USE AS ALPHA-2C ADRENORECEPTOR ANTAGONISTS
C 07D 401/10	EP 2061770*	PIPERAZINE COMPOUNDS WITH HERBICIDAL ACTION
C 07D 401/12	EP 1817294*	1,2,3,4-TETRAHYDROPYRAZIN-2-YL ACETAMIDES AND THEIR USE AS BRADYKININ ANTAGONISTS FOR THE TREATMENT OF INFLAMMATION RELATED DISORDERS
C 07D 401/12	EP 1844013*	INDOLES USEFUL IN THE TREATMENT OF INFLAMMATION
C 07D 401/12	EP 1851202*	PYRIDYL ACETIC ACID COMPOUNDS
C 07D 401/12	EP 1879887*	NPY ANTAGONISTS, PREPARATION AND USE
C 07D 401/12	EP 1924568*	QUINAZOLINE DERIVATIVES USEFUL IN CANCER TREATMENT
C 07D 401/12	EP 1963306*	ESOMEPRAZOLE ARGININE
C 07D 401/12	EP 2024359*	COMPOUNDS THAT ARE AGONISTS OF MUSCARINIC RECEPTORS AND THAT MAY BE EFFECTIVE IN TREATING PAIN, ALZHEIMER'S DECEASE AND/OR SCHIZOPHRENIA
C 07D 401/12	EP 2173715*	USE OF PIPERIDINE DERIVATIVES AS AGONISTS OF CHEMOKINE RECEPTOR ACTIVITY
C 07D 401/14	EP 1831185*	TRIAZOLONE, TETRAZOLONE AND IMIDAZOLONE DERIVATIVES FOR USE AS ALPHA-2C ADRENORECEPTOR ANTAGONISTS
C 07D 401/14	EP 1844013*	INDOLES USEFUL IN THE TREATMENT OF INFLAMMATION
C 07D 401/14	EP 1851202*	PYRIDYL ACETIC ACID COMPOUNDS

(51)	Број објаве европске пријаве патента	(51)
C 07D 401/14	EP 2024359*	COMPOUNDS THAT ARE AGONISTS OF MUSCARINIC RECEPTORS AND THAT MAY BE EFFECTIVE IN TREATING PAIN, ALZHEIMER'S DECEASE AND/OR SCHIZOPHRENIA
C 07D 403/04	EP 1924568*	QUINAZOLINE DERIVATIVES USEFUL IN CANCER TREATMENT
C 07D 403/04	EP 2061770*	PIPERAZINE COMPOUNDS WITH HERBICIDAL ACTION
C 07D 403/10	EP 1831185*	TRIAZOLONE, TETRAZOLONE AND IMIDAZOLONE DERIVATIVES FOR USE AS ALPHA-2C ADRENORECEPTOR ANTAGONISTS
C 07D 403/10	EP 2061770*	PIPERAZINE COMPOUNDS WITH HERBICIDAL ACTION
C 07D 403/12	EP 1817294*	1,2,3,4-TETRAHYDROPYRAZIN-2-YL ACETAMIDES AND THEIR USE AS BRADYKININ ANTAGONISTS FOR THE TREATMENT OF INFLAMMATION RELATED DISORDERS
C 07D 403/12	EP 1924568*	QUINAZOLINE DERIVATIVES USEFUL IN CANCER TREATMENT
C 07D 403/12	EP 2029581*	P38 INHIBITORS AND METHODS OF USE THEREOF
C 07D 403/12	EP 2029581*	P38 INHIBITORS AND METHODS OF USE THEREOF
C 07D 403/12	EP 2048137	Benzamide derivatives and their use as glucokinase activating agents.
C 07D 405/04	EP 1987005*	NEW PYRIDIN-3-AMINE DERIVATIVES
C 07D 405/04	EP 2061770*	PIPERAZINE COMPOUNDS WITH HERBICIDAL ACTION
C 07D 405/12	EP 1817294*	1,2,3,4-TETRAHYDROPYRAZIN-2-YL ACETAMIDES AND THEIR USE AS BRADYKININ ANTAGONISTS FOR THE TREATMENT OF INFLAMMATION RELATED DISORDERS
C 07D 405/12	EP 1844013*	INDOLES USEFUL IN THE TREATMENT OF INFLAMMATION
C 07D 405/12	EP 1851202*	PYRIDYL ACETIC ACID COMPOUNDS
C 07D 405/12	EP 1924568*	QUINAZOLINE DERIVATIVES USEFUL IN CANCER TREATMENT
C 07D 405/14	EP 1817294*	1,2,3,4-TETRAHYDROPYRAZIN-2-YL ACETAMIDES AND THEIR USE AS BRADYKININ ANTAGONISTS FOR THE TREATMENT OF INFLAMMATION RELATED DISORDERS
C 07D 405/14	EP 1831185*	TRIAZOLONE, TETRAZOLONE AND IMIDAZOLONE DERIVATIVES FOR USE AS ALPHA-2C ADRENORECEPTOR ANTAGONISTS
C 07D 405/14	EP 1983986*	PIPERIDINE DERIVATIVES AS CXCR3 RECEPTOR ANTAGONISTS
C 07D 409/04	EP 1732900*	ACRYLONITRILE DERIVATIVES FOR INFLAMMATION AND IMMUNE-RELATED USES
C 07D 409/04	EP 1987005*	NEW PYRIDIN-3-AMINE DERIVATIVES
C 07D 409/06	EP 1904454*	PROCESS FOR THE PRODUCTION OF INTERMADIATES FOR THE PREPARATION OF TRICYCLIC BENZIMIDAZOLES
C 07D 409/12	EP 1817294*	1,2,3,4-TETRAHYDROPYRAZIN-2-YL ACETAMIDES AND THEIR USE AS BRADYKININ ANTAGONISTS FOR THE TREATMENT OF INFLAMMATION RELATED DISORDERS
C 07D 409/12	EP 1851202*	PYRIDYL ACETIC ACID COMPOUNDS
C 07D 409/12	EP 1924568*	QUINAZOLINE DERIVATIVES USEFUL IN CANCER TREATMENT
C 07D 409/12	EP 2173715*	USE OF PIPERIDINE DERIVATIVES AS AGONISTS OF CHEMOKINE RECEPTOR ACTIVITY
C 07D 409/14	EP 1983986*	PIPERIDINE DERIVATIVES AS CXCR3 RECEPTOR ANTAGONISTS
C 07D 411/04	EP 2227478*	PROCESS AND INTERMEDIATES FOR THE PREPARATION OF SUBSTITUTED 1, 3-OXATHIOLANES, ESPECIALLY LAMIVUDINE
C 07D 413/00	EP 1888570*	METHODS FOR SYNTHESIS OF DICARBAMATE COMPOUNDS AND INTERMEDIATES IN THE FORMATION THEREOF
C 07D 413/06	EP 1942899*	MITOTIC KINESIN INHIBITORS

(51)	Број објаве европске пријаве патента	(51)
C 07D 413/08	EP 1966170*	ESTROGEN MODULATORS
C 07D 413/10	EP 2061770*	PIPERAZINE COMPOUNDS WITH HERBICIDAL ACTION
C 07D 413/12	EP 1851202*	PYRIDYL ACETIC ACID COMPOUNDS
C 07D 413/12	EP 1879887*	NPY ANTAGONISTS, PREPARATION AND USE
C 07D 413/12	EP 1902049*	NON-STEROIDAL PROGESTERONE RECEPTOR MODULATORS
C 07D 413/12	EP 1924568*	QUINAZOLINE DERIVATIVES USEFUL IN CANCER TREATMENT
C 07D 413/12	EP 1966170*	ESTROGEN MODULATORS
C 07D 413/12	EP 2173715*	USE OF PIPERIDINE DERIVATIVES AS AGONISTS OF CHEMOKINE RECEPTOR ACTIVITY
C 07D 413/14	EP 1966170*	ESTROGEN MODULATORS
C 07D 413/14	EP 1983986*	PIPERIDINE DERIVATIVES AS CXCR3 RECEPTOR ANTAGONISTS
C 07D 417/08	EP 1966170*	ESTROGEN MODULATORS
C 07D 417/10	EP 2061770*	PIPERAZINE COMPOUNDS WITH HERBICIDAL ACTION
C 07D 417/12	EP 1797083*	SULFONAMIDE COMPOUNDS
C 07D 417/12	EP 1838686*	DERIVATIVES OF ISOTHIAZOL-3(2H)-ONE 1,1-DIOXIDES AS LIVER X RECEPTOR MODULATORS
C 07D 417/12	EP 1851202*	PYRIDYL ACETIC ACID COMPOUNDS
C 07D 417/12	EP 1858893*	1,3-THIAZOLE-5-CARBOXAMIDES USEFUL AS CANCER CHEMOTHERAPEUTIC AGENTS
C 07D 417/12	EP 1879887*	NPY ANTAGONISTS, PREPARATION AND USE
C 07D 417/12	EP 1924568*	QUINAZOLINE DERIVATIVES USEFUL IN CANCER TREATMENT
C 07D 417/12	EP 2013203*	Process for the preparation of 5-(2-bromoethyl)-6-chloro-1,3-dihydro-2H-indol-2-one
C 07D 417/12	EP 2048137	Benzamide derivatives and their use as glucokinase activating agents.
C 07D 417/12	EP 2173715*	USE OF PIPERIDINE DERIVATIVES AS AGONISTS OF CHEMOKINE RECEPTOR ACTIVITY
C 07D 417/14	EP 1858893*	1,3-THIAZOLE-5-CARBOXAMIDES USEFUL AS CANCER CHEMOTHERAPEUTIC AGENTS
C 07D 419/12	EP 1797083*	SULFONAMIDE COMPOUNDS
C 07D 453/06	EP 1879887*	NPY ANTAGONISTS, PREPARATION AND USE
C 07D 471/04	EP 1776368*	INHIBITORS OF HCV REPLICATION
C 07D 471/04	EP 1942899*	MITOTIC KINESIN INHIBITORS
C 07D 471/08	EP 1879887*	NPY ANTAGONISTS, PREPARATION AND USE
C 07D 471/08	EP 2088149	PHARMACOLOGICALLY ACTIVE N,N'-SUBSTITUTED 3,7-DIAZABICYCLO [3.3.1]NONANES, PHARMACEUTICAL COMPOSITIONS BASED THEREON AND A METHOD FOR THE USE THEREOF
C 07D 471/10	EP 1899338*	SPIRO-BENZIMIDAZOLES AS INHIBITORS OF GASTRIC ACID SECRETION
C 07D 471/10	EP 1973914*	TRANSFORMING GROWTH FACTOR MODULATORS
C 07D 471/14	EP 1776368*	INHIBITORS OF HCV REPLICATION
C 07D 471/14	EP 1976519*	CYTISINE AND ACETYLCHOLINE ANALOGS AND METHODS OF TREATING MOOD DISORDERS
C 07D 471/14	EP 2061770*	PIPERAZINE COMPOUNDS WITH HERBICIDAL ACTION
C 07D 471/16	EP 2183251*	INDAZOLE COMPOUNDS FOR TREATING INFLAMMATORY DISORDERS, DEMYELINATING DISORDERS AND CANCERS
C 07D 471/22	EP 2102209*	NOVEL TRIAZABENZO[A]NAPHTHO[2,1,8-cde]AZULENE DERIVATIVES, METHOD FOR PREPARING THE SAME AND PHARMACEUTICAL COMPOSITIONS CONTAINING THE SAME
C 07D 487/04	EP 1776368*	INHIBITORS OF HCV REPLICATION
C 07D 487/04	EP 1891073*	NOVEL SUBSTITUTED TETRACYCLIC TETRAHYDROFURAN, PYRROLIDINE AND TETRAHYDROTHIOPHENE DERIVATIVES AND THEIR USE AS A MEDICAMENT

(51)	Број објаве европске пријаве патента	(51)
C 07D 487/04	EP 2061770*	PIPERAZINE COMPOUNDS WITH HERBICIDAL ACTION
C 07D 487/04	EP 2102211*	HETEROBICYCLIC METALLOPROTEASE INHIBITORS
C 07D 487/08	EP 2048137	Benzamide derivatives and their use as glucokinase activating agents.
C 07D 487/10	EP 1973914*	TRANSFORMING GROWTH FACTOR MODULATORS
C 07D 487/14	EP 1765827*	A METHOD FOR PREPARING PYRROLOTRIAZINE COMPOUNDS
C 07D 487/14	EP 1776368*	INHIBITORS OF HCV REPLICATION
C 07D 487/22	EP 1740094*	PYRIDYL-SUBSTITUTED PORPHYRIN COMPOUNDS AND METHODS OF USE THEREOF
C 07D 491/04	EP 1891073*	NOVEL SUBSTITUTED TETRACYCLIC TETRAHYDROFURAN, PYRROLIDINE AND TETRAHYDROTHIOPHENE DERIVATIVES AND THEIR USE AS A MEDICAMENT
C 07D 491/04	EP 1904454*	PROCESS FOR THE PRODUCTION OF INTERMADIATES FOR THE PREPARATION OF TRICYCLIC BENZIMIDAZOLES
C 07D 491/04	EP 2125825*	ABCA1 ELEVATING COMPOUNDS
C 07D 491/10	EP 2061770*	PIPERAZINE COMPOUNDS WITH HERBICIDAL ACTION
C 07D 491/14	EP 1776368*	INHIBITORS OF HCV REPLICATION
C 07D 495/04	EP 1781665*	OLANZAPINE SALTS AND THEIR CONVERSION TO OLANZAPINE FREE BASE
C 07D 495/04	EP 1851229*	TETRAHYDROPYRIDOTHIOPHENES FOR THE TREATMENT OF PROLIFERATIVE DISEASES SUCH AS CANCER
C 07D 495/04	EP 1863571*	COMPOUNDS FOR INHIBITING KSP KINESIN ACTIVITY
C 07D 498/04	EP 1942899*	MITOTIC KINESIN INHIBITORS
C 07D 498/14	EP 1776368*	INHIBITORS OF HCV REPLICATION
C 07D 498/22	EP 1871778*	FERMENTATION BROTH EXTRACTION OF K-252A
C 07D 513/04	EP 2044086*	THIAZOLOPYRIMIDINE MODULATORS OF TRPV1
C 07D 513/14	EP 1776368*	INHIBITORS OF HCV REPLICATION
C 07D 519/00	EP 1973914*	TRANSFORMING GROWTH FACTOR MODULATORS
C 07F 7/08	EP 1904454*	PROCESS FOR THE PRODUCTION OF INTERMADIATES FOR THE PREPARATION OF TRICYCLIC BENZIMIDAZOLES
C 07F 9/10	EP 2100897	Lecithin based composition and its use in food
C 07F 9/38	EP 1877414*	ALTERING THE CRYSTAL SIZE DISTRIBUTION OF N-(PHOSPHONOMETHYL) IMINODIACETIC ACID FOR IMPROVED FILTRATION AND PRODUCT QUALITY
C 07F 9/54	EP 2004621*	POLYMORPHIC FORMS OF OLOPATADINE HYDROCHLORIDE AND METHODS FOR PRODUCING OLOPATADINE AND SALTS THEREOF
C 07F 9/655	EP 2227478*	PROCESS AND INTERMEDIATES FOR THE PREPARATION OF SUBSTITUTED 1, 3-OXATHIOLANES, ESPECIALLY LAMIVUDINE
C 07F 13/00	EP 1740094*	PYRIDYL-SUBSTITUTED PORPHYRIN COMPOUNDS AND METHODS OF USE THEREOF
C 07F 13/00	EP 1841465*	STILBENE DERIVATIVES AND THEIR USE FOR BINDING AND IMAGING AMYLOID PLAQUES
C 07F 15/02	EP 1740094*	PYRIDYL-SUBSTITUTED PORPHYRIN COMPOUNDS AND METHODS OF USE THEREOF
C 07H 3/02	EP 1874788*	MONOSACCHARIDE DERIVATIVES AS ANTI-INFLAMMATORY AND/OR ANTI-CANCER AGENTS
C 07H 9/04	EP 1874788*	MONOSACCHARIDE DERIVATIVES AS ANTI-INFLAMMATORY AND/OR ANTI-CANCER AGENTS
C 07H 15/00	EP 1874788*	MONOSACCHARIDE DERIVATIVES AS ANTI-INFLAMMATORY AND/OR ANTI-CANCER AGENTS
C 07H 21/02	EP 1773857*	IMMUNOSTIMULATORY SIRNA MOLECULES AND USES THEREFOR
C 07H 21/02	EP 2001517*	REGULATED EXPRESSION OF RECOMBINANT PROTEINS FROM ADENO-ASSOCIATED VIRAL VECTORS

(51)	Број објаве европске пријаве патента	(51)
C 07H 21/04	EP 1993597*	HUMAN TELOMERASE REVERSE TRANSCRIPTASE PEPTIDES
C 07H 21/04	EP 2001517*	REGULATED EXPRESSION OF RECOMBINANT PROTEINS FROM ADENO-ASSOCIATED VIRAL VECTORS
C 07H 21/04	EP 2056849*	METHODS AND COMPOSITIONS FOR TREATING IGE-MEDIATED DISEASES
C 07J 71/00	EP 1742960*	CRYSTALLINE AND AMORPHOUS FORMS OF SMILAGENIN
C 07J 71/00	EP 1809650*	POLYMORPHS OF SARSAPOGENIN
C 07K 1/04	EP 1919956*	GELATION OF UNDENATURED PROTEINS WITH POLYSACCHARIDES
C 07K 5/02	EP 1828246*	MYD88 HOMODIMERIZATION INHIBITORS
C 07K 5/06	EP 2209796*	MACROCYCLIC INHIBITORS OF HEPATITIS C VIRUS NS3 SERINE PROTEASE
C 07K 5/078	EP 1828246*	MYD88 HOMODIMERIZATION INHIBITORS
C 07K 7/02	EP 1828246*	MYD88 HOMODIMERIZATION INHIBITORS
C 07K 7/06	EP 1846016*	METHODS OF INCREASING CEREBRAL BLOOD FLOW
C 07K 14/12	EP 2303322*	RECOMBINANT MODIFIED VACCINIA VIRUS MEASLES VACCINE
C 07K 14/18	EP 1783218	HCV RNA HAVING NOVEL SEQUENCE
C 07K 14/435	EP 1899368*	INTERFERON-IGG FUSION
C 07K 14/47	EP 1846444*	AGENTS INHIBITING THE CATHELIN-LIKE PROTEIN CAP18/LL-37
C 07K 14/475	EP 1805209*	NOGO-A POLYPEPTIDE FRAGMENTS, VARIANT NOGO RECEPTOR-1 POLYPEPTIDES, AND USES THEREOF
C 07K 14/51	EP 1891100*	SCLEROSTIN EPITOPES
C 07K 14/535	EP 1837346	Method for purifying granulocyte-colony stimulating factor
C 07K 14/705	EP 1805209*	NOGO-A POLYPEPTIDE FRAGMENTS, VARIANT NOGO RECEPTOR-1 POLYPEPTIDES, AND USES THEREOF
C 07K 14/705	EP 1828246*	MYD88 HOMODIMERIZATION INHIBITORS
C 07K 14/71	EP 2049568*	ERBB RECEPTOR-DERIVED PEPTIDE FRAGMENTS
C 07K 14/715	EP 1828246*	MYD88 HOMODIMERIZATION INHIBITORS
C 07K 14/78	EP 2241323	Tenascin-W and brain cancers
C 07K 16/00	EP 1807450*	METHOD OF SELECTION OF ANTI HIV-1-gp41 NEUTRALIZING HUMAN MONOCLONAL ANTIBODIES
C 07K 16/00	EP 1940878*	EXPRESSION CONTROL USING ANTIBODY EXPRESSION OPTIMISATION SEQUENCES
C 07K 16/00	EP 2056849*	METHODS AND COMPOSITIONS FOR TREATING IGE-MEDIATED DISEASES
C 07K 16/10	EP 1783218	HCV RNA HAVING NOVEL SEQUENCE
C 07K 16/10	EP 1807450*	METHOD OF SELECTION OF ANTI HIV-1-gp41 NEUTRALIZING HUMAN MONOCLONAL ANTIBODIES
C 07K 16/18	EP 1846444*	AGENTS INHIBITING THE CATHELIN-LIKE PROTEIN CAP18/LL-37
C 07K 16/28	EP 1740208*	MONOCLONAL ANTIBODIES SPECIFIC FOR HUMAN OX40L (CD134L)
C 07K 16/28	EP 1851249*	CD20 ANTIBODY VARIANTS AND USES THEREOF
C 07K 16/28	EP 1940878*	EXPRESSION CONTROL USING ANTIBODY EXPRESSION OPTIMISATION SEQUENCES
C 07K 16/28	EP 1984404*	METHODS AND COMPOSITIONS FOR TARGETING RELT
C 07K 16/28	EP 2152751*	FUSION OR LINKED PROTEINS WITH EXTENDED HALF LIFE
C 07K 16/28	EP 2160411*	ANTI-VPAC1 ANTIBODIES AND THEIR USES
C 07K 16/30	EP 1910419*	COMPOSITIONS AND METHODS FOR THE DIAGNOSIS AND TREATMENT OF TUMOR
C 07K 16/30	EP 2241323	Tenascin-W and brain cancers
C 07K 16/46	EP 1960435*	DOMAIN-GRAFTED ANTIBODIES
C 07K 16/46	EP 2160411*	ANTI-VPAC1 ANTIBODIES AND THEIR USES
C 07K 17/04	EP 1919956*	GELATION OF UNDENATURED PROTEINS WITH POLYSACCHARIDES

(51)	Број објаве европске пријаве патента	(51)
C 07K 17/10	EP 1919956*	GELATION OF UNDENATURED PROTEINS WITH POLYSACCHARIDES
C 08G 73/02	EP 2016114*	AMINE CONDENSATION POLYMERS AS PHOSPHATE SEQUESTRANTS
C 08J 3/075	EP 1919956*	GELATION OF UNDENATURED PROTEINS WITH POLYSACCHARIDES
C 08K 3/22	EP 2029484*	THERMALLY STABLE ALUMINUM TRIHYDROXIDE PARTICLES PRODUCED BY SPRAY DRYING WITH SUBSEQUENT DRY-MILLING AND THEIR USE
C 08K 3/34	EP 1721938	Emulsifier for bituminous binders
C 08L 1/28	EP 1919956*	GELATION OF UNDENATURED PROTEINS WITH POLYSACCHARIDES
C 08L 5/00	EP 1919956*	GELATION OF UNDENATURED PROTEINS WITH POLYSACCHARIDES
C 08L 5/04	EP 1919956*	GELATION OF UNDENATURED PROTEINS WITH POLYSACCHARIDES
C 08L 5/06	EP 1919956*	GELATION OF UNDENATURED PROTEINS WITH POLYSACCHARIDES
C 08L 5/08	EP 1919956*	GELATION OF UNDENATURED PROTEINS WITH POLYSACCHARIDES
C 08L 5/12	EP 1919956*	GELATION OF UNDENATURED PROTEINS WITH POLYSACCHARIDES
C 08L 89/00	EP 1919956*	GELATION OF UNDENATURED PROTEINS WITH POLYSACCHARIDES
C 08L 93/04	EP 1721938	Emulsifier for bituminous binders
C 08L 95/00	EP 1721938	Emulsifier for bituminous binders
C 09K 21/02	EP 2029484*	THERMALLY STABLE ALUMINUM TRIHYDROXIDE PARTICLES PRODUCED BY SPRAY DRYING WITH SUBSEQUENT DRY-MILLING AND THEIR USE
C 11B 1/10	EP 1835974*	METHOD AND APPARATUS FOR REMOVING SOLUTE FROM A SOLID SOLUTE-BEARING PRODUCT
C 12C 5/00	EP 2010654*	PROLINE-SPECIFIC PROTEASES FREE FROM AMYLOLYTIC ACTIVITIES
C 12C 5/02	EP 2004793*	TEA-FLAVORED BEER
C 12N 1/00	EP 1776174*	USE OF DEPTH FILTRATION IN SERIES WITH CONTINUOUS CENTRIFUGATION TO CLARIFY MAMMALIAN CELL CULTURES
C 12N 1/02	EP 1776174*	USE OF DEPTH FILTRATION IN SERIES WITH CONTINUOUS CENTRIFUGATION TO CLARIFY MAMMALIAN CELL CULTURES
C 12N 5/00	EP 1805297*	THE USE OF HUMAN STEM CELLS AND/OR FACTORS THEY PRODUCE TO PROMOTE ADULT MAMMALIAN CARDIAC REPAIR THROUGH CARDIOMYOCYTE CELL DIVISION
C 12N 5/00	EP 1993597*	HUMAN TELOMERASE REVERSE TRANSCRIPTASE PEPTIDES
C 12N 5/02	EP 1805297*	THE USE OF HUMAN STEM CELLS AND/OR FACTORS THEY PRODUCE TO PROMOTE ADULT MAMMALIAN CARDIAC REPAIR THROUGH CARDIOMYOCYTE CELL DIVISION
C 12N 5/02	EP 1841856*	A METHOD OF CRYOPRESERVING CELLS AND TISSUES BY LIPOSOMAL DELIVERY OF SUGARS TO ENHANCE POST-THAW VIABILITY
C 12N 5/04	EP 1846560*	NOVEL OMEGA-3 FATTY ACID DESATURASE FAMILY MEMBERS AND USES THEREOF
C 12N 5/06	EP 1812558*	IDENTIFICATION AND ISOLATION OF MULTIPOTENT CELLS FROM NON-OSTEOCHONDRAL MESENCHYMAL TISSUE
C 12N 5/06	EP 2056849*	METHODS AND COMPOSITIONS FOR TREATING IGE-MEDIATED DISEASES

(51)	Број објаве европске пријаве патента	(51)
C 12N 5/08	EP 1805297*	THE USE OF HUMAN STEM CELLS AND/OR FACTORS THEY PRODUCE TO PROMOTE ADULT MAMMALIAN CARDIAC REPAIR THROUGH CARDIOMYOCYTE CELL DIVISION
C 12N 5/08	EP 2167649*	IMMUNOTHERAPY FOR HEMATOLOGICAL MALIGNANCIES
C 12N 5/10	EP 1783218	HCV RNA HAVING NOVEL SEQUENCE
C 12N 5/10	EP 1846560*	NOVEL OMEGA-3 FATTY ACID DESATURASE FAMILY MEMBERS AND USES THEREOF
C 12N 5/20	EP 2160411*	ANTI-VPAC1 ANTIBODIES AND THEIR USES
C 12N 5/22	EP 2303322*	RECOMBINANT MODIFIED VACCINIA VIRUS MEASLES VACCINE
C 12N 5/24	EP 1910419*	COMPOSITIONS AND METHODS FOR THE DIAGNOSIS AND TREATMENT OF TUMOR
C 12N 7/00	EP 1783218	HCV RNA HAVING NOVEL SEQUENCE
C 12N 7/01	EP 2303322*	RECOMBINANT MODIFIED VACCINIA VIRUS MEASLES VACCINE
C 12N 9/02	EP 1846560*	NOVEL OMEGA-3 FATTY ACID DESATURASE FAMILY MEMBERS AND USES THEREOF
C 12N 9/62	EP 2010654*	PROLINE-SPECIFIC PROTEASES FREE FROM AMYLOLYTIC ACTIVITIES
C 12N 15/00	EP 1993597*	HUMAN TELOMERASE REVERSE TRANSCRIPTASE PEPTIDES
C 12N 15/09	EP 1783218	HCV RNA HAVING NOVEL SEQUENCE
C 12N 15/09	EP 1971686*	NUCLEOTIDE SEQUENCES AND CORRESPONDING POLYPEPTIDES CONFERRING IMPROVED NITROGEN USE EFFICIENCY CHARACTERISTICS IN PLANTS
C 12N 15/10	EP 1971686*	NUCLEOTIDE SEQUENCES AND CORRESPONDING POLYPEPTIDES CONFERRING IMPROVED NITROGEN USE EFFICIENCY CHARACTERISTICS IN PLANTS
C 12N 15/11	EP 1846444*	AGENTS INHIBITING THE CATHELIN-LIKE PROTEIN CAP18/LL-37
C 12N 15/11	EP 1899467*	MODIFIED OLIGORIBONUCLEOTIDE ANALOGS WITH ENHANCES IMMUNOSTIMULATORY ACTIVITY
C 12N 15/11	EP 2155876*	METHODS FOR ASSESSING THE DELIVERY OF SMALL INHIBITORY RNA MOLECULES
C 12N 15/11	EP 2171059*	RNAI INHIBITION OF ALPHA-ENAC EXPRESSION
C 12N 15/113	EP 1833490*	RNAI MODULATION OF RSV AND THERAPEUTIC USES THEREOF
C 12N 15/13	EP 2160411*	ANTI-VPAC1 ANTIBODIES AND THEIR USES
C 12N 15/29	EP 1971686*	NUCLEOTIDE SEQUENCES AND CORRESPONDING POLYPEPTIDES CONFERRING IMPROVED NITROGEN USE EFFICIENCY CHARACTERISTICS IN PLANTS
C 12N 15/53	EP 1846560*	NOVEL OMEGA-3 FATTY ACID DESATURASE FAMILY MEMBERS AND USES THEREOF
C 12N 15/63	EP 1740208*	MONOCLONAL ANTIBODIES SPECIFIC FOR HUMAN OX40L (CD134L)
C 12N 15/72	EP 1940878*	EXPRESSION CONTROL USING ANTIBODY EXPRESSION OPTIMISATION SEQUENCES
C 12N 15/82	EP 1846560*	NOVEL OMEGA-3 FATTY ACID DESATURASE FAMILY MEMBERS AND USES THEREOF
C 12N 15/85	EP 1871163*	TRANSGENIC MODELS FOR DIFFERENT GENES AND THEIR USE FOR GENE CHARACTERIZATION
C 12N 15/85	EP 2109680*	NOVEL GENE DISRUPTIONS, COMPOSITIONS AND METHODS RELATING THERETO
C 12N 15/863	EP 2303322*	RECOMBINANT MODIFIED VACCINIA VIRUS MEASLES VACCINE
C 12N 15/88	EP 1773857*	IMMUNOSTIMULATORY SIRNA MOLECULES AND USES THEREFOR
C 12P 7/64	EP 2100897	Lecithin based composition and its use in food

(51)	Број објаве европске пријаве патента	(51)
C 12P 21/06	EP 1951890*	METHODS AND COMPOSITIONS COMPRISING NON-NATURAL AMINO ACIDS
C 12Q 1/00	EP 1692305*	DIAGNOSIS AND TREATMENT OF DISEASES ARISING FROM DEFECTS IN THE TUBEROUS SCLEROSIS PATHWAY
C 12Q 1/02	EP 1692305*	DIAGNOSIS AND TREATMENT OF DISEASES ARISING FROM DEFECTS IN THE TUBEROUS SCLEROSIS PATHWAY
C 12Q 1/48	EP 1692305*	DIAGNOSIS AND TREATMENT OF DISEASES ARISING FROM DEFECTS IN THE TUBEROUS SCLEROSIS PATHWAY
C 12Q 1/68	EP 1732532*	NOVEL PHARMACEUTICAL COMPOSITIONS COMPRISING AGONISTS OF THE THYROID RECEPTOR
C 12Q 1/68	EP 1753876*	INTERNAL CONTROL IN SITU HYBRIDIZATION
C 12Q 1/68	EP 1783218	HCV RNA HAVING NOVEL SEQUENCE
C 12Q 1/68	EP 1846444*	AGENTS INHIBITING THE CATHELIN-LIKE PROTEIN CAP18/LL-37
C 12Q 1/68	EP 1846560*	NOVEL OMEGA-3 FATTY ACID DESATURASE FAMILY MEMBERS AND USES THEREOF
C 12Q 1/68	EP 1957675*	SYSTEMS AND METHODS FOR THE BIOMETRIC ANALYSIS OF INDEX FOUNDER POPULATIONS
C 12Q 1/68	EP 1993573*	SYSTEMS AND METHODS FOR MONITORING IMMUNE RESPONSES AND PREDICTING OUTCOMES IN TRANSPLANT RECIPIENTS
C 12Q 1/68	EP 1999274*	METHODS AND SYSTEMS FOR EVALUATING HEALTH RISK FACTORS BY MEASUREMENT OF DNA DAMAGE AND DNA REPAIR
C 12Q 1/68	EP 2064351*	PHENOTYPIC AND GENOTYPIC DIFFERENCES OF MVA STRAINS
C 12Q 1/68	EP 2079852*	SNP DETECTION AND OTHER METHODS FOR CHARACTERIZING AND TREATING BIPOLAR DISORDER AND OTHER AILMENTS
C 12Q 1/68	EP 2126113*	DIAGNOSTIC MARKER AND PLATFORM FOR DRUG DESIGN IN MYOCARDIAL INFARCTION AND HEART FAILURE
C 12Q 1/70	EP 2064351*	PHENOTYPIC AND GENOTYPIC DIFFERENCES OF MVA STRAINS
C 21D 1/40	EP 2000004*	METHOD AND APPARATUS FOR THE UNIFORM RESISTANCE HEATING OF ARTICLES
C 25C 3/12	EP 1828439*	PROTECTIVE ANODE COATINGS
C 25C 7/02	EP 1828439*	PROTECTIVE ANODE COATINGS
D 04B 21/14	EP 2115197*	ELASTIC INSERT, METHOD FOR THE PRODUCTION THEREOF AND USE
D 06M 11/83	EP 1737312*	METHOD FOR MANUFACTURING A YARN OF PRECIOUS METAL, APPARATUS, COMPOSITE YARN AND FRAME
E 01C 5/22	EP 1885955*	STRUCTURAL UNIT
E 01C 7/08	EP 1893812*	CARRIAGEWAY AND SURFACE FOR CARRIAGEWAYS
E 01C 7/30	EP 1893812*	CARRIAGEWAY AND SURFACE FOR CARRIAGEWAYS
E 01C 7/32	EP 1893812*	CARRIAGEWAY AND SURFACE FOR CARRIAGEWAYS
E 01F 9/04	EP 1885955*	STRUCTURAL UNIT
E 01H 12/00	EP 1740507*	IMPROVED MODIFIED SUBSTRATE FOR REMOVING AQUEOUS OXYANIONS
E 01H 15/00	EP 1740507*	IMPROVED MODIFIED SUBSTRATE FOR REMOVING AQUEOUS OXYANIONS
E 02D 29/14	EP 1885955*	STRUCTURAL UNIT
E 03F 5/06	EP 1885955*	STRUCTURAL UNIT
E 04B 1/19	EP 2140150*	VARIABLE AND FIXED JOINTS-NODES WITH EMBEDDED 2-PART MECHANICAL CONNECTOR FOR LATERAL INTERCONNECTION OF TUBES RODS BEAMS FOR CONSTRUCTION OF TRUSSES

(51)	Број објаве европске пријаве патента	(51)
E 04F 15/16	EP 2040907*	INSTALLATION METHOD FOR NON-SLIP SANITARY FLOORING
E 04H 7/00	EP 1971726*	A MULTI-FORM SILO STORAGE SYSTEM
E 04H 12/18	EP 2140150*	VARIABLE AND FIXED JOINTS-NODES WITH EMBEDDED 2-PART MECHANICAL CONNECTOR FOR LATERAL INTERCONNECTION OF TUBES RODS BEAMS FOR CONSTRUCTION OF TRUSSES
E 04H 12/22	EP 2112300	Foundation body, method for producing a foundation body and method for setting up a mast
E 05B 19/02	EP 2031160	Lock-key combination
E 05B 19/06	EP 2031160	Lock-key combination
E 06B 9/17	EP 1736631	Roller shutter box
E 06B 9/86	EP 1584782	Method, locking system and locking mechanism to automatically lock a roller shutter
F 02M 59/06	EP 2113653	Fluid Pump
F 02M 59/10	EP 2113653	Fluid Pump
F 04B 53/00	EP 2113653	Fluid Pump
F 04B 53/08	EP 2113653	Fluid Pump
F 04B 53/18	EP 2113653	Fluid Pump
F 16B 2/14	EP 1718875*	CONNECTING UNIT
F 16B 5/06	EP 1718875*	CONNECTING UNIT
F 16B 7/18	EP 2140150*	VARIABLE AND FIXED JOINTS-NODES WITH EMBEDDED 2-PART MECHANICAL CONNECTOR FOR LATERAL INTERCONNECTION OF TUBES RODS BEAMS FOR CONSTRUCTION OF TRUSSES
F 16B 7/20	EP 2140150*	VARIABLE AND FIXED JOINTS-NODES WITH EMBEDDED 2-PART MECHANICAL CONNECTOR FOR LATERAL INTERCONNECTION OF TUBES RODS BEAMS FOR CONSTRUCTION OF TRUSSES
F 16B 21/04	EP 2140150*	VARIABLE AND FIXED JOINTS-NODES WITH EMBEDDED 2-PART MECHANICAL CONNECTOR FOR LATERAL INTERCONNECTION OF TUBES RODS BEAMS FOR CONSTRUCTION OF TRUSSES
F 16B 21/09	EP 1718875*	CONNECTING UNIT
F 16B 21/16	EP 1718875*	CONNECTING UNIT
F 16D 41/10	EP 1707837	Bi-directional overrunning clutch for a transaxle
F 16H 48/16	EP 1967764	Central differential for a working vehicle
F 16K 11/07	EP 1802901*	FLUID DISTRIBUTION AND REGULATION VALVE AND SYSTEM FOR SUPPLYING GAS DERIVED FROM TWO SOURCES COMPRISING SAME
F 16L 37/40	EP 1697676*	STEAM STOP FOR STEAM CLEANER
F 16L 55/165	EP 1948990*	FLEXIBLE INSERT TUBE FOR THE LINING OF PIPELINES AND OF DUCTS, IN PARTICULAR OF SEWERS
F 16L 55/26	EP 1735612*	ID-OD DISCRIMINATION SENSOR CONCEPT FOR A MAGNETIC FLUX LEAKAGE INSPECTION TOOL
F 21V 1/00	EP 2088363	A lamp shade made of a spiral coil spring
F 21V 11/00	EP 2088363	A lamp shade made of a spiral coil spring
F 21W 121/00	EP 2088363	A lamp shade made of a spiral coil spring
F 41G 1/00	EP 1690060*	APPARATUS AND METHOD FOR CALCULATING AIMING POINT INFORMATION
F 41H 1/08	EP 2146177	Method of making a protective structure
G 01D 5/16	EP 1797438*	SENSOR
G 01N 21/00	EP 1952121*	SYSTEM AND METHOD FOR READING A TEST STRIP
G 01N 21/75	EP 1810008*	P27 UBIQUITINATION ASSAY AND METHODS OF USE
G 01N 21/75	EP 1952121*	SYSTEM AND METHOD FOR READING A TEST STRIP
G 01N 21/76	EP 1810008*	P27 UBIQUITINATION ASSAY AND METHODS OF USE
G 01N 27/72	EP 1735612*	ID-OD DISCRIMINATION SENSOR CONCEPT FOR A MAGNETIC FLUX LEAKAGE INSPECTION TOOL
G 01N 27/82	EP 1735612*	ID-OD DISCRIMINATION SENSOR CONCEPT FOR A MAGNETIC FLUX LEAKAGE INSPECTION TOOL

(51)	Број објаве европске пријаве патента	(51)
G 01N 27/87	EP 1735612*	ID-OD DISCRIMINATION SENSOR CONCEPT FOR A MAGNETIC FLUX LEAKAGE INSPECTION TOOL
G 01N 33/00	EP 1871163*	TRANSGENIC MODELS FOR DIFFERENT GENES AND THEIR USE FOR GENE CHARACTERIZATION
G 01N 33/38	EP 1687625*	METHOD, APPARATUS AND SYSTEM FOR FORECASTING STRENGTH OF CEMENTITIOUS MATERIAL
G 01N 33/48	EP 1745391*	SYTEMS AND METHODS FOR IMPROVING LIVESTOCK PRODUCTION
G 01N 33/53	EP 1810008*	P27 UBIQUITINATION ASSAY AND METHODS OF USE
G 01N 33/53	EP 1846444*	AGENTS INHIBITING THE CATHELIN-LIKE PROTEIN CAP18/LL-37
G 01N 33/53	EP 1993573*	SYSTEMS AND METHODS FOR MONITORING IMMUNE RESPONSES AND PREDICTING OUTCOMES IN TRANSPLANT RECIPIENTS
G 01N 33/53	EP 1993597*	HUMAN TELOMERASE REVERSE TRANSCRIPTASE PEPTIDES
G 01N 33/53	EP 2056849*	METHODS AND COMPOSITIONS FOR TREATING IGE-MEDIATED DISEASES
G 01N 33/53	EP 2064547*	FETUIN-A AS A BIOMARKER FOR MULTIPLE SCLEROSIS
G 01N 33/532	EP 1810008*	P27 UBIQUITINATION ASSAY AND METHODS OF USE
G 01N 33/543	EP 1991871*	NOVEL ASSAY FOR THE DETECTION OF AN ANTIBODY BOUND TO A CELL MEMBRANE RECEPTOR
G 01N 33/564	EP 1984404*	METHODS AND COMPOSITIONS FOR TARGETING RELT
G 01N 33/564	WO 2009076359	MODULATORS OF NEURONAL REGENERATION
G 01N 33/566	EP 1991871*	NOVEL ASSAY FOR THE DETECTION OF AN ANTIBODY BOUND TO A CELL MEMBRANE RECEPTOR
G 01N 33/569	EP 1984404*	METHODS AND COMPOSITIONS FOR TARGETING RELT
G 01N 33/573	EP 1810008*	P27 UBIQUITINATION ASSAY AND METHODS OF USE
G 01N 33/574	EP 1910419*	COMPOSITIONS AND METHODS FOR THE DIAGNOSIS AND TREATMENT OF TUMOR
G 01N 33/574	EP 1984404*	METHODS AND COMPOSITIONS FOR TARGETING RELT
G 01N 33/574	EP 1991871*	NOVEL ASSAY FOR THE DETECTION OF AN ANTIBODY BOUND TO A CELL MEMBRANE RECEPTOR
G 01N 33/577	EP 1991871*	NOVEL ASSAY FOR THE DETECTION OF AN ANTIBODY BOUND TO A CELL MEMBRANE RECEPTOR
G 01N 33/68	EP 1984404*	METHODS AND COMPOSITIONS FOR TARGETING RELT
G 01N 33/68	EP 1991871*	NOVEL ASSAY FOR THE DETECTION OF AN ANTIBODY BOUND TO A CELL MEMBRANE RECEPTOR
G 01N 33/68	WO 2009076359	MODULATORS OF NEURONAL REGENERATION
G 01N 33/74	EP 2030025*	MARKERS ASSOCIATED WITH ARTERIOVASCULAR EVENTS AND METHODS OF USE THEREOF
G 01N 33/78	EP 1732532*	NOVEL PHARMACEUTICAL COMPOSITIONS COMPRISING AGONISTS OF THE THYROID RECEPTOR
G 01R 17/10	EP 1797438*	SENSOR
G 01R 31/3187	EP 2145196*	IC TESTING METHODS AND APPARATUS
G 01R 33/09	EP 1797438*	SENSOR
G 01R 33/12	EP 1735612*	ID-OD DISCRIMINATION SENSOR CONCEPT FOR A MAGNETIC FLUX LEAKAGE INSPECTION TOOL
G 01S 11/10	EP 2103956	Estimation of the speed of a mobile device
G 02C 11/00	EP 1852729	Anti-theft device for eyeglasses
G 05B 9/02	EP 1854062*	SYSTEM FOR DYNAMIC AD SELECTION AND PLACEMENT WITHIN A VOICE APPLICATION ACCESSED THROUGH AN ELECTRONIC INFORMATION PAGE
G 05F 1/67	EP 1938439*	METHOD AND APPARATUS FOR CHARGING A BATTERY FROM A COMPLEX DIRECT CURRENT SOURCE
G 06F 3/00	EP 1857912	Tactile feedback system and method for a mobile communication device having a trackball
G 06F 3/023	EP 1921836	Handheld electronic device having selectable language indicator for language selection and method therefor
G 06F 3/033	EP 1797438*	SENSOR
G 06F 3/044	EP 2085861	Electronic device and touch screen display

(51)	Број објаве европске пријаве патента	(51)
G 06F 3/048	EP 2133781	System and method for providing tactile feedback to a user of an electronic device
G 06F 3/14	EP 1774430*	USER INTERFACE GENERATION WITH PARAMETRIC IMAGE DIVISION
G 06F 9/44	EP 1774430*	USER INTERFACE GENERATION WITH PARAMETRIC IMAGE DIVISION
G 06F 9/44	EP 1872207*	SYSTEM AND METHOD OF PRESENTING ENTITIES OF STANDARD DEVICE APPLICATIONS IN WIRELESS DEVICES
G 06F 9/44	EP 1872254*	SYSTEM AND METHOD OF REPRESENTING DATA ENTITIES OF STANDARD DEVICE APPLICATIONS AS BUILT-IN COMPONENTS
G 06F 9/44	EP 1921836	Handheld electronic device having selectable language indicator for language selection and method therefor
G 06F 9/44	EP 1978441	System and method for updating reference to a data-source in a component-based application
G 06F 9/44	EP 1990715	System, apparatus and method for programming a computing device
G 06F 9/455	EP 1872254*	SYSTEM AND METHOD OF REPRESENTING DATA ENTITIES OF STANDARD DEVICE APPLICATIONS AS BUILT-IN COMPONENTS
G 06F 12/02	EP 1846828*	DATA PROCESSING SYSTEM AND METHOD FOR MEMORY DEFRAGMENTATION
G 06F 15/02	EP 1872207*	SYSTEM AND METHOD OF PRESENTING ENTITIES OF STANDARD DEVICE APPLICATIONS IN WIRELESS DEVICES
G 06F 15/16	EP 1854062*	SYSTEM FOR DYNAMIC AD SELECTION AND PLACEMENT WITHIN A VOICE APPLICATION ACCESSED THROUGH AN ELECTRONIC INFORMATION PAGE
G 06F 17/00	EP 1745391*	SYTEMS AND METHODS FOR IMPROVING LIVESTOCK PRODUCTION
G 06F 17/00	EP 1872254*	SYSTEM AND METHOD OF REPRESENTING DATA ENTITIES OF STANDARD DEVICE APPLICATIONS AS BUILT-IN COMPONENTS
G 06F 17/00	EP 1999634*	SYSTEMS AND METHODS FOR DOCUMENT ANNOTATION
G 06F 17/30	EP 2096562	Enhanced browser navigation
G 06F 19/00	EP 1745391*	SYTEMS AND METHODS FOR IMPROVING LIVESTOCK PRODUCTION
G 06F 19/00	EP 2100246*	BIOMETRIC ANALYSIS OF POPULATIONS DEFINED BY HOMOZYGOUS MARKER TRACK LENGTH
G 06F 21/00	EP 1834437*	METHOD AND APPARATUS FOR PROVIDING A SECURE MOVE OF A DECRYPTION CONTENT KEY
G 06K 5/00	EP 1728189*	SYSTEM AND METHOD FOR CONTROLLING ACCESS AND USE OF PATIENT MEDICAL DATA RECORDS
G 06K 11/00	EP 1797438*	SENSOR
G 06Q 20/00	EP 1848549*	METHOD AND DEVICE FOR DISPENSING AND PURCHASING CUSTOMIZED GIFT CARDS
G 06Q 40/00	EP 1844433*	INVOICE FINANCING
G 06Q 50/00	EP 1957675*	SYSTEMS AND METHODS FOR THE BIOMETRIC ANALYSIS OF INDEX FOUNDER POPULATIONS
G 06Q 99/00	EP 1839259*	A SYSTEM AND METHOD OF PROCESSING ENTITLEMENT RULES, OFFERING AND DELIVERING DIGITAL CONTENT
G 09F 15/00	EP 1866898*	A COUNTER
G 10L 15/18	EP 1889253*	A METHOD AND SYSTEM FOR ANALYZING SEPARATED VOICE DATA OF A TELEPHONIC COMMUNICATION BETWEEN A CUSTOMER AND A CONTACT CENTER BY APPLYING A PSYCHOLOGICAL BEHAVIORAL MODEL THERETO

(51)	Број објаве европске пријаве патента	(51)
G 10L 15/26	EP 1889253*	A METHOD AND SYSTEM FOR ANALYZING SEPARATED VOICE DATA OF A TELEPHONIC COMMUNICATION BETWEEN A CUSTOMER AND A CONTACT CENTER BY APPLYING A PSYCHOLOGICAL BEHAVIORAL MODEL THERETO
G 11B 27/00	EP 2106661*	SYSTEMS AND METHODS FOR PRODUCTION, DELIVERY, RECORDING, AND VIEWING OF VIDEO AND SIMILAR CONTENT PRIMARILY INTENDED TO BE VIEWED IN STEP-FRAME/FRAME-ADVANCE MODE
G 11B 27/10	EP 2106661*	SYSTEMS AND METHODS FOR PRODUCTION, DELIVERY, RECORDING, AND VIEWING OF VIDEO AND SIMILAR CONTENT PRIMARILY INTENDED TO BE VIEWED IN STEP-FRAME/FRAME-ADVANCE MODE
G 11B 27/34	EP 2106661*	SYSTEMS AND METHODS FOR PRODUCTION, DELIVERY, RECORDING, AND VIEWING OF VIDEO AND SIMILAR CONTENT PRIMARILY INTENDED TO BE VIEWED IN STEP-FRAME/FRAME-ADVANCE MODE
G 11C 16/04	EP 2024978*	SONOS MEMORY DEVICE AND METHOD OF OPERATING A SONOS MEMORY DEVICE
G 11C 16/10	EP 2024978*	SONOS MEMORY DEVICE AND METHOD OF OPERATING A SONOS MEMORY DEVICE
H 01L 21/336	EP 1972005*	METHOD OF MANUFACTURING A SEMICONDUCTOR DEVICE AND SEMICONDUCTOR DEVICE OBTAINED WITH SUCH A METHOD
H 01L 23/02	EP 1741134*	STACKED MODULE SYSTEMS AND METHODS
H 01L 23/528	EP 2038927*	POWER SUPPLY NETWORK
H 01R 9/24	EP 1701411	Connection box for data network
H 01R 13/658	EP 1701411	Connection box for data network
H 02J 7/34	EP 1938439*	METHOD AND APPARATUS FOR CHARGING A BATTERY FROM A COMPLEX DIRECT CURRENT SOURCE
H 02J 7/35	EP 1938439*	METHOD AND APPARATUS FOR CHARGING A BATTERY FROM A COMPLEX DIRECT CURRENT SOURCE
H 02K 21/24	EP 2064803*	AN ALTERNATOR
H 03G 5/02	EP 2031847	Method and apparatus allowing for user-selectable acoustic equalizer settings for voice calls
H 03M 7/02	EP 1696572	Method and apparatus for data encoding
H 03M 7/14	EP 1696572	Method and apparatus for data encoding
H 03M 13/11	EP 1900105*	CLASH-FREE IRREGULAR-REPEAT-ACCUMULATE CODE
H 04B 7/26	EP 1872254*	SYSTEM AND METHOD OF REPRESENTING DATA ENTITIES OF STANDARD DEVICE APPLICATIONS AS BUILT-IN COMPONENTS
H 04B 10/20	EP 1986355	Method for maintaining the compatibility of legacy receivers, optical distributing network structure and parts thereof including a method for using such a part
H 04K 1/00	EP 1834437*	METHOD AND APPARATUS FOR PROVIDING A SECURE MOVE OF A DECRYPTION CONTENT KEY
H 04K 1/00	EP 1839259*	A SYSTEM AND METHOD OF PROCESSING ENTITLEMENT RULES, OFFERING AND DELIVERING DIGITAL CONTENT
H 04L 9/00	EP 1834437*	METHOD AND APPARATUS FOR PROVIDING A SECURE MOVE OF A DECRYPTION CONTENT KEY
H 04L 9/00	EP 1839259*	A SYSTEM AND METHOD OF PROCESSING ENTITLEMENT RULES, OFFERING AND DELIVERING DIGITAL CONTENT
H 04L 9/00	EP 1989816*	METHOD AND SYSTEM FOR DETECTING UNDESIRED EMAIL CONTAINING IMAGE-BASED MESSAGES
H 04L 9/08	EP 1834437*	METHOD AND APPARATUS FOR PROVIDING A SECURE MOVE OF A DECRYPTION CONTENT KEY
H 04L 12/24	EP 2027677*	EMAIL SERVER SYSTEM AND METHOD
H 04L 12/54	EP 1989816*	METHOD AND SYSTEM FOR DETECTING UNDESIRED EMAIL CONTAINING IMAGE-BASED MESSAGES

(51)	Број објаве европске пријаве патента	(51)
H 04L 12/56	EP 1703680	COMMUNICATION SYSTEM, MOBILE TERMINAL AND ACCESS ROUTER
H 04L 12/66	EP 2003832	System and method for creating multi-mode applications
H 04L 29/06	EP 2180653	System and method for providing media content on demand via a network
H 04M 1/247	EP 2031847	Method and apparatus allowing for user-selectable acoustic equalizer settings for voice calls
H 04M 1/60	EP 2031847	Method and apparatus allowing for user-selectable acoustic equalizer settings for voice calls
H 04M 1/725	EP 1921836	Handheld electronic device having selectable language indicator for language selection and method therefor
H 04M 1/725	EP 2031847	Method and apparatus allowing for user-selectable acoustic equalizer settings for voice calls
H 04M 1/725	EP 2103956	Estimation of the speed of a mobile device
H 04M 3/487	EP 1854062*	SYSTEM FOR DYNAMIC AD SELECTION AND PLACEMENT WITHIN A VOICE APPLICATION ACCESSED THROUGH AN ELECTRONIC INFORMATION PAGE
H 04M 3/51	EP 1889253*	A METHOD AND SYSTEM FOR ANALYZING SEPARATED VOICE DATA OF A TELEPHONIC COMMUNICATION BETWEEN A CUSTOMER AND A CONTACT CENTER BY APPLYING A PSYCHOLOGICAL BEHAVIORAL MODEL THERETO
H 04N 5/445	EP 2106661*	SYSTEMS AND METHODS FOR PRODUCTION, DELIVERY, RECORDING, AND VIEWING OF VIDEO AND SIMILAR CONTENT PRIMARILY INTENDED TO BE VIEWED IN STEP-FRAME/FRAME-ADVANCE MODE
H 04N 5/45	EP 2106661*	SYSTEMS AND METHODS FOR PRODUCTION, DELIVERY, RECORDING, AND VIEWING OF VIDEO AND SIMILAR CONTENT PRIMARILY INTENDED TO BE VIEWED IN STEP-FRAME/FRAME-ADVANCE MODE
H 04N 5/74	EP 2007139	VIDEO INFORMATION APPARATUS AND IMAGE PROCESSING METHOD
H 04N 5/92	EP 2106661*	SYSTEMS AND METHODS FOR PRODUCTION, DELIVERY, RECORDING, AND VIEWING OF VIDEO AND SIMILAR CONTENT PRIMARILY INTENDED TO BE VIEWED IN STEP-FRAME/FRAME-ADVANCE MODE
H 04N 7/16	EP 2016769*	SYNCHRONIZING FILTER METADATA WITH A MULTIMEDIA PRESENTATION
H 04N 7/167	EP 1834437*	METHOD AND APPARATUS FOR PROVIDING A SECURE MOVE OF A DECRYPTION CONTENT KEY
H 04N 7/24	EP 1834437*	METHOD AND APPARATUS FOR PROVIDING A SECURE MOVE OF A DECRYPTION CONTENT KEY
H 04N 9/04	EP 2002663*	METHOD AND ARRANGEMENT FOR GENERATING A COLOR VIDEO SIGNAL
H 04Q 1/14	EP 1875745*	DEVICE FOR INTERCEPTION, IN THE TELEPHONE CENTRAL OFFICES, OF THE EXISTING METALLIC PAIRS
H 04Q 7/22	EP 1872254*	SYSTEM AND METHOD OF REPRESENTING DATA ENTITIES OF STANDARD DEVICE APPLICATIONS AS BUILT-IN COMPONENTS
H 04Q 7/32	EP 1774430*	USER INTERFACE GENERATION WITH PARAMETRIC IMAGE DIVISION
H 04Q 7/32	EP 1872207*	SYSTEM AND METHOD OF PRESENTING ENTITIES OF STANDARD DEVICE APPLICATIONS IN WIRELESS DEVICES
H 04Q 7/38	EP 1804539	Apparatus, and associated method, for facilitating formation of a call connection in a radio communication system with a service center identified by a short dialing code
H 05B 3/00	EP 2000004*	METHOD AND APPARATUS FOR THE UNIFORM RESISTANCE HEATING OF ARTICLES

Жигови / Trademarks

Међународни кодови за идентификацију библиографских података о жиговима према - WIPO ST. 60

Recommendation concerning bibliographic data relating to trademarks - WIPO ST. 60

Регистарски број	**(111)**	Number of the registration
Датум регистрације	**(151)**	Date of the registration
Очекивани датум престанка важеwa жига	**(181)**	Expected expiration date of the registration
Број пријаве	**(210)**	Number of the application
Датум подношења пријаве	**(220)**	Date of filing of the application
Подаци о изложбеном праву првенства	**(230)**	Data concerning exhibitions
Подаци о праву првенства на основу Париске конвенције	**(300)**	Data relating to priority under the Paris Convention
Списак роба и услуга према Ничанској класификацији роба и услуга	**(511)**	List of goods and services according the Nice Classification of Goods and Service
Изјава подносиоца пријаве да не тражи ексклузивно право за поједине нединстиктивне елементе знака	**(526)**	Disclaimer
Опис фигуративних елемената жига према Бечкој класификацији	**(531)**	Description of figurative elements of the marks according to the Vienna Classification
Изглед знака	**(540)**	Reproduction of the mark
Назнака о природи или врсти знака	**(550)**	Indication relating to the nature or kind of mark
Информација о затраженим бојама на знаку	**(591)**	Information concerning the colors claimed
Име и адреса носиоца жига	**(732)**	Name and address of the holder of the registration
Име и адреса пуномоћника	**(740)**	Name and address of the representative

РЕГИСТРОВАНИ ЖИГОВИ

REGISTRATED TRADEMARKS

(111) **62301** (181) **23.07.2020.**
(210) Ж- 2010-1304 (220) 23.07.2010.
(151) 31.01.2011.
(300) 23.07.2010.
(732) **FUDBALSKI KLUB "SPARTAK ZLATIBOR VODA"**; Subotica, Segedinski put 80, RS
(540)

(531) 01.01.02; 01.01.10; 15.07.17; 21.03.01; 25.05.01; 26.03.01; 26.03.05; 26.03.16; 26.03.18; 27.05.01; 27.07.01; 29.01.14
(591) плава, црвена, жута, бела
(511) Кл. 16: штампане ствари, производи од хартије и картона.
Кл. 20: производи од дрвета, плуте и пластике.
Кл. 21: производи од стакларије, порцелана, грнчарије.
Кл. 24: текстилни производи.
Кл. 25: одећа, покривала за главу.
Кл. 41: спортске активности.

---

(111) **62302** (181) **06.07.2020.**
(210) Ж- 2010-1192 (220) 06.07.2010.
(151) 31.01.2011.
(300) 06.07.2010.
(732) **Miomir Korać**; 11070 Novi Beograd, Bulevar Mihajla Pupina 69, RS
(540)

PUT KULTURE RIMSKIH
IMPERATORA U SRBIJI

(531) 27.05.01
(591) теракота (бордо)
(511) Кл. 39: транспортне услуге, паковање и складиштење робе, организовање путовања.
Кл. 41: образовне услуге; припремање обуке; разонода; спортске и културне активности.
Кл. 42: научне и технолошке услуге и истраживање и пројектовање у вези наведених услуга, услуге индустријске анализе и истраживања, пројектовање и развој компјутерског хардвера и софтвера.

(111) **62303** (181) **06.07.2020.**
(210) Ж- 2010-1191 (220) 06.07.2010.
(151) 31.01.2011.
(300) 06.07.2010.
(732) **Miomir Korać**; 11070 Novi Beograd, Bulevar Mihajla Pupina 69, RS
(540)

PUTEVIMA RIMSKIH
IMPERATORA PO SRBIJI

(531) 27.05.01
(591) теракота (бордо)
(511) Кл. 39: транспортне услуге, паковање и складиштење робе, организовање путовања.
Кл. 41: образовне услуге; припремање обуке; разонода; спортске и културне активности.
Кл. 42: научне и технолошке услуге и истраживање и пројектовање у вези наведених услуга, услуге индустријске анализе и истраживања, пројектовање и развој компјутерског хардвера и софтвера.

---

(111) **62304** (181) **06.07.2020.**
(210) Ж- 2010-1190 (220) 06.07.2010.
(151) 31.01.2011.
(300) 06.07.2010.
(732) **Miomir Korać**; 11070 Novi Beograd, Bulevar Mihajla Pupina 69, RS
(540)

ITINERARIUM ROMANUM
SERBIAE

(531) 27.05.01; 27.05.10; 27.05.11
(591) теракота (бордо)
(511) Кл. 39: транспортне услуге, паковање и складиштење робе, организовање путовања.
Кл. 41: образовне услуге; припремање обуке; разонода; спортске и културне активности.
Кл. 42: научне и технолошке услуге и истраживање и пројектовање у вези наведених услуга, услуге индустријске анализе и истраживања, пројектовање и развој компјутерског хардвера и софтвера.

---

(111) **62305** (181) **18.10.2020.**
(210) Ж- 2010-1711 (220) 18.10.2010.
(151) 31.01.2011.
(300) 18.10.2010.

(732) **DOO Pavle komerc PSV**; Dimitrija Marjanovića 43/1, Paraćin, RS
(540)

(531) 03.05.01; 25.01.06; 27.05.01; 27.05.09; 27.05.17; 29.01.13
(591) плава, црвена, жута
(511) Кл. 16: тоалет папир, хидроактивни убрус, тоалетни убрус, папирне салвете, папирне марамице.

---

(111) **62306** (181) **05.11.2020.**
(210) Ж- 2010-1808 (220) 05.11.2010.
(151) 31.01.2011.
(300) 05.11.2010.
(732) **PROTON SYSTEM d.o.o.**; Viline vode bb, Slobodna Zona Beograd, 11000 Beograd, RS
(540)

ULTIMATUM

(511) Кл. 3: козметика.
Кл. 5: дијететске супстанце прилагођене за употребу у медицини.

---

(111) **62307** (181) **03.09.2020.**
(210) Ж- 2010-1489 (220) 03.09.2010.
(151) 31.01.2011.
(300) 03.09.2010.
(732) **Merck Sharp & Dohme Corp. a New Jersey corporation**; One Merck Drive, Whitehouse Station, New Jersey, NJ 08889-0100, US
(740) Павловић Гордана, Павловић Миливоје, адвокати, 11000 Београд, Мајке Јевросиме бр. 53
(540)

JENZYL

(511) Кл. 5: фармацеутски препарати.

---

(111) **62308** (181) **27.04.2020.**
(210) Ж- 2010-715 (220) 27.04.2010.
(151) 31.01.2011.
(300) 27.04.2010.
(732) **AMAN d.o.o. Privredno društvo za spoljnu i unutrašnju trgovinu**; 11271 Surčin, Vinogradska 52a, RS
(540)

(531) 01.01.15; 26.04.02; 26.04.18; 27.03.01; 27.05.01; 27.05.17; 27.05.24
(511) Кл. 3: средства за бељење и друге супстанце за употребу у перионицама; препарати за чишћење, полирање, рибање и нагризање, сапуни; парфимерија, етерична уља, козметика, лосиони косу, паста за зубе.
Кл. 29: месо, риба, живина и дивљач, месне прерађевине, конзервисано, замрзнуто, сушено и кувано воће и поврће, желеи, џемови, компоти, јаја, јестива уља и масти.
Кл. 30: кафа, чај, какао, шећер, пиринач, тапиока, саго, замена кафе, брашно и производи од житарица, хлеб колачи и посластице, сладоледи, мед, меласа, квасац, прашак за пециво, со, сенф, сирће, сосови (као додаци) зачин и лед.

---

(111) **62309** (181) **18.10.2020.**
(210) Ж- 2010-1716 (220) 18.10.2010.
(151) 31.01.2011.
(300) 18.10.2010.
(732) **Deckers Outdoor Corporation**; 495-A South Fairview Avenue, Goleta, CA 93117, US
(740) Андреј М. Прекајски, Његошева 28А, 11000 Београд
(540)

MUSH

(511) Кл. 25: обућа, јакне, панталоне, кратке панталоне, кошуље, џемпери, прслуци, хаљине, сукње, доњи веш, купаћи костими, чарапе, шешири, качкети, рукавице, каишеви.

---

(111) **62310** (181) **18.10.2020.**
(210) Ж- 2010-1717 (220) 18.10.2010.
(151) 31.01.2011.
(300) 18.10.2010.
(732) **Deckers Outdoor Corporation**; 495-A South Fairview Avenue, Goleta, CA 93117, US
(740) Андреј М. Прекајски, Његошева 28А, 11000 Београд
(540)

TEVA

(511) Кл. 25: јакне, панталоне, кратке панталоне, кошуље, џемпери, прслуци, хаљине, сукње, доњи веш, купаћи костими, чарапе, шешири, качкети, рукавице, каишеви.

(111) **62311** (181) **08.07.2020.**
(210) Ж- 2010-1201 (220) 08.07.2010.
(151) 31.01.2011.
(300) 08.07.2010.77/927,713 04.02.2010. US
(732) **Acorda Therapeutics, Inc. (Delaware corporation)**; 15 Skyline Drive, Hawthorne, New York 10532, US
(740) Драгослав Ристић, Владан Малешевић, 11000 Београд, Цара Лазара бр. 7
(540)

FAMPYRA

(511) Кл. 5: фармацеутски и биолошки препарати који се користе у лечењу повреда кичмене мождине, мултипле склерозе или других неуролошких поремећаја или стања.

---

(111) **62312** (181) **30.03.2020.**
(210) Ж- 2010-492 (220) 30.03.2010.
(151) 31.01.2011.
(300) 30.03.2010.
(732) **Društvo za proizvodnju, inženjering i usluge "BUCK" d.o.o.**; Milorada Jovanovića 9, 11000 Beograd, RS
(540)

BUCK

(531) 26.02.03; 26.02.05; 26.15.01; 27.05.01; 29.01.05
(591) CMYK: C:0%, M100%, Y20%, K20%; RGB: R:165, G:0, B:90
(511) Кл. 11: апарати за осветљавање - светиљке за спољно и унутрашње осветљење.

---

(111) **62313** (181) **09.04.2020.**
(210) Ж- 2010-569 (220) 09.04.2010.
(151) 31.01.2011.
(300) 09.04.2010.
(732) **Technoland, d.o.o.**; Bulevar Mihaila Pupina 10v/207, 11000 Beograd, RS
(740) Живко Мијатовић & Партнерс, д.о.о., 11000 Београд, Таковска 58/14
(540)

Maxiss

(531) 27.05.01; 27.05.13
(511) Кл. 25: одећа, обућа, покривала за главу.

(111) **62314** (181) **07.07.2020.**
(210) Ж- 2010-1194 (220) 07.07.2010.
(151) 31.01.2011.
(300) 07.07.2010.
(732) **EUROBANK EFG A.D.**; 11000 Beograd, Vuka Karadžića 10, RS
(540)

medifree®
jer zdravlje nema cenu

(531) 26.04.02; 26.04.06; 26.04.18; 27.05.01; 27.05.09; 27.05.10; 29.01.12
(591) плава и црвена
(511) Кл. 36: осигурање; финансијски послови; новчани (монетарни послови); послови везани за непокретности.

---

(111) **62315** (181) **22.07.2020.**
(210) Ж- 2010-1293 (220) 22.07.2010.
(151) 01.02.2011.
(300) 22.07.2010.
(732) **Društvo za proizvodnju i trgovinu VUMO DOO Beograd**; Ugrinovci, XXV Nova br.73, RS
(540)

OPSESIJA

(531) 27.05.01; 29.01.01
(591) црвена
(511) Кл. 33: ракија.

---

(111) **62316** (181) **20.05.2020.**
(210) Ж- 2010-861 (220) 20.05.2010.
(151) 01.02.2011.
(300) 20.05.2010.
(732) **BEOGRADSKA KULTURNA MREŽA d.o.o.**; 11000 Beograd, Radoja Dakića br. 23/23, RS
(740) Андријана В. Радојевић, адвокат, Београд, Његошева бр. 54/I
(540)

beer fest

(531) 27.05.01; 27.05.17; 27.05.19
(511) Кл. 43: услуге обезбеђивања хране и пића; привремени смештај.

(111) **62317** (181) **02.07.2020.**
(210) Ж- 2010-1172 (220) 02.07.2010.
(151) 02.02.2011.
(300) 02.07.2010.
(732) **Udruženje "Joga u svakodnevnom životu"**; 21000 Novi Sad, Futoška br. 115, RS
(540)

Хармонија тела, ума и душе

(531) 01.05.01; 26.01.01; 26.01.04; 26.01.16; 26.01.21; 26.11.12; 27.05.01; 28.05.00
(591) бела, наранџаста
(511) Кл. 41: образовне услуге; припремае обуке; разонода; спортске и културне активности.

---

(111) **62318** (181) **11.06.2020.**
(210) Ж- 2010-1056 (220) 11.06.2010.
(151) 03.02.2011.
(300) 11.06.2010.
(732) **ANLIT LTD.** ; An Israel company of Granot Center, M.P. Hefer 38100, IL
(740) Предраг Митровић, Аласка 36, 11080 Београд-Земун
(540)

YOMI

(511) Кл. 5: витамини, минерали и дијететски додаци; дијететски производи на бази пектина са витаминима, прополисом, ехинацеом и гвожђем; дијететски производи са укусом чоколаде са витаминима, пробиотицима и Омега 3 масним киселинама; дијететски производи на бази јогурта са Омега 3 масним киселинама (из рибљег уља); пробиотици и пребиотици.
Кл. 30: прехрамбени производи биљног порекла са укусом чоколаде са витаминима, пробиотицима и Омега 3 масним киселинама (из рибљег уља).

---

(111) **62319** (181) **28.09.2020.**
(210) Ж- 2010-1613 (220) 28.09.2010.
(151) 03.02.2011.
(300) 28.09.2010.
(732) **PROIZVODNO TRGOVINSKA RADNJA BG PRODUKT, Boban Gašić**; Omladinska 5, Kruševac, RS
(740) Манигодић др Миленко, адвокат, 11000 Београд, Кумановска 2Б
(540)

(531) 05.03.11; 05.03.15; 06.01.02; 06.01.04; 08.01.22; 08.01.23; 08.01.25; 25.01.01; 27.05.01; 29.01.15
(591) светло и тамно плава, светло и тамно зелена, црвена, жута, сива, бела и црна
(511) Кл. 30: ментол бомбоне.

---

(111) **62320** (181) **28.09.2020.**
(210) Ж- 2010-1614 (220) 28.09.2010.
(151) 03.02.2011.
(300) 28.09.2010.
(732) **PROIZVODNO TRGOVINSKA RADNJA BG PRODUKT, Boban Gašić**; Omladinska 5, Kruševac, RS
(740) Манигодић др Миленко, адвокат, 11000 Београд, Кумановска 2Б
(540)

(531) 05.03.11; 05.03.15; 06.01.02; 06.01.04; 08.01.22; 08.01.23; 08.01.25; 25.01.01; 27.05.01; 29.01.15
(591) светло и тамно плава, светло и тамно зелена, црвена, жута, сива, бела и црна
(511) Кл. 30: ментол бомбоне.

---

(111) **62321** (181) **16.09.2020.**
(210) Ж- 2010-1550 (220) 16.09.2010.
(151) 03.02.2011.
(300) 16.09.2010.
(732) **TRESET DOO ZA PROIZVODNJU, PROMET I USLUGE** ; Požarevački put bb, Veliko Gradište, RS
(740) Иконовић Живорад, адвокат, 11000 Београд, Маријане Грегоран бр. 69
(540)

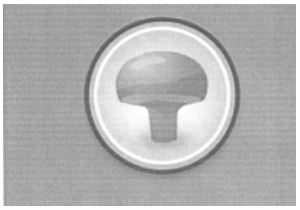

(531) 05.11.05; 26.01.01; 26.01.04; 26.01.15; 26.04.02; 26.04.10

(511) Кл. 1: хемијски производи који се употребљавају у индустрији, науци, фотографији, пољопривреди, хортикултури и шумарству; непрерађене вештачке смоле; непрерађене пластичне материје; ђубрива; смеше за гашење ватре; препарати за каљење и заваривање; хемијске супстанце за очување намирница; материје за штављење; лепљиве супстанце које се употребљавају у индустрији.

(111) **62322** (181) **16.09.2020.**
(210) Ж- 2010-1548 (220) 16.09.2010.
(151) 03.02.2011.
(300) 16.09.2010.
(732) **TRESET DOO ZA PROIZVODNJU, PROMET I USLUGE** ; Požarevački put bb, Veliko Gradište, RS
(740) Иконовић Живорад, адвокат, 11000 Београд, Маријане Грегоран бр. 69
(540)

TERAHUM

(511) Кл. 1: хемијски производи који се употребљавају у индустрији, науци, фотографији, пољопривреди, хортикултури и шумарству; непрерађене вештачке смоле; непрерађене пластичне материје; ђубрива; смеше за гашење ватре; препарати за каљење и заваривање; хемијске супстанце за очување намирница; материје за штављење; лепљиве супстанце које се употребљавају у индустрији.

(111) **62323** (181) **16.09.2020.**
(210) Ж- 2010-1549 (220) 16.09.2010.
(151) 03.02.2011.
(300) 16.09.2010.
(732) **TRESET DOO ZA PROIZVODNJU, PROMET I USLUGE** ; Požarevački put bb, Veliko Gradište, RS
(740) Иконовић Живорад, адвокат, 11000 Београд, Маријане Грегоран бр. 69
(540)

(531) 26.04.02; 26.04.18; 27.05.01; 27.05.03
(511) Кл. 1: хемијски производи који се употребљавају у индустрији, науци, фотографији, пољопривреди, хортикултури и шумарству; непрерађене вештачке смоле; непрерађене пластичне материје; ђубрива; смеше за гашење ватре; препарати за каљење и заваривање; хемијске супстанце за очување намирница; материје за штављење; лепљиве супстанце које се употребљавају у индустрији.

(111) **62324** (181) **05.10.2020.**
(210) Ж- 2010-1654 (220) 05.10.2010.
(151) 03.02.2011.
(300) 05.10.2010.10/3 735 092 03.05.2010. FR
(732) **EDENRED**; 166-180 Boulevard Gabriel Péri, 92240 Malakoff, FR
(740) ПЕТОШЕВИЋ д.о.о., Веле Нигринове 16А, 11000 Београд
(540)

EDENRED

(511) Кл. 9: магнетски кодиране, оптичке или картице са интегрисаним колима (смарт картице), са или без контакта (радиофреквентног, инфрацрвеног или другог), за једнократну употребу или пуњиве, припејд или постпејд, које могу да обављају једну или више електронских услуга, и које се употребљавају у разним врстама апликација, посебно у контроли приступа физичких лица, контроли приступа компјутерским системима, контроли потрошачких картица; софтвер за обраду комерцијалних налога (куповину); софтвер за обраду података, софтвер за прављење, управљање, ажурирање и коришћење база података, софтвер за омогућавање приступа електронском систему порука, софтвер за омогућавање приступа компјутерској или мрежи за пренос података, нарочито глобалној комуникационој мрежи (као што је интернет) или приватној или мрежи са ограниченим приступом (као што је интранет); компјутерски сервери, компјутери, телематски и телефонски терминали, нарочито они за глобалне комуникационе мреже (као што је интернет) или приватне или мреже са ограниченим приступом (као што је интранет); компјутерске периферије, укључујући мониторе за компјутере; модеми; конектори за комуникационе мреже, нарочито за компјутер или телефон; апарати за примање и слање комуникација; интерактивне справе за компјутер; компјутерске мреже, нарочито локалне компјутерске мреже, наиме, опрема за обраду података, компјутерски софтвер (наснимљен); електронске публикације које се могу преузети преко интернета.
Кл. 16: штампане ствари укључујући часописе, новине, проспекте, приручнике, брошуре; токени, картице, карте, купони, прибор за писање и канцеларијске потрепштине (изузев намештаја).
Кл. 35: управљање (рачуноводство, администрација), анализа, обрада нематеријалних и поверљивих комерцијалних информација у области хотелске индустрије, ресторана (хране), трговине, послова и финансија; администрација комерцијалних налога (куповина); вођење послова, комерцијална администрација; услуге комерцијалне администрације за набављање роба и услуга помоћу електронских картица, купона, ваучера или бонова; саветовање, консултације, информације, стручни

савети у вези са организацијом и вођењем послова; услуге пословног информисања у вези са ширењем и коришћењем припејд картица, поклон картица и других ваучера за плаћање; административни савети за организовање планова штедње унутар компаније; истраживања и испитивања тржишта; пословне истраге; економска предвиђања; сакупљање (нарочито састављање) и систематизација података у централизоване датотеке, нарочито у компјутерске базе података; књиговодство и срођивање фактура; писање и уношење административне и комерцијалне кореспонденције; састављање и проверавање извода рачуна, припремање пореских, рачуноводствених и компанијских изјава и докумената; рачуноводствене анализе, нарочито анализе трошкова производње и комерцијалних трошкова; статистичке информације и истраживања; оглашавање, укључујући оглашавање на електронским и компјутерским медијима, дистрибуција узорака и проспеката укључујући и путем електронских и компјутерских комуникационих мрежа; изнајмљивање простора за оглашавање, укључујући електронске и компјутерске медије; организовање акција за јачање лојалности купца; услуге промоције производа; изнајмљивање и ширење материјала за оглашавање (летака, проспеката, узорака и штампаних ствари) (оглашавање путем директне поште); оглашавање и ажурирање материјала за оглашавање, укључујући и путем електронских и компјутерских комуникационих мрежа; односи са јавношћу; организација изложби и трговачких сајмова у комерцијалне или сврхе оглашавања, укључујући електронске и компјутерске медије; избор и регрутовање особља за друге, укључујући путем електронских и компјутерских комуникационих мрежа; пословне процене; уговарања комерцијалних контаката (савети у потрази за пословним партнерима; админстративно и комерцијално организовање односа) између професионалних купаца и продаваца нове и половне опреме или између муштерија и оних који пружају услуге; савети, анализе и стручни савети у процењивању неопходних административних мера за рад са комерцијалним налозима (куповином), обезбеђивање хране, прехрамбених производа и услуга у домаћинству; регрутовање и вођење особља за агенције и привременог особља; испитивања, истраживања и консултације у вези са оцењивањем и побољшањем радних услова за запослене (ревизија пословне организације).

Кл. 36: издавање, компензација, повраћај ваучера, карата, купона, одрезака, припејд или дебитних картица или било ког другог средства плаћања нарочито преко компјутерске мреже, које омогућава организацију плаћања обезбеђивања хране и прехрамбених производа и било којих других производа или услуга; услуге кредитних картица и потрошачких картица; управљање финансијским предностима у вези са коришћењем потрошачке картице, услуга потрошачких картица (изузев за сврхе оглашавања) које омогућава да се из тих предности извуче корист; послови осигурања, финансијски и монетарни послови; савети, консултације, информације и стручни савети у области финансија; фактурисање, управљање протоком новца (за друге), наплаћивање дугова, трансфер средстава електронским путем; услуге финансирања за набављање робе или услуга путем електронских картица, купона, ваучера или бонова; управљање апартманима и некретнинама; изнајмљивање станова и некретнина; инвестициони фондови и капиталне инвестиције; управљање инвестиционим фондовима, састављање и управљање финансијски корисних портфолија, финансијске радње које укључују организовање и управљање штедним плановима код запослених; савети за организовање и управљање планова штедње унутар компаније.

Кл. 43: услуге хотела, ресторана (хране); услуге припремања оброка (хране и пића) и услуге домаће кухиње; услуге резервације хотела и пансиона, услуге информација у области хотела и ресторана (хране); вртићи, обданишта, јаслице.

---

(111) **62325** (181) **14.10.2020.**
(210) Ж- 2010-1695 (220) 14.10.2010.
(151) 03.02.2011.
(300) 14.10.2010.
(732) **"MONUS" preduzeće za proizvodnju, spoljnu i unutrašnju trgovinu i usluge doo Beograd**; Zemun, Aleksandra Dubčeka 14, RS
(540)

(531) 19.03.03; 26.03.01; 26.03.23; 26.11.08; 27.05.01
(511) Кл. 16: хартија, картон и производи од њих, који нису укључени у друге класе - штампане ствари, књиговезачки материјал, фотографије, канцеларијски материјал, лепила за канцеларијске и кућне потребе, уметнички материјал, кичице, писаће машине и канцеларијски реквизити, материјали за обуку и наставу, пластични материјали за паковање, штампарска слова, клишеи.
Кл. 34: дуван, артикли за пушаче, шибице.
Кл. 35: оглашавање, вођење послова, пословно управљање, канцеларијски послови.

(111) **62326** (181) **19.08.2020.**
(210) Ж- 2010-1434 (220) 19.08.2010.
(151) 07.02.2011.
(300) 19.08.2010.
(732) **Društvo za proizvodnju i trgovinu VUMO DOO Beograd**; Ugrinovci, XXV Nova br.73, RS
(540)

MEDENA

(531) 27.05.01; 29.01.02
(591) жута
(511) Кл. 33: ракија.

(111) **62327** (181) **09.04.2020.**
(210) Ж- 2010-570 (220) 09.04.2010.
(151) 07.02.2011.
(300) 09.04.2010.
(732) **Technoland, d.o.o.**; Bulevar Mihaila Pupina 10v/207, 11000 Beograd, RS
(740) Живко Мијатовић & Партнерс д.о.о., 11000 Београд, Таковска 58
(540)

(531) 27.05.01; 27.05.13
(511) Кл. 25: одећа, обућа, покривала за главу.

(111) **62328** (181) **09.07.2020.**
(210) Ж- 2010-1207 (220) 09.07.2010.
(151) 07.02.2011.
(300) 8797425 07.01.2010. EM
(732) **Land Rover**; Banbury Road, Gaydon, Warwick CV35 0RR, GB
(740) Живко Мијатовић & Партнерс д.о.о., 11000 Београд, Таковска 58
(540)

EVOQUE

(511) Кл. 12: сувоземна моторна возила и делови и опрема за њих.

(111) **62329** (181) **10.08.2020.**
(210) Ж- 2010-1386 (220) 10.08.2010.
(151) 07.02.2011.
(300) 10.08.2010.
(732) **Nine West Development Corporation**; 1007 Orange Street, Suite 225, 19801 Wilmington, DE, US
(740) Петошевић д.о.о., Веле Нигринове 16А, 11000 Београд
(540)

EASY SPIRIT

(511) Кл. 18: кожа и имитација коже, производи израђени од ових материјала који нису укључени у друге класе; животињска кожа, крзно; кофери и путне торбе; кишобрани, сунцобрани и штапови за ходање; бичеви, сарачка и седларска опрема; ташне.
Кл. 25: одећа, обућа, покривала за главу.
Кл. 35: услуге малопродаје.

(111) **62330** (181) **13.07.2020.**
(210) Ж- 2010-1328 (220) 13.07.2010.
(151) 07.02.2011.
(300) 13.07.2010.
(732) **AKCIONARSKO DRUŠTVO FABRIKA PUMPI "JASTREBAC"**; Bulevar 12. februar 82, 18000 Niš, RS
(540)

(531) 15.01.01; 26.01.16; 26.01.18; 26.11.13; 27.05.01; 27.05.24; 29.01.04
(591) светло плава, тамно плава
(511) Кл. 7: пумпе, пумпни агрегати, пумпна постројења, арматуре и турбине.

(111) **62331** (181) **17.05.2020.**
(210) Ж- 2010-835 (220) 17.05.2010.
(151) 08.02.2011.
(300) 17.05.2010.
(732) **Kraft Foods Global Brands LLC, a state of Delaware Limited Liability Company**; Three Lakes Drive, Northfield, Illinois 60093, US
(740) Павловић Гордана, Павловић Миливоје, адвокати, 11000 Београд, Мајке Јевросиме бр. 53
(540)

(531) 08.01.09; 08.01.10; 27.05.01
(511) Кл. 30: кекси, колачићи, крекери, бисквити.

(111) **62332** (181) **10.06.2020.**
(210) Ж- 2010-1055 (220) 10.06.2010.
(151) 09.02.2011.
(300) 10.06.2010.

(732) **AD "IMLEK"** ; Industrijsko naselje bb, 11213 Padinska skela, Beograd, RS
(540)

(531) 02.09.01; 03.04.02; 26.01.02; 26.01.15; 27.03.02; 27.05.01; 27.05.03; 27.05.09; 27.05.10; 27.05.11; 29.01.15
(591) нијансе браон, црвена, жута, наранџаста, бела
(511) Кл. 29: чоколадно млеко

---

(111) **62333** (181) **21.04.2020.**
(210) Ж- 2010-684 (220) 21.04.2010.
(151) 14.02.2011.
(300) 21.04.2010.
(732) **SZR MANUAL Radionica za izradu predmeta od kože i trgovinu, vlasnik Siniša Žarin**; 21000 Novi Sad, Zmaj Jovina 18, RS
(740) Зоран Живковић, 11000 Београд, Алексе Ненадовића 16
(540)

MANUAL ART DEPARTMENT

(511) Кл. 35: оглашавање; вођење послова; пословно управљање; канцеларијски послови, нарочито рекламирање, вођење рекламних кампања.
Кл. 42: научне и технолошке услуге; истраживање и пројектовање у вези наведених услуга, нарочито израда индустријског дизајна, израда дизајна паковања и ентеријера.

---

(111) **62334** (181) **29.04.2020.**
(210) Ж- 2010-731 (220) 29.04.2010.
(151) 14.02.2011.
(300) 29.04.2010.
(732) **Akcionarsko društvo za preardu i promet žitarica i proizvodnju testenina *DANUBIUS***; 21000 Novi Sad, Kanalska 1, RS
(540)

(531) 26.04.02; 26.04.16; 26.04.18; 26.11.13; 27.05.01; 29.01.13
(591) пантоне црвени градиент: 1797C, 188C, зелени градиент: 586C, 7496C, 350C CMYK.
(511) Кл. 30: кафа, чај, какао, шећер, пиринач, тапиока, саго, замена кафе; брашно и прозводи од житарица, хлеб, колачи и посластице, сладоледи; мед, меласа; квасац, прашак за пециво; со, сенф; сирће; сосови (као додаци); зачини; лед.
Кл. 39: транспортне услуге; паковање и складиштење робе.

---

(111) **62335** (181) **19.03.2020.**
(210) Ж- 2010-427 (220) 19.03.2010.
(151) 14.02.2011.
(300) 19.03.2010.
(732) **COLGATE-PALMOLIVE COMPANY** ; 300 Park Avenue, New York, N.Y. 10022, US
(740) Дејан П. Богдановић и др., Влајковићева 28, 11000 Београд
(540)

PLAX REVEAL

(511) Кл. 3: водица за испирање уста.

---

(111) **62336** (181) **14.09.2020.**
(210) Ж- 2010-1539 (220) 14.09.2010.
(151) 14.02.2011.
(300) 14.09.2010.
(732) **SLIDER, D.O.O.**; 11070 Novi Beograd, Bulevar Mihaila Pupina 10d/51, RS
(740) Миљаковић Зоран, 11070 Нови Београд, Булевар Михаила Пупина 10в/101
(540)

(531) 27.05.01
(511) Кл. 25: чизме, ципеле, сандале, папуче, каишеви као одевни предмети, рукавице, панталоне, сукње, хаљине, кошуље, џемпери, блузе, мајце, капути, мантили, јакне.

---

(111) **62337** (181) **06.09.2020.**
(210) Ж- 2010-1507 (220) 06.09.2010.
(151) 14.02.2011.
(300) 06.09.2010.
(732) **Karbon d.o.o.**; Bulevar Vožda Karađorđa 126, 34310 Topola, RS
(540)

(531) 27.05.01; 27.05.17; 29.01.01
(591) розе

(511) Кл. 1: лепљиве супстанце које се употребљавају у индустрији; хемијски производи који се употребљавају у индустрији, науци, фотографији, пољопривреди, хортикултури и шумарству; непрерађене вештачке смоле, непрерађене пластичне материје; ђубрива; смеше за гашење ватре; препарати за каљење и заваривање; хемијске супстанце за очување намирница; материје за штављење.
Кл. 2: боје, фирнајзи, лакови; средства за заштиту од рђе и труљења дрвета; материје за бојење; средства за нагризање; сирове природне смоле; метали у облику листова и праха за сликаре, декоратере, штампаре и уметнике.
Кл. 19: грађевински материјали (неметални); чврсте неметалне цеви за грађевине; асфалт, црна смола и битумен; неметалне преносне грађевине; споменици, који нису од метала.

---

(111) **62338** (181) **06.09.2020.**
(210) Ж- 2010-1501 (220) 06.09.2010.
(151) 14.02.2011.
(300) 06.09.2010.
(732) **Karbon d.o.o.**; Bulevar Vožda Karađorđa 126, 34310 Topola, RS
(540)

razilit

(531) 27.05.01; 27.05.17; 29.01.07
(591) браон
(511) Кл. 1: лепљиве супстанце које се употребљавају у индустрији; хемијски производи који се употребљавају у индустрији, науци, фотографији, пољопривреди, хортикултури и шумарству; непрерађене вештачке смоле, непрерађене пластичне материје; ђубрива; смеше за гашење ватре; препарати за каљење и заваривање; хемијске супстанце за очување намирница; материје за штављење.
Кл. 2: боје, фирнајзи, лакови; средства за заштиту од рђе и труљења дрвета; материје за бојење; средства за нагризање; сирове природне смоле; метали у облику листова и праха за сликаре, декоратере, штампаре и уметнике.
Кл. 19: грађевински материјали (неметални); чврсте неметалне цеви за грађевине; асфалт, црна смола и битумен; неметалне преносне грађевине; споменици, који нису од метала.

---

(111) **62339** (181) **06.09.2020.**
(210) Ж- 2010-1506 (220) 06.09.2010.
(151) 14.02.2011.
(300) 06.09.2010.
(732) **Karbon d.o.o.**; Bulevar Vožda Karađorđa 126, 34310 Topola, RS
(540)

karbokul

(531) 27.05.01; 27.05.17; 29.01.11
(591) тиркизна
(511) Кл. 1: лепљиве супстанце које се употребљавају у индустрији; хемијски производи који се употребљавају у индустрији, науци, фотографији, пољопривреди, хортикултури и шумарству; непрерађене вештачке смоле, непрерађене пластичне материје; ђубрива; смеше за гашење ватре; препарати за каљење и заваривање; хемијске супстанце за очување намирница; материје за штављење.
Кл. 2: боје, фирнајзи, лакови; средства за заштиту од рђе и труљења дрвета; материје за бојење; средства за нагризање; сирове природне смоле; метали у облику листова и праха за сликаре, декоратере, штампаре и уметнике.
Кл. 19: грађевински материјали (неметални); чврсте неметалне цеви за грађевине; асфалт, црна смола и битумен; неметалне преносне грађевине; споменици, који нису од метала.

---

(111) **62340** (181) **06.09.2020.**
(210) Ж- 2010-1496 (220) 06.09.2010.
(151) 14.02.2011.
(300) 06.09.2010.
(732) **Karbon d.o.o.**; Bulevar Vožda Karađorđa 126, 34310 Topola, RS
(540)

(531) 01.01.02; 26.03.01; 26.03.02; 26.03.13; 26.03.18; 27.05.01; 27.05.21; 29.01.13
(591) плава, црвена
(511) Кл. 1: лепљиве супстанце које се употребљавају у индустрији; хемијски производи који се употребљавају у индустрији, науци, фотографији, пољопривреди, хортикултури и шумарству; непрерађене вештачке смоле, непрерађене пластичне материје; ђубрива; смеше за гашење ватре; препарати за каљење и заваривање; хемијске супстанце за очување намирница; материје за штављење.

Кл. 2: боје, фирнајзи, лакови; средства за заштиту од рђе и труљења дрвета; материје за бојење; средства за нагризање; сирове природне смоле; метали у облику листова и праха за сликаре, декоратере, штампаре и уметнике.
Кл. 19: грађевински материјали (неметални); чврсте неметалне цеви за грађевине; асфалт, црна смола и битумен; неметалне преносне грађевине; споменици, који нису од метала.

---

(111) **62341** (181) **06.09.2020.**
(210) Ж- 2010-1503 (220) 06.09.2010.
(151) 14.02.2011.
(300) 06.09.2010.
(732) **Karbon d.o.o.**; Bulevar Vožda Karađorđa 126, 34310 Topola, RS
(540)

karbobet

(531) 27.05.01; 27.05.17; 29.01.05
(591) љубичаста
(511) Кл. 1: лепљиве супстанце које се употребљавају у индустрији; хемијски производи који се употребљавају у индустрији, науци, фотографији, пољопривреди, хортикултури и шумарству; непрерађене вештачке смоле, непрерађене пластичне материје; ђубрива; смеше за гашење ватре; препарати за каљење и заваривање; хемијске супстанце за очување намирница; материје за штављење.
Кл. 2: боје, фирнајзи, лакови; средства за заштиту од рђе и труљења дрвета; материје за бојење; средства за нагризање; сирове природне смоле; метали у облику листова и праха за сликаре, декоратере, штампаре и уметнике.
Кл. 19: грађевински материјали (неметални); чврсте неметалне цеви за грађевине; асфалт, црна смола и битумен; неметалне преносне грађевине; споменици, који нису од метала.

---

(111) **62342** (181) **06.09.2020.**
(210) Ж- 2010-1504 (220) 06.09.2010.
(151) 14.02.2011.
(300) 06.09.2010.
(732) **Karbon d.o.o.**; Bulevar Vožda Karađorđa 126, 34310 Topola, RS
(540)

glet STAR

(531) 25.07.21; 26.04.02; 26.04.18; 27.05.01; 27.05.09; 27.05.17; 29.01.12
(591) наранџаста, црна
(511) Кл. 1: лепљиве супстанце које се употребљавају у индустрији; хемијски производи који се употребљавају у индустрији, науци, фотографији, пољопривреди, хортикултури и шумарству; непрерађене вештачке смоле, непрерађене пластичне материје; ђубрива; смеше за гашење ватре; препарати за каљење и заваривање; хемијске супстанце за очување намирница; материје за штављење.
Кл. 2: боје, фирнајзи, лакови; средства за заштиту од рђе и тру љења дрвета; материје за бојење; средства за нагризање; сирове природне смоле; метали у облику листова и праха за сликаре, декоратере, штампаре и уметнике.
Кл. 19: грађевински материјали (неметални); чврсте неметалне цеви за грађевине; асфалт, црна смола и битумен; неметалне преносне грађевине; споменици, који нису од метала.

---

(111) **62343** (181) **06.09.2020.**
(210) Ж- 2010-1509 (220) 06.09.2010.
(151) 14.02.2011.
(300) 06.09.2010.
(732) **Karbon d.o.o.**; Bulevar Vožda Karađorđa 126, 34310 Topola, RS
(540)

sipro KOL

(531) 25.07.21; 26.04.02; 26.04.18; 27.05.01; 27.05.09; 27.05.17; 29.01.03
(591) зелена
(511) Кл. 1: лепљиве супстанце које се употребљавају у индустрији; хемијски производи који се употребљавају у индустрији, науци, фотографији, пољопривреди, хортикултури и шумарству; непрерађене вештачке смоле, непрерађене пластичне материје; ђубрива; смеше за гашење ватре; препарати за каљење и заваривање; хемијске супстанце за очување намирница; материје за штављење.
Кл. 2: боје, фирнајзи, лакови; средства за заштиту од рђе и труљења дрвета; материје за бојење; средства за нагризање; сирове природне смоле; метали у облику листова и праха за сликаре, декоратере, штампаре и уметнике.
Кл. 19: грађевински материјали (неметални); чврсте неметалне цеви за грађевине; асфалт, црна смола и битумен; неметалне преносне грађевине; споменици, који нису од метала.

---

(111) **62344** (181) **23.08.2020.**
(210) Ж- 2010-1448 (220) 23.08.2010.
(151) 16.02.2011.
(300) 23.08.2010.

(732) **ARCOR S.A.I.C.**; Avda. Fulvio Pagani 487, Arroyito, Province of Cordoba, AR
(740) Живко Мијатовић & Партнерс, д.о.о., Таковска 58, 11000 Београд
(540)

(531) 26.01.02; 26.01.03; 26.01.16; 26.01.18; 26.11.12; 27.05.01; 27.05.12; 27.05.24
(511) Кл. 30: кафа, чај, какао, шећер, пиринач, тапиока, саго, замена кафе; брашно и производи од житарица, хлеб, колачи, посластице, сладоледи; мед, меласа, квасац, прашак за пециво; со, сенф; сирће, сосови (као зачини); зачини; лед.

(111) **62345** (181) **24.05.2020.**
(210) Ж- 2010-882 (220) 24.05.2010.
(151) 16.02.2011.
(300) 24.05.2010.
(732) **"ORION TELEKOM" doo Beograd**; Gandijeva 76A, Beograd, RS
(740) Горан Цветковић, адвокат, Београд, Кнез Михаилова бр. 7/IV
(540)

(531) 27.05.01; 27.05.09; 27.05.10; 29.01.12
(591) црна и љубичаста (пантоне 2415C, CMYK: C37, M100, Y0, K0).
(511) Кл. 35: оглашавање; вођење послова; пословно управљање; канцеларијски послови; послови рекламе и пропаганде; пословне процене, помоћ у пословном управљању, професионалне пословне консултације, истраживања, испитивања, формирање компјутерских база података, пословне експертизе, организовање сајмова и изложби и изложби у комерцијалне или рекламне сврхе, испитивање тржишта, тржишне студије, услуге рекламних агенција, комерцијални послови на остваривању функције промета робе и услуга.
Кл. 36: финансијски консалтинг у области компјутерске индустрије.
Кл. 38: телекомуникације; дозволити једном лицу да комуницира са другим; пренос порука од једне особе до друге; стављања лица у положај визуелне или говорне комуникације са другим (радио и телевизија); услуге које садрже дифузију радио или телевизијских програма; обезбеђивање интернета, комуникација путем комјутерских терминала, комуникација путем оптичких мрежа, комуникација телефоном, компјутерски пренос порука и слика, електронска пошта, информације о телекомуникацијама, слање порука, обезбеђивање приступа базама података, обезбеђивање телекомуникационих веза за глобалну компјутерску мрежу, изнајмљивање времена приступа глобалној компјутерској мрежи, изнајмљивање телекомуникационе опреме, телекомуникационе услуге усмеравања и спајања, телеконференције, телефонске услуге, услуге говорне поште.
Кл. 39: транспортне услуге.
Кл. 42: програмирање компјутера, консултације на пољу компјутерских хардвера, одржавање и ажурирање компјутерских програма, компјутерске системске анализе, индустријски дизајн, дизајнирање амбалаже, обележавање графичких дела, инжењеринг, консалтинг, менаџмент, научне и технолошке услуге и истраживање и пројектовање у вези наведених услуга; услуге индустријске анализе и истраживања; пројектовање и развој компјутерског хардвера и софтвера; услуге инжењера које се предузимају ради планирања, оцене, истраживања и извештавања у научним и технолошким областима.

(111) **62346** (181) **02.02.2021.**
(210) Ж- 2011-126 (220) 02.02.2011.
(151) 16.02.2011.
(300) 02.02.2011.
(732) **ViiV Healthcare Company, Corporation Service Company**; 2711 Centerville Road, Suite 400, Wilmington, Delaware 19808, US
(740) Дејан П. Богдановић и др., Влајковићева 28, 11000 Београд
(540)

TELZIR

(511) Кл. 5: фармацеутски и медицински препарати и супстанце.

(111) **62347** (181) **24.09.2020.**
(210) Ж- 2010-1586 (220) 24.09.2010.
(151) 16.02.2011.
(300) 24.09.2010.
(732) **Strauss Adriatic d.o.o.**; Šimanovci, Miloša Obilića 41, RS
(740) Милан Петровић, Тадеуша Кошћушка 8, 11000 Београд
(540)

(531) 01.15.11; 11.03.04; 26.04.02; 26.04.18; 27.03.15; 27.05.01; 29.01.12
(591) црвена, бела
(511) Кл. 30: кафа.

(111) **62348** (181) **29.09.2020.**
(210) Ж- 2010-1618 (220) 29.09.2010.
(151) 16.02.2011.
(300) 29.09.2010.
(732) **"Strauss Adriatic" d.o.o.** ; ul. Miloša Obilića br.41, Šimanovci, RS
(740) Милан Петровић, Тадеуша Кошћушка 8, 11000 Београд
(540)

(531) 11.03.04; 26.11.12; 27.03.15; 27.05.01; 29.01.13
(591) црвена, бела, црна
(511) Кл. 21: кућне или кухињске справе и посуде. Кл. 30: кафа.

---

(111) **62349** (181) **29.09.2020.**
(210) Ж- 2010-1619 (220) 29.09.2010.
(151) 16.02.2011.
(300) 29.09.2010.
(732) **"Strauss Adriatic" d.o.o.** ; ul. Miloša Obilića br.41, Šimanovci, RS
(740) Милан Петровић, Тадеуша Кошћушка 8, 11000 Београд
(540)

(531) 11.03.04; 26.11.12; 27.03.15; 27.05.01; 29.01.13
(591) црвена, бела, црна
(511) Кл. 21: кућне или кухињске справе и посуде. Кл. 30: кафа.

---

(111) **62350** (181) **29.07.2020.**
(210) Ж- 2010-1333 (220) 29.07.2010.
(151) 16.02.2011.
(300) 29.07.2010.
(732) **DELTA AGRAR DOO BEOGRAD**; Jurija Gagarina 12, 11070 Novi Beograd, RS
(540)

(531) 05.07.13; 25.01.15; 26.11.12; 26.11.13; 27.05.01; 27.05.10; 29.01.02
(591) старо злато
(511) Кл. 33: алкохолна пића, наиме јабукова ракија: од јабука пореклом из Челарева.

---

(111) **62351** (181) **06.10.2020.**
(210) Ж- 2010-1659 (220) 06.10.2010.
(151) 16.02.2011.
(300) 06.10.2010.
(732) **IVANČIĆ I SINOVI**; 11000 Beograd, Palmotićeva 13, RS
(540)

VAGILACT

(511) Кл. 5: фармацеутски и ветеринарски препарати; санитарни препарати за медицинску употребу; дијететске супстанце прилагођене за употребу у медицини, храна за бебе; фластери, материјали за завијање; материјали за пломбирање зуба, зубарска смола, дезинфекциона средства; препарати за уништавање штеточина, фунгициди, хербициди.

---

(111) **62352** (181) **18.05.2019.**
(210) Ж- 2009-782 (220) 18.05.2009.
(151) 17.02.2011.
(300) 18.05.2009.
(732) **Universal Protein Supplements Corporation d/b/a Universal Nutrition**; 3 Terminal Road, New Brunswick, New Jersey 08901, US
(740) Драгољуб Ћосовић, 11000 Београд, Војводе Драгомира 27
(540)

(531) 26.01.02; 26.02.05; 26.11.12; 27.05.01; 27.05.17
(526) Nutrition

(511) Кл. 5: дијететски додаци храни, биљни додаци, замене за оброке и дијететски додаци у виду миксованог пића, нутриционистички минерални додаци, минерални додаци, нутриционистички додаци, нутриционистички додаци у виду миксованог пића, витамински и минерални додаци, витамински додаци, замена за оброке у облику штапића - плочица; све наведено за употребу у дијететске сврхе.
Кл. 35: "On-line" услуге малопродаје производа који се односе на дијететске и нутриционистичке производе.

---

(111) **62353** (181) **10.04.2016.**
(210) Ж- 2006-891 (220) 10.04.2006.
(151) 17.02.2011.
(300) 10.04.2006.
(732) **DEUTSCHE TELEKOM AG**; Friedrich-Ebert-Allee 140, D-53113 Bonn, DE
(740) Петошевић Душан, адвокат, 11000 Београд, Козјачка 15
(540)

T-Mobile Montenegro

(511) Кл. 9: електрични, електронски, оптички, мерни, сигнални, контролни или наставни апарати и инструменти (укључени у ову класу); апарати за снимање, пренос, обраду и репродуковање звука, слика или података; машински читљиви преносници података; аутомати и механизми за апарате који раде са новцем или жетоном; опрема за обраду података и компјутери; сва поменута роба са пореклом из Црне Горе.
Кл. 16: штампане ствари, нарочито отиснуте и/или штампане картице од картона или пластике; материјали за обуку и наставу (изузев апарата); канцеларијски реквизити (изузев намештаја); сва поменута роба са пореклом из Црне Горе.
Кл. 18: кишобрани, сунцобрани; роба од коже и имитације коже; кофери и путне торбе; сва поменута роба са пореклом из Црне Горе.
Кл. 24: текстил и текстилна роба (укључена у ову класу); прекривачи за кревете и столове; сва поменута роба са пореклом из Црне Горе.
Кл. 25: одећа, обућа, покривала за главу; сва поменута роба са пореклом из Црне Горе.
Кл. 28: игре и играчке; справе за гимнастичку и спортску опрему; гимнастички и спортски артикли (укључени у ову класу); сва поменута роба са пореклом из Црне Горе.
Кл. 35: оглашавање и вођење послова; сакупљање и пружање података; услуге малопродаје које се односе на телекомуникације и опрему за пренос података; све поменуте услуге са пореклом из Црне Горе.
Кл. 36: осигурање; финансијски послови; монетарни послови; послови везани за непокретности; све поменуте услуге са пореклом из Црне Горе.
Кл. 38: телекомуникације; управљање и издавање опреме за телекомуникације; нарочито за радио-дифузију и телевизију; сакупљање и обезбеђивање вести и информација; електронски пренос информација из области културе, спорта, бизниса, образовања и обуке као и разоноде и забаве; услуге база података, нарочито преспајање и издавање приступног времена за базе података; све поменуте услуге са пореклом из Црне Горе.
Кл. 39: транспорт и складиштење робе; све поменуте услуге са пореклом из Црне Горе.
Кл. 41: образовање; обучавање; забава; организовање спортских и културних догађаја; објављивање и издавање књига, магазина и других штампаних производа, као и одговарајућих електронских медија (укључујући CD-ROM-ове и CD-I-ове); све поменуте услуге са пореклом из Црне Горе.
Кл. 42: услуге програмирања компјутера; услуге база података, посебно издавање времена приступа и управљања базама података; услуге давања у закуп које се односе на опрему за обраду података и компјутере; развој, управљање и одржавање база података; услуге давања у закуп које се односе на опрему за обраду података и компјутере; услуге техничког пројектовања студија и планирања које се односе на опрему за телекомуникације и услуге дизајна; услуге индустријске анализе и истраживања; све поменуте услуге са пореклом из Црне Горе.

---

(111) **62355** (181) **18.05.2019.**
(210) Ж- 2009-781 (220) 18.05.2009.
(151) 21.02.2011.
(300) 18.05.2009.
(732) **Universal Protein Supplements Corporation d/b/a Universal Nutrition**; 3 Terminal Road, New Brunswick, New Jersey 08901, US
(740) Драгољуб Ћосовић, 11000 Београд, Војводе Драгомира 27
(540)

(531) 24.17.02; 26.01.01; 26.01.18; 26.11.10; 27.05.01; 27.05.21
(511) Кл. 5: дијететски додаци храни, биљни додаци, замене за оброке и дијететски додаци у виду миксованог пића, нутриционистички минерални додаци, минерални додаци, нутриционистички додаци, нутриционистички додаци у виду миксованог пића, витамински и минерални додаци, витамински додаци, замена за оброке у облику штапића-плочица; све наведено за дијететске сврхе. Notes: За наведену робу у класи 5 регистрован дана 17.3.2011. године.

Кл. 25: одећа, нарочито шешири, капе, доњи делови одеће, горњи делови одеће, панталоне, шорцеви, мајице, дуксеви, доњи делови тренерки, спортски шортсеви, спортске јакне.

(111) **62356** (181) **23.06.2020.**
(210) Ж- 2010-1110 (220) 23.06.2010.
(151) 22.02.2011.
(300) 23.06.2010.
(732) **Pavlović Boban**; Karađorđeva 222/2-3, Kraljevo, RS
(540)

Akapulko band

(511) Кл. 41: извођење музичког програма; извођење сценског програма; извођење забавног програма

(111) **62357** (181) **11.12.2019.**
(210) Ж- 2009-1953 (220) 11.12.2009.
(151) 23.02.2011.
(300) 11.12.2009.
(732) **SZR "Zlatna dolina"**; 31204 Karan, RS
(740) Мамић Ана, дипл.правник, 11000 Београд, Господар Јевремова 41
(540)

Златна
долина

(531) 27.05.01; 27.05.19; 27.05.22; 28.05.00
(511) Кл. 29: алкохолна пића.
Кл. 32: минералне и содне воде и друга безалкохолна пића; пића од воћа и воћни сокови; сирупи и други препарати за производњу пића.
Кл. 33: конзервисано, замрзнуто, сушено и кувано воће и поврће; желеи, џемови, компоти.

(111) **62358** (181) **23.07.2020.**
(210) Ж- 2010-1308 (220) 23.07.2010.
(151) 23.02.2011.
(300) 23.07.2010.
(732) **Danilo Golijanin**; Kneginje Zorke 9A/20, 11000 Beograd, RS
(740) Шуњка Томислав, адвокат, 21000 Нови Сад, Сремска 4/1
(540)

Gedžet godine

(511) Кл. 35: оглашавање; вођење послова; пословно управљање; канцеларијски послови; организовање избора најбољих производа и услуга.
Кл. 38: телекомуникација.
Кл. 41: образовне услуге; припремање обуке; разонода; организовање такмичења; спортске и културне активности.

(111) **62359** (181) **05.08.2020.**
(210) Ж- 2010-1363 (220) 05.08.2010.
(151) 23.02.2011.
(300) 05.08.2010.
(732) **ALDO GROUP INTERNATIONAL AG**; Lindenstrasse 8, 6340 Baar, ZG, CH
(740) Живко Мијатовић & Партнерс д.о.о., 11000 Београд, Таковска 58
(540)

ALDO

(511) Кл. 3: козметика; парфимерија; етерична уља и сапуни; обућа и препарати за одржавање одеће, наиме, препарати за полирање ципела, препарати за чишћење на бази аеросоли и без аеросоли и препарати за заштиту коже, јеленске коже и тканине.
Кл. 9: наочаре за сунце.
Кл. 14: модна опрема, наиме, накит, сатови и привесци за кључеве.
Кл. 26: украси за косу, траке за косу, шнале за косу, држачи за плетенице.

(111) **62360** (181) **09.11.2020.**
(210) Ж- 2010-1829 (220) 09.11.2010.
(151) 23.02.2011.
(300) 09.11.2010.
(732) **Cheminova A/S**; Thyborønvej 78, DK-7673 Harboøre, DK
(740) Душан Л. Петошевић, адвокат, Козјачка 15, 11000 Београд
(540)

FORTIX

(511) Кл. 5: пестициди, укључујући инсектициде, хербициде и фунгициде.

(111) **62361** (181) **08.11.2020.**
(210) Ж- 2010-1814 (220) 08.11.2010.
(151) 23.02.2011.
(300) 08.11.2010.
(732) **Japan Tobacco Inc.**; 2-2-1 Toranomon, Minato-ku, Tokyo, JP
(740) Петошевић д.о.о., Веле Нигринове 16А, 11000 Београд
(540)

(531) 01.15.11; 19.03.03; 24.01.15; 24.01.19; 27.05.01

(511) Кл. 34: дуван, било да је прерађен или непрерађен; дуван за пушење, дуван за лулу, дуван за ручно увијање, дуван за жвакање, снус дуван; цигарете, цигаре, цигарилоси; супстанце за пушење које се продају одвојено или помешано са дуваном, а које се не користе у медицинске или лековите сврхе; дуван за ушмркавање; артикли за пушаче наведени у класи 34; папир за цигарете, тубе за цигарете и шибице.

(111) **62362** (181) **03.11.2020.**
(210) Ж- 2010-1795 (220) 03.11.2010.
(151) 23.02.2011.
(300) 03.11.2010.
(732) **VLADIMIR MIRKOV; ENES HUBIJAR and VLADIMIR BARBIĆ**; 21000 Novi Sad, Alberta Ajnštajna 26, RS; 21000 Novi Sad, Ive Andrića 9, RS and 21000 Novi Sad, Alberta Ajnštajna 24A, RS
(740) Јелена Зелинчевић, Максима Горког 5, 21000 Нови Сад
(540)

(531) 26.01.19; 26.03.01; 26.03.06; 27.05.01; 27.05.02; 27.05.17; 29.01.13
(591) плава, жута, бела
(511) Кл. 3: средства за бељење и друге супстанце за употребу у перионицама; препарати за чишћење, полирање, рибање и нагризање; сапуни; парфимерија, етерична уља, козметика, лосиони за косу; пасте за зубе.
Кл. 8: ручни алати и справе (којима се ручно управља); прибор за јело; хладно оружје; жилети.
Кл. 21: кућне или кухињске справе и посуде; чешљеви и сунђери; четке (изузев кичица); материјали за прављење четки; артикли који се користе при чишћењу; челична вуна; непрерађено или полипрерађено стакло (осим стакла које се користи у грађевинарству); стакларија, порцелан, фајанс, грнчарија и лончарија која није укључена у друге класе.

(111) **62363** (181) **01.11.2020.**
(210) Ж- 2010-1779 (220) 01.11.2010.
(151) 23.02.2011.
(300) 01.11.2010.
(732) **"ArhivCentar" d.o.o., Beograd**; Zarije Vujoševića 87, 11070 Novi Beograd, RS
(740) Бранко Јовичић, Таковска 13, 11000 Београд
(540)

(531) 01.05.01; 03.07.24; 27.05.09; 27.05.10
(511) Кл. 16: хартија, картон и производи од њих који нису укључени у друге класе; штампане ствари.
Кл. 35: услуге оглашавања.

(111) **62364** (181) **28.10.2020.**
(210) Ж- 2010-1762 (220) 28.10.2010.
(151) 23.02.2011.
(300) 28.10.2010.
(732) **Dom zdravlja JEDRO**; 11070 Beograd – Novi Beograd, Jurija Gagarina 14, RS
(540)

(531) 05.07.13; 24.13.01; 24.13.24; 27.03.11; 27.05.01; 27.05.10; 27.05.17
(591) бела, црвена, зелена, сива боја
(511) Кл. 39: транспортне услуге.
Кл. 44: медицинске услуге; хигијенска заштита и нега лепоте за људе или животиње.

(111) **62365** (181) **01.11.2020.**
(210) Ж- 2010-1775 (220) 01.11.2010.
(151) 23.02.2011.
(300) 01.11.2010.
(732) **COMMUNIS D.O.O.**; Bulevar oslobođenja 61, 11000 Beograd, RS
(540)

(531) 27.05.01; 27.05.17; 29.01.12
(591) пантоне 877, пантоне 151
(511) Кл. 35: оглашавање, вођење послова, пословно управљање, канцеларијски послови.
Кл. 38: телекомуникације.
Кл. 41: образовне услуге, припремање обуке, разонода, спортске и културне активности.

(111) **62366** (181) **18.10.2020.**
(210) Ж- 2010-1720 (220) 18.10.2010.
(151) 23.02.2011.
(300) 18.10.2010.
(732) **Chongqing Senci Import and Export Trading Co. Ltd.**; NO. 200, Northern Tongxin Road, Tong Jiaxi Town, Beibei District, Chongqing, CN
(740) Петошевић д.о.о., Веле Нигринове 16А, 11000 Београд
(540)

(531) 26.11.11; 27.01.13; 27.01.25; 27.03.01; 27.05.01; 27.05.17

(511) Кл. 7: дизел мотор осим за копнена возила; безински мотор осим за копнена возила; алтернатори; динама; генератори струје; пољопривредне машине; косилице (машине); пумпе (машине); апарати за прање; електричне машине и апарати за прање; перилица под високим притиском; ауспух за мотор аутомобила; моторизовани култиватори; дренажне машине; центрифугалне пумпе.

(111) **62367** (181) **30.08.2020.**
(210) Ж- 2010-1476 (220) 30.08.2010.
(151) 23.02.2011.
(300) 30.08.2010.
(732) **Cheil Industries Inc. (a Korean corporation)**; 290 Gongdan-dong, Gumi-si, Gyeongsangbuk-do 730-710, KR
(740) Душан Л. Петошевић, адвокат, Козјачка 15, 11000 Београд
(540)

Radianz

(531) 27.05.01; 27.05.13
(511) Кл. 19: вештачки камен; калупи, неметални, за грађевинарство; гипсане облоге, неметалне, за грађевинарство; зидне оплате, неметалне, за грађевинарство; зидне облоге, неметалне, за грађевинарство; грађевинске плоче, неметалне; оплате, неметалне; грађевински материјал, неметални; неметални материјали који се искључиво користе у грађењу и изградњи; степеништа, неметална; газишта за степеништа, неметална; рукохвати, неметални; подне облоге, неметалне; подови, неметални; зидни панели, неметални; зидне плоче, неметалне; дрвене зидне оплате, неметалне; подне даске (дашчани подови); паркетни подови и паркетне дашчице; таванице, неметалне; плочице, неметалне; зидне плочице, неметалне, за грађевинарство; плочице, неметалне, за грађевинарство; подне плочице, неметалне; керамичке плочице за подове и оплате; керамичке плочице за подове и фасаде, керамичке плочице за плочасте подове и облоге; радне плоче.

(111) **62368** (181) **17.08.2020.**
(210) Ж- 2010-1419 (220) 17.08.2010.
(151) 23.02.2011.
(300) 17.08.2010.51725/2010 19.02.2010. CH
(732) **SOCIETE DES PRODUITS NESTLE S.A.**; 1800 Vevey, CH
(740) Дејан П. Богдановић и др., Влајковићева 28, 11000 Београд
(540)

CREATIVA

(511) Кл. 11: апарати за грејање и кување; апарати за грејање млека и прављење пене од млека; апарати за прављење напитака укључујући кафу, чај, напитке на бази чоколаде и/или какаа, капућино; апарати за кафу, лонци за кафу и електрични филтер апарати; делови и опрема за сву напред наведену робу; електрични апарати за припремање напитака и пуњиви елементи, картрици и резервни делови за такве апарате; филтери за кафу, електрични; филтер апарати за кафу, електрични.
Кл. 30: кафа, екстракти кафе, препарати и напици на бази кафе; замене за кафу, ектракти замена за кафу, препарати и напици на бази замена за кафу; чај, екстракти чаја, препарати и напици на бази чаја; какао и препарати и напици на бази какаа; препарати и напици на бази чоколаде; капсуле које садрже кафу за кување; капсуле које садрже чај за кување; капсуле које садрже какао за кување.

(111) **62369** (181) **16.08.2020.**
(210) Ж- 2010-1414 (220) 16.08.2010.
(151) 23.02.2011.
(300) 16.08.2010.
(732) **Mina Jevtić**; 21000 Novi Sad, Augusta Cesarca 15, RS
(540)

styleić

(531) 27.05.01; 27.05.09; 27.05.17
(511) Кл. 20: намештај, огледала, оквири за слике, производи (који нису обухваћени другим класама) од дрвета, плуте, трске, рогоза, врбовог прућа, рога, кости, слоноваче, китове кости, шкољки, ћилибара, седефа, морске пене и замене свих ових материјала, или од пластике.
Кл. 21: кућне или кухињске справе и посуде, чешљеви и сунђери; четке (изузев кичица); материјали за прављење четки; артикли који се користе при чишћењу; челична вуна; непрерађено или полупрерађено стакло (осим стакла које се користи у грађевинарству); стакларија, порцелан, фајанс, грнчарија и лончарија која није укључена у друге класе.
Кл. 25: одећа, обућа, покривала за главу.

(111) **62370** (181) **16.08.2020.**
(210) Ж- 2010-1404 (220) 16.08.2010.
(151) 23.02.2011.
(300) 16.08.2010.US 77/937,069 16.02.2010. US
(732) **Marchon Eyewear, Inc. (New York Corporation)**; 35 Hub Drive, Melville, New York 11747 , US
(740) Драгослав Ристић, Владан Малешевић, 11000 Београд, Цара Лазара бр. 7
(540)

KISS & KILL

(511) Кл. 9: наочаре, наочаре за сунце, оквири за наочаре и наочаре за сунце, футроле за наочаре и наочаре за сунце, наочаре за сунце које се каче на наочаре, ланчићи за наочаре и наочаре за читање.

(111) **62371** (181) **15.10.2020.**
(210) Ж- 2010-1699 (220) 15.10.2010.
(151) 23.02.2011.
(300) 15.10.2010.
(732) **Marija Dželajlija Džodžo**; Strumička 84/3, 11050 Voždovac, RS
(540)

ARCODENA

(511) Кл. 3: козметика, шампони, парфеми, сапуни, козметички препарати за купање, сапун за бријање, кармин, памучни штапићи за козметичке сврхе, козметичке маске за лице, водица за испирање уста - не за медицинске сврхе, лак за нокте, препарати за шминкање, лосиони за косу, креме за обућу, боје за косу, препарати за коврџање косе, препарати за полирање, восак за ципеле, препарати за чишћење намештаја и подове, препарати за сјајање (полирање), восак за под, восак за полирање, колоњска вода, козметичи комплети, вате у козметичке сврхе, препарати за уклањање мрља, оловке (козметика), креме за полирање, креме (козметика), сода за прање, за чишћење креме за кожу, детерџенти, осим у производњи и за медицинске сврхе, одмашћивачи, осим за употребу у производњи, препарати за скидање шминке, пасте за зубе, дезинфицирајући сапун, препарати за уклањање каменца за кућне потребе, антистатик препарати за кућне потребе, тоалетне воде, депилатори, есенцијална уља, шминка, препарати за чишћење и прање, уља за козметичке сврхе, уља за чишћење, лосиони за козметичке сврхе, млеко за чишћење за тоалетне сврхе, хемикалије за бељење веша, средства за личну хигијену, течност за чишћење ветробрана, лековити сапуни, козметика за обрве, лажни нокти, препарати за негу ноктију, парфимеријски препарати, козметички препарати за негу коже тела, сапуни против знојења стопала, помаде у козметичке сврхе, шминка у праху, препарати за бријање, дезодорантни сапун, оловке за обрве, пудер у праху, за тоалетну употребу, козметичке боје, хигијенска средства против знојења, сапун против знојења, алкални детерџенти, препарати за сунчање, соли за купку, а не за медицинске сврхе, козметички препарати за мршављење, лепкови за уношење лажних трепавица, дезодоранси за личну употребу, омекшивачи рубља, марамице натопљене лосионом, лосиони за после бријања, лак за косу, маскара, потпури (мирисни), препарати за сјајање листова биљака.
Кл. 5: препарати за освежавање ваздуха, препарати за пречишћавање ваздуха, купка (соли за минералну воду), терапеутски препарати за купку, фармацеутски препарати, витамински препарати, детерџенти за медицинске сврхе, лековити чајеви, лековито биље, помаде за медицинске сврхе, фармацеутски препарати за негу коже, масти за опекотине од сунца, медицински препарати за раст косе, дезодоранси за одећу и текстил.
Кл. 8: маказице, пинцете, ручни апарати за уклањање длачица, кућишта за бријаче, виклери, бријачи, електрични или не-електрични, турпијице за нокте, електричне или не-електричне машинице за косу, електричне и неелектричне грицкалице за нокте, електричне или неелектричне.

(111) **62372** (181) **03.09.2020.**
(210) Ж- 2010-1488 (220) 03.09.2010.
(151) 23.02.2011.
(300) 40-2010-001146 05.03.2010. KR
(732) **Samsung Electronics Co., Ltd**; 416, Maetan-dong, Yeongtong-gu, Suwon-si, Gyeonggi-do, KR
(740) Живковић Зоран, Алексе Ненадовића 16, 11000 Београд
(540)

SAMSUNG XCOVER

(511) Кл. 9: мобилни телефони.

(111) **62373** (181) **03.09.2020.**
(210) Ж- 2010-1487 (220) 03.09.2010.
(151) 23.02.2011.
(300) 03.09.2010.
(732) **ELI LILLY AND COMPANY**; Lilly Corporate Center, Indianapolis, Indiana 46285, US
(740) Живковић Зоран, Алексе Ненадовића 16, 11000 Београд
(540)

FORTEO

(511) Кл. 5: фармацеутски препарати.

(111) **62374** (181) **24.06.2020.**
(210) Ж- 2010-1116 (220) 24.06.2010.
(151) 23.02.2011.
(300) 24.06.2010.
(732) **Samostalna zanatska kamenorezačka radnja ARANĐELOVAC GRANIT, PR Radoslav Vulićević**; Janićija Đurića 65, Aranđelovac-Bukovik, RS
(540)

(531) 02.01.08; 14.07.01; 24.09.02; 27.05.01; 29.01.12
(591) црна и златна

(511) Кл. 19: грађевински материјал (неметални) од гранита, споменици који су од гранита.
Кл. 40: обрађивање материјала (гранита).

(111) **62375** (181) **23.06.2020.**
(210) Ж- 2010-1109 (220) 23.06.2010.
(151) 23.02.2011.
(300) 23.06.2010.
(732) **PATENT CO. PREDUZEĆE ZA PROIZVODNJU, USLUGE I PROMET DOO**; Mišićevo, Vlade Ćetkovića 1A, 24211 Mišićevo, Subotica, RS
(540)

(531) 26.01.01; 26.01.05; 26.04.01; 26.04.10; 27.05.01; 27.05.10
(511) Кл. 5: ветеринарски препарати према YU патенту број 49303, односно аналогно Европском патенту, EP 1363854
Кл. 31: додатак храни за животиње, према YU патенту број 49303, односно аналогно Европском патенту, EP 1363854.
Кл. 35: оглашавање; организовање изложби и приредби у привредне или рекламне сврхе, које се услуге односе на интелектуалну, а посебно индустријску својину.
Кл. 42: стручне услуге у вези интелектуалне, нарочито индустријске својине.

(111) **62376** (181) **15.03.2020.**
(210) Ж- 2010-381 (220) 15.03.2010.
(151) 23.02.2011.
(300) 15.03.2010.
(732) **Društvo za proizvodnju osvežavajućih napitaka, plastične ambalaže i mineralne vode HEBA AD Bujanovac**; Industrijska zona bb, Bujanovac, RS
(740) Марко Остојић, 21400 Бачка Паланка, Новосадски пут бр. 9
(540)

(531) 01.15.23; 25.01.25; 26.01.02; 26.01.18; 26.04.10; 27.05.01
(591) бела, плава
(511) Кл. 32: минералне и содне воде.

(111) **62377** (181) **09.02.2020.**
(210) Ж- 2010-168 (220) 09.02.2010.
(151) 23.02.2011.
(300) 09.02.2010.
(732) **Specialty Fertilizer Products, LLC**; 11550 Ash Street, Suite 220, Leawood, Kansas 66211, US
(740) СД Петошевић и др., ОД., 11000 Београд, Веле Нигринове 16А
(540)

AVAIL

(511) Кл. 1: хемијски адитиви за ђубрива.

(111) **62378** (181) **15.09.2019.**
(210) Ж- 2009-1380 (220) 15.09.2009.
(151) 24.02.2011.
(300) 15.09.2009.
(732) **DECO CAKE d.o.o.**; 37000 Kruševac, Jasički put bb., RS
(540)

(531) 02.09.01; 05.07.01; 11.03.04; 25.01.01; 26.11.13; 27.05.07; 27.05.09; 27.05.19
(526) kafica
(511) Кл. 30: кафа.

(111) **62379** (181) **28.06.2020.**
(210) Ж- 2010-1129 (220) 28.06.2010.
(151) 24.02.2011.
(300) 28.06.2010.
(732) **MT TRADE d.o.o.**; 11000 Beograd, Resavska 74, RS
(740) Ана Мамић, 11000 Београд, Господар Јевремова 41
(540)

(531) 01.01.01; 05.07.10; 05.13.06; 05.13.07; 05.13.10; 26.01.01; 26.01.15; 26.01.18; 27.05.01; 27.05.13
(591) розе, црвена, беж, љубичаста, маслинасто зелена, пастелно зелена
(511) Кл. 29: месо, риба, живина и дивљач; месне прерађевине; конзервисано, замрзнуто, сушено и кувано воће и поврће; желеи, џемови, компоти; јаја, млеко и млечни производи; јестива уља и масти.

Кл. 30: кафа, чај, какао, шећер, пиринач, тапиока, саго, замена кафе; брашно и производи од житарица, хлеб, колачи и посластице, сладоледи; мед, меласа; квасац, прашак за пециво; со, сенф; сирће, сосови (као додаци); зачини; лед.
Кл. 43: услуге обезбеђивања хране и пића; привремени смештај.

(111) **62380** (181) **23.08.2020.**
(210) Ж- 2010-1455 (220) 23.08.2010.
(151) 24.02.2011.
(300) 23.08.2010.
(732) **TOYOTA JIDOSHA KABUSHIKI KAISHA (also trading as TOYOTA MOTOR CORPORATION)**; 1, Toyota-cho, Toyota-shi, Aichi-ken, JP
(740) Петошевић д.о.о., 11000 Београд, Веле Нигринове 16А
(540)

HYBRID SYNERGY DRIVE

(511) Кл. 12: аутомобили и њихови саставни, структурни делови, мотори за копнена возила, искључујући ланчане и каишасте зупчасте системе.

(111) **62381** (181) **20.08.2020.**
(210) Ж- 2010-1441 (220) 20.08.2010.
(151) 24.02.2011.
(300) 20.08.2010.
(732) **HYUNDAI MOTOR COMPANY**; 231, Yangjae-Dong, Seocho-Gu, Seoul, 137-938, KR
(740) Душан Л. Петошевић, адвокат, Козјачка 15, 11000 Београд
(540)

HYUNDAI iContact

(511) Кл. 12: путнички аутомобили, камиони; комбији; аутобуси; амбулантна кола; делови и опрема за аутомобиле; преноснички уређаји повезани унутар аутомобила за комуникацију са спољним изворима током рада возила; прикључни уређаји за пренос информација за аутомобиле; прикључни само-надзирани уређаји за аутомобилске прегледе.

(111) **62382** (181) **20.08.2020.**
(210) Ж- 2010-1440 (220) 20.08.2010.
(151) 24.02.2011.
(300) 20.08.2010.
(732) **HYUNDAI MOTOR COMPANY**; 231, Yangjae-Dong, Seocho-Gu, Seoul, 137-938, KR
(740) Душан Л. Петошевић, адвокат, Козјачка 15, 11000 Београд
(540)

BLUELINK

(511) Кл. 38: електронски пренос информација и података у вези са моторним возилима; пренос информација путем националних и међународних мрежа; пренос информација оптичким телекомуникационим мрежама; пренос вести; издавање инсталација за пренос података; издавање телекомуникационе опреме; предаја и пријем (трансмисија) информација из база података путем телекомуникационе мреже; услуге сервиса хитних порука путем телекомуникационих мрежа; комуникација разменом података; бежичне комуникације; VAN (Мрежа са Додатном Вредношћу) комуникација; сателитски пренос; пружање информација о телекомуникацијама; комуникација путем компјутерских терминала; пренос слика; пружање корисничког приступа глобалној компјутерској мрежи; пружање телекомуникационе везе ка глобалној компјутерској мрежи; Интернет емитовање.

(111) **62383** (181) **18.08.2020.**
(210) Ж- 2010-1426 (220) 18.08.2010.
(151) 24.02.2011.
(300) 18.08.2010.
(732) **BRITISH AMERICAN TOBACCO (Brands) Inc.**; 2711 Centerville Road, Suite 300, Wilmington, Delaware 19808, US
(740) Живко Мијатовић & Партнерс д.о.о., 11000 Београд, Таковска 58
(540)

LUCKY STRIKE XT

(511) Кл. 34: цигарете; дуван; производи од дувана; упаљачи; шибице; артикли за пушаче.

(111) **62384** (181) **09.12.2018.**
(210) Ж- 2008-2975 (220) 09.12.2008.
(151) 24.02.2011.
(300) 09.12.2008.
(732) **MARS, INCORPORATED**; 6885 Elm Street, McLean, VA 22101-3883, US
(740) Петошевић д.о.о., Веле Нигринове 16А, 11000 Београд
(540)

THE ORIGINAL SMART TREAT

(511) Кл. 31: храна за кућне љубимце, грицкалице, лаки међуоброци за кућне љубимце, јестиве награде и посластице за кућне љубимце.

(111) **62385** (181) **28.06.2020.**
(210) Ж- 2010-1124 (220) 28.06.2010.
(151) 24.02.2011.
(300) 28.06.2010.

(732) **Toyota Jidosha Kabushiki Kaisha (also trading as Toyota Motor Corporation)**; 1, Toyota-cho, Toyota-shi, Aichi-ken, JP
(740) Петошевић д.о.о., Веле Нигринове 16А, 11000 Београд
(540)

(531) 15.01.25; 26.04.06; 26.04.16; 26.04.18; 26.13.25; 27.05.21
(511) Кл. 12: аутомобили и њихови саставни, структурни делови.

(111) **62386** (181) **10.08.2020.**
(210) Ж- 2010-1382 (220) 10.08.2010.
(151) 24.02.2011.
(300) 10.08.2010.
(732) **Shyang Yun Tools Co., Ltd.**; NO.23, LANE 742, HEMU RD., SHENGANG TOWNSHIP, TAICHUNG COUNTY 429 TAIWAN (R.O.C.), TW
(740) Ристић Драгослав, адвокат, 11000 Београд, Цара Лазара 7
(540)

(531) 26.01.01; 26.01.06; 26.01.18; 27.05.01
(511) Кл. 6: ормари за алат са точкићима, металне кутије за алат, металне торбе за алат, метални штандови за алат, метални спремници, металне мердевине, металне дршке алата, металне канџе стеге, металне стеге, стоне металне стеге.
Кл. 7: пнеуматски алати, наиме, ударни кључеви, кључеви са једносмерним погоном (гедоре), брусилице, орбиталне брусилице, закивни чекићи, одвијачи, бушилице и ударне бушилице; електрични одвијачи; електрични портабл чекићи; електрични ручни чекићи; електричне тестере; електрични пиштољи за спонке; електрични чекићи; електрична хефталица; продужне ручице за електричне алате; ручни алати, али не мануални.
Кл. 8: мануални ручни алати, наиме, кључеви, лопате, назубљена клешта, маљеви, турпије, длета, тестере са рамом, ануларни алати за израду вијака, гедоре, маказе, инструменти за сечење цеви, секачи цеви, тестере, експандери, нарезивачи навоја, закивачи, инструменти за стругање, спатуле, стеге, алати за сечење, алати за длетовање, ливачка кашика, кључеви за нарезиваче навоја, греде са жљебовима и језичцима за челичне спојеве, алати за ваљање, баштенски алати, квадратна и кружна шила, продужне ручице за ручне алате.
Кл. 20: ормари за алат са точковима, не од метала, ормани са фијокама, штандови, витрине (намештај); дршке алата, не од метала; мердевине, не од метала; стоне стеге, не од метала; спремници, не од метала; радне клупе; столице; столови од метала; столице од метала; канцеларијски намештај; ормари од метала (намештај).

(111) **62387** (181) **08.07.2020.**
(210) Ж- 2010-1202 (220) 08.07.2010.
(151) 24.02.2011.
(300) 08.07.2010.
(732) **GENERAL MOTORS LLC, kompanija sa ograničenom odgovornošću organizovana po propisima države Delaware**; 300 Renaissance Center, Detroit, Michigan 48265-3000, US
(740) Зоран Живковић, 11000 Београд, Алексе Ненадовића 16
(540)

EQUINOX

(511) Кл. 12: моторна возила.

(111) **62388** (181) **12.07.2020.**
(210) Ж- 2010-1217 (220) 12.07.2010.
(151) 24.02.2011.
(300) 12.07.2010.
(732) **SUMITOMO RUBBER INDUSTRIES, LTD.**; 6-9, 3-chome, Wakinohama-cho, Chuo-ku, Kobe-shi, Hyogo, JP
(740) Живко Мијатовић & Партнерс, д.о.о., 11000 Београд, Таковска 58/14
(540)

(531) 26.03.23; 26.04.03; 26.04.04; 26.04.11; 26.13.25
(511) Кл. 12: гуме за сувоземна возила; гуме за моторна возила са два точка.

(111) **62389** (181) **12.06.2019.**
(210) Ж- 2009-910 (220) 12.06.2009.
(151) 24.02.2011.
(300) 12.06.2009.
(732) **AD "JAKA-80" Radoviš**; Radoviš, Maršal Tito br. 2, MK
(740) Драгољуб Ћосовић, 11000 Београд, Војводе Драгомира 27
(540)

(531) 25.01.01; 25.07.07; 26.04.02; 26.04.09; 26.11.08; 26.11.21; 27.05.01; 28.05.00; 29.01.13
(591) бела, жута, зелена
(511) Кл. 5: фармацеутски и ветеринарски препарати: санитарни препарати за медицинску употребу; дијететске супстанце које се користе у медицини; храна за бебе; фластери; материјали за завијање; материјали за пломбирање зуба; зубарска смола; дезинфекциона средства; препарати за уништавање штеточина; фунгициди, хербициди.

(111) **62390** (181) **10.08.2020.**
(210) Ж- 2010-1387 (220) 10.08.2010.
(151) 24.02.2011.
(300) 10.08.2010.
(732) **Nine West Development Corporation**; 1007 Orange Street, Suite 225, 19801 Wilmington, DE, US
(740) Петошевић д.о.о., Веле Нигринове 16А, 11000 Београд
(540)

CIRCA JOAN & DAVID

(511) Кл. 18: кожа и имитација коже, производи израђени од ових материјала који нису укључени у друге класе; животињска кожа, крзно; кофери и путне торбе; кишобрани, сунцобрани и штапови за ходање; бичеви, сарачка и седларска опрема; ташне.
Кл. 25: одећа, обућа, покривала за главу.
Кл. 35: услуге малопродаје.

(111) **62391** (181) **10.08.2020.**
(210) Ж- 2010-1389 (220) 10.08.2010.
(151) 24.02.2011.
(300) 10.08.2010.
(732) **Nine West Development Corporation**; 1007 Orange Street, Suite 225, 19801 Wilmington, DE, US
(740) Петошевић д.о.о., Веле Нигринове 16А, 11000 Београд
(540)

BANDOLINO

(511) Кл. 18: кожа и имитација коже, производи израђени од ових материјала који нису укључени у друге класе; животињска кожа, крзно; кофери и путне торбе; кишобрани, сунцобрани и штапови за ходање; бичеви, сарачка и седларска опрема; ташне.
Кл. 25: одећа, обућа, покривала за главу.
Кл. 35: услуге малопродаје.

(111) **62392** (181) **23.08.2020.**
(210) Ж- 2010-1454 (220) 23.08.2010.
(151) 24.02.2011.
(300) 23.08.2010.
(732) **Fabrika kotrljajućih ležajeva i kardana FKL a.d. Temerin**; Industrijska zona bb, Temerin, RS
(540)

(531) 14.01.15; 26.01.06; 27.05.01; 27.05.17; 29.01.04
(591) плава (РАЛ 5017)
(511) Кл. 6: кућишта за котрљајуће лежајеве.
Кл. 7: котрљајући лежајеви, карданска вратила, зупчаници, зупчасти преносници, погонски механизми.

(111) **62393** (181) **24.08.2020.**
(210) Ж- 2010-1457 (220) 24.08.2010.
(151) 24.02.2011.
(300) 24.08.2010.
(732) **ZU Apoteka ZEN**; Bulevar Despota Stefana 61, 11000 Beograd, RS
(540)

Progranol

(511) Кл. 5: фармацеутски и ветеринарски препарти; санитарни препарати за медицинску употребу; дијететске супстанце прилагођене за употребу у медицини, храна за бебе; фластери, материјали за завијање; материјали за пломбирање зуба, зубарска смола; дезинфекциона средства; препарати за уништавање штеточина; фунгициди, хербициди.

(111) **62394** (181) **11.08.2020.**
(210) Ж- 2010-1391 (220) 11.08.2010.
(151) 24.02.2011.
(300) 11.08.2010.
(732) **BARBERTON - CONSULTORES E SERVIÇOS LDA.**; Zona Franca de Madeira, Avenida Do Infante Nº50, Funchal, Madeira, PT
(740) Живко Мијатовић & Партнерс д.о.о., 11000 Београд, Таковска 58
(540)

BOTUCAL

(511) Кл. 33: рум и ликери од рума.

(111) **62395** (181) **08.09.2020.**
(210) Ж- 2010-1521 (220) 08.09.2010.
(151) 25.02.2011.
(300) 08.09.2010.
(732) **PREDUZEĆE ZA PROIZVODNJU I EMITOVANJE TV PROGRAMA FOX TELEVIZIJA D.O.O.**; 11000 Beograd, Autoput 22, RS
(740) Предраг Гроза, 11000 Београд, Царице Милице 3

(540)

(531) 01.15.09; 05.09.15; 27.03.01; 27.05.01; 27.05.07; 27.05.14; 27.05.17; 29.01.13
(591) бела, црвена, црна
(511) Кл. 35: оглашавање; вођење послова; пословно управљање; канцеларијски послови.
Кл. 38: телекомуникације.
Кл. 41: образовне услуге; припремање обуке; разонода; спортске и културне активности.

---

(111) **62396** (181) **08.09.2020.**
(210) Ж- 2010-1522 (220) 08.09.2010.
(151) 25.02.2011.
(300) 08.09.2010.
(732) **PREDUZEĆE ZA PROIZVODNJU I EMITOVANJE TV PROGRAMA FOX TELEVIZIJA D.O.O.**; 11000 Beograd, Autoput 22, RS
(740) Предраг Гроза, 11000 Београд, Царице Милице 3
(540)

(531) 11.01.03; 27.03.15; 27.05.01; 27.05.12; 27.05.17
(511) Кл. 35: оглашавање; вођење послова; пословно управљање; канцеларијски послови.
Кл. 38: телекомуникације.
Кл. 41: образовне услуге; припремање обуке; разонода; спортске и културне активности.

---

(111) **62397** (181) **28.01.2021.**
(210) Ж- 2011-103 (220) 28.01.2011.
(151) 25.02.2011.
(300) 28.01.2011.
(732) **PharmaSwiss d.o.o.**; Vojvode Stepe 18, 11000 Beograd, RS
(540)

REPIROL

(511) Кл. 5: лекови.

---

(111) **62398** (181) **14.05.2020.**
(210) Ж- 2010-810 (220) 14.05.2010.
(151) 25.02.2011.
(300) 14.05.2010.
(732) **SWISS HEALTH d.o.o.**; Terazije br. 29/III, 11000 Beograd, RS
(740) Градимир М. Жижић, Молерова бр. 29/II, 11000 Beograd
(540)

(531) 05.07.09; 25.01.01; 26.04.02; 26.04.18; 27.05.01; 27.05.09; 27.05.10; 29.01.15
(591) плава, љубичаста, сива, црвена, зелена
(511) Кл. 5: дијететски производи, наиме дијететски суплементи у облику таблета и инстант чајева са биљним екстрактом боровнице.

---

(111) **62399** (181) **27.07.2020.**
(210) Ж- 2010-1330 (220) 27.07.2010.
(151) 25.02.2011.
(300) 27.07.2010.
(732) **Preduzeće za proizvodnju i trgovinu FRUVITA d.o.o.**; 11070 Novi Beograd, Bulevar Mihajla Pupina br. 115đ, RS
(540)

(531) 24.17.04; 26.01.02; 26.01.04; 26.01.18; 27.05.01; 27.05.02; 27.05.17; 29.01.15
(591) жута, црвена, наранџаста, светло плава, тамно плава, бела
(511) Кл. 32: газирано пиће са воћним соком од цитруса.

---

(111) **62400** (181) **27.07.2020.**
(210) Ж- 2010-1331 (220) 27.07.2010.
(151) 25.02.2011.
(300) 27.07.2010.
(732) **United Balkan Trade d.o.o.**; Kosančićeva 78, Požarevac, RS
(740) Мамић Ана, дипл.правник, 11000 Београд, Господар Јевремова 41
(540)

(531) 05.01.05; 05.01.16; 27.05.01; 27.05.12; 27.05.13; 29.01.13
(591) браон, драп, окер
(526) stara rakija
(511) Кл. 33: ракија.
Кл. 43: услуге обезбеђивања хране и пића.

(111) **62401** (181) **04.06.2020.**
(210) Ж- 2010-986 (220) 04.06.2010.
(151) 25.02.2011.
(300) 04.06.2010.
(732) **Akciju sabiedriba "OLAINFARM"**; Latvijas Republika, LV-2114, Olaine, Rupnicu iela 5, LV
(740) Драгољуб М. Ћосовић, адвокат, 11000 Београд, Војводе Драгомира 27
(540)

NOOFEN НООФЕН

(511) Кл. 5: ноотропски фармацеутски препарати.

---

(111) **62402** (181) **14.07.2020.**
(210) Ж- 2010-1226 (220) 14.07.2010.
(151) 25.02.2011.
(300) 14.07.2010.
(732) **Akcionarsko društvo za poljoprivrednu proizvodnju "Mitrosrem"**; Trg Svetog Dimitrija bb, Sremska Mitrovica, RS
(540)

(531) 05.05.04; 05.07.04; 08.03.01; 08.07.05; 11.01.02; 25.01.01; 27.05.01; 27.05.02
(591) плава, црвена, жута, бела, црна
(511) Кл. 30: производи од житарица: кукурузне пахуљице.

---

(111) **62403** (181) **14.07.2020.**
(210) Ж- 2010-1227 (220) 14.07.2010.
(151) 25.02.2011.
(300) 14.07.2010.
(732) **Akcionarsko društvo za poljoprivrednu proizvodnju "Mitrosrem"**; Trg Svetog Dimitrija bb, Sremska Mitrovica, RS
(540)

(531) 05.07.04; 08.01.19; 08.03.01; 08.07.05; 11.01.02; 25.01.01; 27.05.01; 27.05.02; 29.01.15
(591) плава, црвена, смеђа, жута, бела, црна
(511) Кл. 30: производи од житарица: кукурузне пахуљице.

(111) **62404** (181) **14.07.2020.**
(210) Ж- 2010-1228 (220) 14.07.2010.
(151) 25.02.2011.
(300) 14.07.2010.
(732) **Akcionarsko društvo za poljoprivrednu proizvodnju "Mitrosrem"**; Trg Svetog Dimitrija bb, Sremska Mitrovica, RS
(540)

(531) 01.15.15; 05.07.09; 08.03.01; 08.07.25; 24.15.01; 24.15.11; 25.01.01; 27.05.01; 27.05.02; 29.01.15
(591) плава, црвена, бела, црна, жута, окер
(511) Кл. 30: производи од житарица: кукурузне пахуљице.

---

(111) **62405** (181) **14.07.2020.**
(210) Ж- 2010-1231 (220) 14.07.2010.
(151) 25.02.2011.
(300) 14.07.2010.
(732) **Akcionarsko društvo za poljoprivrednu proizvodnju "Mitrosrem"**; Trg Svetog Dimitrija bb, Sremska Mitrovica, RS
(540)

(531) 02.05.02; 02.05.18; 08.07.05; 25.01.01; 27.05.01; 27.05.02; 29.01.15
(591) тамно зелена, бела, жута, плава, црвена и црна
(511) Кл. 30: производи од житарица: наиме палента.

---

(111) **62406** (181) **13.10.2020.**
(210) Ж- 2010-1691 (220) 13.10.2010.
(151) 25.02.2011.
(300) 13.10.2010.
(732) **CINKARNA, Metalurško-kemična industrija Celje, d.d.**; Kidričeva 26, 3001 Celje, SI
(740) Плавша Драго, дипл.инжењер, 11000 Београд, Струмичка 51
(540)

CUPRABLAU - Z

(511) Кл. 1: хемијски производи који се употребљавају у индустрији, науци, фотографији, пољопривреди, хортикултури и шумарству;

непрерађене вештачке смоле, непрерађене пластичне материје; ђубрива; смеше за гашење ватре; препарати за каљење и заваривање; хемијске супстанце за очување намирница; материје за штављење; лепљиве супстанце које се употребљавају у индустрији.
Кл. 2: боје, фирнајзи, лакови, средства за заштиту од рђе и труљења дрвета; материје за бојење; средства за нагризање; сирове природне смоле; метали у облику листова и праха за сликаре, декоратере, штампаре и уметнике.
Кл. 5: фармацеутски, ветеринарски и санитарни препарати; диететске супстанце прилагођене за употребу у медицини, храна за бебе; фластери, материјали за завијање; материјали за пломбирање зуба, зубарска смола; дезинфекциона средства; препрати за уништавање штеточина; фунгициди, хербициди, средства за третирање, регулатори раста и физиотропи, средства за побољшање квашења и пријањања, средства за побољшање деловања хербицида, средства за побољшање деловања глифосата.

(111) **62407** (181) **08.10.2020.**
(210) Ж- 2010-1675 (220) 08.10.2010.
(151) 25.02.2011.
(300) 08.10.2010.
(732) **ZOVI ME D.O.O.**; Kneza Miloša 16, 11000 Beograd, RS
(740) Митић Д. Милош, адвокат, 11000 Београд, Чарли Чаплина 37
(540)

(531) 02.09.14; 26.01.14; 26.11.21; 27.05.01; 27.05.10; 29.01.12
(591) плава, наранџаста
(511) Кл. 37: поправљање, услуге инсталирања, нарочито услуге инсталације, одржавања и сервисирања рачунарске и телекомуникационе опреме.
Кл. 38: телекомуникације.
Кл. 42: развој компјутерског софтвера.

(111) **62408** (181) **18.10.2020.**
(210) Ж- 2010-1709 (220) 18.10.2010.
(151) 25.02.2011.
(300) 18.10.2010.
(732) **Telenor d.o.o.**; 11070 Novi Beograd, Omladinskih brigada 90, RS
(540)

(531) 26.04.02; 26.04.06; 26.04.09; 26.04.18; 27.05.01; 27.05.09; 27.05.24; 29.01.13
(591) црна, плава и бела
(511) Кл. 38: телекомуникације.

(111) **62409** (181) **19.10.2020.**
(210) Ж- 2010-1721 (220) 19.10.2010.
(151) 25.02.2011.
(300) 19.10.2010.
(732) **"TEHMAR PROMET" d.o.o.**; Beograd, Bulevar Arsenija Čarnojevića 49, RS
(740) Бојана Б. Станић, Браће Барух бр. 8/10, 11000 Београд
(540)

(531) 26.03.06; 26.04.02; 26.04.18; 26.07.15; 26.07.25; 27.05.01
(511) Кл. 5: фармацеутски и ветеринарски препарати; санитарни препарати за медицинску употребу; фластери; материјали за завијање; материјали за пломбирање зуба; зубарска смола; дезинфекциона средства.
Кл. 10: хируршки, медицински, зубарски и ветеринарски апарати и инструменти, нарочито комплети за инфузију, комплети за трансфузију, комплети за вене скалпа, хиподермалне игле, инсулински шприцеви, дводелни и троделни шприцеви, стерилне ланцете, зубарске игле; ортопедски артикли; хируршки материјали за зашивање.

(111) **62410** (181) **28.10.2020.**
(210) Ж- 2010-1765 (220) 28.10.2010.
(151) 25.02.2011.
(300) 28.10.2010.
(732) **Bristol-Myers Squibb Company a Delaware Corporation**; 345 Park Avenue, New York, New York 10154 , US
(740) Гордана Павловић, адвокат; Миливоје Павловић, адвокат, Мајке Јевросиме 53, 11000 Београд
(540)

YERVOY

(511) Кл. 5: фармацеутски препарати за људску употребу.

(111) **62411** (181) **01.11.2020.**
(210) Ж- 2010-1778 (220) 01.11.2010.
(151) 25.02.2011.
(300) 01.11.2010.

(732) **TRADUS ALLEGRO AG**; Baarerstrasse 2, CH-6300 Zug, CH
(740) Дејан П. Богдановић и остали, Влајковићева 28, 11000 Београд
(540)

ALLEGROUP

(511) Кл. 9: апарати за снимање, пренос и/или репродукцију звука, слика и/или података; компјутерски хардвер и уграђени програми; компјутерски софтвер који се односи на вођење on-line трговине; звучни и видео записи; кутије, спремишта, делови и опрема за сву наведену робу.
Кл. 35: вођење on-line трговине за договарање привредних трансакција између трећих лица у куповини и продаји робе; пружање услуга on-line рекламног простора за друге; пружање услуга оглашавања; омогућавање on-line огласног простора; услуге рекламирања и промовисања; услуге поређења цена; пружање сервисних информација које се односе на наведене услуге.
Кл. 38: телекомуникације; пренос порука и слика компјутерским путем; услуге мобилне телефоније; комуникација уз помоћ компјутерских терминала; комуникација путем телефона; услуге слања порука; изнајмљивање телекомуникационе опреме, укључујући телефоне; услуге телекомуникационог усмеравања и спајања; услуге за телефонске конференције; телефонске услуге; информације, савети и консултације које се односе на горе наведене услуге.

---

(111) **62412** (181) **05.11.2020.**
(210) Ж- 2010-1806 (220) 05.11.2010.
(151) 25.02.2011.
(300) 05.11.2010.
(732) **VLADIMIR MIRKOV; ENES HUBIJAR and VLADIMIR BARBIĆ**; Alberta Ajnštajna 26, 21000 Novi Sad, RS; Ive Andrića 9, 21000 Novi Sad, RS and Alberta Ajnštajna 26A, 21000 Novi Sad, RS
(740) Јелена Зелинчевић, адвокат, 21000 Нови Сад, Максима Горког 5
(540)

(531) 26.01.02; 26.01.04; 26.01.18; 27.05.01; 27.05.24; 29.01.12
(591) плава, бела
(511) Кл. 3: средства за бељење и друге супстанце за употребу у перионицама; препарати за чишћење, полирање, рибање и нагризање; сапуни; парфимерија, етерична уља, козметика, лосиони за косу; пасте за зубе.
Кл. 8: ручни алати и справе (којима се ручно управља); прибор за јело; хладно оружје; жилети.
Кл. 21: кућне или кухињске справе и посуде; чешљеви и сунђери; четке (изузев кичица); материјали за прављење четки; артикли који се користе при чишћењу; челична вуна; непрерађено или полупрерађено стакло (осим стакла које се користи у грађевинарству); стакларија, порцелан, фајанс, грнчарија и лончарија која није укључена у друге класе.

---

(111) **62413** (181) **08.11.2020.**
(210) Ж- 2010-1812 (220) 08.11.2010.
(151) 25.02.2011.
(300) 08.11.2010.
(732) **PharmaSwiss d.o.o.**; 11000 Beograd, Vojvode Stepe 18, RS
(540)

TRIMEPECT

(511) Кл. 5: лекови.

---

(111) **62414** (181) **08.11.2020.**
(210) Ж- 2010-1813 (220) 08.11.2010.
(151) 25.02.2011.
(300) 08.11.2010.
(732) **PharmaSwiss d.o.o.**; 11000 Beograd, Vojvode Stepe 18, RS
(540)

ANPECTIDINE

(511) Кл. 5: лекови.

---

(111) **62415** (181) **28.10.2020.**
(210) Ж- 2010-1761 (220) 28.10.2010.
(151) 28.02.2011.
(300) 28.10.2010.
(732) **METALAC a.d.**; Gornji Milanovac, Kneza Aleksandra 212, RS
(540)

(531) 27.05.01; 27.05.17; 27.05.21
(511) Кл. 11: апарати за осветљавање, грејање, производњу паре, кување, хлађење, сушење, вентилацију, снабдевање водом и за санитарне сврхе.
Кл. 16: хартија, картон и производи од њих, који нису укључени у друге класе.
Кл. 20: намештај, огледала, оквири за слике.
Кл. 21: кућне или кухињске справе и посуде.

(111) **62416** (181) **29.07.2015.**
(210) Ж- 2005-91013 (220) 29.07.2005.
(151) 28.02.2011.
(300) 29.07.2005.
(732) **A.D. "CENTROPROIZVOD", prehrambena industrija**; Dobanovački put bb, Surčin-Beograd, RS
(740) Адвокатска Канцеларија Карановић & Николић, Лепеничка 7, Београд
(540)

(531) 05.03.14; 27.05.01; 27.05.02; 27.05.21; 29.01.13
(591) жута, црвена, зелена
(511) Кл. 29: сушено и кувано воће; желе; слатко и шлагови.
Кл. 30: шећер млевени паковани; хлеб, бисквити, колачи, посластице, сладоледи; квасац, прашак за пециво; адитиви за пекарску индустрију.

---

(111) **62417** (181) **19.08.2020.**
(210) Ж- 2010-1435 (220) 19.08.2010.
(151) 28.02.2011.
(300) 19.08.2010.
(732) **Red Chip Company Ltd., a British Virgin Islands Corporation**; Trident Chambers, Wickhams Cay, P.O. Box 146, Road Town, Tortola, VG
(740) Ђосовић Драгољуб, 11000 Београд, Војводе Драгомира 27
(540)

(531) 26.01.16; 26.03.01; 26.03.07; 26.11.12; 27.05.01
(511) Кл. 9: апарати за креирање, снимање, пренос, обраду, обнову, манипулацију, и репродукцију звука; микрофони, микрофонска претпојачала, директне улазне кутије, конзоле за миксовање, динамички процесори, процесори ефеката сигнала, еквилајзери, скретнице и тзв. кросовери, аудио контролни уређаји, аудио интерфејс уређаји, уређаји за дистрибуцију сигнала, претварачи сигнала тзв. конвертори, појачивачи за слушалице, слушалице, појачала, звучници, апарати за контролу осветљења, рачунарски софтвер за креирање, снимање, пренос, обраду, обнову, манипулацију и репродукцију звука; приручници у електронском формату.
Кл. 15: музички инструменти; гитаре; клавири и пиано; синтисајзери; прибор за музичке инструменте инструменте; жице, торбе, кофери, футроле и педале за музичке инструменте и апарати за подешавање музичких инструмената; делови и прибор за сву напред наведену робу.

(111) **62418** (181) **25.10.2020.**
(210) Ж- 2010-1744 (220) 25.10.2010.
(151) 28.02.2011.
(300) 25.10.2010.
(732) **PharmaSwiss d.o.o.**; 11000 Beograd, Vojvode Stepe 18, RS
(540)

BONPERI

(511) Кл. 5: лекови.

---

(111) **62419** (181) **13.08.2020.**
(210) Ж- 2010-1401 (220) 13.08.2010.
(151) 28.02.2011.
(300) 13.08.2010.
(732) **Amgen Inc. (Delaware corporation)**; One Amgen Center Drive, Thousand Oaks, California 91320-1799, US
(740) Ристић Драгослав, адвокат, 11000 Београд, Цара Лазара 7
(540)

XGEVA

(511) Кл. 5: фармацеутски препарати.

---

(111) **62420** (181) **09.07.2020.**
(210) Ж- 2010-1213 (220) 09.07.2010.
(151) 28.02.2011.
(300) 09.07.2010.
(732) **Viacom International Inc.**; 1515 Broadway, New York, New York, 10036, US
(740) Мирољуб Белић, адвокат, Београд, Париска 20/I
(540)

SUNĐER BOB KOCKALONE

(511) Кл. 18: кишобрани, торбе, ранчеви, торбе које се носе уз тело, курирске торбе, торбе које се носе преко рамена, ручне торбе, новчаници и торбице, спортске торбе, руксаци, путне торбе, школске торбе, ташне, путне вреће, војничке торбе, торбе за плажу.
Кл. 25: купаћи костими и одећа за купање, мантили за купање, одећа за плажу, каишеви, сукње, капути, чарапе, обућа, траке, бандаже, џемпери, костими за ноћ вештица, костими за маскенбал, одећа за прерушавање, сценски костими, хаљине, рукавице, шорцеви, штитници за уши, шалови, одевни предмети за врат, пиџаме, панталоне, кошуље, мајице, скијашка одећа, спортске панталоне, штитници од сунца, визири, веш, суспендори, ролке, ветровке, јакне, одећа уз тело, капе и покривала за главу.
Кл. 28: игре и играчке, посебно, игре са картама, пикадо, лутке; лутке на надување; играчке на надување; играчке за прскање; играчке акционе фигуре и њихови додаци; самосталне машине за

видео игре које користе CD ROM-ове, самосталне машине за видео игре, самосталне машине за игру које се играју преко звучног излаза, друштвене игре; спортски реквизити, голф реквизити, бејзбол, фудбалске, лопте и лоптице, медицинке, бејзбол палице; скејтбордови; украси за јелке.
Кл. 41: забавне активности својствене обиласку забавног парка и атракција; забава, спортске и културне активности, укључујући продукцију радио и телевизијских програма; продукција филмова и забавних програма уживо: продукција анимираних филмова и телевизијских садржаја; услуге филмских и телевизијских студија; филмски програм, телевизијски програм, укључујући и живи програм и снимљене емисије, издавање књига, магазина и периодичних издања; пружање информација у вези услуга пријавиоца већем броју корисника преко глобалне компјутерске мреже или интернета или друге on line датотке; продукција плесних програма, музички шоу програма и додела видео награда; комични програми, игре и спортски догађаји пред живом публиком која се преноси уживо или снима за накнадно емитовање; живи музички концерти; емисије ТВ вести; организовање такмичења талената и догађаја, телевизијских и музичких награда, организација и презентација забавних садржаја у вези са стилом и модом; пружање информација у области забаве путем глобалне компјутерске мреже; забава својствена телевизијском програму који се емитује.

---

(111) **62421** (181) **07.12.2020.**
(210) Ж- 2010-2002 (220) 07.12.2010.
(151) 28.02.2011.
(300) 07.12.2010.
(732) **"Delta Maxi" d.o.o.**; Takovska br. 49, 11000 Beograd, RS
(540)

(531) 26.01.01; 26.01.04; 26.01.18; 27.05.01; 27.05.11; 27.05.13; 27.05.24; 29.01.12
(591) бордо и бела
(511) Кл. 3: средства за бељење и друге супстанце за употребу у перионицама, препарати за чишћење, полирање, рибање и нагризање, парфимерија, етерична уља, козметика, лосиони за косу, пасте за зубе.
Кл. 16: штампане ствари; књиговезачки материјал; фотографије; канцеларијски материјал; лепила за канцеларијске и кућне потребе; уметнички материјали; кичице; писаће машине и канцеларијски реквизити (изузев намештаја); материјали за обуку и наставу (изузев апарата); пластични материјал за паковање (који није укључен у друге класе); штампарска слова; клишеи.
Кл. 29: месо, риба, живина и дивљач, месне прерађевине; конзервисано, замрзнуто, сушено и кувано воће и поврће; желеи, џемови, компоти; јаја, млеко и млечни производи; јестива уља и масти.
Кл. 30: кафа, чај, какао, шећер, пиринач, тапиока, саго, замена кафе; брашно и производи од житарица, хлеб, колачи и посластице, сладоледи; мед, меласа; квасац, прашак за пециво; со, сенф; сирће, сосови (као додаци); зачини; лед.
Кл. 31: пољопривредни, вртларски и шумарски производи и зрневље који нису укључени у друге класе; живе животиње; свеже воће и поврће; семе, природне биљке и цвеће; храна за животиње, слад.
Кл. 32: пиво; минералне и содне воде и друга безалкохолна пића; пића од воћа и воћни сокови; сирупи и други препарати за производњу пића.
Кл. 33: алкохолна пића (изузев пива).

---

(111) **62422** (181) **04.10.2020.**
(210) Ж- 2010-1645 (220) 04.10.2010.
(151) 28.02.2011.
(300) 04.10.2010.
(732) **MGUM TECHNOLOGY d.o.o.**; 22310 Šimanovci, Novo naselje bb, RS
(740) Ана Мамић, Београд, Господар Јевремова 41
(540)

(531) 05.03.14; 27.05.01; 27.05.04; 27.05.10; 29.01.03
(591) светло зелена, тамно зелена
(511) Кл. 5: жвакаће гуме за медицинску употребу.
Кл. 30: жвакаће гуме (које нису за медицинску употребу).

---

(111) **62423** (181) **15.10.2020.**
(210) Ж- 2010-1700 (220) 15.10.2010.
(151) 28.02.2011.
(300) 15.10.2010.
(732) **Tarak Manufacturing Co. Ltd.**; 61 Hydepark Street, Glasgow G3 8BW, UK
(740) Петошевић д.о.о., Веле Нигринове 16А, 11000 Београд
(540)

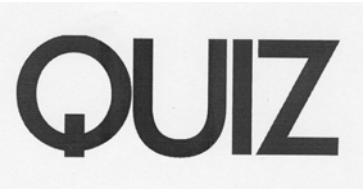

(531) 27.05.01

(511) Кл. 18: кожа и имитација коже и роба направљена од ових материјала која није укључена у друге класе; торбе, торбе за путовања, путни ковчези, кофери, актен-ташне, каишеви за кофере од коже или имитације коже, ручне торбе, торбе за одела, напртњаче, ранчеви, кофери; торбице, новчаници, футроле за кључеве, кесе; штапови за ходање, штапови, сарачка роба, каишеви.
Кл. 25: одећа, обућа, покривала за главу.
Кл. 35: скупљање различите робе, у корист других (изузимајући њихов транспорт), омогућавајући купцима да разгледају и набаве ову робу путем интернета, у малопродајним радњама, великопродајним дисконтним радњама, наручивањем преко каталога или путем електронских медија; малопродајне услуге; све у вези са робом у класама 18 и 25.

(111) **62424** (181) **10.08.2020.**
(210) Ж- 2010-1384 (220) 10.08.2010.
(151) 28.02.2011.
(300) 10.08.2010.
(732) **"TiM PEKARA" d.o.o.**; Novi Sad, Privrednikova 4a, RS
(740) Милан С. Петровић, Тадеуша Кошћушка 8, 11000 Београд
(540)

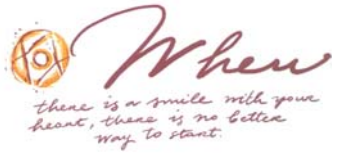

(531) 08.01.01; 27.05.10; 27.05.13; 29.01.13
(591) браон, наранџаста, бела
(511) Кл. 21: кућне или кухињске справе и посуде; чешљеви и сунђери; четке; материјали за прављење четки; артикли који се користе при чишћењу; челична вуна; непрерађено или полупрерађено стакло; стакларија, порцелан, фајанс, грнчарија и лончарија која није укључена у друге класе.
Кл. 29: месо, риба, живина и дивљач; месне прерађевине; конзервисано, сушено и кувано воће и поврће; желеи, џемови, компоти; јаја, млеко и млечни производи; јестива уља и масти.
Кл. 30: кафа, чај, какао, шећер, пиринач, тапиока, саго, замена кафе; брашно и производи од житарица, хлеб, колачи, посластице, сладоледи; мед, меласа, квасац, прашак за пециво; со, сенф; сирће, сосови (као зачини); зачини; лед.
Кл. 32: пиво, минералне и содне воде и друга безалкохолна пића; пића од воћа и воћни сокови; сирупи и други препарати за производњу пића.
Кл. 43: услуге обезбеђивања хране и пића; привремени смештај.

(111) **62425** (181) **03.09.2020.**
(210) Ж- 2010-1491 (220) 03.09.2010.
(151) 28.02.2011.
(300) 03.09.2010.
(732) **Russell Brands LLC**; One Fruit of the Loom Drive, Bowling Green, Kentucky 42103, US
(740) Петошевић д.о.о., Веле Нигринове 16А, 11000 Београд
(540)

(531) 27.05.01; 27.05.10; 27.05.17; 27.05.21
(511) Кл. 18: торбе, спортске торбе, атлетске торбе; траке, каишеви и ремени за употребу у спорту; новчаници и ташне; пртљаг (путничке торбе), ранчеви и руксаци.
Кл. 25: одећа; обућа; покривала за главу; спортска одећа; спортска обућа; спортска покривала за главу.

(111) **62426** (181) **03.09.2020.**
(210) Ж- 2010-1490 (220) 03.09.2010.
(151) 28.02.2011.
(300) 03.09.2010.
(732) **Russell Brands LLC**; One Fruit of the Loom Drive, Bowling Green, Kentucky 42103, US
(740) Петошевић д.о.о., 11000 Београд, Веле Нигринове 16А
(540)

(531) 27.05.01; 27.05.17; 27.05.21
(511) Кл. 18: торбе, спортске торбе, атлетске торбе; траке, каишеви и ремени за употребу у спорту; новчаници и ташне; пртљаг (путничке торбе), ранчеви и руксаци.
Кл. 25: одећа; обућа; покривала за главу; спортска одећа; спортска обућа; спортска покривала за главу.

(111) **62427** (181) **24.09.2020.**
(210) Ж- 2010-1587 (220) 24.09.2010.
(151) 28.02.2011.
(300) 24.09.2010.
(732) **UNITED PHOSPHORUS LIMITED**; Uniphos House, Madhu Park, 11th Road, Khar (w), Mumbai 400 052, IN
(740) Петошевић Д.О.О., Веле Нигринове 16А, 11000 Београд
(540)

LODIN

(511) Кл. 5: инсектициди, гермициди, хербициди, алгициди, паразитициди, фунгициди, пестициди и средства за уништавање корова који су укључени у класу 5 међународне класификације роба и услуга.

(111) **62428** (181) **31.08.2020.**
(210) Ж- 2010-1479 (220) 31.08.2010.
(151) 28.02.2011.
(300) 31.08.2010.
(732) **Fox International Channels (US), Inc.**; 1440 Sepulveda Boulevard, Los Angeles, California 90025, US
(740) Петошевић д.о.о., 11000 Београд, Веле Нигринове 16А
(540)

UTILISIMA

(511) Кл. 9: мелодије, слике, позадине, игре, и музика које је могуће преузети преко глобалне рачунарске мреже и бежичних уређаја; филмови, телевизијски програми и аудио-визуелни садржај са филмовима и телевизијским забавним програмом које је могуће преузети преко интернета; аудио и видео снимци са филмовима и телевизијским забавним програмом које је могуће преузети са интернета; компјутерски софтвер и апликације; унапред снимљене видео касете, DVD-и и CD-и са филмовима и телевизијским забавним програмом.
Кл. 16: часописи, постери; разгледнице; регистратори; свеске; фасцикле; блокчићи за белешке; празне свеске за писање дневника; подсетници; адресари; роковници; корице за књиге; налепнице за кола; налепнице; албуми за сличице; стони календари; зидни календари; граничници за књиге; сличице; фото албуми; урамљене и неурамљене фотографије; честитке; књиге; стрипови; хумористична литература; пенкала и оловке.
Кл. 38: телевизијско емитовање и услуге телевизијског преноса.
Кл. 41: продукција и дистрибуција телевизијских програма, филмова и аудио визуелне забаве; услуге забаве у вези са телевизијским програмом; приказивање и дистрибуција аудио и визуелних радова у вези са телевизијским програмом и филмовима; пружање онлајн информација у области телевизије, филмова и видео забаве преко интернета; пружање услуга телевизијске, филмске и видео забаве преко бежичних уређаја за комуникацију; услуге забаве, наиме, пружање услуга у вези са онлајн играма за компјутер; онлајн дневници, наиме, блогови који садрже личне информације и мишљења; организовање забаве и културних догађаја; забава у смислу надметања, такмичења и игара.

(111) **62429** (181) **16.06.2020.**
(210) Ж- 2010-1080 (220) 16.06.2010.
(151) 28.02.2011.
(300) 16.06.2010.
(732) **MEDICO UNO preduzeće za trgovinu d.o.o.**; Pančevački put br.38 Beograd-Krnjača, RS
(740) Адвокати др Миленко Манигодић и Ђуро Манигодић, 11111 Београд, Кумановска 2-б
(540)

ROLIPEXA

(511) Кл. 5: фармацеутски производи.

(111) **62430** (181) **18.03.2020.**
(210) Ж- 2010-412 (220) 18.03.2010.
(151) 28.02.2011.
(300) 18.03.2010.
(732) **TISACOOP d.o.o. EXPORT-IMPORT**; Put narodnih heroja 6, 24420 Kanjiža, RS
(540)

(531) 09.01.10; 11.01.04; 24.17.02; 25.01.18; 26.01.16; 27.01.12; 27.05.01; 29.01.13
(591) бела, црвена, зелена
(511) Кл. 29: месо, месне прерађевине, млеко и млечни производи сир биљног порекла, сви производи пореколом из Мађарске.

(111) **62431** (181) **06.09.2020.**
(210) Ж- 2010-1497 (220) 06.09.2010.
(151) 28.02.2011.
(300) 06.09.2010.
(732) **Karbon d.o.o.**; Bulevar Vožda Karađorđa 126, 34310 Topola, RS
(540)

karbokril

(531) 27.05.01; 27.05.17; 29.01.01
(591) наранџаста
(511) Кл. 1: лепљиве супстанце које се употребљавају у индустрији; хемијски производи који се употребљавају у индустрији, науци, фотографији, пољопривреди, хортикултури и шумарству; непрерађене вештачке смоле, непрерађене пластичне материје; ђубрива; смеше за гашење ватре; препарати за каљење и заваривање; хемијске супстанце за очување намирница; материје за штављење.

Кл. 2: боје, фирнајзи, лакови; средства за заштиту од рђе и труљења дрвета; материје за бојење; средства за нагризање; сирове природне смоле; метали у облику листова и праха за сликаре, декоратере, штампаре и уметнике.
Кл. 19: грађевински материјали (неметални); чврсте неметалне цеви за грађевине; асфалт, црна смола и битумен; неметалне преносне грађевине; споменици, који нису од метала.

---

(111) **62432** (181) **06.09.2020.**
(210) Ж- 2010-1505 (220) 06.09.2010.
(151) 28.02.2011.
(300) 06.09.2010.
(732) **Karbon d.o.o.**; Bulevar Vožda Karađorđa 126, 34310 Topola, RS
(540)

(531) 25.07.21; 26.04.02; 26.04.18; 27.05.01; 27.05.09; 27.05.24; 29.01.12
(591) наранџаста, црна
(511) Кл. 1: лепљиве супстанце које се употребљавају у индустрији; хемијски производи који се употребљавају у индустрији, науци, фотографији, пољопривреди, хортикултури и шумарству; непрерађене вештачке смоле, непрерађене пластичне материје; ђубрива; смеше за гашење ватре; препарати за каљење и заваривање; хемијске супстанце за очување намирница; материје за штављење.
Кл. 2: боје, фирнајзи, лакови; средства за заштиту од рђе и труљења дрвета; материје за бојење; средства за нагризање; сирове природне смоле; метали у облику листова и праха за сликаре, декоратере, штампаре и уметнике.
Кл. 19: грађевински материјали (неметални); чврсте неметалне цеви за грађевине; асфалт, црна смола и битумен; неметалне преносне грађевине; споменици, који нису од метала.

---

(111) **62433** (181) **30.09.2020.**
(210) Ж- 2010-1623 (220) 30.09.2010.
(151) 28.02.2011.
(300) 30.09.2010.
(732) **Knežević Goran**; 11000 Beograd, Branka Šljivića 19, RS
(540)

BEND "STRANCI U NOĆI"

(511) Кл. 41: образовне услуге; припремање обуке; разонода.

(111) **62434** (181) **09.11.2020.**
(210) Ж- 2010-1826 (220) 09.11.2010.
(151) 28.02.2011.
(300) 09.11.2010.
(732) **PREDUZEĆE ZA PROIZVODNJU I EMITOVANJE TV PROGRAMA FOX TELEVIZIJA DOO BEOGRAD**; Autoput 22, RS
(740) Предраг Гроза, 11000 Београд, Царице Милице 3
(540)

GLAS SRBIJE

(511) Кл. 35: оглашавање; вођење послова; пословно управљање; канцеларијски послови.
Кл. 38: телекомуникације.
Кл. 41: образовне услуге; припремање обуке; разонода; спортске и културне активности.

---

(111) **62435** (181) **09.11.2020.**
(210) Ж- 2010-1827 (220) 09.11.2010.
(151) 28.02.2011.
(300) 09.11.2010.
(732) **PREDUZEĆE ZA PROIZVODNJU I EMITOVANJE TV PROGRAMA FOX TELEVIZIJA DOO BEOGRAD**; Autoput 22, RS
(740) Предраг Гроза, 11000 Београд, Царице Милице 3
(540)

VOICE OF SERBIA

(511) Кл. 35: оглашавање; вођење послова; пословно управљање; канцеларијски послови.
Кл. 38: телекомуникације.
Кл. 41: образовне услуге; припремање обуке; разонода; спортске и културне активности.

---

(111) **62436** (181) **17.08.2020.**
(210) Ж- 2010-1424 (220) 17.08.2010.
(151) 28.02.2011.
(300) 17.08.2010.
(732) **PREDUZEĆE ZA MENADŽMENT I KONSTALTING B92 TRUST DOO**; Makedonska 21/16, 11000 Beograd, RS
(740) Кремењак Слободан, Маршала Бирјузова 1/IV, 11000 Београд
(540)

(531) 26.04.02; 26.04.16; 26.04.18; 26.11.08; 27.05.01; 27.05.24; 27.07.01; 29.01.13
(591) црна, бела, црвена
(511) Кл. 35: оглашавање; вођење послова; пословно управљање; канцеларијски послови.
Кл. 38: телекомуникације.
Кл. 41: образовне услуге; припремање обуке; разонода; спортске и културне активности.

(111) **62437** (181) **10.02.2020.**
(210) Ж- 2010-203 (220) 10.02.2010.
(151) 28.02.2011.
(300) 10.02.2010.
(732) **Koncern za proizvodnju i promet konditorskih proizvoda "BAMBI - BANAT" AD**; Bulevar Zorana Đinđića 8A, Beograd, RS
(740) Адвокати др Миленко Манигодић и Ђуро Манигодић, 11111 Београд, Кумановска 2-б
(540)

(531) 01.15.15; 03.04.07; 26.01.15; 26.04.02; 26.04.07; 26.04.10; 26.04.18; 27.05.01; 27.05.24; 29.01.15
(591) бордо, црвена, зелена, жута и бела
(526) bez trans masti
(511) Кл. 5: дијететске супстанце прилагођене за употребу у медицини, храна за бебе.
Кл. 30: кафа, чај, какао, шећер, пиринач, тапиока, саго, замена кафе; брашно и производи од житарица, хлеб, колачи и посластице, сладоледи; мед, меласа; квасац, прашак за пециво; со, сенф; сирће, сосови (као додаци); зачини; лед.

---

(111) **62438** (181) **30.03.2020.**
(210) Ж- 2010-496 (220) 30.03.2010.
(151) 28.02.2011.
(300) 30.03.2010.
(732) **Radojević Dejan**; Jurija Gagarina 141-21, 11000 Beograd, RS
(540)

(531) 26.11.07; 27.01.05; 27.05.01; 27.05.09; 28.05.00
(511) Кл. 9: опрема за обраду података, апарати за читање, штампање бар кодова и идентификационих картица, софтвер.
Кл. 35: заступање произвођача и промет опреме за обраду података, апарата за читање, штампање бар кодова и идентификационих картица и софтвера.
Кл. 37: инсталирање, одржавање и поправљање апарата за обраду података, апарата за читање, штампање бар кодова и идентификационих картица и софтвера.

---

(111) **62439** (181) **19.01.2021.**
(210) Ж- 2011-64 (220) 19.01.2011.
(151) 02.03.2011.
(300) 19.01.2011.
(732) **Industrija vode AQUA COM doo**; Kumodraška 290, 11000 Beograd, RS
(740) Адвокати др Миленко Манигодић и Ђуро Манигодић, 11111 Београд, Кумановска 2-б
(540)

SmeX

(511) Кл. 32: минералне воде.

---

(111) **62440** (181) **15.07.2020.**
(210) Ж- 2010-1256 (220) 15.07.2010.
(151) 02.03.2011.
(300) 15.07.2010.
(732) **Strauss Adriatic d.o.o.**; Šimanovci, Miloša Obilića 41, RS
(740) Адвокат Милан Петровић, 11000 Београд, Тадеуша Кошћушка 8
(540)

(531) 11.03.04; 29.01.12
(591) црвена, бела
(511) Кл. 30: кафа.

---

(111) **62441** (181) **22.11.2020.**
(210) Ж- 2010-1910 (220) 22.11.2010.
(151) 02.03.2011.
(300) 22.11.2010.
(732) **GAT Microencapsulation**; Gewerbezone 1, A-2490 Ebenfurth, AT
(740) Ана Мамић, 11000 Београд, Господар Јевремова 41
(540)

GAT VERTIS

(511) Кл. 5: пестициди.

---

(111) **62442** (181) **22.11.2020.**
(210) Ж- 2010-1911 (220) 22.11.2010.
(151) 02.03.2011.
(300) 22.11.2010.
(732) **GAT Microencapsulation**; Gewerbezone 1, A-2490 Ebenfurth, AT
(740) Ана Мамић, 11000 Београд, Господар Јевремова 41
(540)

GAT CENIT

(511) Кл. 5: пестициди.

(111) **62443** (181) **22.11.2020.**
(210) Ж- 2010-1912 (220) 22.11.2010.
(151) 02.03.2011.
(300) 22.11.2010.
(732) **GAT Microencapsulation**; Gewerbezone 1, A-2490 Ebenfurth, AT
(740) Ана Мамић, 11000 Београд, Господар Јевремова 41
(540)

GAT START

(511) Кл. 5: пестициди.

---

(111) **62444** (181) **22.11.2020.**
(210) Ж- 2010-1913 (220) 22.11.2010.
(151) 02.03.2011.
(300) 22.11.2010.
(732) **GAT Microencapsulation**; Gewerbezone 1, A-2490 Ebenfurth, AT
(740) Ана Мамић, 11000 Београд, Господар Јевремова 41
(540)

GAT ZEBRA

(511) Кл. 5: пестициди.

---

(111) **62445** (181) **15.07.2020.**
(210) Ж- 2010-1261 (220) 15.07.2010.
(151) 02.03.2011.
(300) 15.07.2010.
(732) **Trgovinsko preduzeće "B.G. PHARM" d.o.o.**; Visokog Stevana br. 31, 11000 Beograd, RS
(740) Бојана Б. Станић, Браће Барух бр. 8/10, 11000 Београд
(540)

(531) 02.09.01; 26.04.02; 26.04.14; 26.04.18; 27.05.01
(526) дата на реч "prostres"
(511) Кл. 5: дијететски суплементи намењени допуни нормалне исхране у стањима са повећаним потребама и умирењу благе нервне напетости, прилагођени за употребу у медицини.

---

(111) **62446** (181) **29.12.2014.**
(210) Ж- 1994-9878 (220) 29.12.1994.
(151) 02.03.2011.
(300) 29.12.1994.
(732) **A.D. CENTROPROIZVOD, prehrambena industrija**; Beograd - Surčin, Dobanovački put bb, RS
(740) "Карановић - Николић" ортачко адвокатско друштво, Ресавска 23, 11000 Београд
(540)

(531) 27.05.01; 27.05.02; 27.05.21
(511) Кл. 29: сушено и кувано воће; желе; слатко и шлагови.
Кл. 30: шећер, млевени паковани; хлеб, бисквити, колачи, посластице, сладоледи, квасац, прашак за пециво, адитиви за пекарску индустрију.

---

(111) **62447** (181) **15.04.2020.**
(210) Ж- 2010-627 (220) 15.04.2010.
(151) 04.03.2011.
(300) 15.04.2010.
(732) **MARBO PRODUCT d.o.o.**; Đorđa Stanojevića 14, 11000 Beograd, RS
(740) Петошевић д.о.о., Веле Нигринове 16А, 11000 Београд
(540)

(531) 08.01.06; 08.07.08; 19.03.03; 19.03.05; 26.01.18; 29.01.14
(591) зелена, светло зелена, црвена, бела, жута, браон, светла браон, црна
(511) Кл. 30: грицкалице на бази брашна, кукуруза, житарица и пиринча.

---

(111) **62448** (181) **15.04.2020.**
(210) Ж- 2010-628 (220) 15.04.2010.
(151) 04.03.2011.
(300) 15.04.2010.
(732) **MARBO PRODUCT d.o.o.**; Đorđa Stanojevića 14, 11000 Beograd, RS
(740) Петошевић д.о.о., Веле Нигринове 16А, 11000 Београд
(540)

(531) 05.07.06; 08.07.08; 19.03.03; 19.03.05; 26.01.18; 29.01.14

(591) црвена, светло црвена, бела, жута, браон, светла браон, црна
(511) Кл. 30: грицкалице на бази брашна, кукуруза, житарица и пиринча.

---

(111) **62449** (181) **15.04.2020.**
(210) Ж- 2010-629 (220) 15.04.2010.
(151) 04.03.2011.
(300) 15.04.2010.
(732) **MARBO PRODUCT d.o.o.**; Đorđa Stanojevića 14, 11000 Beograd, RS
(740) Петошевић д.о.о., Веле Нигринове 16А, 11000 Београд
(540)

(531) 08.03.12; 08.07.08; 19.03.03; 19.03.05; 26.01.18; 29.01.15
(591) плава, светло плава, бела, жута, браон, црвена, црна
(511) Кл. 30: грицкалице на бази брашна, кукуруза, житарица и пиринча.

---

(111) **62450** (181) **10.08.2020.**
(210) Ж- 2010-1383 (220) 10.08.2010.
(151) 07.03.2011.
(300) 10.08.2010.
(732) **"TiM PEKARA"**; Novi Sad, Privrednikova 4a, RS
(740) Милан С. Петровић, Тадеуша Кошћушка 8, 11000 Београд
(540)

(531) 08.01.01; 29.01.13
(591) наранџаста, браон, бела
(511) Кл. 21: кућне или кухињске справе и посуде; чешљеви и сунђери; четке; материјали за прављење четки; артикли који се користе при чишћењу; челична вуна; непрерађено или полупрерађено стакло; стакларија, порцелан, фајанс, грнчарија и лончарија која није укључена у друге класе.
Кл. 29: месо, риба, живина и дивљач; месне прерађевине; конзервисано, сушено и кувано воће и поврће; желеи, џемови, компоти; јаја, млеко и млечни производи; јестива уља и масти.
Кл. 30: кафа, чај, какао, шећер, пиринач, тапиока, саго, замена кафе; брашно и производи од житарица, хлеб, колачи, посластице, сладоледи; мед, меласа, квасац, прашак за пециво; со, сенф; сирће, сосови (као зачини); зачини; лед.
Кл. 32: пиво, минералне и содне воде и друга безалкохолна пића; пића од воћа и воћни сокови; сирупи и други препарати за производњу пића.
Кл. 43: услуге обезбеђивања хране и пића; привремени смештај.

---

(111) **62451** (181) **16.09.2020.**
(210) Ж- 2010-1544 (220) 16.09.2010.
(151) 07.03.2011.
(300) 16.09.2010.
(732) **"TiM PEKARA" d.o.o.**; 21000 Novi Sad, Privrednikova 4a, RS
(740) Милан Петровић, Тадеуша Кошћушка 8, 11000 Београд
(540)

(531) 08.01.01; 27.05.01; 27.05.10; 29.01.13
(591) браон, наранџаста, бела
(511) Кл. 21: кућне или кухињске справе и посуде; чешљеви и сунђери; четке; материјали за прављење четки; артикли који се користе при чишћењу; челична вуна; непрерађено или полупрерађено стакло; стакларија, порцелан, фајанс, грнчарија и лончарија која није укључена у друге класе.
Кл. 29: месо, риба, живина и дивљач; месне прерађевине; конзервисано, сушено и кувано воће и поврће; желеи, џемови, компоти; јаја, млеко и млечни производи; јестива уља и масти.
Кл. 30: кафа, чај, какао, шећер, пиринач, тапиока, саго, замена кафе; брашно и производи од житарица, хлеб, колачи, посластице, сладоледи; мед, меласа, квасац, прашак за пециво; со, сенф; сирће, сосови (као зачини); зачини; лед.
Кл. 32: пиво, минералне и содне воде и друга безалкохолна пића; пића од воћа и воћни сокови; сирупи и други препарати за производњу пића.
Кл. 43: услуге обезбеђивања хране и пића; привремени смештај.

---

(111) **62452** (181) **13.09.2020.**
(210) Ж- 2010-1529 (220) 13.09.2010.
(151) 07.03.2011.
(300) 13.09.2010.
(732) **S.C. Johnson & Son, Inc.**; 1525 Howe Street, Racine, WI 53403-2236, US

(740) Петошевић Душан, адвокат, 11000 Београд, Козјачка 15
(540)

GLADE REFRESH-AIR

(511) Кл. 5: освеживачи ваздуха; средства за уклањање непријатних мириса из ваздуха; средства за прочишћавање ваздуха; средства за стерилисање ваздуха; средства за уклањање непријатних мириса из тканина; средства за уклањање непријатних мириса из тепиха и соба.

(111) **62453** (181) **13.09.2020.**
(210) Ж- 2010-1530 (220) 13.09.2010.
(151) 07.03.2011.
(300) 13.09.2010.
(732) **S.C. Johnson & Son, Inc.**; 1525 Howe Street, Racine, WI 53403-2236, US
(740) Петошевић Душан, адвокат, 11000 Београд, Козјачка 15
(540)

GLADE DISCREET

(511) Кл. 5: освеживачи ваздуха; средства за уклањање непријатних мириса из ваздуха; средства за прочишћавање ваздуха; средства за стерилисање ваздуха; средства за уклањање непријатних мириса из тканина; средства за уклањање непријатних мириса из тепиха и соба.

(111) **62454** (181) **18.05.2019.**
(210) Ж- 2009-783 (220) 18.05.2009.
(151) 08.03.2011.
(300) 18.05.2009.
(732) **Universal Protein Supplements Corporation d/b/a Universal Nutrition**; 3 Terminal Road, New Brunswick, New Jersey 08901, US
(740) Драгољуб Ћосовић, 11000 Београд, Војводе Драгомира 27
(540)

ANIMAL PAK

(511) Кл. 5: додаци храни за дијететске потребе, нутриционистички додаци за дијететске потребе који садрже витамине, минерале, нутриценте за тренинге и друге додатке за дијететске потребе.

(111) **62455** (181) **27.10.2020.**
(210) Ж- 2010-1760 (220) 27.10.2010.
(151) 09.03.2011.
(300) 27.10.2010.
(732) **FINLANDIA VODKA WORLDWIDE Ltd. a Finland corporation**; Porkkalankatu 24, 00180 Helsinki, FI
(740) Гордана Павловић, адвокат; Миливоје Павловић, адвокат, Мајке Јевросиме 53, 11000 Београд
(540)

FINLANDIA
VODKA OF FINLAND

(531) 03.04.07; 03.04.23; 27.05.01; 27.05.10
(511) Кл. 33: алкохолна пића, укључујући жестока пића, наиме вотка.

(111) **62456** (181) **05.07.2020.**
(210) Ж- 2010-1173 (220) 05.07.2010.
(151) 11.03.2011.
(300) 05.07.2010.
(732) **VATERPOLO KLUB PARTIZAN RAIFFEISEN**; 11040 Beograd, Crnotravska 4, RS
(540)

PARTIZAN ПАРТИЗАН VATERPOLO KLUB

(531) 01.01.01; 01.01.04; 01.15.05; 26.01.01; 26.01.05; 26.01.13; 26.01.21; 26.11.07; 27.05.01; 27.05.17
(591) црна, црвена, бела, златна
(511) Кл. 16: хартија, картон и производи од њих, који нису укључени у друге класе; штампане ствари; књиговезачки материјал; фотографије; канцеларијски материјал; лепила за канцеларијске и кућне потребе; уметнички материјали; кичице; материјали за обуку и наставу (изузев апарата).
Кл. 24: текстил и текстилни производи који нису обухваћени другим класама; прекривачи за кревете и столове.
Кл. 25: одећа, обућа, покривала за главу.

(111) **62457** (181) **24.09.2020.**
(210) Ж- 2010-1585 (220) 24.09.2010.
(151) 14.03.2011.
(300) 24.09.2010.
(732) **"Strauss Adriatic" d.o.o.**; Šimanovci, Miloša Obilića 41, RS
(740) Милан Петровић, Тадеуша Кошћушка 8, 11000 Београд
(540)

POMIRIŠI!

(531) 01.15.11; 11.03.04; 24.17.04; 27.03.15; 27.05.01

(511) Кл. 21: кућне или кухињске справе и посуде; чешљеви и сунђери; четке; материјали за прављење четки; артикли који се користе при чишћењу; челична вуна; непрерађено или полупрерађено стакло; стакларија, порцелан, фајанс, грнчарија и лончарија која није укључена у друге класе.
Кл. 29: месо, риба, живина и дивљач; месне прерађевине; конзервисано, сушено и кувано воће и поврће; желеи, џемови, компоти; јаја, млеко и млечни производи; јестива уља и масти.
Кл. 30: кафа, чај, какао, шећер, пиринач, тапиока, саго, замена кафе; брашно и производи од житарица, хлеб, колачи, посластице, сладоледи; мед, меласа, квасац, прашак за пециво; со, сенф; сирће, сосови; зачини; лед.
Кл. 35: оглашавање; вођење послова; пословно управљање; канцеларијски послови.
Кл. 43: услуге обезбеђивања хране и пића; привремени смештај.

(111) **62458** (181) **13.05.2018.**
(210) Ж- 2008-1197 (220) 13.05.2008.
(151) 15.03.2011.
(300) 13.05.2008.
(732) **DJORDANS OOD**; Otets Paisii Str., No. 38, 6300 Haskovo, BG
(740) Граовац Д. Зоран, адвокат, 11160 Београд, Миријевски венац 4
(540)

(531) 02.03.01; 09.07.01; 27.05.01; 27.05.13
(511) Кл. 18: кожа и имитација коже, производи израђени од ових материјала који нису укључени у друге класе; животињска кожа, крзно; кофери и путне торбе; кишобрани, сунцобрани и штапови за ходање; бичеви, сарачка и седларска опрема.
Кл. 22: ужад, канапи, мреже, шатори, надстрешнице од цираде, цираде, једра, вреће (џакови) и торбе (које нису укључене у друге класе); материјали за пуњење мадраца (осим од гуме или пластике); сирове влакнасте текстилне материје.
Кл. 25: одећа, обућа, покривала за главу.

(111) **62459** (181) **15.01.2019.**
(210) Ж- 2009-46 (220) 15.01.2009.
(151) 15.03.2011.
(300) 15.01.2009.
(732) **Akcionersko društvo za proizvodstvo i promet na vino "VINARSKA VIZBA-TIKVEŠ" eksport import AD Skopje**; Trifun Hadži Janev br. 5, 1000 Skopje, MK
(740) Манигодић М. Ђуро, адвокат, 11000 Београд, Кумановска 2Б
(540)

(531) 27.05.01; 27.05.09; 27.05.13; 27.05.17
(511) Кл. 33: вино.

(111) **62460** (181) **17.03.2020.**
(210) Ж- 2010-403 (220) 17.03.2010.
(151) 17.03.2011.
(300) 17.03.2010.
(732) **Strauss Adriatic d.o.o.**; Šimanovci, Miloša Obilića 41, RS
(740) Милан Петровић, Тадеуша Кошћушка 8, 11000 Београд
(540)

(531) 05.07.01; 11.03.04; 25.01.19; 27.05.01; 27.05.09; 27.05.21; 29.01.15
(591) бела, црна, браон, жута, наранџаста.
(511) Кл. 21: шоље за кафу.
Кл. 30: кафа.

(111) **62461** (181) **19.03.2020.**
(210) Ж- 2010-437 (220) 19.03.2010.
(151) 17.03.2011.
(300) 19.03.2010.
(732) **WEDDING HOUSE d.o.o.**; Nemanjina 4, 11000 Beograd, RS
(540)

(531) 27.05.01; 27.05.09; 27.05.13; 27.05.22; 29.01.12
(591) црна и розе
(511) Кл. 25: одећа, обућа, покривала за главу.

(111) **62462** (181) **18.11.2020.**
(210) Ж- 2010-1897 (220) 18.11.2010.
(151) 17.03.2011.
(300) 18.11.2010.
(732) **BERLIN-CHEMIE AG**; Glienicker Weg 125, D-12489 Berlin, DE

(740) Драгољуб Ћосовић, 11000 Београд, Војводе Драгомира 27
(540)

KALISTRA

(511) Кл. 5: фармацеутски препарати за лечење есенцијалног повишеног крвног притиска.

(111) **62463** (181) **26.07.2020.**
(210) Ж- 2010-1322 (220) 26.07.2010.
(151) 17.03.2011.
(300) 26.07.2010.
(732) **McDonald`s International Property Company, Limited**; 2711 Centerville Road, Suite 400, Wilmington, Delaware 19808, US
(740) Живковић Зоран, дипл. инжењер, 11000 Београд, Алексе Ненадовића 16
(540)

McTOAST

(511) Кл. 30: сендвичи са месом, сендвичи са сиром, сендвичи са месом и сиром.

(111) **62464** (181) **22.11.2020.**
(210) Ж- 2010-1906 (220) 22.11.2010.
(151) 17.03.2011.
(300) 22.11.2010.
(732) **Preduzeće za proizvodnju, promet i usluge "ERGA CO". D.O.O.**; Jurija Gagarina 243/39, 11070 Beograd, RS
(740) Слободан Влаховић, адвокат, 11070 Нови Београд, Радоја Дакића 35/32
(540)

laff

(511) Кл. 3: сапуни; течни сапуни; парфимеријски производи; етерична уља; пасте за зубе; препарати за чишћење зубних протеза; препарати за негу коже, тела, очију и косе, за козметичку употребу; не-медицински препарати за купање; маскаре, креме, лосиони и гелови за козметичку употребу; препарати за чишћење коже и лица за личну употребу; лосиони за купање; дезодоранси за личну употребу; средства за чишћење; средства за влажење; аеросол и освеживачи ваздуха; детерџенти; омекшивачи; гелови за косу; боје за косу; лакови за нокте; шампони; препарати за негу ноктију; препарати за депилацију; сапуни за бријање; козметички препарати за тамњење коже; колоњска вода; сапуни за дезинфекцију; дезодоришући сапуни; тоалетне воде; препарати за бријање; препарати за увијање косе и намештање косе; препарати за туширање; лосиони пре бријања и после бријања; пудер за тело; тоалетни артикли; средства за бојење, нијансирање и лосиони, сви за косу и браду; препарати за избељивање косе; лак за косу; антиперспирантни сапун; соли за купање, не у медицинске сврхе; млеко за чишћење за хигијенске сврхе; козметички комплети; козметика; шминка за очи; козметика за обрве; оловке за обрве; штапићи за чишћење уха; руж за усне; лакови за нокте; шминка; препарати за шминкање; препарати за скидање шминке; маске за лепоту; средство за полирање ноктију; препарати за уклањање лака са ноктију; уља за козметичку намену; уља за парфеме и мирисе; парфеми; креме и препарати за сунчање; пудер од талка; влажне марамице импрегниране средствима за личну хигијену, мирисима и/или козметичким средствима; убруси импрегнирани препаратима за чишћење; влажне марамице и убруси који садрже не-лековите хигијенске препарате; производи за хигијену.
Кл. 5: санитарни препарати за медицинску употребу; дезинфекциона средства; санитарни препарати за личну хигијену; дезодоранси који нису за личну употребу.
Кл. 16: папир, картон и производи од њих, који нису укључени у друге класе; папирнати производи за употребу у домаћинству и за санитарну употребу, као што су убруси за кухиње и купатило, ролне за кухињу, салвете, марамице, тоалет папир.

(111) **62465** (181) **22.11.2020.**
(210) Ж- 2010-1908 (220) 22.11.2010.
(151) 21.03.2011.
(300) 22.11.2010.
(732) **Diva World Pty Limited**; Level 14, 71 Macquarie Street, Sydney, NSW 2000, AU
(740) Петошевић д.о.о., Веле Нигринове 16А, 11000 Београд
(540)

(531) 02.09.01; 27.05.01; 27.05.07
(511) Кл. 14: накит; драго камење; драгоцени метали и њихове легуре и производи од драгоцених метала или са превлаком од њих који нису укључени у друге класе.
Кл. 26: аксесоари за косу и украси за косу.
Кл. 35: малопродаја, велепродаја и франшизинг накита, драгог камења, драгоцених метала и њихових легура и производа од драгоцених метала или са превлаком од њих, аксесоара за косу и украса за косу.

(111) **62466** (181) **22.11.2020.**
(210) Ж- 2010-1909 (220) 22.11.2010.
(151) 21.03.2011.
(300) 22.11.2010.
(732) **Diva World Pty Limited**; Level 14, 71 Macquarie Street, Sydney, NSW 2000, AU
(740) Петошевић д.о.о., Веле Нигринове 16А, 11000 Београд
(540)

DIVA

(511) Кл. 14: накит; драго камење; драгоцени метали и њихове легуре и производи од драгоцених метала или са превлаком од њих који нису укључени у друге класе.
Кл. 26: аксесоари за косу и украси за косу.
Кл. 35: малопродаја, велепродаја и франшизинг накита, драгог камења, драгоцених метала и њихових легура и производа од драгоцених метала или са превлаком од њих, аксесоара за косу и украса за косу.

(111) **62467** (181) **23.02.2021.**
(210) Ж- 2011-242 (220) 23.02.2011.
(151) 21.03.2011.
(300) 23.02.2011.
(732) **Industrija vode AQUA COM doo**; Kumodraška 290, 11000 Beograd, RS
(740) др Миленко Манигодић и Ђуро Манигодић, Кумановска 2-б, 11111 Београд
(540)

LIKE

(511) Кл. 32: минералне воде.

(111) **62468** (181) **10.06.2020.**
(210) Ж- 2010-1052 (220) 10.06.2010.
(151) 21.03.2011.
(300) 10.06.2010.
(732) **AD "IMLEK"** ; Industrijsko naselje bb, 11213 Padinska skela, RS
(540)

(531) 26.11.12; 27.05.01; 27.05.11; 27.05.17
(511) Кл. 29: пробиотски млечни производ.

(111) **62469** (181) **09.08.2015.**
(210) Ж- 2005-91050 (220) 09.08.2005.
(151) 21.03.2011.
(300) 09.08.2005.
(732) **A.D. "CENTROPROIZVOD", prehrambena industrija**; Surčin-Beograd, Dobanovački put bb, RS
(740) "Карановић-Николић" ортачко адвокатско друштво, Ресавска 23, 11000 Београд
(540)

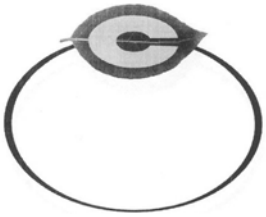

(531) 05.03.14; 26.01.02; 26.01.19; 27.05.01; 27.05.17; 27.05.21
(511) Кл. 29: сушено и кувано воће; желеи; слатко и шлагови.
Кл. 30: шећер млевени паковани; хлеб; бисквити; колачи; посластице; сладоледи; квасац; прашак за пециво; адитиви за пекарску индустрију.

(111) **62470** (181) **29.07.2015.**
(210) Ж- 2005-91012 (220) 29.07.2005.
(151) 21.03.2011.
(300) 29.07.2005.
(732) **A.D. "CENTROPROIZVOD", prehrambena industrija**; Dobanovački put bb, Surčin-Beograd, RS
(740) "Карановић-Николић" ортачко адвокатско друштво, Ресавска 23, 11000 Београд
(540)

(531) 05.03.14; 27.05.01; 27.05.12; 27.05.17; 27.05.21; 29.01.12
(591) жута, зелена
(511) Кл. 29: сушено и кувано воће; желеи; слатко и шлагови.
Кл. 30: шећер млевени паковани; хлеб; бисквити; колачи; посластице; сладоледи; квасац; прашак за пециво; адитиви за пекарску индустрију.

(111) **62471** (181) **29.04.2019.**
(210) Ж- 2009-9713 (220) 29.04.2009.
(151) 22.03.2011.
(300) 29.04.2009.
(732) **A.D. CENTROPROIZVOD, prehrambena industrija**; Dobanovački put bb, 11271 Surčin, Beograd, RS
(740) "Карановић-Николић" ортачко адвокатско друштво, Ресавска 23, 11000 Београд
(540)

(531) 05.03.14; 25.01.06; 26.01.02; 26.01.04; 26.01.21; 27.05.17; 27.05.21
(511) Кл. 30: какао; шећер: тапиока; колачи; посластице; сладоледи; лед, бисквити, мед; квасац; прашак за пециво; крем од бадема; сирова марципан смеса; декор производи од шећера за украшавање јелки; бесквасни хлеб; двопек; ситно бисквит пециво; бисквити од слада; кекс; обланде; земичке; марципан; производи од шећера; декор производи од шећера; учвршћивач за шлаг; кремасти ледени десерт; палачинке; есенција за храну, осим етеричних есенција и есенцијалних уља; густин; јестиви украси за колаче; природни заслађивачи; хлеб са ђумбиром; медењаци; јестиви скроб; ензими за теста; слатки фондани; ситни колачи: арома за колаче, осим есенцијалних уља; ароме осим есенцијалних уља за колаче; прашак за прављење колача; мешавина за колаче; тесто за колаче; пецива; учвршчивач за сладолед; смеса за прављење сладоледа; згушњивачи за ледене дезерте; лед, природни или вештачки; лед за освежавање; глукоза за јело; грожђани шећер за јело; глутен за јело; млевене житарице за људску исхрану; кисело тесто; квасац; пуслице; хлеб; малтоза; меласа за исхрану; сируп од меласе; мента за слаткише; пецива (фина); петит-беурре кекс са маслацем; ролнице од хлеба; пице; пудинзи; гриз; брашно од тапиоке за исхрану; торте; ванила зачин; ванилин (замена за ванилу); паштете пецива; јестиви лед; сладолед у праху; прашак за прављење сладоледа; слаткиши од бадема; слаткиши од кикирикија; ароме осим есенцијалних уља; ароме за прављење пића, осим есенцијалних уља; кандирани шећер за јело; чипс од житарица; екстракт слада за јело; слад за људску исхрану; крекери; крем пудинг са јајима од ваниле; слаткиши од воћног желеа; слаткиши од желеа; мусли; колачи од пиринча; квасац у таблетама, није за медицинске сврхе; такоси; тортиље; презла; алва; киш, тарт; прашак за пециво; сода бикарбона.

---

(111) **62472** (181) **18.06.2020.**
(210) Ж- 2010-1094 (220) 18.06.2010.
(151) 22.03.2011.
(300) 18.06.2010.
(732) **Bečejska pekara AD**; Industrijska zona BB, 21220 Bečej, RS
(540)

(531) 05.03.20; 27.05.01; 27.05.04; 27.05.13
(591) бела, сива
(511) Кл. 30: брашно и производи од житарица, хлеб, колачи и посластице.

---

(111) **62473** (181) **15.12.2019.**
(210) Ж- 2009-1964 (220) 15.12.2009.
(151) 23.03.2011.
(300) 15.12.2009.
(732) **Preduzeće za proizvodnju i trgovinu "FRUVITA", d.o.o.**; Bulevar Mihajla Pupina br. 115đ, RS
(540)

(531) 26.01.02; 26.01.04; 26.01.18; 27.05.01; 27.05.02; 27.05.09; 29.01.15
(591) бела, тамно плава, светло плава, тегет плава, црвена, наранџаста, жута, светло зелена, тамно зелена, браон, бордо
(511) Кл. 35: оглашавање.

---

(111) **62474** (181) **15.04.2020.**
(210) Ж- 2010-1327 (220) 15.04.2010.
(151) 23.03.2011.
(300) 15.04.2010.
(732) **MILICA GURUNG**; Narodnog fronta 89, Novi Sad, RS
(540)

(531) 27.05.01; 27.05.13
(511) Кл. 18: ташна од природне коже и од имитације коже, каиш од природне коже и од имитације коже.

---

(111) **62475** (181) **20.10.2020.**
(210) Ж- 2010-1728 (220) 20.10.2010.
(151) 23.03.2011.
(300) 20.10.2010.
(732) **HUA XING d.o.o.**; Jurija Gagarina 89/lok. 141, 11070 Novi Beograd, RS
(740) Ћосовић М. Драгољуб, адвокат, Војводе Драгомира 27, 11000 Београд
(540)

(531) 26.03.23; 26.04.01; 26.04.16; 26.04.18; 27.05.01
(591) сива и бела
(511) Кл. 25: одећа, обућа, покривала за главу.
Кл. 35: оглашавање; вођење послова; пословно управљање; канцеларијски послови, нарочито услуге малопродаје коже, производа од коже, одеће, обуће, покривала за главу, амбалажа за паковање, каталога.

(111) **62476** (181) **23.11.2020.**
(210) Ж- 2010-1914 (220) 23.11.2010.
(151) 23.03.2011.
(300) 23.11.2010.
(732) **"Ecoagri Serbia" akcionarsko društvo za poljoprivrednu proizvodnju Bela Crkva**; Sonje Marinković bb, 26340 Bela Crkva, RS
(540)

(531) 05.03.16; 05.05.20; 27.05.01; 27.05.07; 27.05.10; 29.01.12
(591) зелена, бела
(511) Кл. 1: хемијски производи који се употребљавају у пољопривреди: ђубрива.
Кл. 5: фунгициди, хербициди.
Кл. 16: хартије, картон и производи од њих, који нису укључени у друге класе.
Кл. 31: пољопривредни, вртларски и шумарски производи и зрневље који нису укључени у друге класе: живе животиње, семе и храна за животиње.
Кл. 35: вођење послова, пословно управљање.
Кл. 44: агрикултура.

(111) **62477** (181) **23.11.2020.**
(210) Ж- 2010-1916 (220) 23.11.2010.
(151) 23.03.2011.
(300) 23.11.2010.
(732) **Rotam Agrochem International Company Ltd**; 7/F., Cheung Tat Centre, 18 Cheung Lee Street, Chai Wan, HK
(740) Драгослав Ристић, Владан Малешевић, 11000 Београд, Цара Лазара бр. 7
(540)

Stoy

(511) Кл. 5: инсектициди, хербициди, фунгициди, паразитициди, препарати за уништавање штеточина.

(111) **62478** (181) **23.11.2020.**
(210) Ж- 2010-1917 (220) 23.11.2010.
(151) 23.03.2011.
(300) 23.11.2010.
(732) **Rotam Agrochem International Company Ltd**; 7/F., Cheung Tat Centre, 18 Cheung Lee Street, Chai Wan, HK
(740) Драгослав Ристић, Владан Малешевић, 11000 Београд, Цара Лазара бр. 7
(540)

Bounty

(511) Кл. 5: инсектициди, хербициди, фунгициди, паразитициди, препарати за уништавање штеточина.

(111) **62479** (181) **23.11.2020.**
(210) Ж- 2010-1918 (220) 23.11.2010.
(151) 23.03.2011.
(300) 23.11.2010.
(732) **Rotam Agrochem International Company Ltd**; 7/F., Cheung Tat Centre, 18 Cheung Lee Street, Chai Wan, HK
(740) Драгослав Ристић, Владан Малешевић, 11000 Београд, Цара Лазара бр. 7
(540)

Chenkar

(511) Кл. 5: инсектициди, хербициди, фунгициди, паразитициди, препарати за уништавање штеточина.

(111) **62480** (181) **23.11.2020.**
(210) Ж- 2010-1919 (220) 23.11.2010.
(151) 23.03.2011.
(300) 23.11.2010.
(732) **Abercrombie & Fitch Europe SA**; Via Moree, 6850 Mendrisio, CH
(740) Драгослав Ристић, Владан Малешевић, 11000 Београд, Цара Лазара бр. 7
(540)

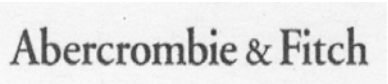

(531) 24.17.25; 27.05.01
(511) Кл. 25: одећа, обућа, покривала за главу.
Кл. 35: оглашавање; вођење послова; пословно управљање; канцеларијски послови; услуге у вези са прометом робе које се односе на одећу, обућу, покривала за главу, сапуне, парфимерију, етерична уља, козметику, лосионе за косу, накит и торбе; услуге у вези са прометом робе, које се пружају директно онлајн, које се односе на одећу, обућу, покривала за главу, сапуне, парфимерију, етерична уља, козметику, лосионе за косу, накит и торбе.

(111) **62481** (181) **10.02.2020.**
(210) Ж- 2010-9183 (220) 10.02.2010.
(151) 23.03.2011.
(300) 10.02.2010.
(732) **A.D. "CENTROPROIZVOD" prehrambena industrija**; Dobanovački put bb, 11271 Surčin-Beograd, RS

(740) "Карановић-Николић" ортачко адвокатско друштво, Ресавска 23, 11000 Београд
(540)

(531) 27.05.01; 27.05.02; 27.05.03; 27.05.10
(511) Кл. 29: конзервирано, сушено и кувано воће; желеи; џемови; компоти; беланчевине за исхрану; емулзификатори од алги за храну; бадем (обрађен); пире од јабуке; уље из костију, јестиво; крем од маслаца; чипс од воћа; сушени кокос; павлака; шлаг; сурутка; јаја у праху; замрзнуто воће, воћни желеи, кора од воћа; конзервисано воће; воће конзервисано у алкохолу; воћна пулпа; воћне салате; грицкалице на бази воћа; грицкалице (од воћа); желатин за јело; желеи за јело; мармелада; пектин за јело; суво грожђе; млеко од соје (замена за млеко); тофу; хербални екстракти за јело; беланце јајета, течна павлака, швапски сир quark.
Кл. 30: какао; шећер; тапиока; колачи; посластице; сладоледи; лед; бисквити, мед; квасац; прашак за пециво; крем од бадема; сирова марципан смеса; декор производи од шећера за украшавање јелки; бесквасни хлеб; двопек; ситно бисквит пециво; бисквит од слада; кекс; обланде; земичке; марципан; производи од шећера; декор производи од шећера; учвршћивач за шлаг; кремасти ледени десерт; палачинке; есенција за храну, осим етеричних есенција и есенцијалних уља; густин; јестиви украси за колаче; природни заслађивачи; хлеб са ђумбиром; медењаци; јестиви скроб; ензими за теста; слатки фондани; ситни колачи; арома за колаче, осим есенцијалних уља; прашак за прављење колача; мешавина за колаче; тесто за колаче; пецива; учвршћивач за сладолед; смеса за прављење сладоледа; згушњивачи за ледене дезерте; лед, природни или вештачки; лед за освежавање; глукоза за јело; грожђани шећер за јело; глутен за јело; млевене житарице за људску исхрану; кисело тесто; квасац; пуслице; хлеб; малтоза; меласа за исхрану; сируп од меласе; мента за слаткише; пецива (фина); петит-беурре кекс са маслацем; ролнице од хлеба; пице; пудинзи; гриз; брашно од тапиоке за исхрану; торте; ванила зачин; ванилин (замена за ванилу); паштете пецива; јестиви лед; сладолед у праху; прашак за прављење сладоледа; слаткиши од бадема; слаткиши од кикирикија; ароме осим есенцијалних уља; ароме за прављење пића, осим есенцијалних уља; кандирани шећер за јело; чипс од житрица; екстракт слада за јело; слад за људску исхрану; крекери; крем пудинг с јајима од ваниле; слаткиши од воћног желеа; слаткиши од желеа; мусли; колачи од пиринча; квасац у таблетама, није за медицинске сврхе; такоси; тортиље; презла; алва; киш; тарт; прашак за пециво; сода бикарбона.

(111) **62482** (181) **10.02.2020.**
(210) Ж- 2010-9181 (220) 10.02.2010.
(151) 23.03.2011.
(300) 10.02.2010.
(732) **A.D. "CENTROPROIZVOD" prehrambena industrija**; Dobanovački put bb, 11271 Surčin-Beograd, RS
(740) "Карановић-Николић" ортачко адвокатско друштво, Ресавска 23, 11000 Београд
(540)

(531) 01.01.02; 01.15.09; 05.03.14; 11.01.02; 25.01.18; 27.05.01; 29.01.14
(591) зелена, наранџаста, жута и бела.
(511) Кл. 29: конзервирано, сушено и кувано воће; желеи; џемови; компоти; беланчевине за исхрану; емулзификатори од алги за храну; бадем (обрађен); пире од јабуке; уље из костију, јестиво; крем од маслаца; чипс од воћа; сушени кокос; павлака; шлаг; сурутка; јаја у праху; замрзнуто воће, воћни желеи, кора од воћа; конзервисано воће; воће конзервисано у алкохолу; воћна пулпа; воћне салате; грицкалице на бази воћа; грицкалице (од воћа); желатин за јело; желеи за јело; мармелада; пектин за јело; суво грожђе; млеко од соје (замена за млеко); тофу; хербални екстракти за јело; беланце јајета, течна павлака, швапски сир quark.
Кл. 30: какао; шећер; тапиока; колачи; посластице; сладоледи; лед; бисквити, мед; квасац; прашак за пециво; крем од бадема; сирова марципан смеса; декор производи од шећера за украшавање јелки; бесквасни хлеб; двопек; ситно бисквит пециво; бисквит од слада; кекс; обланде; земичке; марципан; производи од шећера; декор производи од шећера; учвршћивач за шлаг; кремасти ледени десерт; палачинке; есенција за храну, осим етеричних есенција и есенцијалних уља; густин; јестиви украси за колаче; природни заслађивачи; хлеб са ђумбиром; медењаци; јестиви скроб; ензими за теста; слатки фондани; ситни колачи; арома за колаче, осим есенцијалних уља; прашак за прављење колача; мешавина за колаче; тесто за колаче; пецива; учвршћивач за сладолед; смеса за прављење сладоледа; згушњивачи за ледене дезерте; лед, природни или вештачки; лед за освежавање; глукоза за јело; грожђани шећер за јело; глутен за јело; млевене житарице за људску исхрану; кисело тесто; квасац; пуслице; хлеб; малтоза; меласа за исхрану; сируп од меласе; мента за слаткише; пецива (фина); петит-беурре кекс са маслацем; ролнице од хлеба; пице; пудинзи; гриз; брашно од тапиоке за исхрану; торте; ванила зачин; ванилин (замена за ванилу); паштете пецива; јестиви лед; сладолед у праху; прашак за прављење сладоледа; слаткиши од бадема; слаткиши од кикирикија; ароме осим есенцијалних

уља; ароме за прављење пића, осим есенцијалних уља; кандирани шећер за јело; чипс од житрица; екстракт слада за јело; слад за људску исхрану; крекери; крем пудинг с јајима од ваниле; слаткиши од воћног желеа; слаткиши од желеа; мусли; колачи од пиринча; квасац у таблетама, није за медицинске сврхе; такоси; тортиље; презла; алва; киш; тарт; сода бикарбона.

(111) **62483** (181) **16.02.2020.**
(210) Ж- 2010-9226 (220) 16.02.2010.
(151) 23.03.2011.
(300) 16.02.2010.
(732) **A.D. CENTROPROIZVOD, prehrambena industrija**; Dobanovački put bb, 11271 Surčin, Beograd, RS
(740) "Карановић-Николић" ортачко адвокатско друштво, Ресавска 23, 11000 Београд
(540)

(531) 05.03.14; 27.05.01; 27.05.17; 27.05.21; 29.01.14
(591) зелена, наранџаста, жута и бела.
(511) Кл. 29: конзервирано, сушено и кувано воће; желеи; џемови; компоти; беланчевине за исхрану; емулзификатори од алги за храну; бадем (обрађен); пире од јабуке; уље из костију; јестиво; крем од маслаца; чипс од воћа; сушени кокос; павлака; шлаг; сурутка; јаја у праху; замрзнуто воће, воћни желеи, кора од воћа; конзервисано воће; воће конзервисано у алкохолу; воћна пулпа; воћне салате; грицкалице на бази воћа; грицкалице (од воћа); желатин за јело; желеи за јело; мармелада; пектин за јело; суво грожђе; млеко од соје (замена за млеко); тофу; хербални екстракти за јело; беланце јајета, течна павлака, швапски сир quark.
Кл. 30: какао; шећер; тапиока; колачи; посластице; сладоледи; лед; бисквити, мед; квасац; прашак за пециво; крем од бадема; сирова марципан смеса; декор производи од шећера за украшавање јелки; бесквасни хлеб; двопек; ситно бисквит пециво; бисквит од слада; кекс; обланде; земичке; марципан; производи од шећера; декор производи од шећера; учвршћивач за шлаг; кремасти ледени десерт; палачинке; есенција за храну, осим етеричнихесенција и есенцијалних уља; густин; јестиви украси за колаче; природни заслађивачи; хлеб са ђумбиром; медењаци; јестиви скроб; ензими за теста; слатки фондани; ситни колачи; арома за колаче, осим есенцијалних уља; прашак за прављење колача; мешавина за колаче; тесто за колаче; пецива; учвршћивач за сладолед; смеса за прављење сладоледа; згушњивачи за ледене дезерте; лед, природни или вештачки; лед за освежавање; глукоза за јело; грожђани шећер за јело; глутен за јело; млевене житарице за људску исхрану; кисело тесто; квасац; пуслице; хлеб; малтоза; меласа за исхрану; сируп од меласе; мента за слаткише; пецива (фина); петит-беурре кекс са маслацем; ролнице од хлеба; пице; пудинзи; гриз; брашно од тапиоке за исхрану; торте; ванила зачин; ванилин (замена за ванилу); паштете пецива; јестиви лед; сладолед у праху; прашак за прављење сладоледа; слаткиши од бадема; слаткиши од кикирикија; ароме осим есенцијалних уља; ароме за прављење пића, осим есенцијалних уља; кандирани шећер за јело; чипс од житрица; екстракт слада за јело; слад за људску исхрану; крекери; крем пудинг с јајима од ваниле; слаткиши од воћног желеа; слаткиши од желеа; мусли; колачи од пиринча; квасац у таблетама, није за медицинске сврхе; такоси; тортиље; презла; алва; киш; тарт; сода бикарбона.

(111) **62484** (181) **23.02.2020.**
(210) Ж- 2010-9252 (220) 23.02.2010.
(151) 23.03.2011.
(300) 23.02.2010.
(732) **A.D. "CENTROPROIZVOD" prehrambena industrija**; Dobanovački put bb, 11271 Surčin-Beograd, RS
(740) "Карановић-Николић" ортачко адвокатско друштво, Ресавска 23, 11000 Београд
(540)

(531) 05.03.14; 26.04.06; 26.04.15; 26.04.22; 27.05.01; 27.05.09; 27.05.21; 29.01.15
(591) зелена, наранџаста, жута, бела и црвена.
(511) Кл. 29: конзервирано, сушено и кувано веће, желеи; џемови; компоти; беланчевине за исхрану; емулзификатори од алги за храну; бадем (обрађен); пире од јабуке; уље из костију, јестиво; крем од маслаца; чипс од воћа: сушени кокос; павлака; шлаг; сурутка; јаја у праху; замрзнуто воће, воћни желеи, кора од воћа; конзервисано воће: воће конзервисано у алкохолу; воћна пулпа; воћне салате; грицкалице на бази воћа: грицкалице (од воћа); желатин за јело; желеи за јело; мармелада; пектин за јело; суво грожђе; млеко од соје (замена за млеко); тофу; хербални екстрати за јело; беланце јајета, течна павлака, швапски сир кварк.
Кл. 30: какао; шећер: тапиока; колачи; посластице; сладоледи; лед, бисквити, мед; квасац; прашак за пециво; крем од бадема; сирова марципан смеса; декор производи од шећера за украшавање јелки; бесквасни хлеб; двопек; ситно бисквит пециво; бисквити од слада; кекс; обланде; земичке; марципан; производи од шећера; декор производи од

шећера; учвршћивач за шлаг; кремасти ледени десерт; палачинке; есенција за храну, осим етеричних есенција и есенцијалних уља; густин; јестиви украси за колаче; природни заслађивачи; хлеб са ђумбиром; медењаци; јестиви скроб; ензими за теста; слатки фондани; ситни колачи: арома за колаче, осим есенцијалних уља; ароме осим есенцијалних уља за колаче; прашак за прављење колача; мешавина за колаче; тесто за колаче; пецива; учвршчивач за сладолед; смеса за прављење сладоледа; згушњивачи за ледене дезерте; лед, природни или вештачки; лед за освежавање; глукоза за јело; грожђани шећер за јело; глутен за јело; млевене житарице за људску исхрану; кисело тесто; квасац; пуслице; хлеб; малтоза; меласа за исхрану; сируп од меласе; мента за слаткише; пецива (фина); петит-беурре кекс са маслацем; ролнице од хлеба; пице; пудинзи; гриз; брашно од тапиоке за исхрану; торте; ванила зачин; ванилин (замена за ванилу); паштете пецива; јестиви лед; сладолед у праху; прашак за прављење сладоледа; слаткиши од бадема; слаткиши од кикирикија; ароме осим есенцијалних уља; ароме за прављење пића, осим есенцијалних уља; кандирани шећер за јело; чипс од житарица; екстракт слада за јело; слад за људску исхрану; крекери; крем пудинг са јајима од ваниле; слаткиши од воћног желеа; слаткиши од желеа; мусли; колачи од пиринча; квасац у таблетама, није за медицинске сврхе; такоси; тортиље; презла; алва; киш, тарт; сода бикарбона.

---

(111) **62485** (181) **15.12.2019.**
(210) Ж- 2009-91966 (220) 15.12.2009.
(151) 23.03.2011.
(300) 15.12.2009.
(732) **A.D. "CENTROPROIZVOD" prehrambena industrija**; Dobanovački put bb, 11271 Surčin-Beograd, RS
(740) "Карановић-Николић" ортачко адвокатско друштво, Ресавска 23, 11000 Београд
(540)

KVALITET JE TAJNA DOBROG UKUSA

(511) Кл. 29: конзервирано, сушено и кувано воће, желеи; џемови; компоти; беланчевине за исхрану; емулзификатори од алги за храну; бадем (обрађен); пире од јабуке; уље из костију, јестиво; крем од маслаца; чипс од воћа: сушени кокос; павлака; шлаг; сурутка; јаја у праху; замрзнуто воће, воћни желеи, кора од воћа; конзервисано воће: воће конзервисано у алкохолу; воћна пулпа; воћне салате; грицкалице на бази воћа: грицкалице (од воћа); желатин за јело; желеи за јело; мармелада; пектин за јело; суво грожђе; млеко од соје (замена за млеко); тофу; хербални екстрати за јело; беланце јајета, течна павлака, швапски сир кварк.

Кл. 30: какао; шећер: тапиока; колачи; посластице; сладоледи; лед, бисквити, мед; квасац; прашак за пециво; крем од бадема; сирова марципан смеса; декор производи од шећера за украшавање јелки; бесквасни хлеб; двопек; ситно бисквит пециво; бисквити од слада; кекс; обланде; земичке; марципан; производи од шећера; декор производи од шећера; учвршћивач за шлаг; кремасти ледени десерт; палачинке; есенција за храну, осим етеричних есенција и есенцијалних уља; густин; јестиви украси за колаче; природни заслађивачи; хлеб са ђумбиром; медењаци; јестиви скроб; ензими за теста; слатки фондани; ситни колачи: арома за колаче, осим есенцијалних уља; ароме осим есенцијалних уља за колаче; прашак за прављење колача; мешавина за колаче; тесто за колаче; пецива; учвршчивач за сладолед; смеса за прављење сладоледа; згушњивачи за ледене дезерте; лед, природни или вештачки; лед за освежавање; глукоза за јело; грожђани шећер за јело; глутен за јело; млевене житарице за људску исхрану; кисело тесто; квасац; пуслице; хлеб; малтоза; меласа за исхрану; сируп од меласе; мента за слаткише; пецива (фина); петит-беурре кекс са маслацем; ролнице од хлеба; пице; пудинзи; гриз; брашно од тапиоке за исхрану; торте; ванила зачин; ванилин (замена за ванилу); паштете пецива; јестиви лед; сладолед у праху; прашак за прављење сладоледа; слаткиши од бадема; слаткиши од кикирикија; ароме осим есенцијалних уља; ароме за прављење пића, осим есенцијалних уља; кандирани шећер за јело; чипс од житарица; екстракт слада за јело; слад за људску исхрану; крекери; крем пудинг са јајима (сос од ваниле); слаткиши од воћног желеа; слаткиши од желеа; мусли; колачи од пиринча; квасац у таблетама, није за медицинске сврхе; такоси; тортиље; презла; алва; киш, тарт; сода бикарбона.

---

(111) **62486** (181) **30.09.2020.**
(210) Ж- 2010-1622 (220) 30.09.2010.
(151) 24.03.2011.
(300) 30.09.2010.
(732) **Kumiai Chemical Industry Co., Ltd.**; 4-26, Ikenohata 1-chome, Taito-ku, Tokyo, JP
(740) Драгослав М. Ристић, Владан О. Малешевић, адвокати, Београд, Цара Лазара 7
(540)

VINCARE

(511) Кл. 5: фармацеутски препарати, пестициди, хербициди, инсектициди, фунгициди, гермициди, акарициди, нематициди, митициди.

---

(111) **62487** (181) **01.10.2020.**
(210) Ж- 2010-1635 (220) 01.10.2010.
(151) 25.03.2011.
(300) 01.10.2010.

(732) **BEOROL Preduzeće za spoljnu i unutrašnju trgovinu i usluge doo Beograd**; 11000 Beograd, Kirovljeva 10/26, RS
(740) Адвокати др Миленко Манигодић и Ђуро Манигодић, 11111 Београд, Кумановска 2-б
(540)

(531) 26.11.12; 27.05.01; 29.01.13
(591) црвена, бела и црна
(511) Кл. 6: обични метали и њихове легуре; метални грађевински материјали; металне преносне грађевине; материјали од метала за железничке шине; не-електричне каблове и жице од обичног метала; браварски производи, мали метални гвожђарски производи; цевчице и цеви од метала; сефови; производи од обичних метала који нису укључени у друге класе; руде.
Кл. 7: машине и машински алати; мотори и погонске машине (осим за сувоземна возила); машинске спојнице и трансмисиони елементи (осим за сувоземна возила); пољопривредне справе осим оних којима се ручно управља; инкубатори за јаја.
Кл. 8: ручни алати и справе (којима се ручно управља); прибор за јело; хладно оружје; жилети.
Кл. 9: апарати и инструменти научни, поморски, геодетски, фотографски, кинематографски, оптички, за вагање, мерење, сигнализацију, контролу (инспекцију), спасавање и наставу; апарати и инструменти за провођење, прекид, трансформацију, акумулацију, регулисање или контролу електричне енергије; апарати за снимање, пренос и репродуковање звука или слике; магнетни носиоци података, дискови за снимање; аутоматске машине и механизми за апарате који се покрећу новцем или жетоном; регистар касе, рачунске машине, опрема за обраду података и компјутери; апарати за гашење пожара.
Кл. 11: апарати за осветљавање, грејање, производњу паре, кување, хлађење, сушење, вентилацију, снабдевање водом и за санитарне сврхе.
Кл. 16: хартија, картон и производи од њих, који нису укључени у друге класе; штампане ствари; књиговезачки материјал; фотографије; канцеларијски материјал; лепила за канцеларијске и кућне потребе; уметнички материјали; кичице; писаће машине и канцеларијски реквизити (изузев намештаја); материјали за обуку и наставу (изузев апарата); пластични материјал за паковање (који није укључен у друге класе); штампарска слова; клишеи.
Кл. 19: грађевински материјали (неметални); чврсте неметалне цеви за грађевине; асфалт, црна смола и битумен; неметалне преносне грађевине; споменици, који нису од метала.
Кл. 21: кућне или кухињске справе и посуде чешљеви и сунђери; четке (изузев кичица); материјали за прављење четки; артикли који се користе при чишћењу; челична вуна; непрерађено или полупрерађено стакло (осим стакла које се користи у грађевинарству); стакларија, порцелан, фајанс, грнчарија и лончарија која није укључена у друге класе.
Кл. 22: ужад, канапи, мреже, шатори, надстрешнице од цираде, цираде, једра, вреће (џакови) и торбе (које нису укључене у друге класе); материјали за пуњење мадраца (осим од гуме или пластике); сирове влакнасте текстилне материје .

---

(111) **62488** (181) **01.10.2020.**
(210) Ж- 2010-1636 (220) 01.10.2010.
(151) 25.03.2011.
(300) 01.10.2010.
(732) **LA POINTIQUE INT'L LTD.**; 1030 Industry Drive, Tukwila, WA 98188, US
(740) Дејан П. Богдановић и др., Влајковићева 28, 11000 Београд
(540)

(531) 26.04.02; 26.04.18; 26.11.06; 26.11.08; 26.11.10; 27.05.01; 27.05.24
(511) Кл. 10: хируршки, медицински, зубарски и ветеринарски апарати и инструменти; вештачки удови, очи и зуби; ортопедски прибор; хируршки материјали за зашивање; ваздушни душеци (мадраци) и подлоге за кревет од меморијске пене за медицинске сврхе; ваздушни јастуци и јастуци од меморијске пене за медицинску употребу; штапови за ходање за медицинске сврхе, компресионе чарапе, ортопедски умеци за пету; ортопедски улошци за обућу, ортопедске подлоге за стопала, бандаже за стопала; подметачи за седење за медицинске сврхе; дизалице за инвалиде; лифтови за инвалиде; ортопедска обућа; хемијски активиране топле и хладне терапијске облоге; пумпице са аеросолима за медицинску употребу; улошци за обућу који подупиру свод стопала; бандажи за анатомске зглобове; ћебад за медицинске сврхе; удлаге и ортозе за зглобове и екстремитете за медицинске сврхе; грудњаци, штитници, заштитни делови и стезници за медицинску употребу за глежањ, руку, леђа, грудни кош, лакат, лице, стопало, шаку, главу, колено, ногу, цеваницу, раме, бутину, лумбални појас и чланак руке; компресиони бандажи; еластични завоји; топле облоге за медицинске сврхе; медицинска паковања леда; штитници за уста за медицинску употребу;

неопренски и еластични стезници за медицинску употребу за глежањ, леђа, лакат, стопало, задњу ложу, колено, бутину, цеваницу, лумбални појас и чланак руке; не-медицинске компресе; ортопедски појасеви; ортопедске протезе; ортопедски ђонови, ортопедски потпорни бандажи, ортопедски стезници; ортопедске компресе за медицинске сврхе; компресе за глежањ, руку, леђа, грудни кош, лакат, шаку, главу, цеваницу, раме, бутину, лумбални појас и чланак руке.
Кл. 28: спортска опрема, а нарочито, еластични и неопренски штитници за глежањ, лист, лакат, задњу ложу, колено, цеваницу, бутину, лумбални појас и чланак руке; заштитна опрема за спортисте, а нарочито, штитници за глежањ, руку, стопало, колено и лакат, ногу, цеваницу, бутину, лумбални појас и зглоб руке; атлетске траке (еластични завоји за спортску употребу).

(111) **62489** (181) **16.08.2020.**
(210) Ж- 2010-1416 (220) 16.08.2010.
(151) 25.03.2011.
(300) 008883746 15.02.2010. EM
(732) **Eltel Group Oy**; Komentajankatu 5, 02610 Espoo, FI
(740) Гордана Павловић, адвокат; Миливоје Павловић, адвокат, Мајке Јевросиме 53, 11000 Београд
(540)

ELTEL SMART

(511) Кл. 9: апарати и инструменти научни, поморски, геодетски, фотографски, кинематографски, оптички, за вагање, мерење, сигнализацију, контролу (инспекцију), помоћ (спасавање) и наставу; апарати и инструменти за провођење, прекидање, трансформисање, акумулирање, регулисање или контролу електричне енергије, апарати за снимање, пренос или репродуковање звука или слике; магнетски носиоци података, дискови за снимање; аутоматске продајне машине и механизми за апарате који се покрећу новцем или жетоном; регистар-касе, рачунске машине, опрема за обраду података и компјутери; апарати за гашење пожара.
Кл. 37: изградња; оправљање; инсталационе услуге.
Кл. 38: телекомуникације.
Кл. 42: научне и технолошке услуге и истраживање и пројектовање у вези наведених услуга; услуге индустријске анализе и истраживања; пројектовање и развој компјутерског хардвера и софтвера.

(111) **62490** (181) **01.10.2020.**
(210) Ж- 2010-1627 (220) 01.10.2010.
(151) 25.03.2011.
(300) 01.10.2010.
(732) **UNILEVER N.V.**; Weena 455, 3013 AL Rotterdam, NL
(740) Срђа Поповић, Гордана Поповић, Борис Поповић, Лидија Томасовић, Катарина Костић, Таковска 19, Београд
(540)

BACTI-STOP

(511) Кл. 3: препарати за бељење, полирање, рибање и нагризање; препарати за одржавање домаћинства; корпице и улошци за WC шоље.

(111) **62491** (181) **24.08.2020.**
(210) Ж- 2010-1456 (220) 24.08.2010.
(151) 25.03.2011.
(300) 24.08.2010.
(732) **ZU Apoteka ZEN**; Bulevar Despota Stefana 61, 11000 Beograd, RS
(540)

ZEN Nutrition

(511) Кл. 5: фармацеутски и ветеринарски препарти; санитарни препарати за медицинску употребу; дијететске супстанце прилагођене за употребу у медицини, храна за бебе; фластери, материјали за завијање; материјали за пломбирање зуба, зубарска смола; дезинфекциона средства; препарати за уништавање штеточина; фунгициди, хербициди.

(111) **62492** (181) **19.08.2020.**
(210) Ж- 2010-1430 (220) 19.08.2010.
(151) 25.03.2011.
(300) 19.08.2010.
(732) **Pantelić d.o.o.**; Ratina bb, Kraljevo, RS
(540)

(531) 05.03.15; 05.07.13; 25.05.02; 27.05.01; 27.05.04; 27.05.07; 27.05.13; 29.01.15
(591) црна, црвена, зелена, жута, плаво-сива
(511) Кл. 31: пољопривредни, вртларски и шумарски производи и зрневље који нису укључени у друге класе; храна за животиње.

(111) **62493** (181) **11.08.2020.**
(210) Ж- 2010-1392 (220) 11.08.2010.
(151) 25.03.2011.
(300) 11.08.2010.
(732) **"SK ALATI Company" d.o.o.**; 24000 Subotica, Vuka Mandušića 15, RS

(740) Димитријевић Ж. Слободан, дипл.инжењер, 11000 Београд, Огњена Прице 54
(540)

ZECCA

(511) Кл. 6: обични метали и њихове легуре; метални грађевински материјали; металне преносне грађевине; материјали од метала за железничке шине; не-електричне каблове и жице од обичног метала; браварски производи, мали метални гвожђарски производи; цевчице и цеви од метала; сефови; производи од обичних метала који нису укључени у друге класе; руде.
Кл. 7: машине и машински алати; мотори и погонске машине (осим за сувоземна возила); машинске спојнице и трансмисиони елементи (осим за сувоземна возила); пољопривредне справе осим оних којима се ручно управља; инкубатори за јаја.
Кл. 8: ручни алати и справе (којима се ручно управља); прибор за јело; хладно оружје; жилети.

(111) **62494** (181) **19.08.2020.**
(210) Ж- 2010-1431 (220) 19.08.2010.
(151) 25.03.2011.
(300) 154545 25.06.2010. GR
(732) **FIL Limited A Bermuda Company**; Pembroke Hall, 42 Crow Lane, Pembroke HM 19, P.O. Box HM 670, Hamilton HMCX, Bermuda, BM
(740) Гордана Павловић, адвокат; Миливоје Павловић, адвокат, Мајке Јевросиме 53, 11000 Београд
(540)

Fidelity
INVESTMENT MANAGERS

(531) 01.05.01; 01.05.02; 26.15.01; 27.05.01; 27.05.10
(511) Кл. 36: финансијске услуге; услуге осигурања; услуге у области инвестиција; услуге у вези са међународним и домаћим инвестицијама; услуге дискреционог управљања инвестицијама; саветодавне услуге у вези са инвестицијама; заједнички фондови и услуге у вези са њима; пензиони фондови и услуге у вези са њима; брокерске услуге у области хартија од вредности и услуге у вези са њима; банкарски послови и услуге у вези са њима; трустови и услуге у вези с њима; услуге вођења портфолиа, заједничких фондова, пензионих фондова и трустова; финансијско управљање и планирање; финансијско саветовање; кредитне услуге; банкарске услуге у вези са инвестицијама; услуге у области пословних финансија и капитала за пословне пројекте; услуге у вези са приватним инвестицијама (private equity); услуге у вези са некретнинама; услуге вези са инвестирањем у некретнине; услуге давања гаранција за хартије од вредности; услуге везане за тржиште стране валуте и финансијских деривата; пружање информација, давање савета и консалтинг у вези са хартијама од вредности, финансијама и инвестицијама; услуге пружања информација из интерактивне базе података у вези са хартијама од вредности, финансијама и инвестицијама; услуге у вези са кредитним и дебитним картицама; услуге новчаних плаћања; давање кредита уз гаранције или без гаранција; мењачки послови; пружање информација, давање савета и консалтинг у вези са свим наведеним услугама.

(111) **62495** (181) **19.08.2020.**
(210) Ж- 2010-1432 (220) 19.08.2010.
(151) 25.03.2011.
(300) 19.08.2010.154547 25.06.2010. GR
(732) **FIL Limited A Bermuda Company**; Pembroke Hall, 42 Crow Lane, Pembroke HM 19, P.O. Box HM 670, Hamilton HMCX, BM
(740) Гордана Павловић, адвокат; Миливоје Павловић, адвокат, Мајке Јевросиме 53, 11000 Београд
(540)

(531) 01.05.01; 01.05.02; 26.15.01
(511) Кл. 36: финансијске услуге; услуге осигурања; услуге у области инвестиција; услуге у вези са међународним и домаћим инвестицијама; услуге дискреционог управљања инвестицијама; саветодавне услуге у вези са инвестицијама; заједнички фондови и услуге у вези са њима; пензиони фондови и услуге у вези са њима; брокерске услуге у области хартија од вредности и услуге у вези са њима; банкарски послови и услуге у вези са њима; трустови и услуге у вези с њима; услуге вођења портфолиа, заједничких фондова, пензионих фондова и трустова; финансијско управљање и планирање; финансијско саветовање; кредитне услуге; банкарске услуге у вези са инвестицијама; услуге у области пословних финансија и капитала за пословне пројекте; услуге у вези са приватним инвестицијама (private equity); услуге у вези са некретнинама; услуге вези са инвестирањем у некретнине; услуге давања гаранција за хартије од вредности; услуге везане за тржиште стране валуте и финансијских деривата; пружање информација, давање савета и консалтинг у вези са хартијама од вредности, финансијама и инвестицијама; услуге пружања информација из

интерактивне базе података у вези са хартијама од вредности, финансијама и инвестицијама; услуге у вези са кредитним и дебитним картицама; услуге новчаних плаћања; давање кредита уз гаранције или без гаранција; мењачки послови; пружање информација, давање савета и консалтинг у вези са свим наведеним услугама.

(111) **62496** (181) **25.06.2020.**
(210) Ж- 2010-1121 (220) 25.06.2010.
(151) 25.03.2011.
(300) 25.06.2010.
(732) **BRITISH AMERICAN TOBACCO (Brands) Inc.**; 2711 Centerville Road, Suite 300, Wilmington, Delaware 19808, US
(740) Живко Мијатовић & Партнерс, д.о.о., 11000 Београд, Таковска 58/14
(540)

PALL MALL CRYSTAL

(511) Кл. 34: цигарете; дуван; производи од дувана; упаљачи; шибице; артикли за пушаче.

(111) **62497** (181) **04.02.2021.**
(210) Ж- 2011-134 (220) 04.02.2011.
(151) 25.03.2011.
(300) 04.02.2011.
(732) **Galenika a.d.**; Batajnički drum bb, Beograd 11080 Zemun, RS
(540)

GALOSART PLUS
ГАЛОСАРТ ПЛУС

(511) Кл. 5: фармацеутски препарати.

(111) **62498** (181) **04.02.2021.**
(210) Ж- 2011-133 (220) 04.02.2011.
(151) 25.03.2011.
(300) 04.02.2011.
(732) **Galenika a.d.**; Batajnički drum bb, Beograd, 11080 Zemun, RS
(540)

FOSINOP ФОСИНОП

(511) Кл. 5: фармацеутски препарати.

(111) **62499** (181) **04.02.2021.**
(210) Ж- 2011-135 (220) 04.02.2011.
(151) 25.03.2011.
(300) 04.02.2011.
(732) **Galenika a.d.**; Batajnički drum bb, Beograd, 11080 Zemun, RS
(540)

NEBIGAL НЕБИГАЛ

(511) Кл. 5: фармацеутски препарати.

(111) **62500** (181) **04.02.2021.**
(210) Ж- 2011-136 (220) 04.02.2011.
(151) 25.03.2011.
(300) 04.02.2011.
(732) **Galenika a.d.**; Batajnički drum bb, Beograd, 11080 Zemun, RS
(540)

TELARTAN ТЕЛАРТАН

(511) Кл. 5: фармацеутски препарати.

ИНДЕКСНЕ ТАБЕЛЕ ЗА ЖИГОВЕ

INDEX TABLES FOR TRADEMARKS

- **ИНДЕКС НОСИЛАЦА ЖИГОВА (стр. 2155)**
- INDEX OF THE HOLDER OF THE REGISTRATION (p. 2155)
- **ИНДЕКС БРОЈЕВА ЖИГОВА (стр. 2160)**
- INDEX OF THE TRADEMARK NUMBERS (p. 2160)
- **ИНДЕКС ПО КЛАСАМА НИЧАНСКЕ КЛАСИФИКАЦИЈЕ РОБА И УСЛУГА (стр. 2162)**
- INDEX ACCORDING TO THE NICE CLASSIFICATION OF GOODS AND SERVICES (p. 2162)

ИНДЕКС НОСИЛАЦА ЖИГОВА

INDEX OF THE HOLDER OF THE REGISTRATION

(732)	(111)	(210)
A.D. "CENTROPROIZVOD" prehrambena industrija	62481	Ж- 2010-9183
A.D. "CENTROPROIZVOD" prehrambena industrija	62482	Ж- 2010-9181
A.D. "CENTROPROIZVOD" prehrambena industrija	62484	Ж- 2010-9252
A.D. "CENTROPROIZVOD" prehrambena industrija	62485	Ж- 2009-91966
A.D. "CENTROPROIZVOD", prehrambena industrija	62416	Ж- 2005-91013
A.D. "CENTROPROIZVOD", prehrambena industrija	62469	Ж- 2005-91050
A.D. "CENTROPROIZVOD", prehrambena industrija	62470	Ж- 2005-91012
A.D. CENTROPROIZVOD, prehrambena industrija	62446	Ж- 1994-9878
A.D. CENTROPROIZVOD, prehrambena industrija	62471	Ж- 2009-9713
A.D. CENTROPROIZVOD, prehrambena industrija	62483	Ж- 2010-9226
Abercrombie & Fitch Europe SA	62480	Ж- 2010-1919
Acorda Therapeutics, Inc. (Delaware corporation)	62311	Ж- 2010-1201
AD "IMLEK"	62468	Ж- 2010-1052
AD "JAKA-80" Radovi š	62389	Ж- 2009-910
Akciju sabiedriba"OLAINFARM"	62401	Ж- 2010-986
AKCIONARSKO DRUŠTVO FABRIKA PUMPI "JASTREBAC"	62330	Ж- 2010-1328
Akcionarsko društvo za poljoprivrednu proizvodnju "Mitrosrem"	62402	Ж- 2010-1226
Akcionarsko društvo za poljoprivrednu proizvodnju "Mitrosrem"	62403	Ж- 2010-1227
Akcionarsko društvo za poljoprivrednu proizvodnju "Mitrosrem"	62404	Ж- 2010-1228

(732)	(111)	(210)
Akcionarsko društvo za poljoprivrednu proizvodnju "Mitrosrem"	62405	Ж- 2010-1231
Akcionarsko društvo za preardu i promet žitarica i proizvodnju testenina *DANUBIUS*	62334	Ж- 2010-731
Akcionersko društvo za proizvodstvo i promet na vino "VINARSKA VIZBA-TIKVEŠ" eksport import AD Skopje	62459	Ж- 2009-46
ALDO GROUP INTERNATIONAL AG	62359	Ж- 2010-1363
AMAN d.o.o. Privredno društvo za spoljnu i unutrašnju trgovinu	62308	Ж- 2010-715
Amgen Inc. (Delaware corporation)	62419	Ж- 2010-1401
ANLIT LTD.	62318	Ж- 2010-1056
ARCOR S.A.I.C.	62344	Ж- 2010-1448
ArhivCentar d.o.o., Beograd	62363	Ж- 2010-1779
BARBERTON - CONSULTORES E SERVIÇOS LDA.	62394	Ж- 2010-1391
Bečejska pekara AD	62472	Ж- 2010-1094
BEOGRADSKA KULTURNA MREŽA d.o.o.	62316	Ж- 2010-861
BEOROL Preduzeće za spoljnu i unutrašnju trgovinu i usluge doo Beograd	62487	Ж- 2010-1635
BERLIN-CHEMIE AG	62462	Ж- 2010-1897
Bristol-Myers Squibb Company a Delaware Corporation	62410	Ж- 2010-1765
BRITISH AMERICAN TOBACCO (Brands) Inc.	62383	Ж- 2010-1426
BRITISH AMERICAN TOBACCO (Brands) Inc.	62496	Ж- 2010-1121

(732)	(111)	(210)
Cheil Industries Inc. (a Korean corporation)	62367	Ж- 2010-1476
Cheminova A/S	62360	Ж- 2010-1829
Chongqing Senci Import and Export Trading Co. Ltd.	62366	Ж- 2010-1720
CINKARNA, Metalurško-kemična industrija Celje, d.d.	62406	Ж- 2010-1691
COLGATE-PALMOLIVE COMPANY	62335	Ж- 2010-427
COMMUNIS D.O.O.	62365	Ж- 2010-1775
Danilo Golijanin	62358	Ж- 2010-1308
Deckers Outdoor Corporation	62309	Ж- 2010-1716
Deckers Outdoor Corporation	62310	Ж- 2010-1717
DECO CAKE d.o.o.	62378	Ж- 2009-1380
DELTA AGRAR DOO BEOGRAD	62350	Ж- 2010-1333
Delta Maxi d.o.o.	62421	Ж- 2010-2002
DEUTSCHE TELEKOM AG	62353	Ж- 2006-891
Diva World Pty Limited	62465	Ж- 2010-1908
Diva World Pty Limited	62466	Ж- 2010-1909
DJORDANS OOD	62458	Ж- 2008-1197
Dom zdravlja JEDRO	62364	Ж- 2010-1762
DOO Pavle komerc PSV	62305	Ж- 2010-1711
Društvo za proizvodnju i trgovinu VUMO DOO Beograd	62315	Ж- 2010-1293
Društvo za proizvodnju i trgovinu VUMO DOO Beograd	62326	Ж- 2010-1434
Društvo za proizvodnju osvežavajućih napitaka, plastične ambalaže i mineralne vode HEBA AD Bujanovac	62376	Ж- 2010-381
Društvo za proizvodnju, inženjering i usluge "BUCK" d.o.o.	62312	Ж- 2010-492
Ecoagri Serbia akcionarsko društvo za poljoprivrednu proizvodnju Bela Crkva	62476	Ж- 2010-1914
EDENRED	62324	Ж- 2010-1654
ELI LILLY AND COMPANY	62373	Ж- 2010-1487

(732)	(111)	(210)
Eltel Group Oy	62489	Ж- 2010-1416
EUROBANK EFG A.D.	62314	Ж- 2010-1194
Fabrika kotrljajućih ležajeva i kardana FKL a.d. Temerin	62392	Ж- 2010-1454
FIL Limited A Bermuda Company	62494	Ж- 2010-1431
FIL Limited A Bermuda Company	62495	Ж- 2010-1432
FINLANDIA VODKA WORLDWIDE Ltd. a Finland corporation	62455	Ж- 2010-1760
Fox International Channels (US), Inc.	62428	Ж- 2010-1479
FUDBALSKI KLUB "SPARTAK ZLATIBOR VODA"	62301	Ж- 2010-1304
Galenika a.d.	62497	Ж- 2011-134
Galenika a.d.	62498	Ж- 2011-133
Galenika a.d.	62499	Ж- 2011-135
Galenika a.d.	62500	Ж- 2011-136
GAT Microencapsulation	62441	Ж- 2010-1910
GAT Microencapsulation	62442	Ж- 2010-1911
GAT Microencapsulation	62443	Ж- 2010-1912
GAT Microencapsulation	62444	Ж- 2010-1913
GENERAL MOTORS LLC, kompanija sa ograničenom odgovornošću organizovana po propisima države Delaware	62387	Ж- 2010-1202
HUA XING d.o.o.	62475	Ж- 2010-1728
HYUNDAI MOTOR COMPANY	62381	Ж- 2010-1441
HYUNDAI MOTOR COMPANY	62382	Ж- 2010-1440
Industrija vode AQUA COM doo	62439	Ж- 2011-64
Industrija vode AQUA COM doo	62467	Ж- 2011-242
IVANČIĆ I SINOVI	62351	Ж- 2010-1659
Japan Tobacco Inc .	62361	Ж- 2010-1814
Karbon d.o.o.	62337	Ж- 2010-1507
Karbon d.o.o.	62338	Ж- 2010-1501

(732)	(111)	(210)
Karbon d.o.o.	62431	Ж- 2010-1497
Karbon d.o.o.	62339	Ж- 2010-1506
Karbon d.o.o.	62340	Ж- 2010-1496
Karbon d.o.o.	62341	Ж- 2010-1503
Karbon d.o.o.	62342	Ж- 2010-1504
Karbon d.o.o.	62343	Ж- 2010-1509
Karbon d.o.o.	62432	Ж- 2010-1505
Knežević Goran	62433	Ж- 2010-1623
Koncern za proizvodnju i promet konditorskih proizvoda "BAMBI - BANAT" AD	62437	Ж- 2010-203
Kraft Foods Global Brands LLC, a state of Delaware Limited Liability Company	62331	Ж- 2010-835
Kumiai Chemical Industry Co., Ltd.	62486	Ж- 2010-1622
LA POINTIQUE INT'L LTD .	62488	Ж- 2010-1636
Land Rover	62328	Ж- 2010-1207
MARBO PRODUCT d.o.o .	62447	Ж- 2010-627
MARBO PRODUCT d.o.o.	62448	Ж- 2010-628
MARBO PRODUCT d.o.o.	62449	Ж- 2010-629
Marchon Eyewear, Inc. (New York Corporation)	62370	Ж- 2010-1404
Marija Dželajlija Džodžo	62371	Ж- 2010-1699
MARS, INCORPORATED	62384	Ж- 2008-2975
McDonald`s International Property Company, Limited	62463	Ж- 2010-1322
MEDICO UNO preduzeće za trgovinu d.o.o.	62429	Ж- 2010-1080
Merck Sharp & Dohme Corp. a New Jersey corporation	62307	Ж- 2010-1489
METALAC a.d.	62415	Ж- 2010-1761
MGUM TECHNOLOGY d.o.o.	62422	Ж- 2010-1645
MILICA GURUNG	62474	Ж- 2010-1327
Mina Jevtić	62369	Ж- 2010-1414
Miomir Korać	62302	Ж- 2010-1192

(732)	(111)	(210)
Miomir Korać	62303	Ж- 2010-1191
Miomir Korać	62304	Ж- 2010-1190
MONUS preduzeće za proizvodnju, spoljnu i unutrašnju trgovinu i usluge doo Beograd	62325	Ж- 2010-1695
MT TRADE d.o.o.	62379	Ж- 2010-1129
Nine West Development Corporation	62329	Ж- 2010-1386
Nine West Development Corporation	62390	Ж- 2010-1387
Nine West Development Corporation	62391	Ж- 2010-1389
ORION TELEKOM doo Beograd	62345	Ж- 2010-882
Pantelić d.o.o.	62492	Ж- 2010-1430
PATENT CO. PREDUZEĆE ZA PROIZVODNJU, USLUGE I PROMET DOO	62375	Ж- 2010-1109
Pavlović Boban	62356	Ж- 2010-1110
PharmaSwiss d.o.o.	62397	Ж- 2011-103
PharmaSwiss d.o.o.	62413	Ж- 2010-1812
PharmaSwiss d.o.o.	62414	Ж- 2010-1813
PharmaSwiss d.o.o.	62418	Ж- 2010-1744
PREDUZEĆE ZA MENADŽMENT I KONSTALTING B92 TRUST DOO	62436	Ж- 2010-1424
PREDUZEĆE ZA PROIZVODNJU I EMITOVANJE TV PROGRAMA FOX TELEVIZIJA D.O.O.	62395	Ж- 2010-1521
PREDUZEĆE ZA PROIZVODNJU I EMITOVANJE TV PROGRAMA FOX TELEVIZIJA D.O.O.	62396	Ж- 2010-1522
PREDUZEĆE ZA PROIZVODNJU I EMITOVANJE TV PROGRAMA FOX TELEVIZIJA DOO BEOGRAD	62434	Ж- 2010-1826

(732)	(111)	(210)
PREDUZEĆE ZA PROIZVODNJU I EMITOVANJE TV PROGRAMA FOX TELEVIZIJA DOO BEOGRAD	62435	Ж- 2010-1827
Preduzeće za proizvodnju i trgovinu "FRUVITA", d.o.o.	62473	Ж- 2009-1964
Preduzeće za proizvodnju i trgovinu FRUVITA d.o.o.	62399	Ж- 2010-1330
Preduzeće za proizvodnju, promet i usluge "ERGA CO". D.O.O.	62464	Ж- 2010-1906
PROIZVODNO TRGOVINSKA RADNJA BG PRODUKT, Boban Gašić	62319	Ж- 2010-1613
PROIZVODNO TRGOVINSKA RADNJA BG PRODUKT, Boban Gašić	62320	Ж- 2010-1614
PROTON SYSTEM d.o.o.	62306	Ж- 2010-1808
Radojević Dejan	62438	Ж- 2010-496
Red Chip Company Ltd., a British Virgin Islands Corporation	62417	Ж- 2010-1435
Rotam Agrochem International Company Ltd	62477	Ж- 2010-1916
Rotam Agrochem International Company Ltd	62478	Ж- 2010-1917
Rotam Agrochem International Company Ltd	62479	Ж- 2010-1918
Russell Brands LLC	62425	Ж- 2010-1491
Russell Brands LLC	62426	Ж- 2010-1490
S.C. Johnson & Son, Inc.	62452	Ж- 2010-1529
S.C. Johnson & Son, Inc.	62453	Ж- 2010-1530
Samostalna zanatska kamenorezačka radnja ARANĐELOVAC GRANIT, PR Radoslav Vulićević	62374	Ж- 2010-1116
Samsung Electronics Co., Ltd	62372	Ж- 2010-1488
Shyang Yun Tools Co., Ltd.	62386	Ж- 2010-1382
SK ALATI Company d.o.o.	62493	Ж- 2010-1392
SLIDER, D.O.O.	62336	Ж- 2010-1539

(732)	(111)	(210)
SOCIETE DES PRODUITS NESTLE S.A.	62368	Ж- 2010-1419
Specialty Fertilizer Products, LLC	62377	Ж- 2010-168
Strauss Adriatic d.o.o.	62347	Ж- 2010-1586
Strauss Adriatic d.o.o.	62348	Ж- 2010-1618
Strauss Adriatic d.o.o.	62349	Ж- 2010-1619
Strauss Adriatic d.o.o.	62440	Ж- 2010-1256
Strauss Adriatic d.o.o.	62457	Ж- 2010-1585
Strauss Adriatic d.o.o.	62460	Ж- 2010-403
SUMITOMO RUBBER INDUSTRIES, LTD.	62388	Ж- 2010-1217
SWISS HEALTH d.o.o.	62398	Ж- 2010-810
SZR "Zlatna dolina"	62357	Ж- 2009-1953
SZR MANUAL Radionica za izradu predmeta od kože i trgovinu, vlasnik Siniša Žarin	62333	Ж- 2010-684
Tarak Manufacturing Co. Ltd.	62423	Ж- 2010-1700
Technoland, d.o.o.	62313	Ж- 2010-569
Technoland, d.o.o.	62327	Ж- 2010-570
TEHMAR PROMET d.o.o.	62409	Ж- 2010-1721
Telenor d.o.o.	62408	Ж- 2010-1709
TiM PEKARA	62450	Ж- 2010-1383
TiM PEKARA d.o.o.	62451	Ж- 2010-1544
TiM PEKARA d.o.o.	62424	Ж- 2010-1384
TISACOOP d.o.o. EXPORT-IMPORT	62430	Ж- 2010-412
TOYOTA JIDOSHA KABUSHIKI KAISHA (also trading as TOYOTA MOTOR CORPORATION)	62380	Ж- 2010-1455
Toyota Jidosha Kabushiki Kaisha (also trading as Toyota Motor Corporation)	62385	Ж- 2010-1124
TRADUS ALLEGRO AG	62411	Ж- 2010-1778
TRESET DOO ZA PROIZVODNJU, PROMET I USLUGE	62321	Ж- 2010-1550

(732)	(111)	(210)
TRESET DOO ZA PROIZVODNJU, PROMET I USLUGE	62322	Ж- 2010-1548
TRESET DOO ZA PROIZVODNJU, PROMET I USLUGE	62323	Ж- 2010-1549
Trgovinsko preduzeće "B.G. PHARM" d.o.o.	62445	Ж- 2010-1261
Udruženje "Joga u svakodnevnom životu"	62317	Ж- 2010-1172
UNILEVER N.V.	62490	Ж- 2010-1627
United Balkan Trade d.o.o.	62400	Ж- 2010-1331
UNITED PHOSPHORUS LIMITED	62427	Ж- 2010-1587
Universal Protein Supplements Corporation d/b/a Universal Nutrition	62352	Ж- 2009-782
Universal Protein Supplements Corporation d/b/a Universal Nutrition	62355	Ж- 2009-781

(732)	(111)	(210)
Universal Protein Supplements Corporation d/b/a Universal Nutrition	62454	Ж- 2009-783
VATERPOLO KLUB PARTIZAN RAIFFEISEN	62456	Ж- 2010-1173
Viacom International Inc.	62420	Ж- 2010-1213
ViiV Healthcare Company, Corporation Service Company	62346	Ж- 2011-126
VLADIMIR MIRKOV; ENES HUBIJAR and VLADIMIR BARBIĆ	62362	Ж- 2010-1795
VLADIMIR MIRKOV; ENES HUBIJAR and VLADIMIR BARBIĆ	62412	Ж- 2010-1806
WEDDING HOUSE d.o.o.	62461	Ж- 2010-437
ZOVI ME D.O.O.	62407	Ж- 2010-1675
ZU Apoteka ZEN	62393	Ж- 2010-1457
ZU Apoteka ZEN	62491	Ж- 2010-1456
AD "IMLEK"	62332	Ж- 2010-1055

ИНДЕКС БРОЈЕВА ЖИГОВА

INDEX OF THE TRADEMARK NUMBERS

(210)	(111)
Ж- 1994-9878	62446
Ж- 2005-91012	62470
Ж- 2005-91013	62416
Ж- 2005-91050	62469
Ж- 2006-891	62353
Ж- 2008-1197	62458
Ж- 2008-2975	62384
Ж- 2009-46	62459
Ж- 2009-781	62355
Ж- 2009-782	62352
Ж- 2009-783	62454
Ж- 2009-910	62389
Ж- 2009-1380	62378
Ж- 2009-1953	62357
Ж- 2009-1964	62473
Ж- 2009-9713	62471
Ж- 2009-91966	62485
Ж- 2010-168	62377
Ж- 2010-203	62437
Ж- 2010-381	62376
Ж- 2010-403	62460
Ж- 2010-412	62430
Ж- 2010-427	62335
Ж- 2010-437	62461
Ж- 2010-492	62312
Ж- 2010-496	62438
Ж- 2010-569	62313

(210)	(111)
Ж- 2010-570	62327
Ж- 2010-627	62447
Ж- 2010-628	62448
Ж- 2010-629	62449
Ж- 2010-684	62333
Ж- 2010-715	62308
Ж- 2010-731	62334
Ж- 2010-810	62398
Ж- 2010-835	62331
Ж- 2010-861	62316
Ж- 2010-882	62345
Ж- 2010-986	62401
Ж- 2010-1052	62468
Ж- 2010-1055	62332
Ж- 2010-1056	62318
Ж- 2010-1080	62429
Ж- 2010-1094	62472
Ж- 2010-1109	62375
Ж- 2010-1110	62356
Ж- 2010-1116	62374
Ж- 2010-1121	62496
Ж- 2010-1124	62385
Ж- 2010-1129	62379
Ж- 2010-1172	62317
Ж- 2010-1173	62456
Ж- 2010-1190	62304
Ж- 2010-1191	62303
Ж- 2010-1192	62302

(210)	(111)
Ж- 2010-1194	62314
Ж- 2010-1201	62311
Ж- 2010-1202	62387
Ж- 2010-1207	62328
Ж- 2010-1213	62420
Ж- 2010-1217	62388
Ж- 2010-1226	62402
Ж- 2010-1227	62403
Ж- 2010-1228	62404
Ж- 2010-1231	62405
Ж- 2010-1256	62440
Ж- 2010-1261	62445
Ж- 2010-1293	62315
Ж- 2010-1304	62301
Ж- 2010-1308	62358
Ж- 2010-1322	62463
Ж- 2010-1327	62474
Ж- 2010-1328	62330
Ж- 2010-1330	62399
Ж- 2010-1331	62400
Ж- 2010-1333	62350
Ж- 2010-1363	62359
Ж- 2010-1382	62386
Ж- 2010-1383	62450
Ж- 2010-1384	62424
Ж- 2010-1386	62329
Ж- 2010-1387	62390
Ж- 2010-1389	62391

(210)	(111)
Ж- 2010-1391	62394
Ж- 2010-1392	62493
Ж- 2010-1401	62419
Ж- 2010-1404	62370
Ж- 2010-1414	62369
Ж- 2010-1416	62489
Ж- 2010-1419	62368
Ж- 2010-1424	62436
Ж- 2010-1426	62383
Ж- 2010-1430	62492
Ж- 2010-1431	62494
Ж- 2010-1432	62495
Ж- 2010-1434	62326
Ж- 2010-1435	62417
Ж- 2010-1440	62382
Ж- 2010-1441	62381
Ж- 2010-1448	62344
Ж- 2010-1454	62392
Ж- 2010-1455	62380
Ж- 2010-1456	62491
Ж- 2010-1457	62393
Ж- 2010-1476	62367
Ж- 2010-1479	62428
Ж- 2010-1487	62373
Ж- 2010-1488	62372
Ж- 2010-1489	62307
Ж- 2010-1490	62426
Ж- 2010-1491	62425

(210)	(111)
Ж- 2010-1496	62340
Ж- 2010-1497	62431
Ж- 2010-1501	62338
Ж- 2010-1503	62341
Ж- 2010-1504	62342
Ж- 2010-1505	62432
Ж- 2010-1506	62339
Ж- 2010-1507	62337
Ж- 2010-1509	62343
Ж- 2010-1521	62395
Ж- 2010-1522	62396
Ж- 2010-1529	62452
Ж- 2010-1530	62453
Ж- 2010-1539	62336
Ж- 2010-1544	62451
Ж- 2010-1548	62322
Ж- 2010-1549	62323
Ж- 2010-1550	62321
Ж- 2010-1585	62457
Ж- 2010-1586	62347
Ж- 2010-1587	62427
Ж- 2010-1613	62319

(210)	(111)
Ж- 2010-1614	62320
Ж- 2010-1618	62348
Ж- 2010-1619	62349
Ж- 2010-1622	62486
Ж- 2010-1623	62433
Ж- 2010-1627	62490
Ж- 2010-1635	62487
Ж- 2010-1636	62488
Ж- 2010-1645	62422
Ж- 2010-1654	62324
Ж- 2010-1659	62351
Ж- 2010-1675	62407
Ж- 2010-1691	62406
Ж- 2010-1695	62325
Ж- 2010-1699	62371
Ж- 2010-1700	62423
Ж- 2010-1709	62408
Ж- 2010-1711	62305
Ж- 2010-1716	62309
Ж- 2010-1717	62310
Ж- 2010-1720	62366
Ж- 2010-1721	62409

(210)	(111)
Ж- 2010-1728	62475
Ж- 2010-1744	62418
Ж- 2010-1760	62455
Ж- 2010-1761	62415
Ж- 2010-1762	62364
Ж- 2010-1765	62410
Ж- 2010-1775	62365
Ж- 2010-1778	62411
Ж- 2010-1779	62363
Ж- 2010-1795	62362
Ж- 2010-1806	62412
Ж- 2010-1808	62306
Ж- 2010-1812	62413
Ж- 2010-1813	62414
Ж- 2010-1814	62361
Ж- 2010-1826	62434
Ж- 2010-1827	62435
Ж- 2010-1829	62360
Ж- 2010-1897	62462
Ж- 2010-1906	62464
Ж- 2010-1908	62465
Ж- 2010-1909	62466

(210)	(111)
Ж- 2010-1910	62441
Ж- 2010-1911	62442
Ж- 2010-1912	62443
Ж- 2010-1913	62444
Ж- 2010-1914	62476
Ж- 2010-1916	62477
Ж- 2010-1917	62478
Ж- 2010-1918	62479
Ж- 2010-1919	62480
Ж- 2010-2002	62421
Ж- 2010-9181	62482
Ж- 2010-9183	62481
Ж- 2010-9226	62483
Ж- 2010-9252	62484
Ж- 2011-64	62439
Ж- 2011-103	62397
Ж- 2011-126	62346
Ж- 2011-133	62498
Ж- 2011-134	62497
Ж- 2011-135	62499
Ж- 2011-136	62500
Ж- 2011-242	62467

ИНДЕКС ПО КЛАСАМА НИЧАНСКЕ КЛАСИФИКАЦИЈЕ РОБА И УСЛУГА

INDEX ACCORDING TO THE NICE CLASSIFICATION OF GOODS AND SERVICES

Класа: 1

62321
62322
62323
62337
62338
62339
62340
62341
62342
62343
62377
62406
62431
62432
62476

Класа: 2

62337
62338
62339
62340
62341
62342
62343
62406
62431
62432

Класа: 3

62306
62308
62335
62359
62362
62371
62412
62421
62464
62490

Класа: 5

62306
62307
62311
62318
62346
62351
62352
62355
62360
62371
62373
62375
62389
62393
62397
62398
62401
62406
62409
62410
62413
62414
62418
62419
62422
62427
62429
62437
62441
62442
62443
62444
62445
62452
62453
62454
62462
62464
62476
62477
62478
62479
62486
62491
62497
62498
62499

Класа: 6

62386
62392
62487
62493

Класа: 7

62330
62366
62386
62392
62487
62493

Класа: 8

62362
62371
62386
62412
62487
62493

Класа: 9

62324
62353
62359
62370
62372
62411
62417
62428
62438
62487
62489

Класа: 10

62409
62488

Класа: 11

62312
62368
62415
62487

Класа: 12

62328
62380
62381
62385
62387
62388

Класа: 14

62359
62465
62466

Класа: 15

62417

Класа: 16

62305
62324
62325
62353
62363
62415
62421
62428
62456
62464
62476
62487

Класа: 18

62329
62353
62390
62391
62420
62423
62425
62426
62458
62474

Класа: 19

62337
62338
62339
62340
62341
62342
62343
62367
62374
62431
62432
62487

Класа: 20

62369
62386
62415

Класа: 21

62348
62349
62362
62369
62412
62415
62424
62450
62451
62457
62460
62487

Класа: 22

62458
62487

Класа: 24

62353
62456

Класа: 25

62309
62310
62313
62327
62329
62336
62353
62355
62369
62390
62391
62420
62423
62425
62426
62456
62458
62461
62475
62480

Класа: 26

62359
62465
62466

Класа: 28

62353
62420
62488

Класа: 29

62308
62332
62357
62379
62416
62421
62424
62430
62446
62450
62451
62457
62468
62469
62470
62481
62482
62483
62484
62485

Класа: 30

62308
62318
62319
62320
62331
62334
62344
62347
62348
62349
62368
62378
62379
62402
62403
62404
62405
62416
62421
62422
62424
62437
62440
62446
62447
62448
62449
62450
62451
62457
62460
62463
62469
62470
62471
62472
62481
62482
62483
62484
62485

Класа: 31

62375
62384
62421
62476
62492

Класа: 32

62357
62376
62399
62421
62424
62439
62450
62451
62467

Класа: 33

62315
62326
62350
62357
62394
62400
62421
62455
62459

Класа: 34

62325
62361
62383
62496

Класа: 35

62324
62325
62329
62333
62345
62352
62353
62358
62363
62365
62375
62390
62391
62395
62396
62411
62423
62434
62435
62436
62438
62457
62465
62466
62473

62475
62476
62480

Класа: 36

62314
62324
62345
62353
62494
62495

Класа: 37

62407
62438
62489

Класа: 38

62345
62353
62358
62365
62382
62395
62396

62407
62408
62411
62428
62434
62435
62436
62489

Класа: 39

62302
62303
62304

62334
62345
62353
62364

Класа: 40

62374

Класа: 41

62302
62303
62304

62317
62353
62356
62358
62365
62395
62396
62420
62428
62433
62434
62435
62436

Класа: 42

62302
62303
62304
62333
62345
62353
62375
62407
62489

Класа: 43

62316
62324
62379
62400
62424
62450
62451
62457

Класа: 44

62364
62476

ОБЈАВА УПИСАНИХ ПРОМЕНА РЕГИСТРОВАНИХ ЖИГОВА ОД 06.04. 2011. ДО 05.06.2011. ГОДИНЕ

Publications of Entered Changes of Registered Trademarks from April 6th, 2011 to June 5th, 2011

1. Промена имена и адресе

Име и/или адреса носиоца жига рег.број **43698** промењена је у HEMOFARM d.o.o. ŠABAC, Hajduk Veljkova b.b, Šabac, RS

Име и/или адреса носиоца жига рег.број **43698** промењена је **у** HEMOFARM d.o.o. ŠABAC, Hajduk Veljkova b.b, Šabac, RS

Име и/или адреса носиоца жига рег.број **40382** промењена је у DRUŠTVO SA OGRANIČENOM ODGOVORNOŠĆU ZA PROIZVODNJU BOJA I LAKOVA , ZORKA COLOR ŠABAC, Hajduk Veljkova b.b., Šabac, RS

Име и/или адреса носиоца жига рег.број **40383** промењена је у DRUŠTVO SA OGRANIČENOM ODGOVORNOŠĆU ZA PROIZVODNJU BOJA I LAKOVA , ZORKA COLOR ŠABAC, Hajduk Veljkova b.b. Šabac, RS

Име и/или адреса носиоца жига рег.број **54577** промењена је у DRUŠTVO SA OGRANIČENOM ODGOVORNOŠĆU ZA PROIZVODNJU BOJA I LAKOVA ZORKA COLOR ŠABAC, Hajduk Veljkova bb, Šabac, RS

Име и/или адреса носиоца жига рег.број **34267** промењена је у Lucas Industries Limited, Stratford Road, Solihul, West Midlands B90 4AX, UK

Име и/или адреса носиоца жига рег.број **44434** промењена је у HALO OGLASI D.O.O. Preduzeće za izdavaštvo i usluge, Bulevar Mihajla Pupina 115đ, Novi Beograd, RS

Име и/или адреса носиоца жига рег.број **25169** промењена је у The H. D. Lee Company, Inc., 3411 Silverside Road, Wilmington, DE 19810, US

Име и/или адреса носиоца жига рег.број **38551** промењена је у INVISTA Technologies S.a.r.l., Pestalozzistrasse 2, CH-9000 St. Gallen, CH

Име и/или адреса носиоца жига рег.број **37873** промењена је у L.A. Gear, Inc. 844 Moraga Drive, 90049 LOS ANGELES, US

Име и/или адреса носиоца жига рег.број **54073** промењена је у CODAP EOOD, 12-14 Iliantsi, Sofia 1220, BG

Име и/или адреса носиоца жига рег.број **50739** промењена је у KIMBERLY-CLARK Sp. z o.o. Klucze-Osada 3, 32-310 Klucze, PL

Име и/или адреса носиоца жига рег.број **56589** промењена је у OPPO MEDICAL INC. 1030 Industry Drive, Tukwila, WA 98188, US

Име и/или адреса носиоца жига рег.број **19282** промењена је у ARLA FOODS AMBA, Sønderhøj 14, 8260 Viby J, DK

Име и/или адреса носиоца жига рег.број **39303** промењена је у ARLA FOODS AMBA, Sønderhøj 14, 8260 Viby J, DK

Име и/или адреса носиоца жига рег.број **39306** промењена је у ARLA FOODS AMBA, Sønderhøj 14, 8260 Viby J, DK

Име и/или адреса носиоца жига рег.број **44788** промењена је у RE/MAX International LLC, 5075 South Syracuse Street, Denver, Colorado 80237, US

Име и/или адреса носиоца жига рег.број **44788** промењена је у RE/MAX, LLC, 5075 South Syracuse Street, Denver, Colorado 80237, US

Име и/или адреса носиоца жига рег.број **46649** промењена је у Holt's Company (Delaware corporation), 1105 N. Market Street, Suite 1300, Wilmington, Delaware 19801, US

Име и/или адреса носиоца жига рег.број **38561** промењена је у B.G.I. BRANDS N.V. JOHN B. GORSIRAWEG 14, WILLEMSTAD, CURACAO, AN

Име и/или адреса носиоца жига рег.број **38561** промењена је у B.G.I. BRANDS N.V. Berg Arrarat 1, Willemstad, Curaçao, AN

Име и/или адреса носиоца жига рег.број **38561** промењена је у Bolton Brands S. à r. l. 3, Rue des Bains L-1212 Luxembourg, Grand-Duchy of Luxembourg, LU

Име и/или адреса носиоца жига рег.број **38562** промењена је у B.G.I. BRANDS N.V. JOHN B. GORSIRAWEG 14, WILLEMSTAD, CURACAO, AN

Име и/или адреса носиоца жига рег.број **38562** промењена је у B.G.I. BRANDS N.V. Berg Arrarat 1, Willemstad, Curaçao, AN

Име и/или адреса носиоца жига рег.број **38562** промењена је у Bolton Brands S. à r. l. 3, Rue des Bains L-1212 Luxembourg, Grand-Duchy of Luxembourg, LU

Име и/или адреса носиоца жига рег.број **38323** промењена је у Oracle America, Inc. 500 Oracle Parkway, Redwood Shores, California 94065, US

Име и/или адреса носиоца жига рег.број **38324** промењена је у Oracle America, Inc. 500 Oracle Parkway, Redwood Shores, California 94065, US

Име и/или адреса носиоца жига рег.број **36928** промењена је у Oracle America, Inc. 500 Oracle Parkway, Redwood Shores, California 94065, US

Име и/или адреса носиоца жига рег.број **45105** промењена је у Oracle America, Inc. 500 Oracle Parkway, Redwood Shores, California 94065, US

Име и/или адреса носиоца жига рег.број **46865** промењена је у Oracle America, Inc. 500 Oracle Parkway, Redwood Shores, California 94065, US

Име и/или адреса носиоца жига рег.број **46906** промењена је у Oracle America, Inc. 500 Oracle Parkway, Redwood Shores, California 94065, US

Име и/или адреса носиоца жига рег.број **43311** промењена је у Oracle America, Inc. 500 Oracle Parkway, Redwood Shores, California 94065, US

Име и/или адреса носиоца жига рег.број **40770** промењена је у Oracle America, Inc. 500 Oracle Parkway, Redwood Shores, California 94065, US

Име и/или адреса носиоца жига рег.број **40784** промењена је у Oracle America, Inc. 500 Oracle Parkway, Redwood Shores, California 94065, US

Име и/или адреса носиоца жига рег.број **42167** промењена је у Oracle America, Inc. 500 Oracle Parkway, Redwood Shores, California 94065, US

Име и/или адреса носиоца жига рег.број **42559** промењена је у Oracle America, Inc., 500 Oracle Parkway, Redwood Shores, California 94065, US

Име и/или адреса носиоца жига рег.број **42315** промењена је у Oracle America, Inc., 500 Oracle Parkway, Redwood Shores, California 94065, US

Име и/или адреса носиоца жига рег.број **49352** промењена је у Oracle America, Inc., 500 Oracle Parkway, Redwood Shores, California 94065, US

Име и/или адреса носиоца жига рег.број **23682** промењена је у Pactiv Corporation, 1900 West Field Court, Lake Forest, Illinois 60045, US

Име и/или адреса носиоца жига рег.број **39856** промењена је у RHODIA UK LIMITED, OAK HOUSE, REEDS CRESCENT, WATFORD, HERTS WD24 4QP, ENGLESKA, GB

Име и/или адреса носиоца жига рег.број **38614** промењена је у CONOPCO, INC. , 700 Sylvan Avenue, Englewood Cliffs, NJ 07632, US

Име и/или адреса носиоца жига рег.број **47481** промењена је у SCHERING-PLOUGH LTD., Weystrasse 20, CH-6000 Lucerne 6, CH

Име и/или адреса носиоца жига рег.број **47480** промењена је у SCHERING-PLOUGH LTD., Weystrasse 20, CH-6000 Lucerne 6, CH

Име и/или адреса носиоца жига рег.број **47725** промењена је у OLD NAVY (ITM) INC, a California corporation, 2 Folsom Street, San Francisko, California, US

Име и/или адреса носиоца жига рег.број **18966** промењена је у LRC PRODUCTS LIMITED, 103-105 Bath Road, Slough, SL1 3UH, Engleska, GB

Име и/или адреса носиоца жига рег.број **33420** промењена је у LRC PRODUCTS LIMITED, 103-105 Bath Road, Slough, SL1 3UH, Engleska, GB

Име и/или адреса носиоца жига рег.број **50806** промењена је у LRC Products Limited, 103-105 Bath Road, Slough, SL1 3UH, Engleska, GB

Име и/или адреса носиоца жига рег.број **51845** промењена је у LRC PRODUCTS LIMITED, 103-105 Bath Road, Slough, SL1 3UH, Engleska, GB

Име и/или адреса носиоца жига рег.број **50536** промењена је у LRC PRODUCTS LIMITED, 103-105 Bath Road, Slough, SL1 3UH, Engleska, GB

Име и/или адреса носиоца жига рег.број **51846** промењена је у LRC PRODUCTS LIMITED, 103-105 Bath Road, Slough, SL1 3UH, Engleska, GB

Име и/или адреса носиоца жига рег.број **50537** промењена је у LRC PRODUCTS LIMITED, 103-105 Bath Road, Slough, SL1 3UH, Engleska, GB

Име и/или адреса носиоца жига рег.број **50529** промењена је у LRC PRODUCTS LIMITED, 103-105 Bath Road, Slough, SL1 3UH, Engleska, GB

Име и/или адреса носиоца жига рег.број **51255** промењена је у LRC PRODUCTS LIMITED, 103-105 Bath Road, Slough, SL1 3UH, Engleska, GB

Име и/или адреса носиоца жига рег.број **48804** промењена је у LRC Products Limited, 103-105 Bath Road, Slough, SL1 3UH, Engleska, GB

Име и/или адреса носиоца жига рег.број **49974** промењена је у Georgia-Pacific S.à.r.l. 25, route d'Esch, L-1470 Luxembourg , LU

Име и/или адреса носиоца жига рег.број **37918** промењена је у The Concentrate Manufacturing Company of Ireland (also trading as Seven-Up International) Corner House, 20 Parliament Street, Hamilton, BM

Име и/или адреса носиоца жига рег.број **54699** промењена је у Wyeth LLC, Five Giralda Farms, Madison, New Jersey 07940, US

Име и/или адреса носиоца жига рег.број **52028** промењена је у "TEHNOMARKET", d.o.o. Skadarska 73, 26000 Pančevo, RS

Име и/или адреса носиоца жига рег.број **40556** промењена је у A.D. "CENTROPROIZVOD", prehrambena industrija, Beograd-Surčin, Dobanovački put bb, RS

Име и/или адреса носиоца жига рег.број **40557** промењена је у A.D. "CENTROPROIZVOD", prehrambena industrija, Beograd-Surčin, Dobanovački put bb, RS

Име и/или адреса носиоца жига рег.број **40558** промењена је у A.D. "CENTROPROIZVOD", prehrambena industrija, Beograd-Surčin, Dobanovački put bb, RS

Име и/или адреса носиоца жига рег.број **40559** промењена је у A.D. "CENTROPROIZVOD", prehrambena industrija, Beograd-Surčin, Dobanovački put bb, RS

Име и/или адреса носиоца жига рег.број **40560** промењена је у A.D. "CENTROPRIOZVOD" prehrambena industrija, Beograd-Surčin, Dobanovački put bb, RS

Име и/или адреса носиоца жига рег.број **40561** промењена је у A.D. "CENTROPROIZVOD" prehrambena industrija, Beograd-Surčin, Dobanovački put bb, RS

Име и/или адреса носиоца жига рег.број **40562** промењена је у A.D. "CENTROPROIZVOD" prehrambena industrija, Beograd-Surčin, Dobanovački put bb, RS

Име и/или адреса носиоца жига рег.број **40563** промењена је у A.D. "CENTROPROIZVOD" prehrambena industrija, Beograd-Surčin, Dobanovački put bb, RS

Име и/или адреса носиоца жига рег.број **40564** промењена је у A.D. "CENTROPROIZVOD" prehrambena industrija, Beograd-Surčin, Dobanovački put bb, RS

Име и/или адреса носиоца жига рег.број **40565** промењена је у A.D. "CENTROPROIZVOD" prehrambena industrija, Beograd-Surčin, Dobanovački put bb, RS

Име и/или адреса носиоца жига рег.број **40566** промењена је у A.D. "CENTROPROIZVOD" prehrambena industrija, Beograd-Surčin, Dobanovački put bb, RS

Име и/или адреса носиоца жига рег.број **40567** промењена је у A.D. "CENTROPROIZVOD", prehrambena industrija, Beograd-Surčin, Dobanovački put bb, RS

Име и/или адреса носиоца жига рег.број **40568** промењена је у A.D. "CENTROPROIZVOD" prehrambena industrija, Beograd-Surčin, Dobanovački put bb, RS

Име и/или адреса носиоца жига рег.број **40582** промењена је у A.D. "CENTROPROIZVOD", prehrambena industrija, Beograd-Surčin, Dobanovački put bb, RS

Име и/или адреса носиоца жига рег.број **40569** промењена је у A.D. "CENTROPROIZVOD" , prehrambena industrija, Beograd-Surčin, Dobanovački put bb, RS

Име и/или адреса носиоца жига рег.број **40570** промењена је у A.D. "CENTROPROIZVOD", prehrambena industrija, Beograd-Surčin, Dobanovački put bb, RS

Име и/или адреса носиоца жига рег.број **40571** промењена је у A.D. "CENTROPROIZVOD", prehrambena industrija, Beograd-Surčin, Dobanovački put bb, RS

Име и/или адреса носиоца жига рег.број **40572** промењена је у A.D. "CENTROPROIZVOD", prehrambena industrija, Beograd-Surčin, Dobanovački put bb, RS

Име и/или адреса носиоца жига рег.број **40573** промењена је у A.D. "CENTROPROIZVOD",,, prehrambena industrija, Beograd-Surčin, Dobanovački put bb, RS

Име и/или адреса носиоца жига рег.број **40574** промењена је у A.D. "CENTROPROIZVOD", prehrambena industrija, Beograd-Surčin, Dobanovački put bb, RS

Име и/или адреса носиоца жига рег.број **61535** промењена је у Goran Zec PR, AGENCIJA ZA POSLOVNE I USLUŽNE DELATNOSTI SINERGIJA PLUS, Beograd, Sandžačka 45, RS

Име и/или адреса носиоца жига рег.број **61601** промењена је у "BLATNIK SERBIA" d.o.o. Beograd Bulevar Arsenija Čarnojevića 102, Beograd-Novi Beograd, RS

Име и/или адреса носиоца жига рег.број **61053** промењена је у "BLATNIK SERBIA" d.o.o. Beograd Bulevar Arsenija Čarnojevića 102, Beograd-Novi Beograd, RS

Име и/или адреса носиоца жига рег.број **61088** промењена је у "ТИМ PEKARA", Privrednikova 4a, Novi Sad, RS

Име и/или адреса носиоца жига рег.број **61088** промењена је у "BLATNIK SERBIA" d.o.o. Beograd Bulevar Arsenija Čarnojevića 102, Beograd-Novi Beograd, RS

Име и/или адреса носиоца жига рег.број **61087** промењена је у "ТИМ PEKARA", Privrednikova 4a, Novi Sad, RS

Име и/или адреса носиоца жига рег.број **61087** промењена је у "BLATNIK SERBIA" d.o.o. Beograd Bulevar Arsenija Čarnojevića 102, Beograd-Novi Beograd, RS

Име и/или адреса носиоца жига рег.број **60742** промењена је у "ТИМ PEKARA", Privrednikova 4a, Novi Sad, RS

Име и/или адреса носиоца жига рег.број **60742** промењена је у "BLATNIK SERBIA" d.o.o. Beograd, Bulevar Arsenija Čarnojevića 102, Beograd-Novi Beograd, RS

Име и/или адреса носиоца жига рег.број **61080** промењена је у "ТИМ PEKARA", Privrednikova 4a, Novi Sad, RS

Име и/или адреса носиоца жига рег.број **61080** промењена је у "BLATNIK SERBIA" d.o.o. Beograd, Bulevar Arsenija Čarnojevića 102, Beograd-Novi Beograd, RS

Име и/или адреса носиоца жига рег.број **62062** промењена је у "ТИМ PEKARA", Privrednikova 4a, Novi Sad, RS

Име и/или адреса носиоца жига рег.број **62062** промењена је у "BLATNIK SERBIA" d.o.o. Beograd, Bulevar Arsenija Čarnojevića 102, Beograd-Novi Beograd, RS

Име и/или адреса носиоца жига рег.број **60743** промењена је у "ТИМ PEKARA", Privrednikova 4a, Novi Sad, RS

Име и/или адреса носиоца жига рег.број **60743** промењена је у "BLATNIK SERBIA" d.o.o. Beograd Bulevar Arsenija Čarnojevića 102, Beograd-Novi Beograd, RS

Име и/или адреса носиоца жига рег.број **60744** промењена је у "ТИМ PEKARA", Privrednikova 4a, Novi Sad, RS

Име и/или адреса носиоца жига рег.број **60744** промењена је у "BLATNIK SERBIA" d.o.o. Beograd Bulevar Arsenija Čarnojevića 102, Beograd-Novi Beograd, RS

Име и/или адреса носиоца жига рег.број **62424** промењена је у "BLATNIK SERBIA" d.o.o. Beograd, Bulevar Arsenija Čarnojevića 102, Beograd-Novi Beograd, RS

Име и/или адреса носиоца жига рег.број **62450** промењена је у "BLATNIK SERBIA" d.o.o. Beograd, Bulevar Arsenija Čarnojevića 102, Beograd-Novi Beograd, RS

Име и/или адреса носиоца жига рег.број **62451** промењена је у "BLATNIK SERBIA" d.o.o. Beograd Bulevar Arsenija Čarnojevića 102, Beograd-Novi Beograd, RS

Име и/или адреса носиоца жига рег.број **38646** промењена је у SCANDINAVIAN TOBACCO GROUP ASSENS A/S, Tobaksvej 1, DK-5610 Assens, DK

Име и/или адреса носиоца жига рег.број **35822** промењена је у HEMOFARM A.D. farmaceutsko-hemijska industrija Vršac,Beogradski put bb, 26300 Vršac, RS

Име и/или адреса носиоца жига рег.број **37821** промењена је у FOUR SEASONS HOTELS (BARBADOS) LTD., Chancery House, High Street, Bridgetown, Barbados, West Indies, BB

Име и/или адреса носиоца жига рег.број **20944** промењена је у KANEKA CORPORATION, 2-4, Nakanoshima 3-chome, Kita-ku, Osaka-shi, Osaka 530-8288, JP

Име и/или адреса носиоца жига рег.број **28043** промењена је у WILLIAM GRANT & SONS IRISH MANUFACTURING LIMITED, 3rd Floor, Unit 3C, The Plaza, Block 71, Park West Business Park, Dublin 12, IE

Име и/или адреса носиоца жига рег.број **48389** промењена је у WILLIAM GRANT & SONS IRISH MANUFACTURING LIMITED, 3rd Floor, Unit 3C, The Plaza, Block 71, Park West Business Park, Dublin 12, IE

Име и/или адреса носиоца жига рег.број **47098** промењена је у Diners Club International Ltd. (New York Corporation), 2500 Lake Cook Road, Riverwoods, Illinois 60015, US

Име и/или адреса носиоца жига рег.број **47099** промењена је у Diners Club International Ltd. (New York Corporation), 2500 Lake Cook Road, Riverwoods, Illinois 60015, US

Име и/или адреса носиоца жига рег.број 15073 промењена је у KRATON POLYMERS RESEARCH B.V. Asterweg 19A1, 1031 HL Amsterdam, NL

Име и/или адреса носиоца жига рег.број **18894** промењена је у INVISTA Technologies S.à.r.l., Pestalozzistrasse 2, CH-9000 St. Gallen, CH

Име и/или адреса носиоца жига рег.број **16637** промењена је у THE CONCENTRATE MANUFACTURING COMPANY OF IRELAND, poznata kao SEVEN-UP INTERNATIONAL, Corner House, 20 Parliament Street, Hamilton, Bermuda, BM

Име и/или адреса носиоца жига рег.број **16636** промењена је у THE CONCENTRATE MANUFACTURING COMPANY OF IRELAND (poznata kao SEVEN-UP INTERNATIONAL) Corner House, 20 Parliament Street, Hamilton, Bermuda, BM

Име и/или адреса носиоца жига рег.број **49261** промењена је у THE CONCENTRATE MANUFACTURING COMPANY OF IRELAND (posluje i kao SEVEN-UP INTERNATIONAL) Corner House, 20 Parliament Street, Hamilton, Bermuda, BM

Име и/или адреса носиоца жига рег.број **41181** промењена је у THE CONCENTRATE MANUFACTURING COMPANY OF IRELAND, also trading as SEVEN-UP INTERNATIONAL Corner House, 20 Parliament Street, Hamilton, Bermuda, BM

Име и/или адреса носиоца жига рег.број **41182** промењена је у THE CONCENTRATE MANUFACTURING COMPANY OF IRELAND, also trading as SEVEN-UP INTERNATIONAL Corner House, 20 Parliament Street, Hamilton, Bermuda, BM

Име и/или адреса носиоца жига рег.број **27191** промењена је у THE CONCENTRATE MANUFACTURING COMPANY OF IRELAND (такође poznata kao SEVEN-UP INTERNATIONAL), Corner House, 20 Parliament Street, Hamilton, Bermuda, BM

Име и/или адреса носиоца жига рег.број **27035** промењена је у THE CONCENTRATE MANUFACTURING COMPANY OF IRELAND (poznata kao SEVEN-UP INTERNATIONAL), Corner House, 20 Parliament Street, Hamilton, Bermuda, BM

Име и/или адреса носиоца жига рег.број **48016** промењена је у Invicta Watch Company of America, Inc. (Florida corporation), 3069 Taft Street, Hollywood, FL 33021, US

Име и/или адреса носиоца жига рег.број **49643** промењена је у RANCO INCORPORATED OF DELAWARE (Delaware corporation), 191 E. North Avenue, Carol Stream, Illinois 60188, US

Име и/или адреса носиоца жига рег.број **37826** промењена је у LORILLARD TOBACCO COMPANY, 714 Green Valley, Greensboro, North Carolina 27408, US

Име и/или адреса носиоца жига рег.број **37833** промењена је у LORILLARD TOBACCO COMPANY, 714 Green Valley, Greensboro, North Carolina 27408, US

Име и/или адреса носиоца жига рег.број **37836** промењена је у LORILLARD TOBACCO COMPANY, 714 Green Valley, Greensboro, North Carolina 27408, US

Име и/или адреса носиоца жига рег.број **45129** промењена је у Express, LLC (Delaware limited liability company), 1 Express Drive, Columbus, Ohio 43230, US

Име и/или адреса носиоца жига рег.број **48626** промењена је у Express, LLC (Delaware limited liability company), 1 Express Drive, Columbus, Ohio 43230, US

Име и/или адреса носиоца жига рег.број **47247** промењена је у Express, LLC (Delaware limited liability company), 1 Express Drive, Columbus, Ohio 43230, US

Име и/или адреса носиоца жига рег.број **25575** промењена је у SONY CORPORATION, 1-7-1 Konan, Minato-ku, Tokyo, JP

Име и/или адреса носиоца жига рег.број **43786** промењена је у EKO-SAN Preduzeće za ekološku sanitaciju, zaštitu i transport doo, Bulevar despota Stefana br. 128, 11000 Beograd, RS

Име и/или адреса носиоца жига рег.број **47004** промењена је у EKO-SAN Preduzeće za ekološku sanitaciju, zaštitu i transport doo, Bulevar despota Stefana br. 128, 11000 Beograd, RS

Име и/или адреса носиоца жига рег.број **44143** промењена је у EKO-SAN Preduzeće za ekološku sanitaciju, zaštitu i transport doo, Bulevar despota Stefana br. 128, 11000 Beograd, RS

Име и/или адреса носиоца жига рег.број **47240** промењена је у EKO-SAN Preduzeće za ekološku sanitaciju, zaštitu i transport doo, Bulevar despota Stefana br. 128, 11000 Beograd, RS

Име и/или адреса носиоца жига рег.број **47243** промењена је у EKO-SAN Preduzeće za ekološku sanitaciju, zaštitu i transport doo, Bulevar despota Stefana br. 128, 11000 Beograd, RS

Име и/или адреса носиоца жига рег.број **42880** промењена је у KYE SYSTEMS CORPORATION 1-8 FL., NO. 492, SEC. 5, CHONGXIN RD., SANCHONG DIST., NEW TAIPEI CITY 24160, TW

Име и/или адреса носиоца жига рег.број **20268** промењена је у MAYTAG PROPERTIES, LLC, 500 Renaissance Drive, Suite 101, St. Joseph, Michigan 49085, US

Име и/или адреса носиоца жига рег.број **48983** промењена је у "PAN UNION OIL" DOO, FUTOG, Svetozara Markovića 35, 21410 Futog, RS

Име и/или адреса носиоца жига рег.број **48287** промењена је у PERIHARD INŽENJERING, D.O.O. Preduzeće za izradu informatičke opreme i softvera, elektronskih i električnih aparata, Kneginje Zorke 24, Beograd, RS

Име и/или адреса носиоца жига рег.број **48041** промењена је у PERIHARD INŽENJERING, D.O.O. Preduzeće za izradu informatičke opreme i softvera, elektronskih i električnih aparata, Kneginje Zorke 24, Beograd, RS

Име и/или адреса носиоца жига рег.број **42526** промењена је у Abbott Products Operations AG, Hegenheimermattweg 127, 4123 Allschwil , CH

Име и/или адреса носиоца жига рег.број **42525** промењена је у Abbott Products Operations AG, Hegenheimermattweg 127, 4123 Allschwil , CH

Име и/или адреса носиоца жига рег.број **42524** промењена је у Abbott Products Operations AG, Hegenheimermattweg 127, 4123 Allschwil , CH

Име и/или адреса носиоца жига рег.број **42527** промењена је у Abbott Products Operations AG, Hegenheimermattweg 127, 4123 Allschwil , CH

Име и/или адреса носиоца жига рег.број **44654** промењена је у Abbott Products Operations AG, Hegenheimermattweg 127, 4123 Allschwil , CH

Име и/или адреса носиоца жига рег.број **49316** промењена је у Anadolu Efes Biracilik ve Malt Sanayii A.S Bahçelievler Mah. Adnan Kahveci Bulvari No: 5, Bahçelievler Istanbul, TR

Име и/или адреса носиоца жига рег.број **49317** промењена је у Anadolu Efes Biracilik ve Malt Sanayii A.S Bahçelievler Mah. Adnan Kahveci Bulvari No: 5, Bahçelievler Istanbul, TR

Име и/ или адреса носиоца жига рег.број **50371** промењена је у Ssangbangwool & Try Group, Inc.161-17, Samsung-dong, Kangnam-ku, Seoul, KR

Име и/или адреса носиоца жига рег.број **49318** промењена је у Anadolu Efes Biracilik ve Malt Sanayii A.SBahçelievler Mah. Adnan Kahveci Bulvari No: 5, Bahçelievler Istanbul, TR

Име и/или адреса носиоца жига рег.број **50172** промењена је у Anadolu Efes Biracilik ve Malt Sanayii A.S Bahçelievler Mah. Adnan Kahveci Bulvari No: 5, Bahçelievler Istanbul, TR

Име и/или адреса носиоца жига рег.број **58345** промењена је у Anadolu Efes Biracilik ve Malt Sanayii A.S Bahçelievler Mah. Adnan Kahveci Bulvari No: 5, Bahçelievler Istanbul, TR

Име и7или адреса носиоца жига рег.број **34241** промењена је у Abbott Products GmbH, Hans-Böckler-Alle 20, 30173 Hannover, DE

Име и/или адреса носиоца жига рег.број **35837** промењена је у HEMOFARM A.D. farmacutsko - hemijska industrija Vršac, Beogradski put bb, 26300 Vršac, RS

Име и/или адреса носиоца жига рег.број 3**5836** промењена је у HEMOFARM A.D. farmacutsko - hemijska industrija Vršac, Beogradski put bb, 26300 Vršac, RS

Име и/или адреса носиоца жига рег.број **35836** промењена је у HEMOFARM A.D. farmacutsko - hemijska industrija Vršac, Beogradski put bb, 26300 Vršac, RS

Име и/или адреса носиоца жига рег.број **43242** промењена је у "SIMPO" akcionarsko društvo za proizvodnju, promet i usluge, Vranje, ul. Radnička br. 12, RS

Име и/или адреса носиоца жига рег.број **55636** промењена је у Mlekara Mihajlović DOO, Knjaza Miloša 71a, Paraćin, RS

2. Пренос права

За жиг бр. **37189** извршен је пренос на Clarion Co., Ltd.,5-35-2, Hakusan, Bunkyo-ku, Tokyo 112-8608, JP

За жиг бр. **41880** извршен је пренос на ABL Realisations Limited and MasterManager LLC, 2000 Purchase Street, Purchase NY 10577-2509, US

За жиг бр. **41880** извршен је пренос на MasterCard International Incorporated,2000 Purchase Street, Purchase NY 10577-2509, US

За жиг бр. **60330** извршен је пренос на Privredno društvo za proizvodnju i trgovinu VIR d.o.o. , Šabački put b.b., Loznica, RS

За жиг бр. **60330** извршен је пренос на Delta Maxi d.o.o. , Beograd, Takovska br. 49, RS

За жиг бр. 60331 извршен је пренос на Privredno društvo za proizvodnju i trgovinu VIR d.o.o. Šabački put b.b., Loznica, RS

За жиг бр. **60331** извршен је пренос на Delta Maxi d.o.o. ,Beograd, Takovska br. 49, RS

За жиг бр. **60332** извршен је пренос на Privredno društvo za proizvodnju i trgovinu VIR d.o.o. Šabački put b.b., Loznica, RS

За жиг бр. 60332 извршен је пренос на Delta Maxi d.o.o. ,Beograd, Takovska br. 49, RS

За жиг бр. **60333** извршен је пренос на Privredno društvo za proizvodnju i trgovinu VIR d.o.o. Šabački put b.b., Loznica, RS

За жиг бр**. 60333** извршен је пренос на Delta Maxi d.o.o. ,Beograd, Takovska br. 49, RS

За жиг бр. **61095** извршен је пренос на Privredno društvo za proizvodnju i trgovinu VIR d.o.o. Šabački put b.b., Loznica, RS

За жиг бр. **61095** извршен је пренос на Delta Maxi d.o.o. ,Beograd, Takovska br. 49, RS

За жиг бр. **61094** извршен је пренос на Privredno društvo za proizvodnju i trgovinu VIR d.o.o. Šabački put b.b., Loznica, RS

За жиг бр. **61094** извршен је пренос на Delta Maxi d.o.o. ,Beograd, Takovska br. 49, RS

За жиг бр. **61092** извршен је пренос на Privredno društvo za proizvodnju i trgovinu VIR d.o.o. Šabački put b.b., Loznica, RS

За жиг бр. **61092** извршен је пренос на Delta Maxi d.o.o. ,Beograd, Takovska br. 49, RS

За жиг бр. **61093** извршен је пренос на Privredno društvo za proizvodnju i trgovinu VIR d.o.o. Šabački put b.b., Loznica, RS

За жиг бр. **61093** извршен је пренос на Delta Maxi d.o.o. ,Beograd, Takovska br. 49, RS

За жиг бр. **37101** извршен је пренос на KATALIN HALAS PREDUZETNIK, SPECIJALIZOVANA PROIZVODNJA ELEKTRONSKIH ELEKTRIČNIH UREĐAJA I PRIBORA ZA MOTORNA VOZILA I REKREATIVNE SPORTSKE AKTIVNOSTI MOTORCO, Viragova 2, Horgoš, RS

За жиг бр. **40017** извршен је пренос на Brach's Confections, Inc. 19111 N.Dallas Parkway, Suite 200, Dallas, Texas 75287, US

За жиг бр. **40017** извршен је пренос на Farley's & Sathers Candy Company, Inc.,P.O. Box 28, One Sather Plaza, Round Lake, Minnesota 56167 , US;

За жиг бр. **36835** извршен је пренос на FEDERATION FRANCAISE DE TENNIS, Stade Roland Garros 2, Avenue Gordon Bennett, 75016 Paris, FR

За жиг бр. **40014** извршен је пренос на Crimson Holding Corporation (Delaware corporation), 698 West 10000 South, Suite 500, South Jordan, UT 84095, US

За жиг бр. **40014** извршен је пренос на LANDesk Group Limited, Avocent House, Shannon Free Zone, Contry Clare, IR

За жиг бр. **40014** извршен је пренос на Crimson Corporation ,698 West 10000 South, Suite 500, South Jordan, UT 84095, US

За жиг бр. **44997** извршен је пренос на Марко Мартиновић, Гандијева 198, Нови Београд, RS, и Јован Лукић, Владете Ковачевића 4, Београд, RS

За жиг бр. **44998** извршен је пренос на Марко Мартиновић, Гандијева 198, Нови Београд, RS, и Јован Лукић, Владете Ковачевића 4, Београд, RS

За жиг бр. **49108** извршен је пренос на Fashion Chemicals GmbH & Co. KG, Am Trippelsberg 92, D-40589 Düsseldorf, DE

За жиг бр. **14673** извршен је пренос на Philip Morris Brands Sàrl, Quai Jeanrenaud 3, CH-2000 Neuchâtel, CH

За жиг бр. **14850** извршен је пренос на Philip Morris Brands Sàrl, Quai Jeanrenaud 3, CH-2000 Neuchâtel, CH

За жиг бр. **50874** извршен је пренос на Philip Morris Brands Sàrl, Quai Jeanrenaud 3, CH-2000 Neuchâtel, CH

За жиг бр. **21193** извршен је пренос на Philip Morris Brands Sàrl, Quai Jeanrenaud 3, CH-2000 Neuchâtel, CH

За жиг бр. **24760** извршен је пренос на Philip Morris Brands Sàrl, Quai Jeanrenaud 3, CH-2000 Neuchâtel, CH

За жиг бр. **59131** извршен је пренос на Philip Morris Brands Sàrl, Quai Jeanrenaud 3, CH-2000 Neuchâtel, CH

За жиг бр. **24117** извршен је пренос на Philip Morris Brands Sàrl, Quai Jeanrenaud 3, CH-2000 Neuchâtel, CH

За жиг бр. **15442** извршен је пренос на Philip Morris Brands Sàrl, Quai Jeanrenaud 3, CH-2000 Neuchâtel, CH

За жиг бр. **45502** извршен је пренос на Philip Morris Brands Sàrl, Quai Jeanrenaud 3, CH-2000 Neuchâtel, CH

За жиг бр. **24169** извршен је пренос на Philip Morris Brands Sàrl,Quai Jeanrenaud 3, CH-2000 Neuchâtel, CH

За жиг бр. **14771** извршен је пренос на Philip Morris Brands Sàrl, Quai Jeanrenaud 3, CH-2000 Neuchâtel, CH

За жиг бр. **19148** извршен је пренос на Philip Morris Brands Sàrl, Quai Jeanrenaud 3, CH-2000 Neuchâtel, CH

За жиг бр. **24026** извршен је пренос на Philip Morris Brands Sàrl, Quai Jeanrenaud 3, CH-2000 Neuchâtel, CH

За жиг бр. **23695** извршен је пренос на Philip Morris Brands Sàrl, Quai Jeanrenaud 3, CH-2000 Neuchâtel, CH

За жиг бр. **19150** извршен је пренос на Philip Morris Brands Sàrl, Quai Jeanrenaud 3, CH-2000 Neuchâtel, CH

За жиг бр. 19149 извршен је пренос на Philip Morris Brands Sàrl ,Quai Jeanrenaud 3, CH-2000 Neuchâtel, CH

За жиг бр. **23409** извршен је пренос на Philip Morris Brands Sàrl, Quai Jeanrenaud 3, CH-2000 Neuchâtel, CH

За жиг бр. **14168** извршен је пренос на Philip Morris Brands Sàrl, Quai Jeanrenaud 3, CH-2000 Neuchâtel, CH

За жиг бр. **26332** извршен је пренос на Philip Morris Brands Sàrl, Quai Jeanrenaud 3, CH-2000 Neuchâtel, CH

За жиг бр. **24208** извршен је пренос на Philip Morris Brands Sàrl, Quai Jeanrenaud 3, CH-2000 Neuchâtel, CH

За жиг бр. **57236** извршен је пренос на Philip Morris Brands Sàrl, Quai Jeanrenaud 3, CH-2000 Neuchâtel, CH

За жиг бр. **24665** извршен је пренос на Philip Morris Brands Sàrl, Quai Jeanrenaud 3, CH-2000 Neuchâtel, CH

За жиг бр. **45805** извршен је пренос на Philip Morris Brands Sàrl, Quai Jeanrenaud 3, CH-2000 Neuchâtel, CH

За жиг бр. **45731** извршен је пренос на Philip Morris Brands Sàrl , Quai Jeanrenaud 3, CH-2000 Neuchâtel, CH

За жиг бр. **29390** извршен је пренос на Philip Morris Brands Sàrl, Quai Jeanrenaud 3, CH-2000 Neuchâtel, CH

За жиг бр. **29066** извршен је пренос на Philip Morris Brands Sàrl, Quai Jeanrenaud 3, CH-2000 Neuchâtel, CH

За жиг бр. **21731** извршен је пренос на Philip Morris Brands Sàrl, Quai Jeanrenaud 3, CH-2000 Neuchâtel, CH

За жиг бр. **60080** извршен је пренос на Philip Morris Brands Sàrl, Quai Jeanrenaud 3, CH-2000 Neuchâtel, CH

За жиг бр. **57770** извршен је пренос на Philip Morris Brands Sàrl, Quai Jeanrenaud 3, CH-2000 Neuchâtel, CH

За жиг бр. **37974** извршен је пренос на RITZ ENTERPRISE S.A., 11 avenue Calas, CP 447, Geneva 12, CH 1211, CH

За жиг бр. **37974** извршен је пренос на THE RITZ HOTEL, LIMITED,14 South Street, London W1Y 5PJ, UK

За жиг бр. **34730** извршен је пренос на RITZ ENTERPRISE S.A., 11 avenue Calas, CP 447, Geneva 12, CH 1211, CH

За жиг бр. **34730** извршен је пренос на THE RITZ HOTEL, LIMITED,14 South Street, London W1Y 5PJ, UK

За жиг бр. **23682** извршен је пренос на Tenneco Packaging Inc., 1900 West Field Court, Lake Forest, Illinois 60045, US

За жиг бр. **45226** извршен је пренос на Ziff Davis, Inc., 28 East 28th Street, New York, New York 10016, US

За жиг бр. **33798** извршен је пренос на Sky IP International Limited, Grant Way, Isleworth TW7 5QD, UK

За жиг бр. **33797** извршен је пренос на Sky IP International Limited, Grant Way, Isleworth TW7 5QD, UK

За жиг бр. **18334** извршен је пренос на FUCHS PETROLUB AG, Friesenheimer Strasse 17, 68169 Mannheim, DE

За жиг бр. **49256** извршен је пренос на Juvena Marlies Möller AG ,Industriestrasse 8, 8604 Volketswil, CH

За жиг бр. **61035** извршен је пренос на Motorola Trademark Holdings, LLC, 600 North U.S., Highway 45. Libertyville, IL 60048, US

За жиг бр. **58305** извршен је пренос на Motorola Trademark Holdings, LLC, 600 North U.S., Highway 45. Libertyville, IL 60048, US

За жиг бр. **59772** извршен је пренос на Motorola Trademark Holdings, LLC, 600 North U.S., Highway 45. Libertyville, IL 60048, US

За жиг бр. **59771** извршен је пренос на Motorola Trademark Holdings, LLC, 600 North U.S., Highway 45. Libertyville, IL 60048, US

За жиг бр. **24876** извршен је пренос на Motorola Trademark Holdings, LLC, 600 North U.S., Hihgway 45. Libertville, IL 60048, US

За жиг бр. **24877** извршен је пренос на Motorola Trademark Holdings, LLC, 600 North U.S., Highway 45. Libertyville, IL 60048, US

За жиг бр. **47689** извршен је пренос на Motorola Trademark Holdings, LLC, 600 North U.S., Highway 45. Libertyville, IL 60048, US

За жиг бр. **48522** извршен је пренос на Motorola Trademark Holdings, LLC, 600 North U.S., Highway 45. Libertyville, IL 60048, US

За жиг бр. **50707** извршен је пренос на Motorola Trademark Holdings, LLC, 600 North U.S., Highway 45. Libertyville, IL 60048, US

За жиг бр. **51592** извршен је пренос на Motorola Trademark Holdings, LLC, 600 North U.S., Highway 45. Libertyville, IL 60048, US

За жиг бр. **53732** извршен је пренос на Motorola Trademark Holdings, LLC, 600 North U.S., Highway 45. Libertyville, IL 60048, US

За жиг бр. **53824** извршен је пренос на Motorola Trademark Holdings, LLC , 600 North U.S., Highway 45. Libertyville, IL 60048, US

За жиг бр. **54593** извршен је пренос на Motorola Trademark Holdings, LLC, 600 North U.S., Highway 45. Libertyville, IL 60048, US

За жиг бр. **54594** извршен је пренос на Motorola Trademark Holdings, LLC, 600 North U.S., Highway 45. Libertyville, IL 60048, US

За жиг бр. **56013** извршен је пренос на Motorola Trademark Holdings, LLC, 600 North U.S., Highway 45. Libertyville, IL 60048, US

За жиг бр. **56014** извршен је пренос на Motorola Trademark Holdings, LLC, 600 North U.S., Highway 45. Libertyville, IL 60048, US

За жиг бр. **56504** извршен је пренос на Motorola Trademark Holdings, LLC, 600 North U.S., Highway 45. Libertyville, IL 60048, US

За жиг бр. **56402** извршен је пренос на Motorola Trademark Holdings, LLC, 600 North U.S., Highway 45. Libertyville, IL 60048, US

За жиг бр. **56913** извршен је пренос на Motorola Trademark Holdings, LLC, 600 North U.S., Highway 45. Libertyville, IL 60048, US

За жиг бр. **56910** извршен је пренос на Motorola Trademark Holdings, LLC, 600 North U.S., Highway 45. Libertyville, IL 60048, US

За жиг бр. **60894** извршен је пренос на Motorola Trademark Holdings, LLC, 600 North U.S., Highway 45. Libertyville, IL 60048, US

За жиг бр. **60872** извршен је пренос на Motorola Trademark Holdings, LLC, 600 North U.S., Highway 45. Libertyville, IL 60048, US

За жиг бр. **60315** извршен је пренос на Motorola Trademark Holdings, LLC, 600 North U.S., Highway 45. Libertyville, IL 60048, US

За жиг бр. **59767** извршен је пренос на Motorola Trademark Holdings, LLC, 600 North U.S., Highway 45. Libertyville, IL 60048, US

За жиг бр. **58693** извршен је пренос на Motorola Trademark Holdings, LLC, 600 North U.S., Highway 45. Libertyville, IL 60048, US

За жиг бр. **58485** извршен је пренос на Motorola Trademark Holdings, LLC, 600 North U.S., Highway 45. Libertyville, IL 60048, US

За жиг бр. **58597** извршен је пренос на Motorola Trademark Holdings, LLC, 600 North U.S., Highway 45. Libertyville, IL 60048, US

За жиг бр. **56909** извршен је пренос на Motorola Trademark Holdings, LLC, 600 North U.S., Highway 45. Libertyville, IL 60048, US

За жиг бр. **58304** извршен је пренос на Motorola Trademark Holdings, LLC, 600 North U.S., Highway 45. Libertyville, IL 60048, US

За жиг бр. **57862** извршен је пренос на Motorola Trademark Holdings, LLC, 600 North U.S., Hihgway 45. Libertville, IL 60048, US

За жиг бр. **49257** извршен је пренос на ROYAL ELASTICS HOLDING LTD,Suite 3306, 33/F Tower 6, The Gateway, 9 Canton Road, Tsimshatsui, HK

За жиг бр. **37826** извршен је пренос на LORILLARD LICENSING COMPANY LLC, 1600 Wachovia Tower, 300 North Greene Street, Suite 1601, Greensboro, North Carolina 27401, US

За жиг бр. **37833** извршен је пренос на LORILLARD LICENSING COMPANY LLC, 1600 Wachovia Tower, 300 North Greene Street, Suite 1601, Greensboro, North Carolina 27401, US

За жиг бр. **37836** извршен је пренос на LORILLARD LICENSING COMPANY LLC, 1600 Wachovia Tower, 300 North Greene Street, Suite 1601, Greensboro, North Carolina 27401, US

За жиг бр. **34832** извршен је пренос на INSTITUTO DE TURISMO DE ESPAÑA (TURESPAÑA), José Lázaro Galdiano, 6-4, 28036 Madrid , ES

За жиг бр. **37030** извршен је пренос на Eveready Battery Company, Inc., 533 Maryville University Drive, St. Louis, Missouri 63141, US

За жиг бр. **47279** извршен је пренос на Zohar Waterworks, LLC, Limited Liability Company of the State of Delaware,222 E. Campus View Blvd., Columbus, Ohio 43235, US

За жиг бр. **56225** извршен је пренос на Guangzhou Haojin Motorcycle Co., Ltd., Shangshao Industrial District, Lixin Road, Xintag Town, Zengcheng City, Guangdong Province, 51340, CN

За жиг бр. **56112** извршен је пренос на Guangzhou Haojin Motorcycle Co., Ltd., Shangshao Industrial District, Lixin Road, Xintag Town, Zengcheng City, Guangdong Province, 51340, CN

За жиг бр. **19688** извршен је пренос на CARTOGEN SWEDEN AKTIEBOLAG, Box 1133, Malaxgatan 7, SE-16422 Kista, SE

3 Упис залоге

За жиг бр. **51327** уписана је залога на CREDIT AGRICOLE BANKA SRBIJA AKCIONARSKO DRUŠTVO NOVI SAD, Braće Ribnikar 4-6, 21000 Novi Sad, RS

За жиг бр. **51326** уписана је залога на CREDIT AGRICOLE BANKA SRBIJA AKCIONARSKO DRUŠTVO NOVI SAD , Braće Ribnikar 4-6, 21000 Novi Sad, RS

За жиг бр. **50770** уписана је залога на CREDIT AGRICOLE BANKA SRBIJA AKCIONARSKO DRUŠTVO NOVI SAD, Braće Ribnikar 4-6, 21000 Novi Sad, RS

За жиг бр. **50771** уписана је залога на CREDIT AGRICOLE BANKA SRBIJA AKCIONARSKO DRUŠTVO NOVI SAD, Braće Ribnikar 4-6, 21000 Novi Sad, RS

За жиг бр. **50773** уписана је залога на CREDIT AGRICOLE BANKA SRBIJA AKCIONARSKO DRUŠTVO NOVI SAD, Braće Ribnikar 4-6, 21000 Novi Sad, RS

За жиг бр. **51328** уписана је залога на CREDIT AGRICOLE BANKA SRBIJA AKCIONARSKO DRUŠTVO NOVI SAD, Braće Ribnikar 4-6, 21000 Novi Sad, RS

За жиг бр. **51409** уписана је залога на CREDIT AGRICOLE BANKA SRBIJA AKCIONARSKO DRUŠTVO NOVI SAD, Braće Ribnikar 4-6, 21000 Novi Sad, RS

За жиг бр. **41152** уписана је залога на CREDIT AGRICOLE BANKA SRBIJA AKCIONARSKO DRUŠTVO NOVI SAD, Braće Ribnikar 4-6, 21000 Novi Sad, RS

За жиг бр. **41150** уписана је залога на CREDIT AGRICOLE BANKA SRBIJA AKCIONARSKO DRUŠTVO NOVI SAD, Braće Ribnikar 4-6, 21000 Novi Sad, RS

За жиг бр. **41149** уписана је залога на CREDIT AGRICOLE BANKA SRBIJA AKCIONARSKO DRUŠTVO NOVI SAD, Braće Ribnikar 4-6, 21000 Novi Sad, RS

За жиг бр. **41147** уписана је залога на CREDIT AGRICOLE BANKA SRBIJA AKCIONARSKO DRUŠTVO NOVI SAD, Braće Ribnikar 4-6, 21000 Novi Sad, RS

За жиг бр. **41146** уписана је залога на CREDIT AGRICOLE BANKA SRBIJA AKCIONARSKO DRUŠTVO NOVI SAD, Braće Ribnikar 4-6, 21000 Novi Sad, RS

За жиг бр. **41145** уписана је залога на CREDIT AGRICOLE BANKA SRBIJA AKCIONARSKO DRUŠTVO NOVI SAD, Braće Ribnikar 4-6, 21000 Novi Sad, RS

За жиг бр. **41142** уписана је залога на CREDIT AGRICOLE BANKA SRBIJA AKCIONARSKO DRUŠTVO NOVI SAD, Braće Ribnikar 4-6, 21000 Novi Sad, RS

За жиг бр. **52009** уписана је залога на CREDIT AGRICOLE BANKA SRBIJA AKCIONARSKO DRUŠTVO NOVI SAD, Braće Ribnikar 4-6, 21000 Novi Sad, RS

За жиг бр. **52596** уписана је залога на CREDIT AGRICOLE BANKA SRBIJA AKCIONARSKO DRUŠTVO NOVI SAD, Braće Ribnikar 4-6, 21000 Novi Sad, RS

За жиг бр. **52560** уписана је залога на CREDIT AGRICOLE BANKA SRBIJA AKCIONARSKO DRUŠTVO NOVI SAD, Braće Ribnikar 4-6, 21000 Novi Sad, RS

За жиг бр. **52691** уписана је залога на CREDIT AGRICOLE BANKA SRBIJA AKCIONARSKO DRUŠTVO NOVI SAD, Braće Ribnikar 4-6, 21000 Novi Sad, RS

За жиг бр. **52689** уписана је залога на CREDIT AGRICOLE BANKA SRBIJA AKCIONARSKO DRUŠTVO NOVI SAD, Braće Ribnikar 4-6, 21000 Novi Sad, RS

За жиг бр. **52692** уписана је залога на CREDIT AGRICOLE BANKA SRBIJA AKCIONARSKO DRUŠTVO NOVI SAD, Braće Ribnikar 4-6, 21000 Novi Sad, RS

За жиг бр. **52690** уписана је залога на CREDIT AGRICOLE BANKA SRBIJA AKCIONARSKO DRUŠTVO NOVI SAD, Braće Ribnikar 4-6, 21000 Novi Sad, RS

За жиг бр. **55474** уписана је залога на CREDIT AGRICOLE BANKA SRBIJA AKCIONARSKO DRUŠTVO NOVI SAD, Braće Ribnikar 4-6, 21000 Novi Sad, RS

За жиг бр. **55473** уписана је залога на CREDIT AGRICOLE BANKA SRBIJA AKCIONARSKO DRUŠTVO NOVI SAD, Braće Ribnikar 4-6, 21000 Novi Sad, RS

За жиг бр. **55283** уписана је залога на CREDIT AGRICOLE BANKA SRBIJA AKCIONARSKO DRUŠTVO NOVI SAD, Braće Ribnikar 4-6, 21000 Novi Sad, RS

За жиг бр. **55216** уписана је залога на CREDIT AGRICOLE BANKA SRBIJA AKCIONARSKO DRUŠTVO NOVI SAD, Braće Ribnikar 4-6, 21000 Novi Sad, RS

За жиг бр. **55242** уписана је залога на CREDIT AGRICOLE BANKA SRBIJA AKCIONARSKO DRUŠTVO NOVI SAD, Braće Ribnikar 4-6, 21000 Novi Sad, RS

За жиг бр. **53899** уписана је залога на CREDIT AGRICOLE BANKA SRBIJA AKCIONARSKO DRUŠTVO NOVI SAD, Braće Ribnikar 4-6, 21000 Novi Sad, RS

За жиг бр. **53056** уписана је залога на CREDIT AGRICOLE BANKA SRBIJA AKCIONARSKO DRUŠTVO NOVI SAD, Braće Ribnikar 4-6, 21000 Novi Sad, RS

За жиг бр. **53092** уписана је залога на CREDIT AGRICOLE BANKA SRBIJA AKCIONARSKO DRUŠTVO NOVI SAD, Braće Ribnikar 4-6, 21000 Novi Sad, RS

За жиг бр. **53091** уписана је залога на CREDIT AGRICOLE BANKA SRBIJA AKCIONARSKO DRUŠTVO NOVI SAD, Braće Ribnikar 4-6, 21000 Novi Sad, RS

За жиг бр. **53095** уписана је залога на CREDIT AGRICOLE BANKA SRBIJA AKCIONARSKO DRUŠTVO NOVI SAD, Braće Ribnikar 4-6, 21000 Novi Sad, RS

За жиг бр. **57857** уписана је залога на CREDIT AGRICOLE BANKA SRBIJA AKCIONARSKO DRUŠTVO NOVI SAD, Braće Ribnikar 4-6, 21000 Novi Sad, RS

За жиг бр. **57856** уписана је залога на CREDIT AGRICOLE BANKA SRBIJA AKCIONARSKO DRUŠTVO NOVI SAD, Braće Ribnikar 4-6, 21000 Novi Sad, RS

За жиг бр. **57855** уписана је залога на CREDIT AGRICOLE BANKA SRBIJA AKCIONARSKO DRUŠTVO NOVI SAD, Braće Ribnikar 4-6, 21000 Novi Sad, RS

За жиг бр. **57854** уписана је залога на CREDIT AGRICOLE BANKA SRBIJA AKCIONARSKO DRUŠTVO NOVI SAD, Braće Ribnikar 4-6, 21000 Novi Sad, RS

За жиг бр. **51895** уписана је залога на CREDIT AGRICOLE BANKA SRBIJA AKCIONARSKO DRUŠTVO NOVI SAD, Braće Ribnikar 4-6, 21000 Novi Sad, RS

За жиг бр. **46414** уписана је залога на UNICREDIT BANK AG London Branch, Moor House, 120 London Wall, London, EC2Y 5ET, UK

За жиг бр. **44266** уписана је залога на NLB INTERFINANZ AG, Beethovenstrasse 48, Cirih, CH

За жиг бр. **44710** уписана је залога на NLB INTERFINANZ AG, Beethovenstrasse 48, Cirih, CH

За жиг бр. **45137** уписана је залога на NLB INTERFINANZ AG, Beethovenstrasse 48, Cirih, CH

За жиг бр. **48692** уписана је залога на NLB INTERFINANZ AG, Beethovenstrasse 48, Cirih, CH

За жиг бр. **48692** уписана је залога на NLB INTERFINANZ AG, Beethovenstrasse 48, Cirih, CH

За жиг бр. **48693** уписана је залога на NLB INTERFINANZ AG, Beethovenstrasse 48, Cirih, CH

За жиг бр. **48693** уписана је залога на NLB INTERFINANZ AG, Beethovenstrasse 48, Cirih, CH

За жиг бр. **50272** уписана је залога на NLB INTERFINANZ AG, Beethovenstrasse 48, Cirih, CH

За жиг бр. **53153** уписана је залога на NLB INTERFINANZ AG, Beethovenstrasse 48, Cirih, CH

За жиг бр. **52447** уписана је залога на NLB Interfinanz AG, Beethovenstrasse 48, Cirih, CH

За жиг бр. **52448** уписана је залога на NLB Interfinanz AG, Beethovenstrasse 48, Cirih, CH

За жиг бр. **53576** уписана је залога на NLB Interfinanz AG, Beethovenstrasse 48, Cirih, CH

За жиг бр. **51910** уписана је залога на NLB Interfinanz AG, Beethovenstrasse 48, Cirih, CH

За жиг бр. **51911** уписана је залога на NLB Interfinanz AG, Beethovenstrasse 48, Cirih, CH

За жиг бр. **51912** уписана је залога на NLB Interfinanz AG, Beethovenstrasse 48, Cirih, CH

За жиг бр. **51913** уписана је залога на NLB Interfinanz AG, Beethovenstrasse 48, Cirih, CH

За жиг бр. **51914** уписана је залога на NLB Interfinanz AG, Beethovenstrasse 48, Cirih, CH

За жиг бр. **53687** уписана је залога на NLB INTERFINANZ AG, Beethovenstrasse 48, Cirih, CH

За жиг бр. **53688** уписана је залога на NLB Interfinanz AG, Beethovenstrasse 48, Cirih, CH

За жиг бр. **51285** уписана је залога на NLB INTERFINANZ AG, Beethovenstrasse 48, Cirih, CH

За жиг бр. **51306** уписана је залога на NLB Interfinanz AG, Beethovenstrasse 48, Cirih, CH

За жиг бр. **51302** уписана је залога на NLB Interfinanz AG, Beethovenstrasse 48, Cirih, CH

За жиг бр. **53938** уписана је залога на NLB Interfinanz AG, Beethovenstrasse 48, Cirih, CH

За жиг бр. **54558** уписана је залога на NLB Interfinanz AG, Beethovenstrasse 48, Cirih, CH;

За жиг бр. **54464** уписана је залога на NLB Interfinanz AG, Beethovenstrasse 48, Cirih, CH

За жиг бр. **55107** уписана је залога на NLB INTERFINANZ AG, Beethovenstrasse 48, Cirih, CH

За жиг бр. **55367** уписана је залога на NLB INTERFINANZ AG, Beethovenstrasse 48, Cirih, CH

За жиг бр. **55371** уписана је залога на NLB INTERFINANZ AG, Beethovenstrasse 48, Cirih, CH

За жиг бр. **55743** уписана је залога на NLB INTERFINANZ AG, Beethovenstrasse 48, Cirih, CH

За жиг бр. **55742** уписана је залога на NLB INTERFINANZ AG, Beethovenstrasse 48, Cirih, CH

За жиг бр. **55741** уписана је залога на NLB INTERFINANZ AG , Beethovenstrasse 48, Cirih, CH

За жиг бр. **58534** уписана је залога на NLB INTERFINANZ AG, Beethovenstrasse 48, Cirih, CH

За жиг бр. **55740** уписана је залога на NLB INTERFINANZ AG, Beethovenstrasse 48, Cirih, CH

За жиг бр. **57382** уписана је залога на NLB Interfinanz AG ,Beethovenstrasse 48, Cirih, CH

За жиг бр. **56889** уписана је залога на NLB INTERFINANZ AG, Beethovenstrasse 48, Cirih, CH

За жиг бр. **56888** уписана је залога на NLB Interfinanz AG, Beethovenstrasse 48, Cirih, CH

За жиг бр. **56046** уписана је залога на NLB INTERFINANZ AG, Beethovenstrasse 48, Cirih, CH

За жиг бр. **58536** уписана је залога на NLB INTERFINANZ AG, Beethovenstrasse 48, Cirih, CH

За жиг бр. **58535** уписана је залога на NLB INTERFINANZ AG , Beethovenstrasse 48, Cirih, CH

За жиг бр. **58538** уписана је залога на NLB INTERFINANZ AG, Beethovenstrasse 48, Cirih, CH

За жиг бр. **58537** уписана је залога на NLB INTERFINANZ AG, Beethovenstrasse 48, Cirih, CH

За жиг бр. **55977** уписана је залога на NLB INTERFINANZ AG, Beethovenstrasse 48, Cirih, CH

За жиг бр. **59129** уписана је залога на NLB INTERFINANZ AG, Beethovenstrasse 48, Cirih, CH

За жиг бр. **59130** уписана је залога на NLB INTERFINANZ AG ,Beethovenstrasse 48, Cirih, CH

За жиг бр. **59199** уписана је залога на NLB INTERFINANZ AG, Beethovenstrasse 48, Cirih, CH

За жиг бр. **58873** уписана је залога на NLB INTERFINANZ AG , Beethovenstrasse 48, Cirih, CH

За жиг бр. **58871** уписана је залога на NLB INTERFINANZ AG, Beethovenstrasse 48, Cirih, CH

За жиг бр. **58872** уписана је залога на NLB Interfinanz AG, Beethovenstrasse 48, Cirih, CH

За жиг бр. **59045** уписана је залога на NLB INTERFINANZ AG, Beethovenstrasse 48, Cirih, CH

За жиг бр. **58891** уписана је залога на NLB INTERFINANZ AG, Beethovenstrasse 48, Cirih, CH

За жиг бр. **58892** уписана је залога на NLB INTERFINANZ AG, Beethovenstrasse 48, Cirih, CH

За жиг бр. **59572** уписана је залога на NLB INTERFINANZ AG, Beethovenstrasse 48, Cirih, CH

За жиг бр. **60672** уписана је залога на NLB INTERFINANZ AG, Beethovenstrasse 48, Cirih, CH

За жиг бр. **60672** уписана је залога на NLB INTERFINANZ AG, Beethovenstrasse 48, Cirih, CH

За жиг бр. **60644** уписана је залога на NLB INTERFINANZ AG, Beethovenstrasse 48, Cirih, CH

За жиг бр. **60644** уписана је залога на NLB INTERFINANZ AG, Beethovenstrasse 48, Cirih, CH

За жиг бр. **60643** уписана је залога на NLB INTERFINANZ AG, Beethovenstrasse 48, Cirih, CH

За жиг бр. **60643** уписана је залога на NLB INTERFINANZ AG, Beethovenstrasse 48, Cirih, CH

За жиг бр. **61342** уписана је залога на NLB INTERFINANZ AG, Beethovenstrasse 48, Cirih, CH

За жиг бр. **61343** уписана је залога на NLB INTERFINANZ AG, Beethovenstrasse 48, Cirih, CH

За жиг бр. **59795** уписана је залога на NLB INTERFINANZ AG, Beethovenstrasse 48, Cirih, CH

За жиг бр. **59794** уписана је залога на NLB INTERFINANZ AG, Beethovenstrasse 48, Cirih, CH

За жиг бр**. 60646** уписана је залога на NLB Interfinanz AG, Beethovenstrasse 48, Cirih, CH

За жиг бр. **59815** уписана је залога на NLB INTERFINANZ AG, Beethovenstrasse 48, Cirih, CH

За жиг бр. **62101** уписана је залога на NLB INTERFINANZ AG, Beethovenstrasse 48, Cirih, CH

За жиг бр. **62101** уписана је залога на NLB INTERFINANZ AG, Beethovenstrasse 48, Cirih, CH

За жиг бр. **62102** уписана је залога на NLB Interfinanz AG, Beethovenstrasse 48, Cirih, CH

За жиг бр. **62102** уписана је залога на NLB Interfinanz AG, Beethovenstrasse 48, Cirih, CH

За жиг бр. **62103** уписана је залога на NLB INTERFINANZ AG, Beethovenstrasse 48, Cirih, CH

За жиг бр. **62103** уписана је залога на NLB INTERFINANZ AG, Beethovenstrasse 48, Cirih, CH

За жиг бр. **62104** уписана је залога на NLB INTERFINANZ AG, Beethovenstrasse 48, Cirih, CH

За жиг бр. **62104** уписана је залога на NLB INTERFINANZ AG, Beethovenstrasse 48, Cirih, CH

За жиг бр. **62105** уписана је залога на NLB INTERFINANZ AG, Beethovenstrasse 48, Cirih, CH

За жиг бр. **62105** уписана је залога на NLB INTERFINANZ AG, Beethovenstrasse 48, Cirih, CH

За жиг бр. **62106** уписана је залога на NLB INTERFINANZ AG, Beethovenstrasse 48, Cirih, CH

За жиг бр. **62106** уписана је залога на NLB INTERFINANZ AG, Beethovenstrasse 48, Cirih, CH

За жиг бр. **62107** уписана је залога на NLB INTERFINANZ AG, Beethovenstrasse 48, Cirih, CH

За жиг бр. **62107** уписана је залога на NLB INTERFINANZ AG, Beethovenstrasse 48, Cirih, CH

За жиг бр. **62108** уписана је залога на NLB INTERFINANZ AG, Beethovenstrasse 48, Cirih, CH

За жиг бр. **62108** уписана је залога на NLB INTERFINANZ AG, Beethovenstrasse 48, Cirih, CH

За жиг бр. **62325** уписана је залога на NLB INTERFINANZ AG, Beethovenstrasse 48, Cirih, CH

За жиг бр. **62325** уписана је залога на NLB INTERFINANZ AG, Beethovenstrasse 48, Cirih, CH

За жиг бр. **60771** уписана је залога на NLB INTERFINANZ AG, Beethovenstrasse 48, Cirih, CH

За жиг бр. **60771** уписана је залога на NLB INTERFINANZ AG, Beethovenstrasse 48, Cirih, CH

За жиг бр. **45185** уписана је залога на NLB Interfinanz AG, Beethovenstrasse 48, Cirih, CH

3. Ограничење списка робе, односно услуга

За жиг бр. **18894** ограничен списак роба, односно услуга тако да се заштита убудуће односи за робе и услуге у класама: 1, 22, 23, 24 и 27.

ПРЕСТАНАК ВАЖНОСТИ РЕГИСТРОВАНИХ ЖИГОВА

1. Због неплаћања таксе за продужење важења у периоду од 06.10.2010. до 05.12.2010. године:

Жиг рег. бр. **12225** чији је носилац THE PERMUTIT COMPANY, LAVERSTOKE MILL, WHITCHURCH, HAMPSHIRE RG28 7NR, ENGLESKA, GB, престао је да важи дана 26.10.2010. године.

Жиг рег. бр. **12232** чији је носилац J. & P. COATS LIMITED, 155 ST. VINCENT STREET, GLASGOW, ŠKOTSKA, GB, престао је да важи дана 26.10.2010. године.

Жиг рег. бр. **12237** чији је носилац UNITED STATES STEEL CORPORATION, 525 WILLIAM PENN PLACE, PITTSBERGH, PENNSYLVANIA, US престао је да важи дана 15.11.2010. године.

Жиг рег. бр. **12245** чији је носилац Noveon IP Holdings Corp. and Emerald Polymer Additives, LLC, 9911 Brecksville Road Cleveland,Ohio 44141-3247, US and 240 W.Emerling Avenue, Akron, Ohio 44301, US престао је да важи дана 15.11.2010. године.

Жиг рег. бр. **15677** чији је носилац PLIVA, FARMACEUTSKA INDUSTRIJA, DIONIČKO DRUŠTVO, ZAGREB, ULICA GRADA VUKOVARA 49, HR, престао је да важи дана 8.10.2010. године.

Жиг рег. бр. **15692** чији је носилац PLIVA, FARMACEUTSKA INDUSTRIJA, DIONIČARSKO DRUŠTVO, ZAGREB, ULICA GRADA VUKOVARA 49, HR , престао је да важи дана 16.10.2010. године.

Жиг рег. бр. **16041** чији је носилац PLIVA, FARMACEUTSKA INDUSTRIJA, DIONIČKO DRUŠTVO, ZAGREB, ULICA GRADA VUKOVARA 49, HR, престао је да важи дана 12.10.2010. године.

Жиг рег. бр. **16388** чији је носилац PLIVA, FARMACEUTSKA INDUSTRIJA, DIONIČKO DRUŠTVO, ZAGREB, ULICA GRADA VUKOVARA 49, HR, престао је да важи дана 22.10.2010. године.

Жиг рег. бр. 18373 чији је носилац DIN "Fabrika duvana" Niš a.d. u sastavu Philip Morris International, 12.februar 74, Niš, RS, престао је да важи дана 22.10.2010. године.

Жиг рег. бр. **18374** чији је носилац DIN "Fabrika duvana" Niš a.d., u sastavu Philip Morris International, 12.februar 74, Niš, RS, престао је да важи дана 22.10.2010. године.

Жиг рег. бр. **18675** чији је носилац PARKE, DAVIS & COMPANY LLC, 201 TABOR ROAD, MORRIS PLAINS, NEW JERSEY 07950, US, престао је да важи дана 27.10.2010. године.

Жиг рег. бр. **18677** чији је носилац AMOCO OIL COMPANY, 200 EAST RANDOLPH DRIVE, CHICAGO, ILLINOIS, US, престао је да важи дана 27.10.2010. године.

Жиг рег. бр. **18700** чији је носилац AMOCO OIL COMPANY, 200 EAST RANDOLPH DRIVE, CHICAGO, ILLINOIS, US, престао је да важи дана 27.10.2010. године.

Жиг рег. бр. **18706** чији је носилац EXXON MOBIL CORPORATION, 5959 Las Colinas Boulevard, Irving, Texas, 75039-2298, US, престао је да важи дана 27.10.2010. године.

Жиг рег. бр. **18708** чији је носилац NAVIP, NARODNO VINARSTVO I PODRUMARSTVO, ZEMUN, SIME ŠOLAJE 7., RS, престао је да важи дана 27.10.2010. године.

Жиг рег. бр. **18710** чији је носилац NAVIP, NARODNO VINARSTVO I PODRUMARSTVO, ZEMUN, SIME ŠOLAJE 7., RS, престао је да важи дана 27.10.2010. године.

Жиг рег. бр. **18722** чији је носилац WYETH, FIVE GIRALDA FARMS,MADISON,NEW JERSEY 07940, US, престао је да важи дана 27.10.2010. године.

Жиг рег. бр. **24895** чији је носилац CITIBANK N.A., 399 PARK AVENUE, NEW YORK, N.Y. 10022, US, престао је да важи дана 10.10.2010. године.

Жиг рег. бр. **24909** чији је носилац SYVA COMPANY, 3403 YERBA BUENA ROAD,SAN JOSE,CALIFORNIA 95161, US, престао је да важи дана 10.10.2010. године.

Жиг рег. бр. **24916** чији је носилац SHELL BRANDS INTERNATIONAL AG, Baarermatte, 6340 Baar Switzerland, CH, престао је да важи дана 10.10.2010. године.

Жиг рег. бр. **24925** чији је носилац HEAD SPORTS AG, A-6921 KENNELBACH, AT, престао је да важи дана 10.10.2010. године.

Жиг рег. бр. **24938** чији је носилац BP AMOCO P.L.C., BRITANNIC HOUSE, 1 FINSBURY CIRCUS, LONDON EC2M 7BA, ENGLESKA, GB, престао је да важи дана 10.10.2010. године.

Жиг рег. бр. **24939** чији је носилац BP AMOCO P.L.C., BRITANNIC HOUSE, 1 FINSBURY CIRCUS, LONDON EC2M 7BA, ENGLESKA, GB, престао је да важи дана 10.10.2010. године.

Жиг рег. бр. **24942** чији је носилац ROHM & HAAS COMPANY, 100 INDEPENDENCE MALL WEST, PHILADELPHIA, PA 19106-2399, US престао је да важи дана 10.10.2010. године.

Жиг рег. бр. **24948** чији је носилац WYETH, FIVE GIRALDA FARMS,MADISON,NEW JERSEY 07940, US, престао је да важи дана 10.10.2010. године.

Жиг рег. бр. **24960** чији је носилац ALCAN INC., 1188 Sherbrooke Street West, MONTREAL, QUEBEC, CANADA H3A 3G2, CA, престао је да важи дана 30.10.2010. године.

Жиг рег. бр. **24979** чији је носилац VARIAN MEDICAL SYSTEMS, INC., 3100 Hansen Way, Palo Alto, CA 94304, US, престао је да важи дана 30.10.2010. године.

Жиг рег. бр. **24985** чији је носилац LEK farmacevtska družba d.d., 1526 Ljubljana, Verovškova 57, SI, престао је да важи дана 30.10.2010. године.

Жиг рег. бр. **24988** чији је носилац ExxonMobil Oil Corporation, 5959 Las Colinas Boulevard, Irving, TX 75039-2298, US, престао је да важи дана 30.10.2010. године.

Жиг рег. бр. **24991** чији је носилац E.I. DU PONT DE NEMOURS & COMPANY, 1007 Market Street, Wilmington, Delaware 19898, US, престао је да важи дана 30.10.2010. године.

Жиг рег. бр. **25001** чији је носилац LEK farmacevtska družba d.d., 1526 Ljubljana, Verovškova 57, SI, престао је да важи дана 10.11.2010. године.

Жиг рег. бр. **25005** чији је носилац FARMACEUTSKA HEMISKA KOZMETIČKA INDUSTRIJA ALKALOID AD SKOPJE C.O., BULEVAR ALEKSANDAR MAKEDONSKI 12, SKOPJE, MK, престао је да важи дана 20.11.2010. године.

Жиг рег. бр. **25006** чији је носилац FARMACEUTSKA HEMISKA KOZMETIČKA INDUSTRIJA ALKALOID AD SKOPJE C.O., BULEVAR ALEKSANDAR MAKEDONSKI 12, SKOPJE, MK, престао је да важи дана 20.11.2010. године.

Жиг рег. бр. **35339** чији је носилац DP ZDRAVLJE, FARMACEUTSKO HEMIJSKA INDUSTRIJA, LESKOVAC, VLAJKOVA 199, YU, престао је да важи дана 18.10.2010. године.

Жиг рег. бр. **36212** чији је носилац SLOVENIJALES družba za trgovino in druge storitve,dd, DUNAJSKA CESTA BR.22 1511 LJUBLJANA, SI, престао је да важи дана 13.11.2010. године.

Жиг рег. бр. **36533** чији је носилац GOLDEN VALE FOOD PRODUCTS LTD, CHARLEVILLE, COUNTY CORK, IE, престао је да важи дана 8.10.2010. године.

Жиг рег. бр. **36577** чији је носилац JOHNSONDIVERSEY INC., 8310 16th STREET, STURTEVANT, WISCONSIN 53177, US, престао је да важи дана 23.10.2010. године.

Жиг рег. бр. **36578** чији је носилац S.C. JOHNSON & SON, INC., 1525 HOWE STREET, RACINE, WISCONSIN 53403, US, престао је да важи дана 23.10.2010. године.

Жиг рег. бр. **36589** чији је носилац POLAROID CORPORATION, 1265 Main Street, Waltham, Massachusetts, 02451, US, престао је да важи дана 15.11.2010. године.

Жиг рег. бр. **36590** чији је носилац POLAROID CORPORATION, 1265 Main Street, Waltham, Massachusetts, 02451, US, престао је да важи дана 15.11.2010. године.

Жиг рег. бр. **36591** чији је носилац POLAROID CORPORATION, 1265 Main Street Waltham, Massachusetts 02451, US, престао је да важи дана 15.11.2010. године.

Жиг рег. бр. **36596** чији је носилац HBI Branded Apparel Enterprises, LLC (Delaware limited liability company), 1000 East Hanes Mill Road, Winston-Salem, North Carolina 27105, US, престао је да важи дана 16.11.2010. године.

Жиг рег. бр. **36654** чији је носилац MARS GB LIMITED, 3D DUNDEE ROAD, SLOUGH, BERKSHIRE SL1 4LG, ENGLESKA, GB, престао је да важи дана 7.11.2010. године.

Жиг рег. бр. **36656** чији је носилац MARS DRINKS UK LIMITED, 3D Dundee Road, Slough, Berkshire, SL1 4LG, England, UK, престао је да важи дана 7.11.2010. године.

Жиг рег. бр. **36657** чији је носилац BRITISH AMERICAN TOBACCO (BRANDS) LIMITED, Globe House, 4 Temple Place, London WC2R 2PG, GB, престао је да важи дана 7.11.2010. године.

Жиг рег. бр. **36658** чији је носилац LEK farmacevtska družba d.d., 1526 Ljubljana, Verovškova 57, SI, престао је да важи дана 7.11.2010. године.

Жиг рег. бр. **36716** чији је носилац Glaxo Group Limited, a British company, Glaxo Wellcome House, Berkeley Avenue, Greenford, Middlesex UB6 0NN, GB престао је да важи дана 24.10.2010. године.

Жиг рег. бр. **36767** чији је носилац BEIERSDORF AG, UNNASTRASSE 48, HAMBURG 20, DE, престао је да важи дана 10.10.2010. године.

Жиг рег. бр. **36771** чији је носилац A/S ANTHON BERG, DK-2750 BALLERUP, DK, престао је да важи дана 17.10.2010. године.

Жиг рег. бр. **36778** чији је носилац BATMARK, INC., 1209 ORANGE STREET, WILMINGTON, DELAWARE, US, престао је да важи дана 29.10.2010. године.

Жиг рег. бр. **36779** чији је носилац MARS CHOCOLATE UK LIMITED, 3D Dundee Road, Slough, Berkshire, SL1 4LG, England, UK, престао је да важи дана 30.10.2010. године.

Жиг рег. бр. **36784** чији је носилац REMBRANDT TOBACCO CORPORATION (OVERSEAS) LIMITED, ZAHLERWEG 4, 6300 ZUG, ŠVAJCARSKA, CH, престао је да важи дана 10.10.2010. године.

Жиг рег. бр. **36800** чији је носилац DIN "Fabrika duvana" Niš a.d., u sastavu Philip Morris International, 12. februar 74, Niš, RS, престао је да важи дана 26.11.2010. године.

Жиг рег. бр. **36801** чији је носилац DOW AGROSCIENCES LLC, 9330 ZIONSVILLE ROAD, INDIANAPOLIS, INDIANA 46268, US, престао је да важи дана 26.11.2010. године.

Жиг рег. бр. **36802** чији је носилац DURING AG, BRUNNENWIESENSTRASSE 14, 8108 DALLIKON, CH, престао је да важи дана 3.12.2010. године.

Жиг рег. бр. **37020** чији је носилац GLAXO GROUP LIMITED, GLAXO HOUSE, BERKELEY AVENUE, GREENFORD, MIDDLESEX UB6 0NN, ENGLAND, GB, престао је да важи дана 17.10.2010. године.

Жиг рег. бр. **37027** чији је носилац MARS INCORPORATED, 6885 ELM STREET, McLEAN-VIRGINIA 22101-3883, US, престао је да важи дана 19.10.2010. године.

Жиг рег. бр. **37042** чији је носилац Citizen Holdings Kabushiki Kaisha (Citizen Holdings Co., Ltd.), 1-12, 6-chome, Tanashi-cho, Nishi-tokyo-shi, Tokyo, JP престао је да важи дана 31.10.2010. године.

Жиг рег. бр. **37043** чији је носилац FOUNTAIN NETHERLANDS HOLDING B.V., BARONIELAAN 139 NL-4818 PD BREDA, NL, престао је да важи дана 31.10.2010. године.

Жиг рег. бр. **37055** чији је носилац BERNARD CHAUS, INC., 1410 BROADWAY, NEW YORK, NEW YORK, US, престао је да важи дана 5.11.2010. године.

Жиг рег. бр. **37057** чији је носилац MARS U.K. LIMITED and MEI, Inc., 3D DUNDEE ROAD, SLOUGH, BERKSHIRE SL1 4LG, ENGLESKA, GB and 1301 Wilson Drive, West Chester, Pennsylvania 19380, US, престао је да важи дана 7.11.2010. године.

Жиг рег. бр. **37063** чији је носилац Anheuser-Busch InBev S.A., Grand-Place 1, 1000 Brussels, BE престао је да важи дана 13.11.2010. године.

Жиг рег. бр. **37069** чији је носилац STENA LINE SCANDINAVIA AB, 405 19 GOTEBORG ŠVEDSKA, SE, престао је да важи дана 20.11.2010. године.

Жиг рег. бр. **37076** чији је носилац KRYPTONICS, INC., 5660 CENTRAL AVENUE, BOULDER, COLORADO 80301, US, престао је да важи дана 27.11.2010. године.

Жиг рег. бр. **37077** чији је носилац DIN "Fabrika duvana" Niš a.d., u sastavu Philip Morris International, 12. februar 74, Niš, RS, престао је да важи дана 27.11.2010. године.

Жиг рег. бр. **37088** чији је носилац H.J. HEINZ COMPANY, 600 Grant Street, Pittsburgh, Pennsylvania , 15212, US, престао је да важи дана 3.12.2010. године.

Жиг рег. бр. **37135** чији је носилац TOMS FABRIKKER A/S, DK-2750 BALLERUP, DK, престао је да важи дана 17.10.2010. године.

Жиг рег. бр. **37142** чији је носилац PIONEER INDUSTRIAL CORPORATION, 4th FLOOR, NO.139, SUNG CHIANG ROAD, TAIPEI, TW, престао је да важи дана 12.11.2010. године.

Жиг рег. бр. **37187** чији је носилац MEIJI SEIKA KAISHA, LTD., 4-16, KYOBASHI 2-CHOME, CHUO-KU, TOKYO, JP, престао је да важи дана 9.10.2010. године.

Жиг рег. бр. **37229** чији је носилац QWEST COMMUNICATIONS INTERNATIONAL INC., a Delaware corporation, 1801 CALIFORNIA STREET, SUITE 5100, DENVER, COLORADO 80202, US, престао је да важи дана 10.10.2010. године.

Жиг рег. бр. **37230** чији је носилац QWEST COMMUNICATIONS INTERNATIONAL INC., a Delaware corporation, 1801 CALIFORNIA STREET, SUITE 5100, DENVER, COLORADO 80202, US, престао је да важи дана 10.10.2010. године.

Жиг рег. бр. **37231** чији је носилац QWEST COMMUNICATIONS INTERNATIONAL INC.(a Delaware corporation), 1801 CALIFORNIA STREET,SUITE 5100, DENVER, COLORADO 80202, US, престао је да важи дана 10.10.2010. године.

Жиг рег. бр. **37232** чији је носилац QWEST COMMUNICATIONS INTERNATIONAL INC.(a Delaware corporation), 1801 CALIFORNIA STREET, SUITE 5100, DENVER ,COLORADO 80202, US, престао је да важи дана 10.10.2010. године.

Жиг рег. бр. **37236** чији је носилац KAO KABUSHIKI KAISHA a/t/a KAO CORPORATION, 14-10 Nihonbashi Kayabacho, 1-chome, Chuo-ku, Tokyo 103, JP, престао је да важи дана 23.10.2010. године.

Жиг рег. бр. **37309** чији је носилац BERNARD CHAUS, INC., 1410 BROADWAY, NEW YORK, NEW YORK, US, престао је да важи дана 5.11.2010. године.

Жиг рег. бр. **37314** чији је носилац ABBA SEAFOOD AB, PACKHUSPLATSEN 3, 411 13 GOTEBORG, SE, престао је да важи дана 15.11.2010. године.

Жиг рег. бр. **37375** чији је носилац "VITAL" A.D. Fabrika ulja i biljnih masti Vrbas, Ul. Maršala Tita 1, 21460 Vrbas, RS, престао је да важи дана 22.10.2010. године.

Жиг рег. бр. **37400** чији је носилац HOWARD FOUNDATION (HOLDINGS) LIMITED, GRAND VIEW, NORTH RIGTON, LEEDS LS 17 0DW, GB, престао је да важи дана 11.10.2010. године.

Жиг рег. бр. **37410** чији је носилац "VITAL" A.D. Fabrika ulja i biljnih masti Vrbas, Ul. Maršala Tita 1, 21460 Vrbas, RS, престао је да важи дана 22.10.2010. године.

Жиг рег. бр. **37411** чији је носилац "VITAL" A.D. Fabrika ulja i biljnih masti Vrbas, Ul. Maršala Tita 1, 21460 Vrbas, RS, престао је да важи дана 22.10.2010. године.

Жиг рег. бр. **37412** чији је носилац "VITAL" A.D. Fabrika ulja i biljnih masti Vrbas, Ul. Maršala Tita 1, 21460 Vrbas, RS, престао је да важи дана 22.10.2010. године.

Жиг рег. бр. **37413** чији је носилац "VITAL" A.D. Fabrika ulja i biljnih masti Vrbas, Ul. Maršala Tita 1, 21460 Vrbas, RS, престао је да важи дана 22.10.2010. године.

Жиг рег. бр. **37415** чији је носилац ExxonMobil Oil Corporation, 5959 Las Colinas Boulevard, Irving, TX 75039-2298, US, престао је да важи дана 30.10.2010. године.

Жиг рег. бр. **37416** чији је носилац ExxonMobil Oil Corporation, 5959 Las Colinas Boulevard, Irving, TX 75039-2298, US, престао је да важи дана 30.10.2010. године.

Жиг рег. бр. **37417** чији је носилац MARS, INC., 6885 Elm Street, McLean, Virginia 22101-3883, US, престао је да важи дана 31.10.2010. године.

Жиг рег. бр. **37418** чији је носилац MARS DRINKS UK LIMITED, 3D Dundee Road, Slough, Berkshire, SL1 4LG, England, UK, престао је да важи дана 31.10.2010. године.

Жиг рег. бр. **37420** чији је носилац E.I. DU PONT DE NEMOURS AND COMPANY, 1007 Market Street, Wilmington, Delaware 19898, US, престао је да важи дана 31.10.2010. године.

Жиг рег. бр. **37466** чији је носилац AD PIVARA" PANČEVO", STEVANA ŠUPLJIKCA BB, PANČEVO, RS, престао је да важи дана 2.11.2010. године.

Жиг рег. бр. **37467** чији је носилац UNITED FEATURE SYNDICATE INC., 200 MADISON AVENUE, 4th FLOOR, NEW YORK, NEW YORK 10016, US, престао је да важи дана 9.11.2010. године.

Жиг рег. бр**. 37490** чији је носилац WOLVERINE WORLD WIDE, INC., 9341 COURTLAND DRIVE, N.E. ROCKFORD, MICHIGAN 49351, US, престао је да важи дана 17.10.2010. године.

Жиг рег. бр. **37515** чији је носилац HI ZORKA, DP FARMACIJA, MEDICINSKI SEKTOR, NOVI

BEOGRAD, GOCE DELČEVA 44, RS, престао је да важи дана 12.10.2010. године.

Жиг рег. бр. **37613** чији је носилац HENKEL CORPORATION, THE TRIAD, 2200 RENAISSANCE BLVD. GULPH MILLS, PENNSYLVANIA 19406, US престао је да важи дана 12.10.2010. године.

Жиг рег. бр. **37748** чији је носилац GEOFFREY, LLC, One Geoffrey Way, Wayne, New Jersey 07470, US, престао је да важи дана 12.10.2010. године.

Жиг рег. бр. **37768** чији је носилац ALTICOR INC., 7575 EAST FULTON ROAD, ADA, MICHIGAN 49355, US, престао је да важи дана 5.11.2010. године.

Жиг рег. бр. **38015** чији је носилац MARS INCORPORATED, 6885 ELM STREET, McLEAN-VIRGINIA 22101-3883, US, престао је да важи дана 19.10.2010. године.

Жиг рег. бр. **38018** чији је носилац GE HEALTHCARE AS, Nycoveien 2, N-0485 Oslo 4, NO, престао је да важи дана 25.10.2010. године.

Жиг рег. бр. **38019** чији је носилац MARS INC., 6885 ELM STREET, McLEAN-VIRGINIA 22101-3883, US, престао је да важи дана 30.10.2010. године.

Жиг рег. бр. **38023** чији је носилац MARS INC., 6885 ELM STREET, McLEAN-VIRGINIA 22101-3883, US, престао је да важи дана 30.10.2010. године.

Жиг рег. бр. **38095** чији је носилац AMWAY CORPORATION, 7575 EAST FULTON ROAD, ADA, MICHIGAN 49355, US, престао је да важи дана 5.11.2010. године.

Жиг рег. бр. **38097** чији је носилац S. DYRUP & CO. A/S, GLADSAXEVEJ 300 DK-2860 SOBORG, DK, престао је да важи дана 15.11.2010. године.

Жиг рег. бр. **41063** чији је носилац AERO, KEMIČNA, GRAFIČNA IN PAPIRNA INDUSTRIJA, D.D., CELJE, IPAVČEVA 20, SI, престао је да важи дана 30.10.2010. године.

Жиг рег. бр. **43614** чији је носилац HEMOFARM KONCERN, A.D. FARMACEUTSKO-HEMIJSKA INDUSTRIJA, Beogradski put bb, 26300 Vršac, RS, престао је да важи дана 2.11.2010. године.

Жиг рег. бр. **43724** чији је носилац P.P. PECONI, D.O.O., Narodnih heroja 5, 11070 Novi Beograd, RS, престао је да важи дана 14.11.2010. године.

Жиг рег. бр. **43785** чији је носилац HEMOFARM KONCERN, FARMACEUTSKO-HEMIJSKA INDUSTRIJA, Beogradski put bb, 26300 Vršac, RS, престао је да важи дана 2.11.2010. године.

Жиг рег. бр. **43908** чији је носилац PLIVA D.D., Ulica grada Vukovara 49, 10000 Zagreb, HR, престао је да важи дана 24.11.2010. године.

Жиг рег. бр. **43917** чији је носилац SmithKline Beecham plc., 980 Great West Road, Brentford, Middlesex TW8 9GS , GB, престао је да важи дана 8.11.2010. године.

Жиг рег. бр. **45956** чији је носилац KTITOR D.O.O. PREDUZEĆE ZA PROIZVODNJU, GRADJEVINARSTVO, TRGOVINU, UGOSTITELJSTVO, TURIZAM, PROMET I PRUŽANJE USLUGA U ZEMLJI I INISTRANSTVU, 29. novembra 68c, Beograd, RS, престао је да важи дана 12.10.2010. године.

Жиг рег. бр. 45997 чији је носилац HUNTSMAN ICI CHEMICALS, LLC, 500 Huntsman Way, Salt Lake City, Utah 84108, US, престао је да важи дана 9.10.2010. године.

Жиг рег. бр. **46000** чији је носилац KOWA COMPANY LTD, 6-29, Nishiki 3-chome, Naka-ku, Nagoya, Japan, JP, престао је да важи дана 19.10.2010. године.

Жиг рег. бр. **46002** чији је носилац "HOT LINE R" Proizvodno-trgovačka i komisiona radnja, Nenad Cvetković preduzetnik, Gadžin Han, selo Gornji Barbeš, RS, престао је да важи дана 19.10.2010. године.

Жиг рег. бр. **46013** чији је носилац Preduzeće za proizvodnju čokolade, bombona i peciva "PIONIR" d.o.o., Beograd, Požeška 65/b, RS, престао је да важи дана 13.10.2010. године.

Жиг рег. бр. **46014** чији је носилац Preduzeće za proizvodnju čokolade, bombona i peciva "PIONIR" d.o.o., Beograd, Požeška 65/b, RS, престао је да важи дана 13.10.2010. године.

Жиг рег. бр. **46017** чији је носилац PHARMACIA & UPJOHN COMPANY LLC, 100 Route 206 North, Peapack, NJ 07977, USA, US, престао је да важи дана 12.10.2010. године.

Жиг рег. бр. **46018** чији је носилац PHARMACIA & UPJOHN COMPANY LLC, 100 Route 206 North, Peapack, NJ 07977, USA, US, престао је да важи дана 23.10.2010. године.

Жиг рег. бр. **46019** чији је носилац PHARMACIA & UPJOHN COMPANY LLC, 100 Route 206 North, Peapack, NJ 07977, USA, US, престао је да важи дана 23.10.2010. године.

Жиг рег. бр. **46022** чији је носилац SmithKline Beecham Limited, 980 Great West Road, Brentford, Middlesex TW8 9GS, GB, престао је да важи дана 18.10.2010. године.

Жиг рег. бр. **46043** чији је носилац ASTRAZENECA AB, Vastra Malarehamnen 9, S-151 85 Sodertalje, Švedska, SE, престао је да важи дана 17.10.2010. године.

Жиг рег. бр. **46082** чији је носилац 14. OKTOBAR AD, INDUSTRIJA MAŠINA I KOMPONENATA, 14 oktobra 2, Kruševac, RS, престао је да важи дана 24.10.2010. године.

Жиг рег. бр. **46123** чији је носилац MARS, INCORPORATED, 6885 Elm Street, McLean, Virginia 22101-3883, US, престао је да важи дана 13.10.2010. године.

Жиг рег. бр. **46140** чији је носилац BELUPO - Lijekovi i kozmetika, d.d., Danica 5, 48000 Koprivnica, HR, престао је да важи дана 31.10.2010. године.

Жиг рег. бр. **46141** чији је носилац BELUPO - Lijekovi i kozmetika, d.d., Danica 5, 48000 Koprivnica, HR, престао је да важи дана 31.10.2010. године.

Жиг рег. бр. **46142** чији је носилац BELUPO - Lijekovi i kozmetika, d.d., Danica 5, 48000 Koprivnica, HR, престао је да важи дана 31.10.2010. године.

Жиг рег. бр. **46143** чији је носилац Izdavačko društvo "RINGIER" d.o.o., Kraljice Marije br. 1, 11120 Beograd, RS, престао је да важи дана 26.10.2010. године.

Жиг рег. бр. **46144** чији је носилац BLIC PRESS D.O.O., IZDAVAČKO PREDUZEĆE, Masarikova 5, Beograd, YU, престао је да важи дана 26.10.2010. године.

Жиг рег. бр. **46148** чији је носилац BELUPO - Lijekovi i kozmetika, d.d., Danica 5, 48000 Koprivnica, HR, престао је да важи дана 31.10.2010. године.

Жиг рег. бр. **46149** чији је носилац BELUPO - Lijekovi i kozmetika, d.d., Danica 5, 48000 Koprivnica, HR, престао је да важи дана 31.10.2010. године.

Жиг рег. бр. **46157** чији је носилац WM. WRIGLEY JR. COMPANY, 410 North Michigan Avenue, Chicago, Illinois 60611, US, престао је да важи дана 27.10.2010. године.

Жиг рег. бр. **46168** чији је носилац SENSORMATIC ELECTRONICS CORPORATION, 6600 CONGRESS AVENUE,BOCA RATON, FLORIDA 33487, US, престао је да важи дана 25.10.2010. године.

Жиг рег. бр. **46170** чији је носилац SCHERING-PLOUGH LTD., Toepferstrasse 5, CH-6004 Lucerne, CH, престао је да важи дана 26.10.2010. године.

Жиг рег. бр. **46171** чији је носилац MARS, INCORPORATED, 6885 Elm Street, McLean, Virginia 22101-3883, US, престао је да важи дана 27.10.2010. године.

Жиг рег. бр. **46172** чији је носилац THE PROCTER & GAMBLE COMPANY, One Procter & Gamble Plaza, Cincinnati, Ohio, US, престао је да важи дана 27.10.2010. године.

Жиг рег. бр. **46187** чији је носилац 3 AMIGOS, D.O.O., PREDUZEĆE ZA UNUTRAŠNJU I SPOLJNU TRGOVINU, Vase Pelagića 54, Beograd, YU, престао је да важи дана 15.11.2010. године.

Жиг рег. бр. **46189** чији је носилац WYETH, FIVE GIRALDA FARMS,MADISON,NEW JERSEY 07940, US, престао је да важи дана 15.11.2010. године.

Жиг рег. бр. **46190** чији је носилац GE HEALTHCARE LIMITED, Amersham Place, Little Chalfont, Buckinghamshire, HP7 9NA England, GB, престао је да важи дана 15.11.2010. године.

Жиг рег. бр. **46191** чији је носилац RECKITT & COLMAN (OVERSEAS) LIMITED, DANSOM LANE HULL, HU8 7DS, VELIKA BRITANIJA, GB, престао је да важи дана 7.11.2010. године.

Жиг рег. бр. **46193** чији је носилац SmithKline Beecham Limited, 980 Great West Road, Brentford, Middlesex TW8 9GS, GB, престао је да важи дана 8.11.2010. године.

Жиг рег. бр. **46194** чији је носилац SmithKline Beecham Limited, 980 Great West Road, Brentford, Middlesex TW8 9GS, GB, престао је да важи дана 8.11.2010. године.

Жиг рег. бр. **46196** чији је носилац UNILEVER N.V., Weena 455, 3013 AL Rotterdam, NL, престао је да важи дана 6.11.2010. године.

Жиг рег. бр. **46198** чији је носилац Danisco US Inc. a Delaware corporation, 925 Page Mill Road, Palo Alto, California 94304, US, престао је да важи дана 1.11.2010. године.

Жиг рег. бр**. 46201** чији је носилац HEMOFARM KONCERN,-FARMACEUTSKO-HEMIJSKA INDUSTRIJA VRŠAC,, Beogradski put bb, 26300 Vršac, RS, престао је да важи дана 16.11.2010. године.

Жиг рег. бр. **46204** чији је носилац Citizen Holdings Kabushiki Kaisha (Citizen Holdings Co., Ltd.), 1-12, 6-chome, Tanashi-cho, Nishi-tokyo-shi, Tokyo, JP престао је да важи дана 10.11.2010. године.

Жиг рег. бр. **46205** чији је носилац SZR TOPOHEMIJA, VLASNIK BORISAVLJEVIĆ NIKOLA, P.f. 17, 34310 Topola, YU, престао је да важи дана 16.11.2010. године.

Жиг рег. бр. **46212** чији је носилац PHILIP MORRIS PRODUCTS S.A., Quai Jeanrenaud 3, CH-2000 Neuchatel, Switzerland, CH, престао је да важи дана 3.11.2010. године.

Жиг рег. бр. **46213** чији је носилац BELUPO - Lijekovi i kozmetika, d.d., Danica 5, 48000 Koprivnica, Republika Hrvatska, HR, престао је да важи дана 28.11.2010. године.

Жиг рег. бр. **46214** чији је носилац BELUPO - Lijekovi i kozmetika, d.d., Danica 5, 48000 Koprivnica, Republika Hrvatska, HR, престао је да важи дана 28.11.2010. године.

Жиг рег. бр. **46215** чији је носилац BELUPO - Lijekovi i kozmetika, d.d., Danica 5, 48000 Koprivnica, Republika Hrvatska, HR, престао је да важи дана 28.11.2010. године.

Жиг рег. бр. **46220** чији је носилац AGROFRESH INC., 100 Independence Mall West, Philadelphia, PA 19106-2399, US, престао је да важи дана 1.12.2010. године.

Жиг рег. бр. **46256** чији је носилац DaimlerChrysler AG, 70546 Stuttgart, Немачка, DE, престао је да важи дана 31.10.2010. године.

Жиг рег. бр. **46270** чији је носилац MERCK & CO., INC. a New Jersey Corporation, One Merck Drive, P.O.Box 100, Whitehouse Station, New Jersey, US, престао је да важи дана 11.10.2010. године.

Жиг рег. бр. **46272** чији је носилац BLIC PRESS D.O.O., IZDAVAČKO PREDUZEĆE, Masarikova 5, Beograd, RS, престао је да важи дана 24.10.2010. године.

Жиг рег. бр. **46273** чији је носилац BLIC PRESS D.O.O., IZDAVAČKO PREDUZEĆE, Masarikova 5, Beograd, YU, престао је да важи дана 24.10.2010. године.

Жиг рег. бр. **46278** чији је носилац PLIVA D.D., Ulica grada Vukovara 49, 10000 Zagreb, HR, престао је да важи дана 24.11.2010. године.

Жиг рег. бр. **46280** чији је носилац BELUPO, lijekovi i kozmetika, d.o.o., Danica 5, 48000 Koprivnica, Republika Hrvatska, HR, престао је да важи дана 28.11.2010. године.

Жиг рег. бр. **46300** чији је носилац HEMIJA IMPEX D.O.O. ZA TRGOVINU I USLUGE, Dalmatinska 22, 21000 Novi Sad, RS, престао је да важи дана 30.10.2010. године.

Жиг рег. бр. **46301** чији је носилац PLIVA D.D., Ulica grada Vukovara 49, 10000 Zagreb, HR, престао је да важи дана 24.11.2010. године.

Жиг рег. бр. **46303** чији је носилац BUTIK ZA DECU MIRJANA, SKTR, OSNIVAČ PETROVIĆ NIKOLA, Glavna 36, 11080 Zemun, YU, престао је да важи дана 17.11.2010. године.

Жиг рег. бр**. 46304** чији је носилац DATAPLAY, INC. a Delaware Corporation, 6200 Lookout Road, Boulder, Colorado 80301, US, престао је да важи дана 23.11.2010. године.

Жиг рег. бр. **46305** чији је носилац PLIVA D.D., Ulica grada Vukovara 49, 10000 Zagreb, HR, престао је да важи дана 24.11.2010. године.

Жиг рег. бр. **46307** чији је носилац PLIVA D.D., Ulica grada Vukovara 49, 10000 Zagreb, HR, престао је да важи дана 24.11.2010. године.

Жиг рег. бр. **46309** чији је носилац PLIVA D.D., Ulica grada Vukovara 49, 10000 Zagreb, HR, престао је да важи дана 24.11.2010. године.

Жиг рег. бр**. 46311** чији је носилац PLIVA D.D., Ulica grada Vukovara 49, 10000 Zagreb, HR, престао је да важи дана 24.11.2010. године.

Жиг рег. бр. **46312** чији је носилац PLIVA D.D., Ulica grada Vukovara 49, 10000 Zagreb, HR, престао је да важи дана 24.11.2010. године.

Жиг рег. бр. **46316** чији је носилац PLIVA D.D., Ulica grada Vukovara 49, 10000 Zagreb, HR, престао је да важи дана 24.11.2010. године.

Жиг рег. бр. **46317** чији је носилац PLIVA D.D., Ulica grada Vukovara 49, 10000 Zagreb, HR, престао је да важи дана 24.11.2010. године.

Жиг рег. бр. **46318** чији је носилац PLIVA D.D., Ulica grada Vukovara 49, 10000 Zagreb, HR, престао је да важи дана 24.11.2010. године.

Жиг рег. бр. **46319** чији је носилац UDRUŽENJE BANAKA I DRUGIH FINANSIJSKIH ORGANIZACIJA JUGOSLAVIJE, Bulevar revolucije 86, Beograd, YU, престао је да важи дана 31.10.2010. године.

Жиг рег. бр. **46321** чији је носилац PLIVA D.D., Ulica grada Vukovara 49, 10000 Zagreb, HR, престао је да важи дана 24.11.2010. године.

Жиг рег. бр. **46322** чији је носилац PLIVA D.D., Ulica grada Vukovara 49, 10000 Zagreb, HR, престао је да важи дана 24.11.2010. године.

Жиг рег. бр. **46359** чији је носилац MOLSON CANADA 2005, 33 Carlingview Drive, Toronto, Ontario, Canada M9W 5E4, CA, престао је да важи дана 9.10.2010. године.

Жиг рег. бр. **46393** чији је носилац CEDEVITA D.O.O., Planinska bb, 10000 Zagreb, HR, престао је да важи дана 24.11.2010. године.

Жиг рег. бр. **46397** чији је носилац PLIVA D.D., Ulica grada Vukovara 49, 10000 Zagreb, HR, престао је да важи дана 24.11.2010. године.

Жиг рег. бр. **46398** чији је носилац PLIVA D.D., Ulica grada Vukovara 49, 10000 Zagreb, HR, престао је да важи дана 24.11.2010. године.

Жиг рег. бр. **46404** чији је носилац PLIVA D.D., Ulica grada Vukovara 49, 10000 Zagreb, HR, престао је да важи дана 24.11.2010. године.

Жиг рег. бр. **46423** чији је носилац MARS, INCORPORATED, 6885 ELM STREET MCLEAN VIRGINIA 22101-3883, US, престао је да важи дана 23.11.2010. године.

Жиг рег. бр. **46425** чији је носилац ACTERNA LLC, 20410 Observation Drive, Germantown, Maryland 20876, US, престао је да важи дана 24.11.2010. године.

Жиг рег. бр. **46426** чији је носилац GE HEALTHCARE LIMITED, Amersham Place, Little Chalfont, Buckinghamshire, HP7 9NA England, GB, престао је да важи дана 25.10.2010. године.

Жиг рег. бр. **46427** чији је носилац INTEGRAL V, D.O.O. ZA PROIZVODNJU, TRGOVINU I USLUGE, Aleksandra Stambolijskog 13a, 11000 Beograd, YU, престао је да важи дана 13.10.2010. године.

Жиг рег. бр. **46433** чији је носилац MIH INTELPROP HOLDINGS LIMITED, 3rd Floor, Les Cascades, Edith Cavell Street, Port Louis, MU, престао је да важи дана 28.11.2010. године.

Жиг рег. бр. **46532** чији је носилац VLANI, PREDUZEĆE ZE PROIZVODNJU I PROMET SA PO., Zmaj Jovina 39, 81000 Podgorica, YU, престао је да важи дана 26.10.2010. године.

Жиг рег. бр. **46533** чији је носилац UNI-CHEM D.O.O., Žanke Stokić 14, Beograd, RS, престао је да важи дана 22.11.2010. године.

Жиг рег. бр. **46539** чији је носилац INTEGRAL V, D.O.O. ZA PROIZVODNJU, TRGOVINU I USLUGE, Aleksandra Stambolijskog 13a, 11000 Beograd, RS, престао је да важи дана 13.10.2010. године.

Жиг рег. бр. **46630** чији је носилац Syngenta Participations AG, CH-4002 BASEL, CH, престао је да важи дана 27.11.2010. године.

Жиг рег. бр. **46636** чији је носилац PLIVA D.D., Ulica grada Vukovara 49, 10000 Zagreb, HR, престао је да важи дана 24.11.2010. године.

Жиг рег. бр. **46637** чији је носилац PLIVA D.D., Ulica grada Vukovara 49, 10000 Zagreb, HR, престао је да важи дана 24.11.2010. године.

Жиг рег. бр. **46680** чији је носилац THE COLOMER GROUP SPAIN, S.L., Aragon, 499, 08013 Barcelona, ES, престао је да важи дана 4.12.2010. године.

Жиг рег. бр. **47411** чији је носилац PORTO MALTESE LIMITED, 222 Merchant Street, VALLETTE, VLT 10, MALTA, MT, престао је да важи дана 13.11.2010. године.

Жиг рег. бр. **48089** чији је носилац "CHS" d.o.o., Savski nasip 7, Beograd, RS, престао је да важи дана 3.11.2010. године.

Жиг рег. бр. **58810** чији је носилац CONTO BENE JEANS d.o.o., Mihaila Pupina bb, Novi Pazar, RS престао је да важи дана 9.10.2010. године.

Објава информација о међународно регистрованим жиговима за које је затражено признање у Републици Србији

Gazzete OMPI des marques internationales
WIPO Gazette of International Marks

Број 10/2011 - 18/2011 (2011-03-31 – 2011-05-26)

1. Registracije (Registrations)

(111) 1068812
(151) 27.12.2010.
(540)

LENX

(732) LENKS, d.o.o.
(511) 06 09 11 37 42

(111) 1068818
(151) 31.01.2011.
(540)

TOBI

(732) NOVARTIS AG
(511) 05

(111) 1068819
(151) 02.02.2011.
(540)

HYFLEX

(732) Coltène/Whaledent AG
(511) 10

(111) 1068832
(151) 11.01.2011.
(540)

GRAEF

(732) Gebr. Graef GmbH & Co. KG
(511) 07 08 09 11

(111) 1068838
(151) 13.01.2011.
(540)

PRIVATE WELLNESS

(732) GESSI S.P.A.
(511) 11 20 21

(111) 1068839
(151) 13.01.2011.
(540)

ISPA

(732) GESSI S.P.A.
(511) 11 20 21

(111) 1068840
(151) 26.01.2011.
(540)

PEYONA

(732) CHIESI FARMACEUTICI S.P.A.
(511) 05

(111) 1068841
(151) 03.01.2011.
(540)

LKW WALTER GREEN transport

(732) LKW Walter Internationale Transportorganisation AG
(511) 12 36 39

(111) 1068845
(151) 17.11.2010.
(540)

DR.TORK LABORATORIES

(732) UNITERS S.p.A.
(511) 02 03 37

(111) 1068847
(151) 18.11.2010.
(540)

BERLAC GROUP

(732) Berlac AG
(511) 01 02 03

(111) 1068856
(151) 24.01.2011.
(540)

(732) FERRERO S.P.A.
(511) 30

(111) 1068864
(151) 20.01.2011.
(540)

WORLD'S NATURAL STRONGMAN FEDERATION W.N.S.F.

(732) László FEKETE
(511) 41

(111) 1068868
(151) 17.06.2010.
(540)

CESELSAN

(732) CESELSAN MAKİNA SANAYİ VE TİCARET ANONİM ŞİRKETİ
(511) 06 07 11 12 35 37

(111) 1068871
(151) 01.12.2010.
(540)

(732) DANIELI & C. OFFICINE MECCANICHE S.P.A.
(511) 06 07 09 11 37 42

(111) 1068872
(151) 05.01.2011.
(540)

POMPAR FRITS

(732) Intersnack Group GmbH & Co. KG
(511) 29 30 31

(111) 1068874
(151) 05.01.2011.
(540)

Hangover

(732) Intersnack Group GmbH & Co. KG
(511) 29 30 31

(111) 1068892
(151) 20.07.2010.
(540)

MARLES

(732) MARLES d.d.
(511) 06 19 35 37 40 42

(111) 1068894
(151) 05.08.2010.
(540)

ERGO

(732) ERGO Versicherungsgruppe AG
(511) 35 36 42 44 45

(111) 1068896
(151) 19.10.2010.
(540)

CHATEAU AMORE

(732) Bravo Premium LLC
(511) 32 33

(111) 1068901
(151) 15.10.2010.
(540)

DINAVIL
Polivinil-klorid PVC
Polyvinyl-chloride PVC

(732) DINA-Petrokemija d.d. proizvodnja, terminali i servisi
(511) 01

(111) 1068913
(151) 12.11.2010.
(540)

WHITE KEY

(732) DUNSMUR HOLDINGS LIMITED
(511) 33

(111) 1068927
(151) 14.01.2011.
(540)

THE LIMITED

(732) Limited Stores, LLC
(511) 03 09 14 18 25 26 35

(111) 1068939
(151) 17.12.2010.
(540)

Chio Natura

(732) Intersnack Group GmbH & Co. KG
(511) 29 30 31

(111) 1068942
(151) 26.01.2011.
(540)

STORWIZE

(732) International Business Machines Corporation
(511) 09 16 42

(111) 1068954
(151) 21.01.2011.
(540)

L'OREAL PARIS
INOA

(732) L'OREAL
(511) 03

(111) 1068956
(151) 21.01.2011.
(540)

MISS DIOR CHERIE COEUR DE PARFUM

(732) PARFUMS CHRISTIAN DIOR
(511) 03

(111) 1068970
(151) 14.01.2011.
(540)

fat

(732) "FAT" EOOD
(511) 06 11 20

(111) 1068997
(151) 17.02.2011.
(540)

ILLEGAL LENGTHS

(732) L'OREAL
(511) 03

(111) 1068998
(151) 20.01.2011.
(540)

(732) Obschestvo s ogranichennoy otvetstvennostiyu "FERON"
(511) 05

(111) 1069003
(151) 15.02.2011.
(540)

TROPICOOL

(732) Société des Produits Nestlé S.A.
(511) 29 30

(111) 1069011
(151) 04.02.2011.
(540)

tic tac WOW

(732) SOREMARTEC SA
(511) 05 30

(111) 1069016
(151) 06.12.2010.
(540)

KOROY

(732) KORLOY INC.
(511) 07

(111) 1069039
(151) 14.09.2010.
(540)

MUSIC LEGENDS

(732) s.Oliver Bernd Freier GmbH & Co. KG
(511) 09 14 18 25

(111) 1069040
(151) 04.11.2010.
(540)

(732) MEGGLE AG
(511) 05 29 30 32

(111) 1069056
(151) 24.09.2010.
(540)

LASSA

(732) BRISA BRIDGESTONE SABANCI LASTIK SANAYI VE TICARET ANONIM SIRKETI
(511) 12 35

(111) 1069064
(151) 17.11.2010.
(540)

RESUME

(732) Celgene Corporation
(511) 42

(111) 1069068
(151) 05.11.2010.
(540)

TROVIS SOLUTION

(732) SAMSON AG
(511) 09 42

(111) 1069069
(151) 08.11.2010.
(540)

(732) EMP merchandising Handels GmbH
(511) 09 16 25 35 38 41 42

(111) 1069088
(151) 09.12.2010.
(540)

Ackermann

(732) Finka Jevtic
(511) 23

(111) 1069102
(151) 24.01.2011.
(540)

CEPEX

(732) FLUIDRA COMMERCIAL, S.A.U.
(511) 02 35

(111) 1069105
(151) 30.12.2010.
(540)

(732) BIG & CHIC S.R.L.
(511) 03 09 18 21 24 25 30

(111) 1069127
(151) 08.02.2011.
(540)

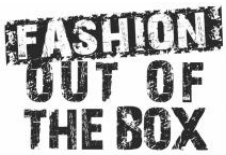

(732) Deichmann SE
(511) 18 25

(111) 1069136
(151) 19.01.2011.
(540)

MOKKA

(732) Opel Eisenach GmbH
(511) 12 27 28

(111) 1069139
(151) 07.01.2011.
(540)

DIAXELOR

(732) BIOFARMA
(511) 05

(111) 1069159
(151) 01.02.2011.
(540)

RIDUTRIN

(732) EGIS GYÓGYSZERGYÁR Nyilvánosan Működő Részvénytársaság
(511) 05

(111) 1069164
(151) 07.12.2010.
(540)

FUTURE MILL

(732) KORLOY INC.
(511) 07

(111) 1069166
(151) 08.12.2010.
(540)

(732) KORLOY INC.
(511) 07

(111) 1069167
(151) 09.12.2010.
(540)

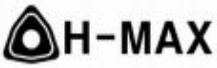

(732) KORLOY INC.
(511) 07

(111) 1069168
(151) 10.12.2010.
(540)

PROA–MILL

(732) KORLOY INC.
(511) 07

(111) 1069169
(151) 06.12.2010.
(540)

KOLOY

(732) KORLOY INC.
(511) 07

(111) 1069170
(151) 07.12.2010.
(540)

(732) KORLOY INC.
(511) 07

(111) 1069171
(151) 08.12.2010.
(540)

HRMD

(732) KORLOY INC.
(511) 07

(111) 1069179
(151) 10.01.2011.
(540)

(732) FLUIDRA COMMERCIAL, S.A.U.
(511) 07 09 19 42

(111) 1069180
(151) 10.01.2011.
(540)

ASTRALPOOL

(732) FLUIDRA COMMERCIAL, S.A.U.
(511) 01 06 11 37

(111) 1069195
(151) 12.11.2010.
(540)

(732) GUANGZHOU AUTOMOBILE GROUP CO., LTD.
(511) 07 12 37

(111) 1069206
(151) 06.07.2010.
(540)

(732) Lohmann Animal Health GmbH & Co. KG
(511) 05 31

(111) 1069210
(151) 28.01.2011.
(540)

(732) Sazoeva, Marina
(511) 09 35 37 39

(111) 1069212
(151) 12.04.2010.
(540)

VIVA BURGER

(732) OMV Refining & Marketing GmbH
(511) 16 25 29 30

(111) 1069217
(151) 02.03.2011.
(540)

ASSAULT

(732) Hansen Beverage Company
(511) 05 32

(111) 1069225
(151) 12.08.2010.
(540)

FOR THE BREATH OF CONFIDENCE

(732) Periproducts Limited
(511) 03

(111) 1069258
(151) 25.11.2010.
(540)

CHICOFFEE

(732) KAUFLAND ČESKÁ REPUBLIKA, v.o.s.
(511) 29 30 32

(111) 1069262
(151) 16.12.2010.
(540)

(732) SANOFI-AVENTIS
(511) 05 16 35 38 41 44

(111) 1069263
(151) 16.12.2010.
(540)

(732) SANOFI-AVENTIS
(511) 05 16 35 38 41 44

(111) 1069267
(151) 17.12.2010.
(540)

Felix

(732) Intersnack Group GmbH & Co. KG
(511) 29 30 31

(111) 1069282
(151) 18.01.2011.
(540)

LOCLIFE SERVICES

(732) ALSTOM Transport SA
(511) 09 12 37 39

(111) 1069283
(151) 01.02.2011.
(540)

Speeder

(732) SPEEDMINTON GmbH
(511) 28

(111) 1069284
(151) 01.02.2011.
(540)

CHICCO PURE.BIO

(732) ARTSANA S.p.A
(511) 03 05

(111) 1069286
(151) 01.02.2011.
(540)

(732) GENERALE BISCUIT - GLICO FRANCE
(511) 30

(111) 1069317
(151) 17.12.2010.
(540)

(732) EUROVENTILATORI INTERNATIONAL SPA
(511) 07 11 35

(111) 1069320
(151) 09.11.2010.
(540)

BLUEGEN

(732) MTD PRODUCTS AG
(511) 07 12

(111) 1069322
(151) 10.02.2011.
(540)

ELS

(732) ELS Educational Services, Inc.
(511) 16 41

(111) 1069331
(151) 07.01.2011.
(540)

(732) Hilding Anders International AB
(511) 20 24 35

(111) 1069336
(151) 23.02.2011.
(540)

COLLAGE

(732) Du Pont de Nemours International S.A.
(511) 05

(111) 1069338
(151) 10.02.2011.
(540)

AGUILA

(732) Société des Produits Nestlé S.A.
(511) 11

(111) 1069345
(151) 10.02.2011.
(540)

Payen

(732) Federal-Mogul Sealing Systems Limited
(511) 06 07 17

(111) 1069348
(151) 29.04.2010.
(540)

(732) ÖZEN METAL SANAYİ VE TİCARET LİMİTED ŞİRKETİ
(511) 06 20

(111) 1069352
(151) 12.10.2010.
(540)

(732) CYBERGUN
(511) 01 04 08 09 13 18 25 28 29 30 32 33

(111) 1069353
(151) 07.10.2010.
(540)

Mirodenia

(732) DF World of Spices GmbH
(511) 29 30

(111) 1069369
(151) 24.01.2011.
(540)

(732) Kaufland Warenhandel GmbH & Co. KG
(511) 29 30 32

(111) 1069374
(151) 30.12.2010.
(540)

JUST DIFFERENT

(732) HUGO BOSS Trade Mark Management GmbH & Co. KG
(511) 03

(111) 1069378
(151) 09.02.2011.
(540)

(732) Kraft Foods Global Brands LLC
(511) 29 30

(111) 1069379
(151) 22.02.2011.
(540)

(732) SICHUAN HUAJING GUOMAO INDUSTRIAL CO., LTD.
(511) 09

(111) 1069390
(151) 28.12.2010.
(540)

HF

(732) Sopro Bauchemie GmbH
(511) 01 17 19

(111) 1069421
(151) 09.11.2010.
(540)

BLUE GENERATION

(732) MTD PRODUCTS AG
(511) 07 12

(111) 1069447
(151) 04.10.2010.
(540)

IPS E.MAX CAD ON

(732) Ivoclar Vivadent AG
(511) 05 10

(111) 1069454
(151) 24.11.2010.
(540)

(732) ARNOLDO MONDADORI EDITORE SPA
(511) 03 09 16 25 35 38 41

(111) 1069457
(151) 04.01.2011.
(540)

(732) Zhejiang Chengyang Machine & Electric Co., Ltd
(511) 07 08 12

(111) 1069463
(151) 23.12.2010.
(540)

(732) VIENNA INSURANCE GROUP AG Wiener Versichering Gruppe
(511) 36

(111) 1069470
(151) 03.01.2011.

(540)

navington

(732) "DELTIM" MACHURA, MACHURA spółka jawna
(511) 12 18 20

(111) 1069482
(151) 22.02.2011.
(540)

HOMEPARTY

(732) JIANGMEN KINWAI FURNITURE & DECORATION CO., LTD.
(511) 35

(111) 1069494
(151) 23.02.2011.
(540)

lightree

(732) Siemens Aktiengesellschaft
(511) 12

(111) 1038688
(151) 09.04.2010.
(540)

CleCle

(732) TOP SHOP INTERNATIONAL SA
(511) 25 35 41

(111) 1069498
(151) 01.10.2010.
(540)

AMPHIBIOX

(732) GEOX S.P.A.
(511) 09 18 24 25

(111) 1069516
(151) 02.12.2010.
(540)

BonaCera

(732) casywalker EUROPE AG
(511) 08 21

(111) 1069534
(151) 09.12.2010.
(540)

YOBALEX

(732) Bayer Aktiengesellschaft
(511) 05 29 30

(111) 1069541
(151) 10.12.2010.
(540)

STUBURT

(732) World Wide Golf Brands Holdings Limited
(511) 28

(111) 1069549
(151) 25.01.2011.
(540)

TERREMARK

(732) Terremark Trademark Holdings, Inc.
(511) 38 42 45

(111) 1069553
(151) 20.01.2011.
(540)

Happy-Mix Minis

(732) Kaufland Warenhandel GmbH & Co. KG
(511) 29 30 32

(111) 1069560
(151) 28.02.2011.
(540)

TRALENZIS

(732) Ares Trading S.A.
(511) 05

(111) 1069561
(151) 03.02.2011.
(540)

vizrt

(732) VIZRT Switzerland Sàrl
(511) 09 37 41 42

(111) 1069570
(151) 01.12.2010.
(540)

(732) ARES SRL
(511) 09 11

(111) 1069572
(151) 10.11.2010.
(540)

Škoda Go

(732) Škoda Auto a.s.
(511) 12

(111) 1069588
(151) 04.01.2011.
(540)

张大胡子

(732) Zhang Guohua
(511) 29 31

(111) 1069599
(151) 11.01.2011.
(540)

DINAMICO

(732) A.TESTONI S.P.A.
(511) 18 25

(111) 1069606
(151) 09.12.2010.
(540)

HyalOne

(732) FIDIA FARMACEUTICI S.p.A.
(511) 05 10

(111) 1069609
(151) 14.01.2011.
(540)

SkyplexNetE

(732) TELESPAZIO S.P.A.
(511) 09 38 42

(111) 1069620
(151) 01.12.2010.
(540)

MELINERA

(732) Lidl Stiftung & Co. KG
(511) 04 06 09 11 14 16 18 19 20 21 26 27 28 31 34

(111) 1069644
(151) 07.12.2010.
(540)

CERATEC

(732) Liqui - Moly Gesellschaft mit beschränkter Haftung
(511) 04

(111) 1069645
(151) 10.12.2010.
(540)

METRO GROUP

(732) MIP METRO Group Intellectual Property GmbH & Co. KG
(511) 09 16 18 21 25 28 35 36 37 38 39 41 42 43 45

(111) 1069660
(151) 31.12.2010.
(540)

CSF

(732) CSF KUYUMCULUK İTHALAT İHRACAT SANAYİ VE TİCARET LİMİTED ŞİRKETİ
(511) 14

(111) 1069666
(151) 03.02.2011.
(540)

KAZAAR

(732) Société des Produits Nestlé S.A.
(511) 30

(111) 1069680
(151) 10.02.2011.
(540)

JD

(732) JD Sports Fashion plc
(511) 18 25 35

(111) 1069686
(151) 31.01.2011.
(540)

VIDONORM

(732) RICHTER GEDEON NYRT.
(511) 05

(111) 1069698
(151) 31.12.2010.

(540)

(732) IP Cleaning S.p.a.
(511) 07

(111) 1069699
(151) 03.06.2010.
(540)

REVO

(732) Hi-tron USA, LLC
(511) 03 05 09 11

(111) 1069703
(151) 16.12.2010.
(540)

NORTHLAND PROFESSIONAL

(732) NORTHLAND GmbH
(511) 03 09 14 18 20 22 24 25

(111) 1069717
(151) 23.12.2010.
(540)

(732) F.A.C.I.B. di CORTESI & C. S.p.A.
(511) 09 18 25

(111) 1069723
(151) 13.01.2011.
(540)

R6

(732) AUDI AG
(511) 12 28

(111) 1069726
(151) 18.02.2011.
(540)

PARLIAMENT DIAMOND CUT

(732) Philip Morris Brands Sàrl
(511) 34

(111) 1069728
(151) 16.02.2011.
(540)

(732) Philip Morris Brands Sàrl
(511) 34

(111) 1069734
(151) 10.01.2011.
(540)

(732) ADNAN CEYHAN
(511) 03

(111) 1069738
(151) 28.01.2011.
(540)

UNISWISS

(732) MIG Banque SA (MIG Bank Ltd)
(511) 36

(111) 1069762
(151) 01.02.2011.
(540)

(732) VINCENZ WIEDERHOLT GmbH
(511) 06 42

(111) 1069764
(151) 14.02.2011.
(540)

КРЕОН МИНИМИКРОСФЕРЫ

(732) Abbott Products GmbH
(511) 05

(111) 1069769
(151) 24.02.2011.
(540)

DRIVE ALLIANCE

(732) Enterprise Holdings, Inc.
(511) 35

(111) 1069778
(151) 11.10.2010.
(540)

MAXSPORT

(732) MAXSPORT MEDIA d.o.o.
(511) 35 38 41

(111) 1069789
(151) 08.12.2010.
(540)

ALGOCALM

(732) ZENTIVA S.A.
(511) 05

(111) 1069790
(151) 08.12.2010.
(540)

АЛГОКАЛМ

(732) ZENTIVA S.A.
(511) 05

(111) 1069816
(151) 08.02.2011.
(540)

(732) MEGGLE AG
(511) 29 30 32

(111) 1069836
(151) 04.02.2011.
(540)

(732) Beiersdorf AG
(511) 03 05 08

(111) 1069847
(151) 25.02.2011.
(540)

MY WAY!

(732) CHURCH & DWIGHT CO., INC.
(511) 21

(111) 1069870
(151) 17.02.2011.
(540)

TONDA TRANSFORMA

(732) Parmigiani Fleurier SA
(511) 14

(111) 1069888
(151) 17.02.2011.
(540)

(732) Chocoladefabriken Lindt & Sprüngli AG
(511) 30

(111) 1069897
(151) 23.11.2010.
(540)

(732) Kaufland Warenhandel GmbH & Co. KG
(511) 29 30 31

(111) 1069901
(151) 22.12.2010.
(540)

(732) OXY'PHARM
(511) 05 10

(111) 1069916
(151) 15.02.2011.
(540)

DIALIGHT

(732) L'OREAL
(511) 03

(111) 1069918
(151) 15.02.2011.
(540)

DIACTIVATEUR

(732) L'OREAL
(511) 03

(111) 1069919
(151) 15.02.2011.
(540)

SHAPE CONTROL

(732) L'OREAL
(511) 03

(111) 1069926
(151) 07.12.2010.
(540)

UnitersPure

(732) UNITERS S.p.A.
(511) 02 03 37

(111) 1069942
(151) 02.11.2010.
(540)

WEAR THE LACES

(732) Special Olympics, Inc.
(511) 35 36

(111) 1069945
(151) 05.10.2010.
(540)

HARMOMED

(732) Kwizda Holding GmbH
(511) 05

(111) 1069948
(151) 29.11.2010.
(540)

CHANGING VIEWS

(732) Kapsch Aktiengesellschaft
(511) 16 38 41

(111) 1069962
(151) 10.12.2010.
(540)

Kelitha

(732) JOLIDON EXPORT IMPORT SRL
(511) 03 25 35

(111) 1069971
(151) 17.01.2011.
(540)

(732) Omega SA (Omega AG) (Omega Ltd.)
(511) 14

(111) 1069979
(151) 03.02.2011.
(540)

McKINLEY

(732) IIC-INTERSPORT International Corporation GmbH
(511) 03 04 05 06 08 09 11 12 13 18 19 20 21 22 24 25 27 28 39 41

(111) 1069981
(151) 02.02.2011.
(540)

AXXEOS

(732) Axxeva Services AG
(511) 35 41

(111) 1069990
(151) 10.02.2011.
(540)

NOCDURNA

(732) Ferring B.V.
(511) 05

(111) 1070016
(151) 02.02.2011.
(540)

Schwarzkopf Perfect Mousse

(732) Henkel AG & Co. KGaA
(511) 03

(111) 1070021
(151) 25.02.2011.
(540)

MY WAY!

(732) Church & Dwight Co., Inc.
(511) 03

(111) 1070022
(151) 25.02.2011.
(540)

Z3RO

(732) ISYS Technologies, Inc.
(511) 09

(111) 1070035
(151) 25.02.2011.
(540)

SWINGER

(732) Patentanwälte A. Grünecker, H. Kinkeldey, W. Stockmair & Partner
(511) 28

(111) 1070044
(151) 23.12.2010.
(540)

tesa AUTO

(732) tesa SE
(511) 01 06 16 17 19 26

(111) 1070045
(151) 11.10.2010.
(540)

Flexi

(732) ÇİFTÇİLER BİRLİK KAĞITÇILIK HİJYENIK ÜRÜNLER VE YAĞ SANAYİ ANONİM ŞİRKETİ
(511) 05 16 21

(111) 1070053
(151) 29.12.2010.
(540)

BUILDING BETTER CITIES

(732) LAFARGE
(511) 19 35 37 40 41 42

(111) 1070079
(151) 17.09.2010.
(540)

PRIMAROM

(732) OOO "Planeta spetsiy"
(511) 01 29 32

(111) 1070086
(151) 03.12.2010.
(540)

STAL

(732) GÜRMAK AMORTİSÖR OTOMOTİV SANAYİ VE TİCARET ANONİM ŞİRKETİ
(511) 12

(111) 1070104
(151) 08.10.2010.
(540)

SITRAK

(732) CHINA NATIONAL HEAVY DUTY TRUCK GROUP CO., LTD.
(511) 12

(111) 1070115
(151) 01.02.2011.
(540)

CIOFF

(732) Beaussant, Philippe
(511) 41

(111) 1070117
(151) 03.02.2011.
(540)

EVITY

(732) Novozymes A/S
(511) 01

(111) 1070119
(151) 08.02.2011.
(540)

BANANANA

(732) Société des Produits Nestlé S.A.
(511) 29 30

(111) 1070126
(151) 22.02.2011.
(540)

AIR-CONDITION

(732) Henkel AG & Co. KGaA
(511) 03

(111) 1070133
(151) 25.02.2011.
(540)

COUPE'

(732) GUCCIO GUCCI S.P.A.
(511) 14

(111) 1070137
(151) 21.02.2011.
(540)

ESTA

(732) SOREMARTEC SA
(511) 29 30 32

(111) 1070141
(151) 21.02.2011.
(540)

GHOST LUMINOUS

(732) Procter & Gamble International Operations SA
(511) 03

(111) 1070151
(151) 24.06.2010.
(540)

SCHOOL ZONE

(732) "FISTOCOMMERCE" OOD
(511) 16 18 25 28 35

(111) 1070155
(151) 28.02.2011.
(540)

ANDRES SARDA

(732) VAN DE VELDE NV
(511) 25 35

(111) 1070158
(151) 12.05.2010.
(540)

GELIDALUX

(732) Dipl.-Ing. (FH) Lutz L. Zamecki
(511) 11

(111) 1070159
(151) 10.02.2011.
(540)

Rheosorbilact

(732) Association limited "Medical center "M.T.K.""
(511) 05

(111) 1070175
(151) 08.10.2010.
(540)

GREE 格力

(732) GREE ELECTRIC APPLIANCES, INC. OF ZHUHAI
(511) 07 09 11 16 35 37

(111) 1070228
(151) 22.02.2011.
(540)

(732) Suomen Luonnonsuojeluliitto R.Y.
(511) 42

(111) 1070231
(151) 28.02.2011.
(540)

Ô
DE L'ORANGERIE

(732) LANCOME PARFUMS ET BEAUTE & CIE
(511) 03

(111) 1070232
(151) 28.02.2011.
(540)

RENERGIE YEUX
MULTIPLE LIFT

(732) LANCOME PARFUMS ET BEAUTE & CIE
(511) 03

(111) 1070239
(151) 09.02.2011.
(540)

LISTENING 100% UNIVERSITY AWARD

(732) Intesa Sanpaolo S.p.A.
(511) 35 36 41

(111) 1070276
(151) 24.01.2011.
(540)

BTICOLLAGEN

(732) BIOTECHNOLOGY INSTITUTE, S.L.
(511) 05

(111) 1070283
(151) 19.10.2010.
(540)

Cool Bubble

(732) Kuhne Anlagenbau GmbH
(511) 07 09 16 42

(111) 1070284
(151) 19.11.2010.
(540)

BUCHER

(732) Bucher Industries AG
(511) 06 07 09 11 12 37 41 42

(111) 1070303
(151) 02.02.2011.
(540)

OPVIZOR

(732) Icomasoft AG
(511) 09 38 42

(111) 1070313
(151) 04.11.2010.
(540)

BATTISTINO

(732) TORREFAZIONE CAFFE' MICHELE BATTISTA S.R.L.
(511) 30

(111) 1070330
(151) 30.09.2010.
(540)

KaufMarkt

(732) Kaufland Warenhandel GmbH & Co. KG
(511) 03 07 09 11 14 18 21 25 28 29 30 31 32 33 35 36 37 38 39 40 41 43

(111) 1070332
(151) 18.10.2010.
(540)

travelplanet 24

(732) TRAVELPLANET24 LTD
(511) 39

(111) 1070344
(151) 13.12.2010.
(540)

RENDA

(732) "EkoSan" d.o.o. Banja Luka
(511) 25

(111) 1070345
(151) 13.12.2010.
(540)

MISS CAPRI

(732) "EkoSan" d.o.o. Banja Luka
(511) 25

(111) 1070346
(151) 26.11.2010.
(540)

Daex

(732) "JANUS" d.o.o. Brčko Distrikt
(511) 25

(111) 1070347
(151) 26.11.2010.
(540)

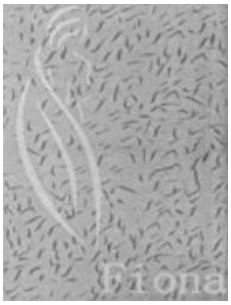

(732) "JANUS" d.o.o. Brčko Distrikt
(511) 25

(111) 1070348
(151) 26.11.2010.
(540)

(732) "JANUS" d.o.o. Brčko Distrikt
(511) 25

(111) 1070349
(151) 26.11.2010.
(540)

(732) "JANUS" d.o.o. Brčko Distrikt
(511) 25

(111) 1070350
(151) 13.12.2010.
(540)

(732) "EkoSan" d.o.o. Banja Luka
(511) 25

(111) 1070353
(151) 12.11.2010.
(540)

(732) WIENER STÄDTISCHE Versicherung AG Vienna Insurance Group
(511) 36

(111) 1070359
(151) 17.01.2011.
(540)

(732) ZORLUTEKS TEKSTİL TİCARET VE SANAYİ ANONİM ŞİRKETİ
(511) 24

(111) 1070381
(151) 17.02.2011.
(540)

NET TV

(732) Koninklijke Philips Electronics N.V.
(511) 09 38

(111) 1070382
(151) 17.02.2011.
(540)

(732) Koninklijke Philips Electronics N.V.
(511) 09 38

(111) 1070391
(151) 14.01.2011.
(540)

Ackermann

(732) Ackermann Thread KFT
(511) 23

(111) 1070403
(151) 20.01.2011.
(540)

FINNORD

(732) OBSCHESTVO S OGRANICHENNOY OTVETSTVENNOSTYU "TITAN"
(511) 32 33 35

(111) 1070407
(151) 04.03.2011.
(540)

MORE THAN MANURE

(732) Specialty Fertilizer Products, LLC
(511) 01

(111) 1070419
(151) 02.02.2011.
(540)

AXXEVA

(732) Axxeva Services AG
(511) 35 41

(111) 1070423
(151) 04.03.2011.
(540)

GENERAL MOBILE

(732) GENERAL MOBILE
(511) 09

(111) 1070431
(151) 27.12.2010.
(540)

SPEXER

(732) EADS DEFENCE AND SECURITY SYSTEMS
(511) 09 12 38 42

(111) 1070464
(151) 09.03.2011.
(540)

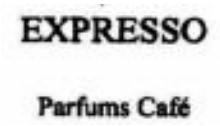

(732) COFINLUXE
(511) 03

(111) 1070480
(151) 16.02.2011.
(540)

(732) DUKAT d.d.
(511) 29

(111) 1070486
(151) 04.10.2010.
(540)

HELLENA

(732) "DUKAT" d.o.o. za trgovinu, Banja Luka
(511) 03

(111) 1070493
(151) 20.12.2010.
(540)

TAPPIOR

(732) SANOFI-AVENTIS
(511) 05

(111) 1070500
(151) 12.11.2010.
(540)

(732) WIENER STÄDTISCHE Versicherung AG Vienna Insurance Group
(511) 36

(111) 1070511
(151) 01.02.2011.
(540)

WIEDERHOLT

(732) VINCENZ WIEDERHOLT GmbH
(511) 06 42

(111) 1070512
(151) 01.02.2011.
(540)

(732) VINCENZ WIEDERHOLT GmbH
(511) 06 42

(111) 1070513
(151) 12.02.2011.
(540)

ESCADA

(732) ESCADA Luxembourg S.à r.l.
(511) 24

(111) 1070514
(151) 12.02.2011.
(540)

E

(732) ESCADA Luxembourg S.à r.l.
(511) 24

(111) 1070525
(151) 24.09.2010.
(540)

(732) ERYAP PLAŞTIK SANAYİ VE TİCARET ANONİM ŞİRKETİ
(511) 19

(111) 1070527
(151) 02.12.2010.
(540)

OYSHO

(732) INDUSTRIA DE DISEÑO TEXTIL, S.A. (INDITEX, S.A.)
(511) 03 04 08 09 14 16 18 20 21 24 25 26 28 35

(111) 1070530
(151) 09.12.2010.
(540)

(732) AGAPE S.R.L.
(511) 11 20 21

(111) 1070537
(151) 21.01.2011.
(540)

STRUMPFOVI

(732) STUDIO PEYO S.A.
(511) 03 09 14 16 18 21 24 25 28 29 30 32 35 41

(111) 1070544
(151) 11.02.2011.
(540)

(732) METCO (MIDDLE EAST TOBACCO CO.) LIMITED
(511) 34

(111) 1070562
(151) 11.02.2011.
(540)

PROARTAL

(732) BIOFARMA
(511) 05

(111) 1070573
(151) 28.02.2011.
(540)

NEO CITRAN

(732) NOVARTIS AG
(511) 05

(111) 1070587
(151) 17.02.2011.
(540)

MENACTRA

(732) Connaught Technology Corporation
(511) 05

(111) 1070612
(151) 04.03.2011.
(540)

(732) Jiangsu Ben Gang Investment Co., Ltd.
(511) 33

(111) 1070630
(151) 25.01.2011.
(540)

(732) Zott GmbH & Co. KG
(511) 29 30

(111) 1070633
(151) 18.02.2011.
(540)

CONCLUDE

(732) CONCLUDE BEFEKTETÉSI ZRT.
(511) 14

(111) 1070640
(151) 02.11.2010.
(540)

(732) Bemis Company, Inc.
(511) 16 17

(111) 1070649
(151) 01.12.2010.
(540)

(732) SENOBLE Central Europe, s.r.o.
(511) 29 30 32

(111) 1070664
(151) 14.01.2011.
(540)

(732) GLOBAL CLIMATE PARTNERSHIP FUND SA SICAV SIF
(511) 35 36 42

(111) 1070676
(151) 11.02.2011.
(540)

POWER-GEN

(732) Huang Hongde
(511) 07

(111) 1070680
(151) 17.01.2011.
(540)

GREINER VIBROGRAF

(732) Greiner Vibrograf AG
(511) 01 07 08 09 11 14 35 42

(111) 1070697
(151) 12.01.2011.
(540)

Ackermann

(732) Ackermann Thread AS
(511) 23

(111) 1070701
(151) 23.02.2011.
(540)

(732) BR IP Holder LLC
(511) 43

(111) 1070702
(151) 17.02.2011.
(540)

(732) The Trustees of the PwC Business Trust
(511) 35 36

(111) 1070734
(151) 03.03.2011.
(540)

CALLE 23

(732) Sophie Anne Celine Decobecq
(511) 33

(111) 1070741
(151) 01.03.2011.
(540)

(732) Société des Produits Nestlé S.A.
(511) 09 11 30

(111) 1070746
(151) 24.02.2011.

(540)

CLYK

(732) Bayer Aktiengesellschaft
(511) 05 10

(111) 1070747
(151) 24.02.2011.
(540)

CADENCY

(732) Bayer Aktiengesellschaft
(511) 05 10

(111) 1070750
(151) 02.02.2011.
(540)

DIALLON

(732) Bellini Personal AG
(511) 35 41

(111) 1070754
(151) 18.01.2011.
(540)

OIS

(732) Robert Bosch GmbH
(511) 03 07 08

(111) 1070759
(151) 10.02.2011.
(540)

(732) Porbalemsted Limited
(511) 25 28 35

(111) 1070764
(151) 14.02.2011.
(540)

(732) IIC-INTERSPORT International Corporation GmbH
(511) 09 18 21 25 28

(111) 1070770
(151) 16.02.2011.

(540)

(732) DUKAT d.d.
(511) 29

(111) 1070776
(151) 25.01.2011.
(540)

DAILYCER

(732) DE-VAU-GE CEREALS HOLDING GmbH
(511) 29 30 35

(111) 1070785
(151) 23.11.2010.
(540)

HOOLS

(732) Jerzy Kamiński
(511) 32 35

(111) 1070798
(151) 17.01.2011.
(540)

GREINER

(732) Greiner Vibrograf AG
(511) 01 07 08 09 11 14 35 42

(111) 1070810
(151) 18.01.2011.
(540)

KURATON

(732) Estelle Brouillé
(511) 03 16 41

(111) 1070817
(151) 11.02.2011.

(540)

(732) SAFILO SOCIETA' AZIONARIA FABBRICA ITALIANA LAVORAZIONE OCCHIALI S.p.A.
(511) 09

(111) 1070819
(151) 04.01.2011.
(540)

MİSSMOİ

(732) YENER TEKSTİL SANAYİ ÜRÜNLERİ TİCARET LİMİTED ŞİRKETİ
(511) 25 35

(111) 1070820
(151) 15.10.2010.
(540)

(732) DECATHLON
(511) 09 11 14 28 35 41

(111) 1070838
(151) 11.03.2011.
(540)

VENUE

(732) Dell Inc.
(511) 09

(111) 1070846
(151) 11.03.2011.
(540)

DAILIES AIR140

(732) NOVARTIS AG
(511) 09

(111) 1070859
(151) 17.12.2010.
(540)

Arbidol

(732) Public Joint Stock Company "Pharmstandard"
(511) 01 29

(111) 1070863
(151) 17.02.2011.
(540)

EXCEPTIO

(732) ESSILOR INTERNATIONAL (COMPAGNIE GENERALE D'OPTIQUE)
(511) 09

(111) 1070867
(151) 10.02.2011.
(540)

(732) Porbalemsted Limited
(511) 25 28 35

(111) 1070902
(151) 01.02.2011.
(540)

(732) SILVIO ANDRIGHETTI S.P.A.
(511) 02 06 20 21 27

(111) 1070906
(151) 17.12.2009
(540)

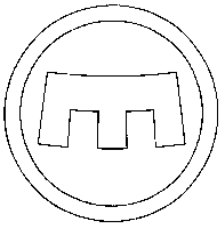

(732) Gustav Magenwirth GmbH & Co. KG
(511) 01 07 08 09 12 18 25 28

(111) 1045771
(151) 24.02.2010.
(540)

VIAJET

(732) FAUN Umwelttechnik GmbH & Co. KG
(511) 07 09 12

(111) 1058290
(151) 14.10.2010.
(540)

R.M. GATTEFOSSÉ

(732) GATTEFOSSÉ HOLDING
(511) 03 44

(111) 1070919
(151) 01.02.2011.
(540)

LIPOCOMB

(732) EGIS GYÓGYSZERGYÁR Nyilvánosan Működő Részvénytársaság
(511) 05

(111) 1070920
(151) 01.02.2011.
(540)

CHOLECOMB

(732) EGIS GYÓGYSZERGYÁR Nyilvánosan Működő Részvénytársaság
(511) 05

(111) 1070924
(151) 11.02.2011.
(540)

INTERSOLAR

(732) Freiburg Wirtschaft Touristik und Messe GmbH & Co. KG
(511) 35 41

(111) 1070933
(151) 17.01.2011.
(540)

MAGFIT

(732) Hansgrohe AG
(511) 06 11 17

(111) 1070963
(151) 10.09.2010.
(540)

BESPRO

(732) AGROEKOLA EOOD
(511) 05 29 30 31

(111) 1070976
(151) 23.02.2011.
(540)

AEMOTIO

(732) BRUSAFERRI & C. SRL
(511) 10 20

(111) 1070978
(151) 15.02.2011.
(540)

(732) PERNOD RICARD, société anonyme
(511) 33

(111) 1070989
(151) 28.02.2011.
(540)

(732) Philip Morris Products S.A.
(511) 34

(111) 1070990
(151) 01.03.2011.
(540)

GOLD ADVANCE

(732) Philip Morris Brands S.A.R.L.
(511) 34

(111) 1071006
(151) 28.02.2011.
(540)

APPLE

(732) Apple Inc.
(511) 45

(111) 1071007
(151) 28.02.2011.
(540)

(732) Apple Inc.
(511) 45

(111) 1071010
(151) 30.09.2010.
(540)

(732) "EkoSan" d.o.o. Banja Luka
(511) 25

(111) 1071028
(151) 25.02.2011.
(540)

ROUGE IN LOVE

(732) LANCOME PARFUMS ET BEAUTE & CIE
(511) 03

(111) 1071029
(151) 07.01.2011.
(540)

AIRPLAY

(732) Apple Inc.
(511) 09

(111) 1071030
(151) 25.02.2011.
(540)

(732) Apple Inc.
(511) 09

(111) 1071047
(151) 14.12.2010.
(540)

(732) BRITA GmbH
(511) 05 07 11 21 32 40

(111) 1071048
(151) 14.12.2010.
(540)

BRITA

(732) BRITA GmbH
(511) 05 07 11 21 32 40

(111) 1071052
(151) 28.12.2010.
(540)

(732) "Anchealo Consultants" Ltd.
(511) 35 41 42

(111) 1071054
(151) 16.02.2011.
(540)

(732) DUKAT d.d.
(511) 29 30

(111) 1071057
(151) 08.01.2011.
(540)

(732) SCA Hygiene Products GmbH
(511) 03 05 16

(111) 1071060
(151) 08.07.2010.
(540)

(732) Fédération Internationale de Football Association (FIFA)
(511) 01 03 04 05 06 07 08 09 10 11 12 14 15 16 18 20 21 24 25 26 27 28 29 30 31 32 33 34 35 36 37 38 39 40 41 42 43 45

(111) 1071089
(151) 03.11.2010.
(540)

(732) JUB-H d.d.
(511) 02 16 17 19 27

(111) 1071091
(151) 05.01.2011.
(540)

SENSOFOIL

(732) Braun GmbH
(511) 08

(111) 1071092
(151) 19.01.2011.
(540)

GRAPPA DI LUCIA

(732) Kaufland Warenhandel GmbH & Co. KG
(511) 29 30 33

(111) 1071119
(151) 01.12.2010.
(540)

(732) SENOBLE Central Europe, s.r.o.
(511) 29 30 32

(111) 1071120
(151) 01.12.2010.
(540)

(732) SENOBLE Central Europe, s.r.o.
(511) 29 30 32

(111) 1071121
(151) 01.12.2010.
(540)

FIDKO

(732) SENOBLE Central Europe, s.r.o.
(511) 29 30 32

(111) 1071123
(151) 24.11.2010.
(540)

EVOSWITCH

(732) EvoSwitch Netherlands BV
(511) 37 38 42

(111) 1071147
(151) 23.12.2010.
(540)

(732) "CAMCO" LTD
(511) 03 05 28

(111) 1071163
(151) 25.01.2011.
(540)

(732) Gühring oHG
(511) 07 08 42

(111) 1071165
(151) 19.01.2011.
(540)

(732) VIENNA INSURANCE GROUP AG Wiener Versicherung Gruppe
(511) 36

(111) 1071173
(151) 15.02.2011.
(540)

IPHONE

(732) Apple Inc.
(511) 35 38

(111) 1071174
(151) 11.02.2011.
(540)

(732) METCO (MIDDLE EAST TOBACCO CO.) LIMITED
(511) 34

(111) 1071233
(151) 11.03.2011.
(540)

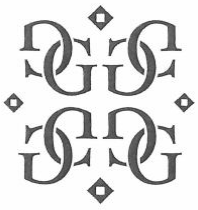

(732) Guess?, Inc.
(511) 18

(111) 1071250
(151) 14.02.2011.
(540)

Ackermann

(732) Obschestvo s ogranichennoy otvetstvennostyu "Ackermann Textilien"
(511) 21 24 25

(111) 1071251
(151) 04.02.2011.
(540)

Profi-LACT

(732) STADA PHARMA CZ, s.r.o.
(511) 05

(111) 1071266
(151) 28.02.2011.
(540)

(732) ORIFLAME COSMETICS S.A.
(511) 03 05 14 16 25 35 41

(111) 1071276
(151) 03.03.2011.
(540)

STULNON

(732) RICHTER GEDEON NYRT.
(511) 05

(111) 1071277
(151) 03.03.2011.
(540)

ZAKREPIN

(732) RICHTER GEDEON NYRT.
(511) 05

(111) 1071284
(151) 18.02.2011.
(540)

MUSECCO

(732) RADGONSKE GORICE d.d.
(511) 33 35 39

(111) 1071298
(151) 03.03.2011.
(540)

(732) Association des Opérateurs postaux publics européens AISBL, en abrégé POSTEUROP
(511) 16 18 35 39 40

(111) 1071311
(151) 09.02.2011.
(540)

(732) PONZIO SUD S.R.L.
(511) 06 19

(111) 1071316
(151) 30.11.2010.
(540)

Jowat-Toptherm

(732) Jowat AG
(511) 01 16 17

(111) 1071330
(151) 24.01.2011.
(540)

AQUA VIVA

(732) AQUA VIVA d.o.o.
(511) 07 11 21

(111) 1071332
(151) 15.02.2011.
(540)

Rápido

(732) Kaufland Warenhandel GmbH & Co. KG
(511) 33

(111) 1071335
(151) 29.09.2010.
(540)

M7

(732) KAEM Spólka z ograniczoną odpowiedzialnością Spólka komandytowa
(511) 16 21

(111) 1071337
(151) 16.02.2011.
(540)

(732) DUKAT d.d.
(511) 29

(111) 1071338
(151) 16.02.2011.
(540)

(732) DUKAT d.d.
(511) 29

(111) 1071353
(151) 07.03.2011.
(540)

PRADA CANDY

(732) PRADA S.A.
(511) 03

(111) 1071360
(151) 02.02.2011.
(540)

JETSTREAM, a Credit Agricole CIB Electronic Solution

(732) CREDIT AGRICOLE CORPORATE AND INVESTMENT BANK
(511) 36 38 42

(111) 1071371
(151) 17.02.2011.
(540)

FIREFLEX

(732) SWEDISH MATCH LIGHTERS B.V.
(511) 11

(111) 1071372
(151) 07.02.2011.
(540)

IDC

(732) Julius-K9 Bt.
(511) 18 28

(111) 1071375
(151) 04.03.2011.
(540)

K-Y

(732) Janssen Pharmaceutica NV
(511) 03

(111) 1071386
(151) 25.01.2011.
(540)

(732) E.G.O. Elektro-Gerätebau GmbH
(511) 06 07 09 11

(111) 1071387
(151) 04.11.2010.
(540)

(732) TORREFAZIONE CAFFE' MICHELE BATTISTA S.R.L.
(511) 30

(111) 1071388
(151) 04.11.2010.
(540)

JUB DesignStudio

(732) JUB-H d.d.
(511) 35 42

(111) 1071395
(151) 04.11.2010.
(540)

JUB

(732) JUB-H d.d.
(511) 01 02 16 17 19 35 37 40 41 42

(111) 1071396
(151) 08.10.2010.
(540)

YUX!

(732) Andreas Fugger
(511) 25 28 41

(111) 1071402
(151) 26.10.2010.
(540)

(732) "FOODCARE SPÓŁKA Z OGRANICZONA ODPOWIEDZIALNOŚCIA " SPÓŁKA KOMANDYTOWA
(511) 05 30 32

(111) 1071403
(151) 29.11.2010.
(540)

ICEPIPE

(732) Zaonzi Co.,Ltd.
(511) 11

(111) 1071404
(151) 07.12.2010.
(540)

GOLD CLASS

(732) BLITZ-CINESTAR d.o.o.
(511) 35 41 43

(111) 1071411
(151) 11.12.2010.
(540)

Wolke

(732) Dr. August Oetker Nahrungsmittel KG
(511) 30

(111) 1071435
(151) 15.02.2011.
(540)

IDEALINA

(732) DIETLAB-PRODUTOS DIETÉTICOS E FARMACÈUTICOS, LDA
(511) 03 05

(111) 1071447
(151) 28.02.2011.

(540)

NESCAFE ALEGRIA

(732) Société des Produits Nestlé S.A.
(511) 09 11 30

(111) 1071449
(151) 08.03.2011.
(540)

(732) Sylmark Holdings Limited
(511) 08

(111) 1071472
(151) 04.02.2011.
(540)

FARMASİ

(732) TAN-ALİZE KOZMETİK VE TEMİZLİK ÜRÜNLERİ SANAYİ VE TİCARET ANONİM ŞİRKETİ
(511) 03 05

(111) 1071473
(151) 17.02.2011.
(540)

erhas

(732) ERHAS BORU VE MAKİNA EKİPMANLARI INDÜSTRİSİ A.Ş.
(511) 11 17 21

(111) 1071486
(151) 30.12.2010.
(540)

(732) CHINA NATIONAL HEAVY DUTY TRUCK GROUP CO., LTD.
(511) 07 37

(111) 1071492
(151) 25.10.2010.
(540)

(732) ERKAN SOYYİĞİT
(511) 25

(111) 1071494
(151) 08.03.2011.
(540)

AMTURNIDE

(732) NOVARTIS AG
(511) 05

(111) 1071495
(151) 02.03.2011.
(540)

WHAT ELSE?

(732) Société des Produits Nestlé S.A.
(511) 30

(111) 1071497
(151) 15.03.2011.
(540)

(732) MARTELL & Co
(511) 33

(111) 1071498
(151) 22.03.2011.
(540)

(732) PERNOD RICARD ITALIA S.P.A.
(511) 33

(111) 1071500
(151) 24.02.2011.
(540)

FineStar

(732) SANOFI-AVENTIS
(511) 10

(111) 1071559
(151) 07.02.2011.
(540)

LINATERA

(732) Bayer Schering Pharma AG
(511) 05

(111) 1071563
(151) 21.02.2011.
(540)

(732) Koninklijke BAM Groep N.V.
(511) 35 37 42

(111) 1071579
(151) 31.01.2011.
(540)

(732) Trabucco Fishing Diffusion Co. S.r.l.
(511) 25 28

(111) 1071596
(151) 19.11.2010.
(540)

BUCHER

(732) Bucher Industries AG
(511) 06 07 09 11 12 37 41 42

(111) 1071598
(151) 30.11.2010.
(540)

Jowatac

(732) Jowat AG
(511) 01

(111) 1071604
(151) 16.12.2010.
(540)

(732) HUGO BOSS Trade Mark Management GmbH & Co. KG
(511) 03 09 14 18 25 35 42

(111) 1071613
(151) 19.01.2011.
(540)

Volmary

(732) VOLMARY GmbH
(511) 31

(111) 1071618
(151) 18.02.2011.
(540)

PRIMAVERA

(732) Hansgrohe AG
(511) 11

(111) 1071619
(151) 10.02.2011.
(540)

(732) FERRERO S.P.A.
(511) 30

(111) 1071639
(151) 05.01.2011.
(540)

(732) Krüger GmbH & Co. KG
(511) 01 03 05 29 30 32

(111) 1071640
(151) 10.01.2011.
(540)

(732) DS Produkte GmbH
(511) 10 25 28

(111) 1071648
(151) 03.03.2011.
(540)

MAGNUM

(732) CAM2 INTERNATIONAL LLC
(511) 04

(111) 1071690
(151) 15.02.2011.
(540)

TASECTAN

(732) NOVINTETHICAL PHARMA, Sagl
(511) 05

(111) 1071704
(151) 14.03.2011.
(540)

(732) INTERNATIONAL CAPACITORS, S.A.
(511) 09 39

(111) 1071707
(151) 03.02.2011.
(540)

SEPTOBENE

(732) Krka, tovarna zdravil, d.d., Novo mesto
(511) 05 30

(111) 1071719
(151) 14.03.2011.
(540)

(732) V&S Vin & Sprit Aktiebolag
(511) 33

(111) 1071720
(151) 14.03.2011.
(540)

(732) V&S Vin & Sprit Aktiebolag
(511) 33

(111) 1071721
(151) 14.03.2011.
(540)

(732) V&S Vin & Sprit Aktiebolag
(511) 33

(111) 1071738
(151) 22.02.2011.
(540)

(732) CHEN YUPING
(511) 18

(111) 1071748
(151) 03.03.2011.
(540)

CYCLOPS

(732) SOLETANCHE FREYSSINET
(511) 09 37 42

(111) 1071749
(151) 24.02.2011.
(540)

iCGStar

(732) SANOFI-AVENTIS
(511) 09 10

(111) 1071778
(151) 23.02.2011.
(540)

SEKONDA

(732) Time Products (UK) Limited
(511) 14

(111) 1071786
(151) 12.01.2011.
(540)

ASFOUR CRYSTAL

(732) Cristal Asfour International
(511) 35

(111) 1071793
(151) 02.02.2011.
(540)

SPADA

(732) Spazio d'Ambrosio GmbH/
(511) 14 18 25

(111) 1071794
(151) 02.02.2011.
(540)

PRIMA BALLERINA

(732) Spazio d'Ambrosio GmbH / Cesare d'Ambrosio
(511) 14 18 25

(111) 1071795
(151) 01.02.2011.
(540)

MAXXMOTION

(732) OMV Refining & Marketing GmbH
(511) 01 04 35 42

(111) 1071819
(151) 15.11.2010.
(540)

(732) ANTICO CAFFE' GRECO S.R.L.
(511) 21 30 43

(111) 1071821
(151) 21.12.2010.
(540)

tesa Anti Scratch

(732) tesa SE
(511) 01 06 16 17 19 26

(111) 1071822
(151) 21.12.2010.
(540)

tesa Anti Shock

(732) tesa SE
(511) 01 06 16 17 19 26

(111) 1071823
(151) 21.12.2010.
(540)

tesa Auto

(732) tesa SE
(511) 01 06 16 17 19 26

(111) 1071842
(151) 18.02.2011.
(540)

Assist-Trend

(732) Assist-Trend Kft.
(511) 03 04 05 16 21 35 37 39

(111) 1071879
(151) 26.01.2011.
(540)

(732) MELICONI S.P.A.
(511) 07 09 20 21

(111) 1071902
(151) 15.02.2011.
(540)

OPENTOUCH

(732) ALCATEL LUCENT
(511) 09

(111) 1071927
(151) 08.06.2010.
(540)

(732) Albert Kerbl GmbH
(511) 02 03 04 05 06 07 08 09 10 11 16 17 18 19 20 21 22 24 25 28 31 35

(111) 1071931
(151) 16.02.2011.
(540)

(732) Reinhold Fleckenstein Jeanswear GmbH Fertigung und Vertrieb modischer Freizeitbekleidung
(511) 16 18 25 26

(111) 1071953
(151) 12.02.2011.
(540)

ALBRECHT BÄUMER

(732) Albrecht Bäumer GmbH & Co. KG
(511) 07 09 20

(111) 1071961
(151) 15.02.2011.
(540)

DULCOVIVA

(732) Boehringer Ingelheim International GmbH
(511) 05 29 30

(111) 1071964
(151) 25.10.2010.
(540)

(732) LINING SPORTS (SHANGHAI) COMPANY LIMITED
(511) 18 25 28

(111) 1071968
(151) 11.11.2010.
(540)

IHC MERWEDE

(732) IHC Holland IE B.V.
(511) 07 12

(111) 1071988
(151) 05.01.2011.
(540)

RobotIQ

(732) Henkel AG & Co. KGaA
(511) 01 07

(111) 1071990
(151) 16.02.2011.
(540)

(732) DUKAT d.d.
(511) 29

(111) 1072021
(151) 09.12.2010.
(540)

GILETTA

(732) GILETTA S.P.A.
(511) 07 09 12 37

(111) 1072027
(151) 27.01.2011.
(540)

frux TopLine

(732) Gebr. Patzer GmbH & Co. KG
(511) 01 31

(111) 1072041
(151) 11.03.2011.
(540)

(732) STUDIO MODERNA SA
(511) 10

(111) 1072045
(151) 18.03.2011.
(540)

LINEA
Baume & Mercier

(732) RICHEMONT INTERNATIONAL SA
(511) 14

(111) 1072071
(151) 10.02.2010.
(540)

(732) Perfect Nails Kft.
(511) 03 41

(111) 1072080
(151) 07.10.2010.
(540)

Миродения

(732) DF World of Spices GmbH
(511) 29 30

(111) 1072085
(151) 06.12.2010.
(540)

(732) SC Orkla Foods Romania SA
(511) 30

(111) 1072096
(151) 23.12.2010.
(540)

(732) ADRIA DESIGN d.o.o.
(511) 16 18 24 25 28 35

(111) 1072097
(151) 23.12.2010.
(540)

(732) ADRIA DESIGN d.o.o.
(511) 05 08 09 11 16 18 20 21 24 28 35 41

(111) 1072098
(151) 23.12.2010.
(540)

(732) ADRIA DESIGN d.o.o.
(511) 16 18 24 35

(111) 1072099
(151) 23.12.2010.
(540)

(732) ADRIA DESIGN d.o.o.
(511) 16 28 35

(111) 1072100
(151) 23.12.2010.
(540)

(732) ADRIA DESIGN d.o.o.
(511) 16 18 24 25 28 35

(111) 1072101
(151) 23.12.2010.
(540)

(732) ADRIA DESIGN d.o.o.
(511) 16 28 35

(111) 1072102
(151) 23.12.2010.
(540)

(732) ADRIA DESIGN d.o.o.
(511) 16 28 35

(111) 1072103
(151) 23.12.2010.
(540)

(732) ADRIA DESIGN d.o.o.
(511) 16 18 24 25 28 35

(111) 1072111
(151) 04.01.2011.
(540)

(732) GRUPA LOTOS SPÓŁKA AKCYJNA
(511) 04

(111) 1072112
(151) 04.01.2011.
(540)

(732) GRUPA LOTOS SPÓŁKA AKCYJNA
(511) 04

(111) 1072113
(151) 02.02.2011.

(540)

Logitrans

(732) Messe München GmbH
(511) 16 35 41

(111) 1072134
(151) 24.02.2011.
(540)

CGStar

(732) SANOFI-AVENTIS
(511) 09 10

(111) 1072155
(151) 22.02.2011.
(540)

PAGLITAZ

(732) KRKA, tovarna zdravil, d.d., Novo mesto
(511) 05

(111) 1072156
(151) 22.02.2011.
(540)

FLIMABO

(732) KRKA, tovarna zdravil, d.d., Novo mesto
(511) 05

(111) 1072157
(151) 22.02.2011.
(540)

FLIMABEND

(732) KRKA, tovarna zdravil, d.d., Novo mesto
(511) 05

(111) 1072158
(151) 22.02.2011.
(540)

ZOGLIDA

(732) KRKA, tovarna zdravil, d.d., Novo mesto
(511) 05

(111) 1072166
(151) 22.03.2011.
(540)

RAMAZZOTTI

(732) PERNOD RICARD ITALIA S.P.A.
(511) 33

(111) 1072208
(151) 07.03.2011.
(540)

(732) DUKAT d.d.
(511) 29

(111) 1072209
(151) 07.03.2011.
(540)

(732) DUKAT d.d.
(511) 29

(111) 1072223
(151) 14.03.2011.
(540)

(732) Natalija ZIZINA
(511) 38

(111) 1072225
(151) 11.02.2011.
(540)

(732) Deichmann SE
(511) 25

(111) 1072232
(151) 25.03.2011.
(540)

ADULATIO

(732) Arne Koss
(511) 03 05 10 21 28 32

(111) 1072245
(151) 11.02.2011.
(540)

(732) Deichmann SE
(511) 25

(111) 1072246
(151) 04.10.2010.
(540)

(732) "DUKAT" d.o.o. za trgovinu, Banja Luka
(511) 01 03 08 11 16 21

(111) 1072247
(151) 14.02.2011.
(540)

NUXE

(732) LABORATOIRE NUXE
(511) 03 44

(111) 1072249
(151) 17.02.2011.
(540)

DIARICHESSE

(732) L'OREAL
(511) 03

(111) 1072255
(151) 11.03.2011.
(540)

AUBAGIO

(732) SANOFI-AVENTIS
(511) 05

(111) 1072277
(151) 14.05.2010.
(540)

(732) MIP METRO Group Intellectual Property GmbH & Co. KG
(511) 01 02 03 04 05 06 07 08 09 11 12 16 17 19 20 21 22 23 24 25 27

(111) 1072301
(151) 21.01.2011.
(540)

(732) STUDIO PEYO S.A.
(511) 35

(111) 1072303
(151) 21.01.2011.
(540)

THE SMURFS

(732) STUDIO PEYO S.A.
(511) 35

(111) 1072305
(151) 27.01.2011.
(540)

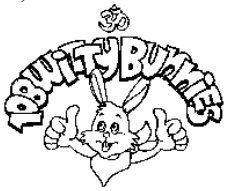

(732) VALENTIN TOMISLAVOV TODOROV ANGELA BORISLAVOVA TODOROVA
(511) 03 05 25 29 30 32

(111) 1072306
(151) 17.01.2011.
(540)

VIBROGRAF

(732) Greiner Vibrograf AG
(511) 01 07 08 09 11 14 35 42

(111) 1072316
(151) 21.01.2011.
(540)

(732) Erhard Hofstädter
(511) 29

(111) 1072323
(151) 17.02.2011.
(540)

(732) Ivax International GmbH
(511) 05

(111) 1072333
(151) 17.03.2011.
(540)

LUZINDO

(732) Syngenta Participations AG
(511) 05

(111) 1072348
(151) 24.03.2011.
(540)

PARLIAMENT

(732) Philip Morris Brands Sàrl
(511) 34

(111) 1072395
(151) 10.03.2011.
(540)

Tetrilin

(732) CHEPHASAAR Chem.-Pharm. Fabrik GmbH
(511) 05

(111) 1072426
(151) 24.02.2011.
(540)

(732) Bayer Aktiengesellschaft
(511) 05

(111) 1072440
(151) 24.02.2011.
(540)

(732) POSLOVNI SISTEM MERCATOR, d.d.
(511) 29 30 31 32 33

(111) 1072457
(151) 15.09.2010.
(540)

TOSOT

(732) GREE ELECTRIC APPLIANCES, INC. OF ZHUHAI
(511) 07 09 11 16 35 37

(111) 1072474
(151) 08.03.2011.
(540)

AMBIXOL

АМБИКСОЛ

(732) SOPHARMA AD
(511) 05

(111) 1072475
(151) 21.02.2011.
(540)

Tebodin always close

(732) Koninklijke BAM Groep N.V.
(511) 35 37 42

(111) 1072476
(151) 24.03.2011.
(540)

ELINGAUSS

(732) NIVAROX-FAR S.A.
(511) 06 14

(111) 1072492
(151) 04.01.2011.
(540)

ALPHA

(732) GUANGDONG ALPHA ANIMATION AND CULTURE CO.,LTD
(511) 28

(111) 1072506
(151) 20.12.2010.
(540)

(732) VIER PFOTEN International - gemeinnützige Privatstiftung
(511) 16 25 35 41 42

(111) 1072507
(151) 20.12.2010.
(540)

CARODOG
RESPONSABLE OWNERSHIP

(732) VIER PFOTEN International - gemeinnützige Privatstiftung
(511) 16 25 35 41 42

(111) 1072511
(151) 21.09.2010.
(540)

(732) Ljubljanske mlekarne d.d.
(511) 05 29 30 32

(111) 1072522
(151) 16.08.2010.
(540)

URBO

(732) IG HOLDINGS LIMITED
(511) 06 07 09 37 42

(111) 1072537
(151) 24.12.2010.
(540)

(732) ATİKER METAL İTHALAT İHRACAT VE İMALAT SANAYİ TİCARET ANONİM ŞİRKETİ
(511) 06 07 09

(111) 1072545
(151) 20.01.2011.
(540)

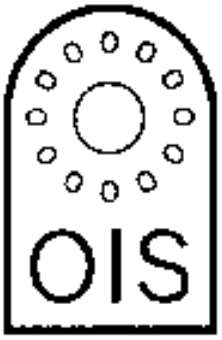

(732) Robert Bosch GmbH
(511) 03 07 08

(111) 1072549
(151) 11.02.2011.
(540)

STAR'BAKE

(732) LESAFFRE ET COMPAGNIE
(511) 30

(111) 1072555
(151) 04.03.2011.
(540)

(732) ATİKER METAL İTHALAT İHRACAT VE İMALAT SANAYİ TİCARET ANONİM ŞİRKETİ
(511) 06 07 09

(111) 1072563
(151) 11.02.2011.
(540)

GILLETTE

(732) Obshchestvo s ogranichennoy otvetstvennost'yu "Shest' banok"
(511) 09

(111) 1072589
(151) 02.03.2011.
(540)

(732) M-real Corporation
(511) 16

(111) 1072596
(151) 17.02.2011.
(540)

MARGARET

(732) Dotchirne pidpriemstvo "Konditerska korporatzia "Roshen"
(511) 30

(111) 1072597
(151) 07.02.2011.
(540)

Mr. Fizzy

(732) Dotchirne pidpriemstvo "Konditerska korporatzia "Roshen"
(511) 30

(111) 1072601
(151) 03.03.2011.
(540)

IMTREX

(732) BASF SE
(511) 05

(111) 1072628
(151) 23.03.2011.
(540)

CHEWY'S

(732) Migros-Genossenschafts-Bund
(511) 30

(111) 1072629
(151) 10.02.2011.
(540)

SIKATHERM

(732) Sika AG
(511) 17

(111) 1072633
(151) 24.01.2011.
(540)

COAST, WEBER & AHAUS

(732) MONCLER S.R.L.
(511) 09 18 25

(111) 1072637
(151) 24.01.2011.
(540)

SANHO

(732) RORO GmbH - R. Rott
(511) 06 09 11 19 20 35 37 38

(111) 1072646
(151) 09.11.2010.
(540)

MKM CO-PHARMA

(732) MKM Marketing Institute GmbH
(511) 05 09 16 35 41 44

(111) 1072660
(151) 15.12.2010.
(540)

masimar

(732) BEST MODE TEKSTİL SANAYİ VE DIŞ TİCARET LİMİTED ŞIRKETİ
(511) 25 35

(111) 1072664
(151) 19.01.2011.
(540)

BLOWER DOOR

(732) BlowerDoor GmbH Messysteme für Lufdichtheit
(511) 09 11 37 42

(111) 1072682
(151) 23.03.2011.
(540)

Evergreen

(732) TURBON AG
(511) 02

(111) 1072685
(151) 14.03.2011.
(540)

(732) Deichmann SE
(511) 25

(111) 1016598
(151) 29.07.2009.
(540)

HARSCO

(732) Harsco Technologies LLC
(511) 01 03 06 07 09 11 12 19 35 37 39 40 42 43

(111) 1044483
(151) 26.05.2010.
(540)

ROBERTA GANDOLFI

(732) ROBERTA GANDOLFI S.R.L.
(511) 14 18 25

(111) 1072688
(151) 10.02.2011.
(540)

STORANET

(732) BASF SE
(511) 05 22

(111) 1072694
(151) 18.02.2011.
(540)

(732) Forest-Papír Kft.
(511) 03 05 06 16 17

(111) 1072702
(151) 03.01.2011.
(540)

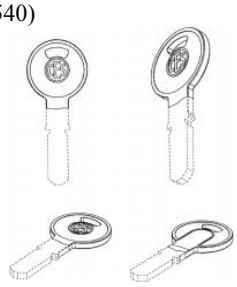

(732) C.Ed.Schulte Gesellschaft mit beschränkter Haftung Zylinderschlossfabrik
(511) 06

(111) 1072708
(151) 25.11.2010.
(540)

BisAs

(732) MEDIS, Podjetje za proizvodnjo in trženje, d.o.o.
(511) 05 29 30

(111) 1072733
(151) 10.06.2010.
(540)

(732) Al Telekom Austria Aktiengesellschaft
(511) 09 16 28 35 36 37 38 40 41 42 45

(111) 1072747
(151) 21.03.2011.
(540)

COMBINO

(732) Lidl Stiftung & Co. KG
(511) 30

(111) 1072757
(151) 21.03.2011.
(540)

SILGARD

(732) Merck Sharp & Dohme Corp., New Jersey corporation
(511) 05

(111) 1072780
(151) 07.02.2011.
(540)

PAUL'S BOUTIQUE

(732) Paul's Boutique Ltd
(511) 03 14 18 25

(111) 1072785
(151) 14.03.2011.
(540)

Gran Cereale

(732) Barilla G. e R. Fratelli - Societá per Azioni
(511) 30

(111) 1072786
(151) 25.03.2011.
(540)

REINZOPLAST

(732) Reinz Dichtungs-GmbH
(511) 01 17

(111) 1072787
(151) 25.03.2011.

(540)

REINZOSIL

(732) Reinz Dichtungs-GmbH
(511) 01 17

(111) 1072799
(151) 22.02.2011.
(540)

FANTASY MOMENTS

(732) Henkel AG & Co. KGaA
(511) 03

(111) 1072818
(151) 02.07.2010.
(540)

KVK

(732) Krkonošské vápenky Kunčice, a.s.
(511) 01 19 37 40 42

(111) 1072827
(151) 02.12.2010.
(540)

bankarna

(732) Nova Ljubljanska banka d.d., Ljubljana
(511) 09 16 28 35 36 38 41 42 45

(111) 1072828
(151) 09.12.2010.
(540)

SIMPLY RIGHT

(732) MIP METRO Group Intellectual Property GmbH & Co. KG
(511) 09 16 35 36 38 41 42 45

(111) 1072829
(151) 01.12.2010.
(540)

FINE FOOD

(732) MIP METRO Group Intellectual Property GmbH & Co. KG
(511) 29 30 31 32

(111) 1072851
(151) 30.12.2010.
(540)

SITRAK

(732) CHINA NATIONAL HEAVY DUTY TRUCK GROUP CO., LTD.
(511) 07 37

(111) 1072868
(151) 02.03.2011.
(540)

TECHZINE

(732) ALCATEL LUCENT
(511) 16 41

(111) 1072880
(151) 11.02.2011.
(540)

(732) Deichmann SE
(511) 25

(111) 1072881
(151) 11.02.2011.
(540)

(732) Deichmann SE
(511) 25

(111) 1072886
(151) 31.03.2011.
(540)

Munich RE

(732) Münchener Rückversicherungs-Gesellschaft Aktiengesellschaft in München
(511) 36

(111) 1072891
(151) 16.11.2010.
(540)

SV Werder Bremen

(732) Sport-Verein "Werder" V. 1899 e.V.
(511) 09 14 16 18 21 24 25 28 41 42

(111) 1072896
(151) 27.12.2010.
(540)

SEE N.MEDIA

(732) Seen Media GmbH
(511) 09 37 38 41 42 45

(111) 1072908
(151) 01.03.2011.
(540)

DESIMITE

(732) BASF SE
(511) 05

(111) 1072911
(151) 17.01.2011.
(540)

BiBA

(732) BiBA GmbH
(511) 25

(111) 1072929
(151) 07.03.2011.
(540)

verallia

(732) SAINT GOBAIN EMBALLAGE
(511) 21 40

(111) 1072946
(151) 17.01.2011.
(540)

FONDITAL

(732) FONDITAL S.P.A.
(511) 09 11

(111) 1072956
(151) 29.11.2010.
(540)

DIASEN

(732) DIASEN S.R.L.
(511) 01 02 17 19 41

(111) 1072970
(151) 08.02.2011.
(540)

B.FAKE

(732) Leder & Schuh International AG
(511) 18 25 35

(111) 1072975
(151) 07.11.2010.
(540)

BIONORD

(732) Obschestvo s ogranichennoy otvetstvennostyu "GR-I"
(511) 01

(111) 1072982
(151) 23.03.2011.
(540)

PROSURVA

(732) Janssen Pharmaceutica NV
(511) 05

(111) 1072983
(151) 02.08.2010.
(540)

GUARDIANI

(732) NUOVA CENTAURO S.r.l.
(511) 18 25

(111) 1072989
(151) 28.09.2010.
(540)

SAMO

(732) SOCIETA' AZIONARIA MATERIALE OSPEDALIERO - S.A.M.O. - S.P.A.
(511) 10

(111) 1073006
(151) 28.12.2010.
(540)

GAS

(732) GROTTO S.P.A.
(511) 18 25 35

(111) 1073020
(151) 17.02.2011.
(540)

INCIDER

(732) Obala Grupa d.o.o.
(511) 32 33

(111) 1073057
(151) 24.03.2011.
(540)

ZURVANZ

(732) Janssen Pharmaceutica NV
(511) 05

(111) 1073058
(151) 24.03.2011.
(540)

SUVENSA

(732) Janssen Pharmaceutica NV
(511) 05

(111) 1073060
(151) 09.12.2010.
(540)

BURBERRY

(732) BURBERRY LIMITED
(511) 09 40 41 42

(111) 1073067
(151) 02.03.2011.
(540)

HYUNDAI | Before Service

(732) Hyundai Motor Company
(511) 37

(111) 1073076
(151) 09.11.2010.
(540)

VERSACE

(732) GIANNI VERSACE S.P.A.
(511) 03 08 09 11 12 14 16 18 19 20 21 24 25 27 35 42

(111) 1073092
(151) 09.12.2010.
(540)

GVE

(732) KORLOY INC.
(511) 07

(111) 1073093
(151) 10.12.2010.
(540)

OSU

(732) KORLOY INC.
(511) 07

(111) 1073130
(151) 30.03.2011.
(540)

INFINIWORX

(732) Microsystems Technology, Inc.
(511) 09

(111) 1073145
(151) 26.04.2010.
(540)

中国电信
CHINA TELECOM

(732) China Telecommunications Corporation
(511) 09 16 35 38 39 41 42 45

(111) 1073153
(151) 20.10.2010.
(540)

helsa

(732) helsa GmbH & Co. KG
(511) 17 24 25 26

(111) 1073168
(151) 10.11.2010.
(540)

(732) BIANCHETTI, Sauro BIANCHETTI, Michelangelo CASTELLI, Graziella
(511) 03 09 14 16 18 25

(111) 1073179
(151) 16.12.2010.
(540)

Herlag

(732) Herlag Holzwarenfabrik Gmbh & Co. KG
(511) 12 20

(111) 1073180
(151) 03.12.2010.
(540)

Эберспэхер

(732) J. Eberspächer GmbH & Co. KG
(511) 07 09 11 12 37 42 45

(111) 1073193
(151) 01.03.2011.
(540)

sandstone

(732) Li Jun
(511) 25

(111) 1073230
(151) 30.03.2011.
(540)

ABIRIBA

(732) Janssen Pharmaceutica NV
(511) 05

(111) 1073231
(151) 30.03.2011.
(540)

ZYTIGA

(732) Janssen Pharmaceutica NV
(511) 05

(111) 1073232
(151) 30.03.2011.
(540)

ABIVEON

(732) Janssen Pharmaceutica NV
(511) 05

(111) 1073233
(151) 30.03.2011.
(540)

FEXALTA

(732) Janssen Pharmaceutica NV
(511) 05

(111) 1073234
(151) 30.03.2011.
(540)

ABIZYME

(732) Janssen Pharmaceutica NV
(511) 05

(111) 1073235
(151) 24.03.2011.
(540)

KYLIE

(732) Mackays Stores Limited
(511) 25

(111) 1073239
(151) 01.06.2010.
(540)

Wilofa

(732) WILOFA DIAMANT Willi Lohmann GmbH & Co. KG
(511) 07 08 10 40

(111) 1073241
(151) 27.01.2011.

(540)

nutella

(732) FERRERO S.P.A.
(511) 16 29 30 32 33 35 41 43

(111) 1073308
(151) 15.02.2011.
(540)

DULCOVITALITY

(732) Boehringer Ingelheim International GmbH
(511) 05 29 30

(111) 1073313
(151) 23.12.2010.
(540)

ALPENFÖHN

(732) EKL AG
(511) 09 42

(111) 1073322
(151) 09.12.2010.
(540)

kiwy

(732) SEGRALL S.R.L.
(511) 12 20 25

(111) 1073323
(151) 07.01.2011.
(540)

SALVEO

(732) SALVEO d.o.o. za usluge
(511) 42 44

(111) 1073326
(151) 31.01.2011.
(540)

Calprene

(732) DYNASOL ELASTOMEROS, S.A.
(511) 01 17

(111) 1073329
(151) 18.01.2011.

(540)

(732) RAVAGO S.A.
(511) 01 16 17 19 35 39 40 42

(111) 1073332
(151) 28.12.2010.
(540)

(732) Obschestvo s ogranichennoy otvetstvennostyu "STROIGAZMONTAZH"
(511) 06 07 08 09 12 14 16 18 25 28 35 37

(111) 1073339
(151) 01.03.2011.
(540)

MOTION by AIRCOOL

(732) Leder & Schuh International AG
(511) 18 25 35

(111) 1073340
(151) 01.03.2011.
(540)

RED LURE

(732) WENZHOU GELEISI DRESS CO.,LTD
(511) 25

(111) 1073366
(151) 25.03.2011.
(540)

BIGBAT

(732) FIAS-S.R.L.
(511) 09

(111) 1073367
(151) 30.03.2011.
(540)

TERMIX NA·NO

(732) DOLS INDUSTRIAL DE PELUQUERÍA, S.A.
(511) 21

(111) 1073370
(151) 17.03.2011.
(540)

VESTAKEEP

(732) Evonik Degussa GmbH
(511) 17

(111) 1073408
(151) 02.12.2010.
(540)

NLB shop

(732) Nova Ljubljanska banka d.d., Ljubljana
(511) 09 16 35 36 38 41 42 45

(111) 1073409
(151) 23.12.2010.
(540)

REFERUM

(732) Drustvo za farmacevisko hemiski proizvodi REPLEK FARM DOOEL Skopje
(511) 05

(111) 1073412
(151) 07.12.2010.
(540)

PULL & BEAR

(732) INDUSTRIA DE DISEÑO TEXTIL, S.A. (INDITEX, S.A.)
(511) 03 09 14 16 18 24 25 26 28 35

(111) 1073425
(151) 20.01.2011.
(540)

miniMAX

(732) SAOP računalništvo d.o.o.
(511) 09 16 41

(111) 1073434
(151) 10.03.2011.
(540)

PARTY ZONE

(732) ITM ENTREPRISES, Société par actions simplifiée
(511) 03 04 08 16 21 29 30 32 33

(111) 1073435
(151) 10.03.2011.
(540)

VALLEY FARM

(732) MC CAIN ALIMENTAIRE
(511) 29

(111) 1073443
(151) 04.02.2011.
(540)

WAGRA

(732) BOĞAZİÇİ SİGARA VE TÜTÜNCÜLÜK SANAYİ VE TİCARET ANONIM ŞİRKETİ
(511) 34

(111) 1073457
(151) 14.03.2011.
(540)

FLASH BRONZER DREAM LEGS

(732) LANCOME PARFUMS ET BEAUTE & CIE
(511) 03

(111) 1073465
(151) 26.11.2010.
(540)

AlterMove

(732) CENTRE AUTO NORO-CANORO
(511) 07 09 12 35 36 37 38 39 41 42

(111) 1073474
(151) 31.01.2011.
(540)

(732) BANFI SOCIETA' AGRICOLA S.R.L.
(511) 29 30 33

(111) 1073487
(151) 08.03.2011.
(540)

Schneider

(732) Schneider Schreibgeräte GmbH
(511) 16

(111) 1073490
(151) 15.02.2011.
(540)

DEPURALINA

(732) DIETLAB-PRODUTOS DIETÉTICOS E FARMACÈUTICOS, LDA
(511) 03 05

(111) 1073502
(151) 19.01.2011.
(540)

DAYMOD

(732) CANKUT GÜN CANSU YAĞCI SÜLEYMAN ERCÜMENT GÜN
(511) 25

(111) 1073506
(151) 02.03.2011.
(540)

HYUNDAI | Before Service

(732) Hyundai Motor Company
(511) 12

(111) 1073510
(151) 06.08.2010.
(540)

tri-air

(732) Tri-Air Developments Limited
(511) 09 11 40

(111) 1073513
(151) 11.02.2011.
(540)

efko Genuss Plus

(732) "Efko" Frischfrucht und Delikatessen Gesellschaft m.b.H.
(511) 29 30 31 32

(111) 1073525
(151) 20.01.2011.
(540)

saop

(732) SAOP računalništvo d.o.o.
(511) 09 16 41 42

(111) 1073555
(151) 25.10.2010.
(540)

BAKIŞ

(732) BAKIŞ PVC VE YAPI ELEMANLARI MOBİLYA İNŞAAT MÜHENDİSLİK ELEKTRİK ELEKTRONİK NAKLİYAT TURİZM GIDA SANAYİ VE TİCARET LİMİTED ŞİRKETİ
(511) 20

(111) 1073556
(151) 12.11.2010.
(540)

xtag

(732) XAVIER MUÑOZ BELLVEHÍ
(511) 09 16 39

(111) 1073576
(151) 09.02.2011.
(540)

DIMOCO

(732) DIMOCO - Direct Mobile Communications GmbH
(511) 35 38 42

(111) 1073610
(151) 02.03.2011.
(540)

DOLCE & GABBANA

(732) GADO S.R.L.
(511) 08 11 20 21 22 24 27

(111) 1073632
(151) 24.02.2011.
(540)

NEUTROVAL
ניוטרוואל

(732) TEVA Pharmaceutical Industries LTD.
(511) 05

(111) 1073648
(151) 09.03.2011.
(540)

Cajun

(732) Dr. Ing. h.c.F. Porsche Aktiengesellschaft
(511) 12

(111) 1073649
(151) 23.02.2011.
(540)

Zgumee

(732) Dipl.-Ing. Hila Attaie
(511) 16 28

(111) 1073653
(151) 07.03.2011.
(540)

CORSAIR

(732) EDNOLITCHNO DRUJESTVO S OGRANITCHENA OTGOVORNOST "FINANSKONSULT"
(511) 29 34

(111) 1073658
(151) 24.02.2011.
(540)

Utopia

(732) Olga Sergeevna Tits
(511) 33

(111) 1073670
(151) 24.02.2011.
(540)

Zalando

(732) Zalando GmbH
(511) 18 25 35

(111) 1073688
(151) 28.03.2011.
(540)

Camelight

(732) CAMELION BATTERY CO., LTD.
(511) 09 11

(111) 1073689
(151) 28.03.2011.
(540)

MO&Co.

(732) EPO FASHION CO.,LTD.
(511) 25

(111) 1073693
(151) 13.01.2011.
(540)

RESINEX

(732) RAVAGO S.A.
(511) 01 16 17 19 35 39 40 42

(111) 1073694
(151) 13.01.2011.
(540)

ULTRAPOLYMERS

(732) RAVAGO S.A.
(511) 01 16 17 19 35 39 40 42

(111) 1073695
(151) 18.01.2011.
(540)

RAVAGO

(732) RAVAGO S.A.
(511) 01 16 17 19 35 39 40 42

(111) 1073714
(151) 24.02.2011.
(540)

Mercator Minute

(732) POSLOVNI SISTEM MERCATOR, d.d.
(511) 29 30 31 32 33

(111) 1073719
(151) 21.08.2010.
(540)

FLAŠKA

(732) 4 VIVUS d.o.o.
(511) 21 32 40

(111) 1073720
(151) 26.08.2010.
(540)

(732) Verband der Deutschen Dental-Industrie e.V.
(511) 09 16 35 36 41 42 44 45

(111) 1073722
(151) 06.10.2010.
(540)

ELECTRAWINDS

(732) ELECTRAWINDS, naamloze vennootschap
(511) 35 37 39 40 42

(111) 1073725
(151) 27.12.2010.
(540)

VAPORMATIC

(732) The VAPORMATIC Co. Ltd.
(511) 01 02 03 04 06 07 08 09 11

(111) 1073727
(151) 04.11.2010.
(540)

(732) KEMAL BOZOGLU
(511) 35 41 43 44

(111) 1073731
(151) 02.12.2010.
(540)

(732) Tristar Europe B.V.
(511) 09 14

(111) 1073735
(151) 20.12.2010.
(540)

Apolea

(732) dm-drogerie markt GmbH + Co. KG
(511) 03 05 10 29 30 32

(111) 1073740
(151) 14.01.2011.
(540)

(732) EUROCAF S.N.C. DI TUBERGA A. & C.
(511) 30

(111) 1073745
(151) 01.02.2011.
(540)

(732) ZIPPO Lifts GmbH
(511) 06 07 08 12

(111) 1073751
(151) 15.02.2011.
(540)

DULCOACTIF

(732) Boehringer Ingelheim International GmbH
(511) 05 29 30

(111)
(151) 09.02.2011.
(540)

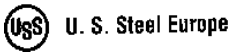

(732) U.S. Steel Košice, s.r.o.
(511) 04 06 11

(111) 1073788
(151) 09.02.2011.
(540)

INTRUM JUSTITIA

(732) Intrum Justitia Sverige AB
(511) 35 36 41 45

(111) 1073792
(151) 07.04.2011.
(540)

ODDKA

(732) WYBOROWA S.A.
(511) 33

(111) 1073797
(151) 18.02.2011.
(540)

(732) PARK GIDA VE MEŞRUBAT SANAYİİ VE TİCARET ANONİM ŞİRKETİ
(511) 29 32 33 34

(111) 1073802
(151) 19.10.2010.
(540)

4EE

(732) Bosch Rexroth AG
(511) 06 07 09 11 12 20 38 42

(111) 1073814
(151) 03.08.2010.
(540)

Axel Springer

(732) Axel Springer AG
(511) 09 14 16 18 21 24 25 28 35 36 37 38 39 40 41 42 43 45

(111) 1073815
(151) 28.12.2010.
(540)

Exte

(732) EXTE-Extrudertechnik GmbH
(511) 06 07 17 19 20 24

(111) 1073837
(151) 28.03.2011.
(540)

BIMILK

(732) Industrija za mleko, mlecni proizvodi i sokovi "Mlekara" Akcionersko drustvo
(511) 29 30

(111) 1073838
(151) 28.03.2011.
(540)

BIFRUIT

(732) Industrija za mleko, mlecni proizvodi i sokovi akcionersko drustvo MLEKARA Bitola
(511) 31 32

(111) 1073847
(151) 28.10.2010.
(540)

EFISEN

(732) S.C. SOLACIUM PHARMA S.R.L.
(511) 05

(111) 1073855
(151) 05.04.2011.
(540)

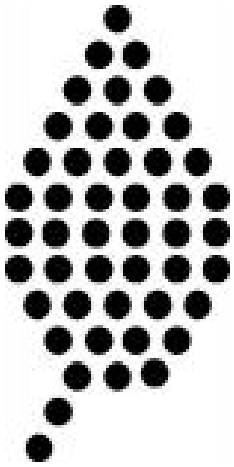

(732) Koninklijke Philips Electronics N.V.
(511) 11 30

(111) 1073869
(151) 23.06.2010.
(540)

(732) BRACCO IMAGING S.p.A.
(511) 10

(111) 1073875
(151) 10.11.2010.
(540)

(732) EXPRESSGLASS - VIDROS PARA VIATURAS, S.A.
(511) 37

(111) 1073877
(151) 12.11.2010.
(540)

(732) DOBA Fakulteta za uporabne poslovne in družbene študije Maribor
(511) 35 36 41 42

(111) 1073895
(151) 23.02.2011.
(540)

Virtual Conductor

(732) Siemens Aktiengesellschaft
(511) 09 12

(111) 1073899
(151) 27.01.2011.
(540)

DYMISTA

(732) Meda AB
(511) 05 10

(111) 1073903
(151) 14.02.2011.
(540)

(732) ChM Spółka z ograniczoną odpowiedzialnościa
(511) 10

(111) 1073912
(151) 08.03.2011.
(540)

(732) Tivu' S.R.L.
(511) 09 16 35 38 41

(111) 1073915
(151) 28.03.2011.
(540)

Great Wall

(732) Great Wall Motor Company Limited
(511) 37

(111) 1073925
(151) 08.03.2011.
(540)

(732) Henkel AG & Co. KGaA
(511) 01 17 19

(111) 1073926
(151) 28.02.2011.
(540)

(732) İPEK İDROFİL PAMUK SANAYİ VE TİCARET ANONİM ŞİRKETİ
(511) 03

(111) 1073930
(151) 28.02.2011.
(540)

VITROSS

(732) "SteelEnamel" Ltd
(511) 08 11 21 31 43

(111) 1073949
(151) 09.03.2011.
(540)

be.bag

(732) Herlitz PBS Aktiengesellschaft Papier-, Büro- und Schreibwaren
(511) 09 16 18

(111) 1073951
(151) 06.08.2010.
(540)

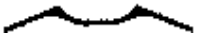

(732) GEOX S.P.A.
(511) 18 24 25 35

(111) 1073979
(151) 25.03.2011.
(540)

(732) IMPERIAL S.p.A.
(511) 25

(111) 1073980
(151) 22.03.2011.
(540)

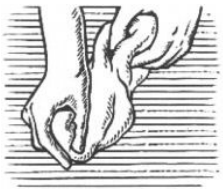

(732) Barilla G. e R. Fratelli - Società per Azioni
(511) 29 30 31 32 33 35 41 43

(111) 1073981
(151) 18.03.2011.
(540)

eni I-ride

(732) Eni S.p.A.
(511) 04

(111) 1073983
(151) 18.03.2011.
(540)

(732) Barilla G. e R. Fratelli - Società per Azioni
(511) 29 30 31 32 35 41 42

(111) 1073984
(151) 18.03.2011.
(540)

(732) Barilla G. e R. Fratelli - Società per Azioni
(511) 29 30 31 32 35 41 42

(111) 1073986
(151) 18.03.2011.
(540)

(732) Barilla G.e R. Fratelli - Società per Azioni
(511) 29 30 31 32 35 41 42

(111) 1074008
(151) 28.03.2011.
(540)

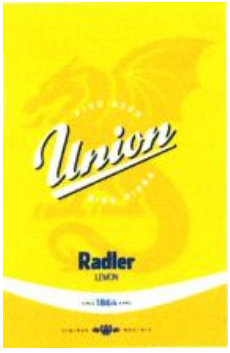

(732) Pivovarna Union d.d.
(511) 32 35 39

(111) 1074063
(151) 17.03.2011.
(540)

BRA-VO

(732) MANTION
(511) 06 07

(111) 1074101
(151) 05.10.2010.
(540)

EADS

(732) EADS Deutschland GmbH
(511) 36

(111) 1074103
(151) 20.09.2010.
(540)

(732) HB KUYUMCULUM MÜCEVHERAT TEKSTİL MAKİNA İTHALAT İHRACAT SANAYİ TİCARET LIMITED SIRKETI
(511) 14 35

(111) 1074104
(151) 14.10.2010.
(540)

(732) O2 Holdings Limited
(511) 09 38 41 42

(111) 1074106
(151) 28.09.2010.
(540)

(732) S & T System Integration & Technology Distribution AG
(511) 09 10 16 35 36 37 38 41 42

(111) 1074110
(151) 11.10.2010.
(540)

(732) "DUKAT" d.o.o. za trgovinu, Banja Luka
(511) 03

(111) 1074130
(151) 15.12.2010.
(540)

(732) VROOAM Lubricants Holding B.V.
(511) 01 02 03 04 07 12

(111) 1074136
(151) 20.12.2010.
(540)

(732) Strube Research GmbH & Co. KG
(511) 16 31 35 42 44

(111) 1074143
(151) 04.01.2011.
(540)

(732) DKV EURO SERVICE GmbH & Co. KG
(511) 16 35 36 41 42 45

(111) 1074144
(151) 19.01.2011.
(540)

(732) August Storck KG
(511) 01 02 03 05 29 30 42

(111) 1074146
(151) 06.01.2011.
(540)

(732) DKV EURO SERVICE GmbH & Co. KG
(511) 04 16 35 36 37 38 39 41 42 45

(111) 1074148
(151) 09.01.2011.
(540)

MOS MOBILITY OUTSOURCING SERVICE

(732) DKV EURO SERVICE GmbH & Co. KG
(511) 04 16 35 36 37 38 39 41 42 45

(111) 1074150
(151) 23.12.2010.
(540)

(732) Otkrytoe Aktsionernoe Obschestvo Kompania "May"
(511) 30

(111) 1074202
(151) 08.03.2011.
(540)

(732) Schneider Schreibgeräte GmbH
(511) 16

(111) 1074209
(151) 28.03.2011.
(540)

(732) Industrija za mleko, mlecni proizvodi i sokovi akcionersko drustvo MLEKARA Bitola
(511) 29 30 35 39 43

(111) 1074210
(151) 28.03.2011.
(540)

(732) Pivovarna Union d.d.
(511) 32 35 39

(111) 1074216
(151) 25.03.2011.
(540)

LOGIC DESIGN

(732) LOGIC DESIGN
(511) 16 35 42

(111) 1074217
(151) 25.03.2011.
(540)

(732) FIAS-S.R.L.
(511) 09

(111) 1074259
(151) 05.04.2011.
(540)

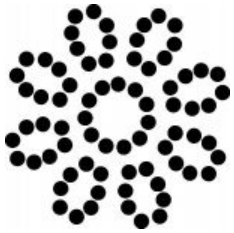

(732) Koninklijke Philips Electronics N.V.
(511) 11 30

(111) 1074260
(151) 05.04.2011.
(540)

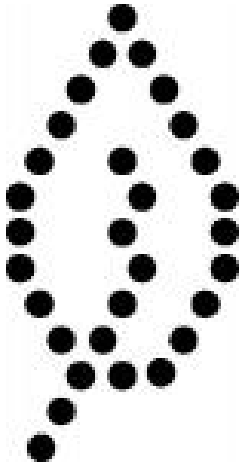

(732) Koninklijke Philips Electronics N.V.
(511) 11 30

(111) 1074261
(151) 05.04.2011.
(540)

(732) Koninklijke Philips Electronics N.V.
(511) 11 30

(111) 1074262
(151) 04.04.2011.
(540)

GRAAL

(732) Pearl Luxury Group SA
(511) 14 18 35

(111) 1074266
(151) 18.08.2010.
(540)

SUPERONLINE

(732) TELLCOM ILETI Þ IM HIZMETLERI ANONIM Þ IRKETI
(511) 09 14 16 18 21 25 35 37 38 42

(111) 1074281
(151) 09.03.2011.
(540)

be bag

(732) Herlitz PBS Aktiengesellschaft Papier-, Büro- und Schreibwaren
(511) 09 16 18

(111) 1074283
(151) 11.02.2011.
(540)

krok ebooks

(732) Nathalie Löffler
(511) 09 16 35 41

(111) 1074298
(151) 04.02.2011.
(540)

StarTrack

(732) GfK Retail and Technology GmbH
(511) 09 35 38 42

(111) 1074305
(151) 17.09.2010.
(540)

WE STYLE TASTE

(732) OOO "Planeta spetsiy"
(511) 29 30

(111) 1074307
(151) 25.11.2010.
(540)

COEY

(732) Beijing Xindijia Trade Co., Ltd.
(511) 25

(111) 1074329
(151) 24.01.2011.
(540)

HG HELIOS Group

(732) HELIOS sestavljeno podjetje za kapitalske nalo ? be in razvoj, d.d.
(511) 01 02 04 05 16 17 19

(111) 1074379
(151) 06.04.2011.
(540)

(732) Digium, Inc.
(511) 09 42

(111) 1074380
(151) 25.03.2011.
(540)

SBP urban lighting

(732) PERFORMANCE IN LIGHTING S.P.A.
(511) 11

(111) 1074382
(151) 02.03.2011.
(540)

tivù sat

(732) Tivu' S.R.L.
(511) 09 16 35 38 41

(111) 1074395
(151) 20.01.2011.
(540)

EXPRESS

(732) Express, LLC
(511) 03 09 14 18 25 26 35

(111) 1074397
(151) 17.11.2010.
(540)

ELSEVIER

(732) Elsevier BV
(511) 09 16 41

(111) 1074405
(151) 20.01.2011.
(540)

OIS
Oscillating Interface System

(732) Robert Bosch GmbH
(511) 03 07 08

(111) 1074424
(151) 23.07.2010.
(540)

Mobivia GROUPE

(732) MOBIVIA GROUPE
(511) 09 12 16 35 36 37 38 39 40 41 42 45

(111) 1074425
(151) 28.03.2011.
(540)

Jaffa nectar

(732) KOKTEL-TREJD D.O.
(511) 32

(111) 1074445
(151) 18.03.2011.
(540)

DEANDRA

(732) RICHTER GEDEON NYRT.
(511) 05

(111) 1074446
(151) 18.03.2011.
(540)

EDESIA

(732) RICHTER GEDEON NYRT.
(511) 05

(111) 1074447
(151) 18.03.2011.
(540)

FLORINELLA

(732) RICHTER GEDEON NYRT.
(511) 05

(111) 1074453
(151) 15.03.2011.
(540)

TERATE

(732) INVISTA Technologies S.à.r.l.
(511) 01

(111) 1074454
(151) 18.03.2011.
(540)

DIAREBLOC

(732) RICHTER GEDEON NYRT.
(511) 05

(111) 1074455
(151) 18.03.2011.
(540)

SOFTELLE

(732) RICHTER GEDEON NYRT.
(511) 05

(111) 1074456
(151) 18.03.2011.
(540)

GILLIAN

(732) RICHTER GEDEON NYRT.
(511) 05

(111) 1074457
(151) 18.03.2011.
(540)

JOCELYN

(732) RICHTER GEDEON NYRT.
(511) 05

(111) 1074458
(151) 18.03.2011.
(540)

AGARTHA

(732) RICHTER GEDEON NYRT.
(511) 05

(111) 1074501
(151) 28.02.2011.
(540)

Techem Smart System

(732) Techem Energy Services GmbH
(511) 09 38

(111) 1074508
(151) 23.01.2011.
(540)

GREE

(732) GREE ELECTRIC APPLIANCES, INC. OF ZHUHAI
(511) 11

(111) 1074531
(151) 28.02.2011.
(540)

(732) IP Worldwide Establishment
(511) 21 32 33

(111) 1074583
(151) 03.03.2011.
(540)

(732) DUKAT d.d.
(511) 29

(111) 1074585
(151) 18.11.2010.
(540)

INTEROUTE

(732) Interoute Communications Limited
(511) 09 37 38 42

(111) 1074592
(151) 02.11.2010.
(540)

TBR

(732) Euro 07 AD
(511) 12 37 39

(111) 1074594
(151) 02.12.2010.
(540)

Shine & Dry

(732) BSH Bosch und Siemens Hausgeräte GmbH
(511) 07 09 11

(111) 1074608
(151) 24.12.2010.
(540)

JACK PİERRE

(732) CSF KUYUMCULUK İTHALAT İHRACAT SANAYİ VE TİCARET LİMİTED ŞİRKETİ
(511) 14

(111) 1074609
(151) 24.12.2010.
(540)

Loja's

(732) CSF KUYUMCULUK İTHALAT İHRACAT SANAYİ VE TİCARET LİMİTED ŞİRKETİ
(511) 14

(111) 1074613
(151) 20.01.2011.
(540)

KASPERSKY lab

(732) Kaspersky Lab ZAO
(511) 09 16 35 42

(111) 1074627
(151) 22.02.2011.
(540)

la fabbrica

(732) LA FABBRICA S.p.A.
(511) 19 37

(111) 1074635
(151) 01.04.2011.
(540)

THORNE RESEARCH

(732) Thorne Research, Inc.
(511) 05

(111) 1074646
(151) 25.03.2011.
(540)

PERFORMANCE iN LIGHTiNG

(732) PERFORMANCE IN LIGHTING S.P.A.
(511) 11

(111) 1074647
(151) 25.03.2011.
(540)

Hypress

(732) I.M.M. HYDRAULICS S.P.A.
(511) 06 17 37

(111) 1074648
(151) 16.03.2011.
(540)

ARMANI Hotels & Resorts

(732) GIORGIO ARMANI S.P.A.
(511) 35

(111) 1050374
(151) 22.06.2010.
(540)

zicaffè

(732) ZICAFFE' S.P.A.
(511) 30

(111) 1074655
(151) 16.12.2010.
(540)

telepizza

(732) TELE PIZZA, S.A.
(511) 30 35 43

(111) 1074698
(151) 09.02.2011.
(540)

LBM

(732) COPAN ITALIA S.P.A.
(511) 09

(111) 1074699
(151) 09.02.2011.
(540)

FLOQSWABS

(732) COPAN ITALIA S.P.A.
(511) 09

(111) 1074700
(151) 16.03.2011.
(540)

(732) Fédération Internationale de Volleyball
(511) 03 09 12 14 16 18 21 24 25 27 28 30 32 35 36 37 38 39 41 43

(111) 1074706
(151) 17.12.2010.
(540)

(732) ArsRatio Holding GmbH
(511) 06 19 35 42

(111) 1074708
(151) 19.11.2010.
(540)

(732) Euronics G.E.I.E.
(511) 07 09 11 35 36 37

(111) 1074709
(151) 07.03.2011.
(540)

ASPIRE

(732) Avon Products, Inc.
(511) 03

(111) 1074727
(151) 07.04.2011.
(540)

(732) 4SeasonsSpa B.V.
(511) 11 35

(111) 1074739
(151) 04.03.2011.
(540)

(732) JAMNICA d.d.
(511) 05 32

(111) 1074740
(151) 07.10.2010.
(540)

(732) RCL INT. D.O.O.
(511) 09 35 41 42

(111) 1074766
(151) 22.09.2010.
(540)

PLAYING FOR CHANGE

(732) Stiftelsen Playing for Change
(511) 16 25 35 36 41 42 44 45

(111) 1074768
(151) 12.09.2010.
(540)

(732) Tish & Snooky's N.Y.C. Inc.
(511) 03 25 26 35 44

(111) 1074801
(151) 27.01.2011.
(540)

(732) MADOKA Handelsges.m.b.H.
(511) 03 05 10 30 32 41 43 44

(111) 1074808
(151) 01.03.2011.
(540)

AVON IDEAL FLAWLESS

(732) Avon Products, Inc.
(511) 03

(111) 1074813
(151) 18.03.2011.
(540)

(732) BEAUTE PRESTIGE INTERNATIONAL
(511) 03

(111) 1074830
(151) 25.03.2011.
(540)

ALFA ROMEO 4C

(732) FIAT GROUP AUTOMOBILES S.P.A.
(511) 12 25 28

(111) 1074833
(151) 14.03.2011.
(540)

(732) GIANOLA CARLO di Gianola Paolo
(511) 08

(111) 1074841
(151) 11.04.2011.
(540)

(732) TAIDEN INDUSTRLAL CO., LTD
(511) 09

(111) 1074850
(151) 14.04.2011.
(540)

(732) JUST Deutschland GmbH
(511) 03 05

(111) 1074862
(151) 09.02.2011.
(540)

(732) PARK GIDA VE MEŞRUBAT SANAYİİ VE TİCARET ANONİM ŞİRKETİ
(511) 32 33 34

(111) 1074867
(151) 28.03.2011.
(540)

(732) Industrija za mleko, mlecni proizvodi i sokovi "Mlekara" Akcionersko drustvo
(511) 30 32 35 39 43

(111) 1074868
(151) 16.12.2010.
(540)

(732) HUGO BOSS Trade Mark Management GmbH & Co. KG
(511) 03 09 14 18 25 35 42

(111) 1074870
(151) 04.02.2011.
(540)

MEDLEY

(732) BOĞAZİÇİ SİGARA VE TÜTÜNCÜLÜK SANAYİ VE TİCARET ANONIM ŞİRKETİ
(511) 34

(111) 1074871
(151) 04.02.2011.
(540)

HAZAR

(732) BOĞAZİÇİ SİGARA VE TÜTÜNCÜLÜK SANAYİ VE TİCARET ANONIM ŞİRKETİ
(511) 34

(111) 1074873
(151) 22.10.2010.
(540)

(732) SEBA DIS TICARET VE NAKLİYAT ANONİM ŞİRKETİ
(511) 03 34

(111) 1074882
(151) 01.03.2011.
(540)

(732) GE.MA.R SRL
(511) 28

(111) 1074891
(151) 06.04.2011.
(540)

CHOKO-WOKO

(732) Dotchirne pidpriemstvo "Konditerska korporatzia "Roshen"
(511) 30

(111) 1074897
(151) 22.11.2010.
(540)

BIG BANG

(732) Big Bang, trgovina in storitve, d.o.o.
(511) 07 08 09 11 15 16 35 40 41

(111) 1074901
(151) 09.12.2010.
(540)

(732) "EkoSan" d.o.o. Banja Luka
(511) 25

(111) 1074907
(151) 06.12.2010.
(540)

(732) BATIÇİM ENERJİ ELEKTRİK ÜRETİM ANONİM ŞİRKETİ
(511) 40

(111) 1074912
(151) 24.12.2010.
(540)

(732) ATİKER METAL İTHALAT İHRACAT VE İMALAT SANAYİ TİCARET ANONİM ŞİRKETİ
(511) 06 07 09

(111) 1074924
(151) 22.02.2011.
(540)

(732) C.I.A.K. d.o.o. za proizvodnju, unutarnju i vanjsku trgovinu, zastupanje i uluge
(511) 09

(111) 1074928
(151) 18.03.2011.
(540)

(732) Develey Holding GmbH & Co. Beteiligungs KG
(511) 29 30 32

(111) 1074932
(151) 03.02.2011.
(540)

ADONIS: COMMUNITY

(732) BOC Information Technologies Consulting AG
(511) 09 35 42

(111) 1074940
(151) 23.03.2011.
(540)

РЕНЕОС

(732) Zentiva, k.s.
(511) 05

(111) 1074943
(151) 31.03.2011.
(540)

MOXEZA

(732) Alcon, Inc.
(511) 05

(111) 1074944
(151) 22.03.2011.
(540)

OPTIFOG

(732) ESSILOR INTERNATIONAL (COMPAGNIE GENERALE D'OPTIQUE)
(511) 03 09

(111) 1074960
(151) 28.02.2011.
(540)

UC INTELLIGENT CORE

(732) Polycom, Inc.
(511) 09 38

(111) 1074966
(151) 31.03.2011.
(540)

ТАНИЗ ЭРАС

(732) KRKA, tovarna zdravil, d.d., Novo mesto
(511) 05

(111) 1074967
(151) 31.03.2011.
(540)

PYADIAB

(732) KRKA, tovarna zdravil, d.d., Novo mesto
(511) 05

(111) 1074968
(151) 06.04.2011.
(540)

STARIBA

(732) Janssen Pharmaceutica NV
(511) 05

(111) 1074969
(151) 06.04.2011.
(540)

KAZELIS

(732) Janssen Pharmaceutica NV
(511) 05

(111) 1074970
(151) 07.04.2011.
(540)

RELTIGA

(732) Janssen Pharmaceutica NV
(511) 05

(111) 1074986
(151) 21.03.2011.
(540)

Heart Failure Congress

(732) SOCIETE EUROPEENNE DE CARDIOLOGIE
(511) 35 38 41 42

(111) 1074987
(151) 22.03.2011.
(540)

EuroPRevent Congress

(732) SOCIETE EUROPEENNE DE CARDIOLOGIE
(511) 35 38 41 42

(111) 1075017
(151) 25.03.2011.
(540)

TERRE DEGLI EREMI

(732) MIP METRO Group Intellectual Property GmbH & Co. KG
(511) 33

(111) 1075025
(151) 11.08.2010.
(540)

SKY-HI

(732) DELUXE MARKETING INDUSTRIES LIMITED
(511) 32

(111) 1075028
(151) 27.10.2010.

(540)

SDD

(732) Schuler Pressen GmbH & Co. KG
(511) 06 07

(111) 1075059
(151) 17.02.2011.
(540)

(732) PERKOVIC ALEXANDRE
(511) 14 16 18 21 25 33 35

(111) 1075065
(151) 15.03.2011.
(540)

CROISSOMAT

(732) Rondo Burgdorf AG
(511) 07

(111) 1075079
(151) 18.03.2011.
(540)

(732) AZIENDA OLEARIA DEL CHIANTI S.r.l.
(511) 29 39

(111) 1075094
(151) 16.07.2010.
(540)

(732) FACEBOOK UK LTD
(511) 09 35 36 38 41 42 45

(111) 1075095
(151) 17.02.2011.
(540)

(732) DECATHLON
(511) 09 18 25 28 35 41

(111) 1075098
(151) 11.01.2011.

(540)

TURTLE

(732) Fruit Security GmbH Montaggio da Leiner GmbH
(511) 06 19 37

(111) 1075101
(151) 03.02.2011.
(540)

(732) Zentiva, k.s.
(511) 05

(111) 1075104
(151) 24.03.2011.
(540)

(732) LRC Products Limited
(511) 05 10

(111) 1075113
(151) 21.01.2011.
(540)

dm, weil

(732) dm-drogerie markt GmbH + Co. KG
(511) 35 36 41

(111) 1075129
(151) 09.10.2010.
(540)

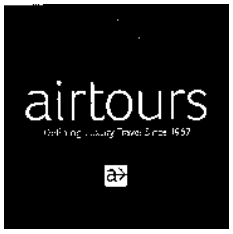

(732) TUI AG
(511) 09 14 16 18 24 25 28 36 39 41 43

(111) 1075142
(151) 08.03.2011.

(540)

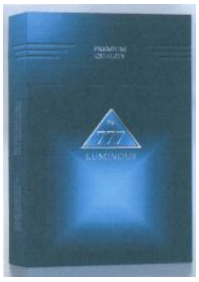

(732) ALIDA Ltd.
(511) 34

(111) 1075148
(151) 28.03.2011.
(540)

ERIC FAVRE

(732) D.B.W.
(511) 03 09 14 16 18 24 25 28 35 41 43 44

(111) 1075176
(151) 04.04.2011.
(540)

miss fashion and freedom

(732) RUOZZI Stefano
(511) 41

(111) 1075179
(151) 10.06.2010.
(540)

(732) Al Telekom Austria Aktiengesellschaft
(511) 09 16 28 35 36 37 38 40 41 42 45

(111) 1075191
(151) 28.03.2011.
(540)

(732) Bayer Aktiengesellschaft
(511) 05

(111) 1075208
(151) 20.01.2011.
(540)

(732) DONGFENG YUAN (WUHAN) VEHICLE CO., LTD.
(511) 12 37

(111) 1075210
(151) 25.03.2010.
(540)

PÖPPELMANN

(732) Pöppelmann Holding GmbH & Co. KG
(511) 07 09 10 11 12 16 17 20 21 40 42

(111) 1075213
(151) 17.03.2011.
(540)

ROVELOX

(732) Lanxess Distribution GmbH
(511) 31

(111) 1075223
(151) 07.02.2011.
(540)

CUBY

(732) OSRAM Gesellschaft mit beschränkter Haftung
(511) 11

(111) 1075225
(151) 08.02.2011.
(540)

(732) "Gazpromneft - lubricants" Ltd
(511) 01 04

(111) 1075234
(151) 28.10.2010.
(540)

HIGH FLIER

(732) Lodestar Anstalt (a Liechtenstein company)
(511) 34

(111) 1075244
(151) 16.12.2010.

(540)

(732) DRUŽSTEVNÍ ZÁVODY DRAŽICE - STROJÍRNA s.r.o.
(511) 11

(111) 1075258
(151) 04.04.2011.
(540)

10K100

(732) Cosmedico Licht GmbH
(511) 10 11

(111) 1075259
(151) 04.04.2011.
(540)

(732) Zweibrüder Optoelectronics GmbH
(511) 09 11

(111) 1075269
(151) 13.04.2011.
(540)

OMNISWITCH

(732) ALCATEL-LUCENT USA INC.
(511) 09

2. Накнадна назначења за Републику Србију (Subsequant designations for Republic of Serbia)

(111) 1007222
(540)

(732) Sandler Systems, Inc.
(511) 41

(111) 1008961
(540)

(732) HANGZHOU HENGXIN IMP & EXP CO., LTD.
(511) 25

(111) 1022989
(540)

ГРОПРИНОСИН

(732) GEDEON RICHTER POLSKA Sp. z o.o.
(511) 05

(111) 1024167
(540)

(732) ESSILOR INTERNATIONAL (COMPAGNIE GENERALE D'OPTIQUE)
(511) 05 07 09 10 35 38 40 42 44

(111) 1038474
(540)

(732) Camuto Consulting, Inc.
(511) 09 14 18 25 35

(111) 1039768
(540)

(732) Bayerische Motoren Werke Aktiengesellschaft
(511) 36

(111) 1050764
(540)

HOLLISTER

(732) Abercrombie & Fitch Europe SA
(511) 03 09 14 16 18 24 28 32 35 41

(111) 626767
(540)

GROPRINOSIN

(732) GEDEON RICHTER POLSKA Sp. z o.o.
(511) 05

(111) 769657
(540)

ALPHERA

(732) Bayerische Motoren Werke Aktiengesellschaft
(511) 36

(111) 785984
(540)

(732) Altınbaşak Tekstil Sanayi ve Ticaret Anonim Şirketi
(511) 24

(111) 835923
(540)

(732) KIKU Srl-GmbH
(511) 31

(111) 877023
(540)

Lodotra

(732) Horizon Pharma AG
(511) 05

(111) 880441
(540)

(732) PRYSMIAN CAVI E SISTEMI ENERGIA S.R.L.
(511) 09 37 38 39

(111) 921108
(540)

Sandlerworks!

(732) Sandler Systems, Inc.
(511) 41

(111) 928459
(540)

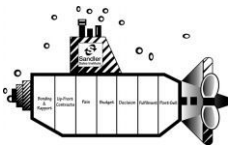

(732) Sandler Systems, Inc.
(511) 41

(111) 939495
(540)

(732) SİLKAR MADENCİLİK SANAYI VE TİCARET ANONİM ŞİRKETİ
(511) 19

(111) 940586
(540)

JALUPRO

(732) Professional Dietetics srl
(511) 03

(111) 956254
(540)

ACTECO

(732) Chery Automobile Co., Ltd
(511) 12 37

(111) 959096
(540)

(732) Sandler Systems, Inc.
(511) 41

(111) 959097
(540)

(732) Sandler Systems, Inc.
(511) 41

(111) 1012460
(540)

(732) Angel Yeast Co., Ltd.
(511) 01

(111) 1047143
(540)

Bioversal

(732) KARNA-BIOCHEMIE GmbH
(511) 01 03 37 40

(111) 1054955
(540)

OMG

(732) Leder & Schuh International AG
(511) 18 25 35

(111) 1064443
(540)

TEKAMLO

(732) NOVARTIS AG
(511) 05

(111) 693081
(540)

(732) GAVRILYUK Valery
(511) 11 37

(111) 762740
(540)

IBALGIN

(732) Zentiva, k.s.
(511) 01 03 05

(111) 821521
(540)

WhiteBooster

(732) Henkel AG & Co. KGaA
(511) 03 05 21

(111) 889519
(540)

(732) ZHONGSHAN OPPLE LIGHTING CO., LTD.
(511) 09 11

(111) 908925
(540)

INTRUM

(732) Intrum Justitia Licensing AG
(511) 35 36 42

(111) 928775
(540)

RAPYDAN

(732) Vida Alegria BV
(511) 05

(111) 992804
(540)

AFTER HOURS

(732) Lodestar Anstalt
(511) 34

(111) 1039598
(540)

(732) N.V. Nutricia
(511) 05

(111) 1056218
(540)

(732) FIFPro Commercial Enterprises B.V.
(511) 28 35 36 41 45

(111) 1059653
(540)

(732) Koninklijke Philips Electronics N.V.
(511) 09 38

(111) 1060160
(540)

LYSTEDA

(732) Ferring B.V.
(511) 05

(111) 1064072
(540)

FIFPro

(732) FIFPro Commercial Enterprises B.V.
(511) 28 35 36 41 45

(111) 854220
(540)

INTEROX

(732) SOLVAY (SOCIÉTÉ ANONYME)
(511) 01 03 05

(111) 939823
(540)

DERACINE

(732) BİOTA BİTKİSEL İLAÇ VE KOZMETİK LABORATUARLARI A.Ş.
(511) 03

(111) 966939
(540)

bioblas

(732) BİOTA BİTKİSEL İLAÇ VE KOZMETİK LABORATUARLARI A.Ş.
(511) 03

(111) 1005939
(540)

IMZIG

(732) Ares Trading S.A.
(511) 05

(111) 1005940
(540)

TRAXIP

(732) Ares Trading S.A.
(511) 05

(111) 1011123
(540)

ENERGY GLOBE

(732) NEET GmbH
(511) 06 14 35 41 42

(111) 1016713
(540)

(732) GRUPA LOTOS SPÓŁKA AKCYJNA
(511) 01 02 03 04

(111) 1017620
(540)

(732) TIA (GB) LIMITED
(511) 12

(111) 1027392
(540)

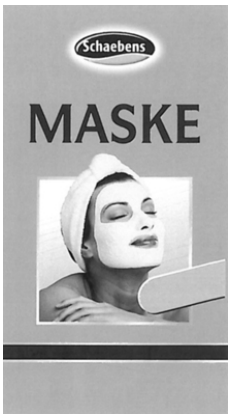

(732) Haus Schaeben GmbH & Co. KG
(511) 03

(111) 1035640
(540)

GLOBRUSH

(732) Church & Dwight Co., Inc.
(511) 21

(111) 1047296
(540)

(732) Robert Bosch GmbH
(511) 35 36 37 41

(111) 1056899
(540)

(732) PureCircle SDN BHD
(511) 01 05 30 42

(111) 561484
(540)

ORBIS Dental

(732) ORBIS Dental Handelsgesellschaft mbH
(511) 01 03 05 10 20

(111) 634338
(540)

(732) CONSORZIO TUTELA PROVOLONE VALPADANA
(511) 29

(111) 767528
(540)

MIZANI

(732) L'OREAL
(511) 03

(111) 812757
(540)

GANCIA

(732) F.LLI GANCIA & C. S.p.A.
(511) 33

(111) 846468
(540)

ARBIDOL

(732) Public Joint Stock Company "Pharmstandard"
(511) 05

(111) 906915
(540)

LATTISSIMA

(732) Société des Produits Nestlé S.A.
(511) 11

(111) 934968
(540)

SMH

(732) RUAN CO., LTD
(511) 03 26

(111) 962626
(540)

AquaVallis

(732) HTZ Velenje, I.P., d.o.o.
(511) 07 11 37

(111) 966633
(540)

ECOsine

(732) Schaffner Holding AG
(511) 09

(111) 1020077
(540)

(732) Dotchirne pidpriemstvo "Konditerska korporatzia "Roshen"
(511) 30

(111) 1022391
(540)

WinCare
-complete care of your turbines-

(732) Winwind Oy
(511) 07 09 37 42

(111) 1026242
(540)

(732) Comité International Olympique
(511) 01 02 03 04 05 06 07 08 09 10 11 12 13 14 15 16 17 18 19 20 21 22 23 24 25 26 27 28 29 30 31 32 33 34 35 36 37 38 39 40 41 42 43 44 45

(111) 1038563
(540)

Crazy Bee

(732) Dotchirne pidpriemstvo "Konditerska korporatzia "Roshen"
(511) 30

(111) 1047006
(540)

stevia
PureCircle

(732) PureCircle SDN BHD
(511) 30

(111) 1054256
(540)

ENI I-SINT

(732) ENI S.p.A.
(511) 04

(111) 1056381
(540)

PROVOKANT

(732) LATELTIN AG
(511) 32 33

(111) 1060248
(540)

MONIX

(732) PINTI ESPAÑA, S.A.
(511) 08 21

(111) 751230
(540)

ColorExpress

(732) Deutsche Amphibolin-Werke von Robert Murjahn Stiftung & Co KG
(511) 02 07 19

(111) 798028
(540)

Garize

(732) GARIZE TEKSTIL URUNLERI SANAYI IC VE DIS TICARET ANONIM SIRKETI
(511) 25 35

(111) 841091
(540)

CARTONDRUCK

(732) CD Cartondruck AG
(511) 16 42

(111) 867928
(540)

EXTORY

(732) HUNCA KOZMETİK SANAYİ ANONİM ŞİRKETİ
(511) 03

(111) 989708
(540)

TROPICO

(732) CAFES FOLLIET
(511) 32

(111) 1002325
(540)

PONZIO

(732) PONZIO SUD S.r.l.
(511) 06 19 37

(111) 1025790
(540)

MURATTI

(732) Philip Morris Products S.A.
(511) 34

(111) 1050003
(540)

KRİSTAL
DAVETİYE

(732) İKİNCİLER MATBAACILIK SANAYİ VE TİCARET LİMİTED ŞİRKETİ
(511) 16

(111) 1059445
(540)

VASTAS

(732) VASTAŞ VALF ARMATÜR SANAYİ TİCARET ANONİM ŞİRKETİ
(511) 06 07

(111) 717886
(540)

SALAMANDER

(732) Salamander Industrie-Produkte GmbH
(511) 01 17 18 19

(111) 848765
(540)

(732) HUNCA KOZMETİK SANAYİ ANONİM ŞİRKETİ
(511) 03

(111) 849244
(540)

VICETIN ВИЦЕТИН

(732) AKTSIONERNO DROUJESTVO "SOPHARMA"
(511) 05

(111) 872393
(540)

KEMILINE

(732) KEMİTEKS KİMYA SANAYİ VE TİCARET ANONİM ŞİRKETİ
(511) 01 02

(111) 889050
(540)

PİGMAPOL

(732) KEMİTEKS KİMYA SANAYİ VE TİCARET ANONİM ŞİRKETİ
(511) 02

(111) 938106
(540)

(732) BİM BİRLEŞİK MAĞAZALAR ANONİM ŞİRKETİ
(511) 35

(111) 943704
(540)

(732) The Pier Holding ehf
(511) 04 20 21 24 27 35

(111) 943705
(540)

THE PIER

(732) The Pier Holding ehf
(511) 04 20 21 24 27 35

(111) 987441
(540)

EBECO

(732) Ebeco Holding AB
(511) 09 11 17

(111) 1014942
(540)

(732) IRISH DISTILLERS LIMITED
(511) 33

(111) 777356
(540)

robatherm

(732) robatherm GmbH & Co. KG
(511) 11

(111) 802215
(540)

VAPIANO

(732) VAPIANO SE
(511) 29 30 33 43

(111) 854978
(540)

CLEFFEKT

(732) Lidl Stiftung & Co. KG
(511) 03 05

(111) 1068001
(540)

GLORIA JEAN'S

(732) Gloria Jean's Coffees Holdings Pty Ltd
(511) 30 35 43

(111) 1069251
(540)

(732) Gloria Jean's Coffees Holdings Pty Ltd
(511) 30 35 43

(111) 526017
(540)

IMS

(732) Internationale Möbel-Selection IMS Aktiengesellschaft
(511) 20

(111) 797256
(540)

medavis

(732) MEDAVIS Medizinische Informations Systeme GmbH
(511) 09 38 42

(111) 928847
(540)

(732) Axel Johnson AB
(511) 07 09 10 11 17 35 36 37 38 42

(111) 953567
(540)

FILTRUM

(732) Dikovskiy Vladimir Anatolievich
(511) 05

(111) 1006921
(540)

(732) PASTIFICIO SERVICE S.L.
(511) 30 35 43

(111) 1025184
(540)

(732) H&M Hennes & Mauritz AB
(511) 25 35 36

(111) 1034831
(540)

IRIDIUM

(732) Sheraton International, Inc.
(511) 44

(111) 1038245
(540)

(732) Zhejiang Leo Co., Ltd.
(511) 07

(111) 653111
(540)

HUMER

(732) SOCIETE DE DEVELOPPEMENT ET DE RECHERCHE INDUSTRIELLE
(511) 05

(111) 724838
(540)

(732) DIAMANT S.R.L.
(511) 09 12 25

(111) 872396
(540)

PIGMAPERSE

(732) KEMİTEKS KİMYA SANAYİ VE TİCARET ANONİM ŞİRKETİ
(511) 01 02

(111) 895196
(540)

KEMİTEKS

(732) KEMİTEKS KİMYA SANAYİ VE TİCARET ANONİM ŞİRKETİ
(511) 01 02

(111) 909283
(540)

OPENTOUCH

(732) ALCATEL LUCENT
(511) 09

(111) 915976
(540)

(732) H & M Hennes & Mauritz AB
(511) 03 14 25

(111) 923992
(540)

ALOFT

(732) Starwood Hotels & Resorts Worldwide, Inc.
(511) 43

(111) 929361
(540)

CONSCIOUS

(732) H & M Hennes & Mauritz AB
(511) 03 14 18 25 35

(111) 934899
(540)

(732) H & M Hennes & Mauritz AB
(511) 11 20 21 24 25 27 35

(111) 935229
(540)

(732) ZHONGSHAN OPPLE LIGHTING CO., LTD.
(511) 09 11

(111) 938711
(540)

(732) H&M Hennes & Mauritz AB
(511) 25 35

(111) 951181
(540)

(732) H&M Hennes & Mauritz AB
(511) 03 14 18 25 35

(111) 959322
(540)

(732) LI JINSONG
(511) 07

Дизајн / Designs

**Међународни кодови за идентификацију библиографских
података о дизајну према - WIPO ST. 80**

**Recommendation concerning bibliographic data
To industrial designs - WIPO ST. 80**

Регистарски број	**(11)**	Number of registration
Датум регистрације	**(15)**	Date of the registration
Број пријаве	**(21)**	Number of the application
Датум подношења пријаве	**(22)**	Date of filing of the application
Подаци о изложбеном праву првенства	**(23)**	Exhibition priority data
Број пријављеног дизајна	**(28)**	Number of industrial designs included in the application
Подаци о праву првенства на основу Париске конвенције	**(30)**	Data relating to priority under the Paris Convention
Класа и подкласа Локарнске класификације	**(51)**	Class and subclass of the Locarno Classification
Назив дизајна	**(54)**	Title of the industrial design
Име аутора дизајна	**(72)**	Name of the creator
Име и адреса носиоца права	**(73)**	Name and address of the owner
Име и адреса пуномоћника	**(74)**	Name and address of the repesentative

РЕГИСТРОВАНИ ДИЗАЈН
REGISTRATED DESIGNS

(11) 10680 **(51) 09-03**
(21) Д-76/ 2010 (15) 08.03.2011.
(22) 24.08.2010.
(30) Д-0076/2010 24.08.2010. RS
(28) 2
(54) AMBALAŽA
(73) PČELARSKA ZADRUGA "HOMOLJEMED" - Žagubica, Trg Jovana Šerbanovića br. 5, 12320 Žagubica RS
(72) TODOROVIĆ Vlada, Maršala Tita 24/9, 12320 Žagubica, RS

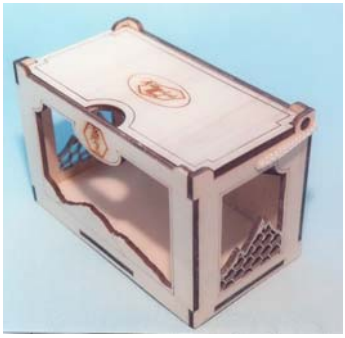

(11) 10681 **(51) 24-02**
(21) Д-7/ 2010 (15) 08.03.2011.
(22) 08.02.2010.
(30) Д-0007/2010 08.02.2010. RS
(28) 1
(54) INSTRUMENT ZA STVARANJE ŠUPLJINE U TELU PRŠLJENA
(73) STANKOVIĆ Milan, Šekspirova 3/55, 21000 Novi Sad, RS; GRUJIĆ Jovan, Đorđa Radujkova 25, 21000 Novi Sad, RS, i TABAKOVIĆ Slobodan, Momčila Tapavice 4/25, 21000 Novi Sad, RS
(72) STANKOVIĆ Milan, Šekspirova 3/55, 21000 Novi Sad, RS; GRUJIĆ Jovan, Đorđa Radujkova 25, 21000 Novi Sad, RS, i TABAKOVIĆ Slobodan, Momčila Tapavice 4/25, 21000 Novi Sad, RS

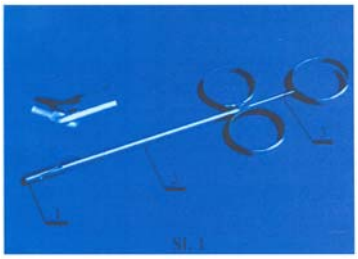

(11) 10682 **(51) 09-01**
(21) Д-95/ 2010 (15) 08.03.2011.
(22) 11.11.2010.
(30) Д-0095/2010 11.11.2010. RS
(28) 1
(54) BOCA
(73) "VODA VRNJCI" a.d., Kneza Miloša 162, 36210 Vrnjačka Banja, RS
(72) FARČIŽ Pavle, Hominid Advertising DOO, Vlajkovićeva 7, 11000 Beograd, RS
(74) BOGDANOVIĆ P. Dejan, Vlajkovićeva 28, 11000 Beograd, RS

(11) 10683 **(51) 10-05**
(21) Д-49/ 2010 (15) 08.03.2011.
(22) 28.05.2010.
(30) Д-0049/2010 28.05.2010. RS
(28) 1
(54) DISK ZA ZAŠTITU OD ZRAČENJA

(73) SHITAL Puri, Hađi Ruvimova 2, 21000 Novi Sad, RS
(72) SHITAL Puri, Hađi Ruvimova 2, 21000 Novi Sad, RS

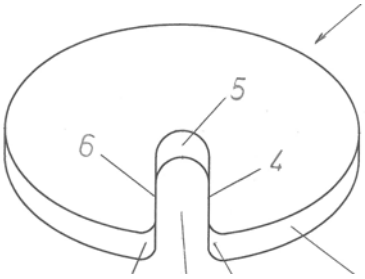

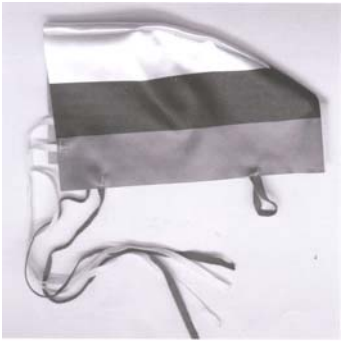

(11) 10684 **(51) 09-01**
(21) Д-2/ 2011 (15) 08.03.2011.
(22) 24.01.2011.
(30) Д -0002/2011 24.01.2011. RS
(28) 1
(54) BOCA
(73) PREDUZEĆE ZA PROIZVODNJU, PROMET I USLUGE POLIMARK DOO BEOGRAD, Autoput Beograd - Novi Sad 100 B, 11080 Beograd-Zemun, RS
(74) BOGDANOVIĆ P. Dejan, Vlajkovićeva 28, 11000 Beograd, RS

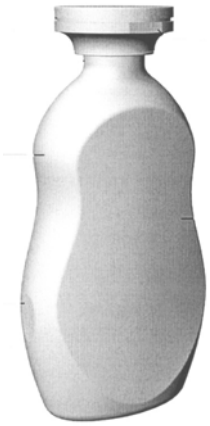

(11) 10685 **(51) 12-16**
(21) Д-9/ 2010 (15) 17.03.2011.
(22) 17.02.2010.
(30) Д -0009/2010 17.02.2010. RS
(28) 1
(54) NAVLAKA ZA SPOLJNI RETROVIZOR VOZILA
(73) PUDJA Stipo, Savska cesta 15, 10340 Vrbovec, HR
(72) PUDJA Stipo, Savska cesta 15, 10340 Vrbovec, HR
(74) MITROVIĆ Predrag, Alaska 36, 11080 Beograd – Zemun, RS

(11) 10686 **(51) 21-02**
(21) Д-61/ 2010 (15) 17.03.2011.
(22) 25.06.2010.
(30) Д -0061/2010 25.06.2010. RS
(28) 1
(54) REKVIZIT ZA SPORT I REKREACIJU
(73) TOPOLŠEK Vladimir, Ravanička 9, 11000 Beograd, RS
(72) TOPOLŠEK Vladimir, Ravanička 9, 11000 Beograd, RS

(11) 10687 **(51) 03-01**
(21) Д-63/ 2010 (15) 17.03.2011.
(22) 01.07.2010.
(30) Д -0063/2010 01.07.2010. RS
(28) 1
(54) ĐAČKA TORBA
(73) BKG Ortačka radnja, 24430 Ada, Svetozara Miletića 36, RS
(72) BENAK Zoltan, Svetozara Miletića 36, 24430 Ada, RS

(11) 10688 **(51) 09-01**
(21) Д-74/ 2010 (15) 17.03.2011.
(22) 10.08.2010.
(30) Д -0074/2010 10.08.2010. RS
(28) 1
(54) BOCA
(73) PREDUZEĆE ZA EKSPLOATACIJU MINERALNE VODE I PROIZVODNJU BEZALKOHOLNIH PIĆA "VODA VRNJCI" A.D., Kneza Miloša 162, 36210 Vrnjačka banja, RS
(74) MANIGODIĆ Milenko, Kumanovska 2b, 11000 Beograd, RS

(11) 10689 **(51) 26-05**
(21) Д-19/ 2010 (15) 31.03.2011.
(22) 22.03.2010.
(30) Д -0019/2010 22.03.2010. RS
(28) 4
(54) ZIDNA SISTEMSKA SVETILJKA (2x) I VISEĆA SISTEMSKA SVETILJKA (2x)
(73) Društvo za proizvodnju, inženjering i usluge "BUCK" d.o.o. Beograd, Milorada Jovanovića 9, 11000 Beograd, RS

(11) 10690 **(51) 03-01**
(21) Д-79/ 2010 (15) 31.03.2011.
(22) 31.08.2010.
(30) Д -0079/2010 31.08.2010. RS
(28) 1
(54) PREKLOPNA FUTROLA SA ZNAČKOM
(73) "DUNESA" d.o.o. Subotica, Albe Fanciškovića 32, 24000 Subotica, RS
(72) ZARIĆ Slavomir, Albe Franciškovića 32, 24000 Subotica, RS

(11) 10691 **(51) 21-03**
(21) Д-34/ 2010 (15) 31.03.2011.
(22) 14.04.2010.
(30) Д -0034/2010 14.04.2010. RS
(28) 1
(54) RULET BEZ KROVA
(73) DELIĆ Branko, Gradsko Šetalište 153, 32000 Čačak, RS
(72) DELIĆ Branko, Gradsko Šetalište 153, 32000 Čačak, RS

(11) 10692 **(51) 07-04**
(21) Д-5/ 2011 (15) 15.04.2011.
(22) 11.02.2011.
(30) Д -0005/2011 11.02.2011. RS
(28) 3
(54) DASKA ZA POSLUŽIVANJE
(73) CRNČEVIĆ Dalibor, Karnegijeva 3, 11000 Beograd, RS
(72) CRNČEVIĆ Dalibor, Karnegijeva 3, 11000 Beograd, RS

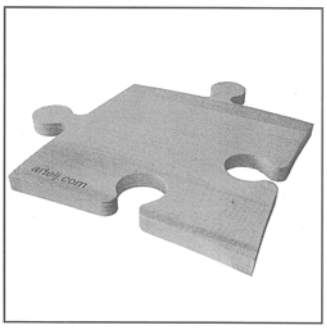

---

(11) 10693 **(51) 32-00**
(21) Д-50/ 2010 (15) 15.04.2011.
(22) 31.05.2010.
(30) Д -0050/2010 31.05.2010. RS
(28) 1
(54) ŠARA ZA KESU ZA ZAČIN ZA PLJESKAVICU
(73) MLADOST D.O.O., Svetoilijska 108, 16000 Leskovac, RS
(72) MITROVIĆ Srđan, Svetoilijska 108, 16000 Leskovac, RS

ИНДЕКСНЕ ТАБЕЛЕ ЗА ДИЗАЈН

INDEX TABLES FOR DESIGNS

- **ИНДЕКС НОСИЛАЦА ДИЗАЈНА (стр. 2232)**
- INDEX OF THE OWNERS (p. 2232)
- **ИНДЕКС БРОЈЕВА ДИЗАЈНА (стр. 2233)**
- INDEX OF THE DESIGNS NUMBERS (p. 2233)
- **ИНДЕКС ПО КЛАСАМА И ПОДКЛАСАМА ЛОКАРНСКЕ КЛАСИФИКАЦИЈЕ (стр. 2233)**
- INDEX ACCORDING TO CLASSES OF THE LOKARNO CLASSIFICATION (p. 2233)

ИНДЕКС НОСИЛАЦА ДИЗАЈНА

INDEX OF THE OWNERS

(73)	(51)	(21)	(30)	(11)
BKG Ortačka radnja	03.01	Д-63/ 2010	01.07.2010.	10687
CRNČEVIĆ Dalibor	07.04	Д-5/ 2011	11.02.2011.	10692
DELIĆ Branko	21.03	Д-34/ 2010	14.04.2010.	10691
Društvo za proizvodnju, inženjering i usluge BUCK d.o.o. Beograd	26.05	Д-19/ 2010	22.03.2010.	10689
DUNESA d.o.o. Subotica	03.01	Д-79/ 2010	31.08.2010.	10690
MLADOST D.O.O.	32.00	Д-50/ 2010	31.05.2010.	10693
PČELARSKA ZADRUGA HOMOLJEMED – Žagubica	09.03	Д-76/ 2010	24.08.2010.	10680
PREDUZEĆE ZA EKSPLOATACIJU MINERALNE VODE I PROIZVODNJU BEZALKOHOLNIH PIĆA "VODA VRNJCI" A.D.	09.01	Д-74/ 2010	10.08.2010.	10688
PREDUZEĆE ZA PROIZVODNJU, PROMET I USLUGE POLIMARK DOO BEOGRAD	09.01	Д-2/ 2011	24.01.2011.	10684
PUDJA Stipo	12.16	Д-9/ 2010	17.02.2010.	10685
SHITAL PURI	10.05	Д-49/ 2010	28.05.2010.	10683
STANKOVIĆ Milan; GRUJIĆ Jovan and TABAKOVIĆ Slobodan	24.02	Д-7/ 2010	08.02.2010.	10681
TOPOLŠEK Vladimir	21.02	Д-61/ 2010	25.06.2010.	10686
VODA VRNJCI a.d.	09.01	Д-95/ 2010	11.11.2010.	10682

ИНДЕКС БРОЈЕВА ДИЗАЈНА

INDEX OF THE INDUSTRIAL DESIGNS NUMBERS

(11)	(21)
10680	Д-76/ 2010
10681	Д-7/ 2010
10682	Д-95/ 2010
10683	Д-49/ 2010
10684	Д-2/ 2011
10685	Д-9/ 2010
10686	Д-61/ 2010
10687	Д-63/ 2010
10688	Д-74/ 2010
10689	Д-19/ 2010
10690	Д-79/ 2010
10691	Д-34/ 2010
10692	Д-5/ 2011
10693	Д-50/ 2010

ИНДЕКС ПО КЛАСАМА И ПОДКЛАСАМА ЛОКАРНСКЕ КЛАСИФИКАЦИЈЕ

INDEX ACCORDING TO CLASSES OF THE LOKARNO CLASSIFICATION

(51)	(11)
03.01	10687
03.01	10690
07.04	10692
09.01	10682
09.01	10684
09.01	10688
09.03	10680
10.05	10683
12.16	10685
21.02	10686
21.03	10691
24.02	10681
26.05	10689
32.00	10693

ОБЈАВА УПИСАНИХ ПРОМЕНА РЕГИСТРОВАНОГ ДИЗАЈНА ОД 06.04. 2011. ДО 05.06.2011. ГОДИНЕ

Publications of Entered Changes of Registered Desion from April 6th, 2011 to June 5th, 2011

1. Упис залоге

За дизајн бр. **10396** уписана је залога на CREDIT AGRICOLE BANKA SRBIJA AKCIONARSKO DRUŠTVO NOVI SAD, Braće Ribnikar 4-6, 21000 Novi Sad, RS

За дизајн бр. **10397** уписана је залога на CREDIT AGRICOLE BANKA SRBIJA AKCIONARSKO DRUŠTVO NOVI SAD, Braće Ribnikar 4-6, 21000 Novi Sad, RS

За дизајн бр. **10395** уписана је залога на CREDIT AGRICOLE BANKA SRBIJA AKCIONARSKO DRUŠTVO NOVI SAD, Braće Ribnikar 4-6, 21000 Novi Sad, RS

За дизајн бр. **10394** уписана је залога на CREDIT AGRICOLE BANKA SRBIJA AKCIONARSKO DRUŠTVO NOVI SAD, Braće Ribnikar 4-6, 21000 Novi Sad, RS

ПРЕСТАНАК ВАЖНОСТИ РЕГИСТРОВАНОГ ДИЗАЈНА

1. Због неплаћања таксе за одржавање права у периоду од 06. 10. 2010. до 05. 12. 2010. године:

Дизајн бр. **10242** чији је носилац Пророад – Мендрагић Марина и партнери О.Д. , Станка Вража 33, 11120 Београд, RS, престао је да важи дана 09.11.2010. године.

Дизајн бр. **10324** чији је носилац HOPPE AG, AM PLAUSDORFER TOR 13 D-35260 STADTALLENDORF, DE, престао је да важи дана 22.10.2010. године.

Дизајн бр. **10342** чији је носилац GRIPPLE LIMITED, THE OLD WEST GUN WORKS, SAVILE STREET EAST, SHEFFIELD S47UQ, GB, престао је да важи дана 29.10.2010. године.

Дизајн бр. **10345** чији је носилац TOSHIYUKI KITA, 1DK-DESIGN, TS BLDG 2F 3-1-2 TENMA, KITA-KU, JP-530-0043 OSAKA, JP, престао је да важи дана 13.10.2010. године.

Дизајн бр. **10352** чији је носилац THE GILLETTE COMPANY, PRUDENTIAL TOWER BUILDING, BOSTON, MA 02199, US, престао је да важи дана 27.10.2010. године.

Дизајн бр. **10353** чији је носилац THE GILLETTE COMPANY, PRUDENTIAL TOWER BUILDING, BOSTON, MA 02199, US, престао је да важи дана 27.10.2010. године.

Дизајн бр. **10362** чији је носилац SONY COMPUTER ENTERTAINMENT INC. 2-6-21, MINAMI-AOYAMA, MINATO-KU, TOKYO 107-0062, JP, престао је да важи дана 12.11.2010. године.

Дизајн бр. **10373** чији је носилац Ивана Калина Митовић, Београд, Булевар АВНОЈ-А 113 IV улаз, RS, престао је да важи дана 26.10.2010. године.

Дизајн бр. **10374** чији је носилац Ивана Калина Митовић, Београд, Булевар АВНОЈ-А 113 IV улаз, RS, престао је да важи дана 26.10.2010. године.

Дизајн бр. **10379** чији је носилав Јавно предузеће ПТТ Саобраћаја Србија, Таковска 2, 11000 Београд, RS, престао је да важи дана 08.10.2010. године.

Подлистак
Supplement

САДРЖАЈ	CONTENTS
• **СВЕТСКА ОРГАНИЗАЦИЈА ЗА ИНТЕЛЕКТУАЛНУ СВОЈИНУ (WIPO), САВЕТОДАВНИ КОМИТЕТ ЗА СПРОВОЂЕЊЕ ПРАВА (ACE)** **Шесто заседање** **Извештај** **Женева, 01 – 02. децембар 2010. године**	• **WORLD INTELLECTUAL PROPERTY ORGANIZATION (WIPO)** **ADVISORY COMMITTEE FOR ENFORCEMENT (ACE)** **The Sixth Session** **Report** **Geneva, December 1-2, 2010**
• **СЕМИНАР "ЕВРОПСКИ ПАТЕНТНИ СИСТЕМ ОД ПОДНОШЕЊА ДО ДОНОШЕЊА РЕШЕЊА"(OC37-2011),** **Извештај** **Сан Марино, 13 - 15. април 2011. године**	• **SEMINAR „THE EUROPEAN PATENT SYSTEM FROM FILING TO GRANT“(OC37-2011),** **Report** **San Marino, April 13 - 15, 2011**

СВЕТСКА ОРГАНИЗАЦИЈА ЗА ИНТЕЛЕКТУАЛНУ СВОЈИНУ (WIPO) САВЕТОДАВНИ КОМИТЕТ ЗА СПРОВОЂЕЊЕ ПРАВА (ACE)

Шесто заседање
Женева, 01 – 02. децембар 2010. године

И З В Е Ш Т А Ј

Бранка БиленКатић, помоћник директора
Завода за интелектуалну својину Републике Србије

Као представник Републике Србије, састанку је присуствовала Бранка Билен Катић, помоћник директора Завода за интелектуалну својину Републике Србије.

ПРЕДЛОЖЕНИ ДНЕВНИ РЕД ЗАСЕДАЊА

1. Отварање састанка
2. Избор председавајућег
3. Захтев НВО за присуство састанку
4. Усвајање агенде
5. Дискусија о активностима које су предложене на петом састанку Комитета, а којим је Секретаријат био позван да предузме одређене активности у погледу развоја студије, анализа и дискусија о повредама права ИС
6. Активности WIPO у погледу поштовања права ИС
7. Даље активности ACE
8. Сумирање дискусије од стране председавајућег
9. Крај састанка

ТОК ЗАСЕДАЊА И ПИТАЊА О КОЈИМА ЈЕ РАСПРАВЉАНО

Заменик директора WIPO (Christian Wichard) отворио је скуп и истакао значај поштовања интелектуалне својине (ИС). Затим се приступило избору Председника ACE за овај састанак. Након састанака регионалних координатора, Макиса Агуасто из Анголе који је предложен од стране УСА, изабран је да председава овим скупом.

Тачка 4, усвајање агенде, изазвала је велику полемику међу државама чланицама WIPO. Прво је реаговала представница Бразила која је покренула питање координационих механизама и потребу да се уведе додатна тачка дневног реда, нова тачка 7, која би се односила на допринос ACE примени Развојне агенде. На то је, у име ЕУ, реаговала Белгија. Представник Белгије је истакао да су на ову тему већ обављене консултације у оквиру регионалних група и да ЕУ не може да подржи ову иницијативу. Представник Словеније који председава групом земаља Централне европе и Балтичких земаља, додао је да узимајући у обзир WIPO документ, ово не може да буде посебна тачка агенде. Председавајући је предложо да се у оквиру теме 6 обради извештај о координационом механизму, поготово узимајући у обзир то да овај Комитет има само саветодавну улогу. Представник Белгије прихватио је да се о овоме расправља у оквиру постојећих тачака дневног реда. Након дуге дискусије договорено је да се дневни ред само провизорно усвоји и да се приступи презентовању студија и радова који су иницирани на прошлогодишњем састанку ACE.

Уследила је прва од седам презентација у оквиру тачке 5 коју је презентовао представник WIPO гдин Карстен Финк, а у вези са студијом о Социо-економском аспекту кривотворења и пиратерије. Његово излагање структуирано је у три дела и то: теоретско разматрање појмова кривотворења и пиратерије, преглед постојећих студија и препоруке за прикупљање података о кривотворењу и пиратерији.

Теоретско разматрање кривотворења посматрано је у односу на различите економске ефекте. Тако на пример, у студији се истиче да у случају кривотвореног жига, купци могу бити у заблуди приликом куповине неке робе, али могу бити и свесни да купују кривотворени производ. Прва група купаца је незадовољна јер се осећа превареном, с обзиром да је купила робу лошег квалитета или опасну по здравље, и ова група купаца би вероватно, уместо кривотворене робе, купила оригиналну да је била свесна преваре. Друга група купаца купује свесно кривотворену робу јер купује статусни симбол који себи не може другачије да приушти. У погледу пиратерије теоретска разматрања су другачија, јер је ову врсту производа могуће дисеминирати са минималним или никаквим додатним трошковима, а производ који је предмет пиратерије неће добити никакав финансијски повраћај. Овде је напоменуто да би проблем пиратерије могао донекле да се решава и тако што би власници ауторског права водили рачуна о цени и начину формирања цене. С друге стране, економска рачуница у случају пиратерије је додатно закомпликована тиме што је примећено да се у случају софтверске пиратерије повећава и број корисника легалног програма, односно повећава и промет оригиналног производа, док у музичкој и филмској пиратерији постоји тзв. peering effect, корисници пиратског примерка повећавају тражњу за оригиналним производом.

У погледу анализе постојећих студија, г-дин Финк је урадио анализу која је укључила поређење како недостатака тако и предности постојећих студија, али и питање квалитета података који се прикупљају. У погледу квалитета података, г-дин

Финк је између осталог навео како је установљено током рада на студији, да је тачности података о економској процени кривотворења и пиратерије, односно губитка у међународној трговини, врло велико питање. Наиме, он је установио да иза података о трговини кривотвореним и пиратским производима коју је дао ОЕЦД (200 милијарди US$ у 2005, односно 250 милијарди US$ у 2007.г) не стоји права анализа, нити подаци који поткрепљују ове цифре. Такође, подаци о запленама су релативни подаци. Ови подаци се уз одређене претпоставке могу трансформисати у апсолутне податке, али и ту долази до грешке. Додатни проблем приликом анализе података о запленама настаје због нејединствене категоризације робе. Додатни извор података је индустрија, али ни њихови подаци не могу да се сматрају тачним, јер неке компаније увећавају, док неке смањују те бројке.

На крају је г-дин Финк изнео препоруке и оне се углавном односе на следеће:

- постоји потреба за израдом студија, јер само тако може да се сагледа величина проблема;
- главни проблем који је идентификован је тачност података;
- постојеће студије мало пажње посвећују утицају кривотворења и пиратерије на добробит друштва у целини;
- постоји потреба за хармонизацијом података; студија предлаже да се као полазна основа узму подаци у формату царинских служби, јер су царинске службе у ЕУ хармонизовале статистику.

Након ове презентације уследила је расправа и представник Обсерваторије Европске комисије (ЕК), г-дин Филип Луис представио је планове и истакао да ЕК жели да уведе концепт континуалног праћења кривотворења и пиратерије, а не спорадичног. Такође, истакао је да је отпочела прва фаза прикупљања и анализе података и да је планирано да се за шест месеци изради предлог методологије, а за годину дана би био доступан нацрт извештаја. Европска комисија жели да ова методологија обухвати утицај кривотворења и пиратерије на здравље и безбедност, на запошљавање и на иновације.

Остале земље које су се прикључиле дискусији су покренуле питање утицаја кривотворења и пиратерије на радна места и показале заинтересованост за резултате рада Обсерваторије.

Следеће излагање на тему Вредности кривотворења и пиратерије, односно покушај да се квантификује економски ефекат пиратерије и кривотворења робе, г-дина Лорена Јагера, структуиран је на веома сличан начин као и рад г-дина Финка, али с обзиром да је документ рађен за потребе Америчког Конгреса, узима у обзир податке америчких агенције и привреде, као и мањи број студија. У закључаку овог рада такође је истакнут проблем непоузданости података о кривотворењу и пиратерији. У раду је као додатни аргумент у прилог нетачности података изнет проблем одређивања вредности заплењене робе, односно разлика приликом утврђивања вредности робе коју заплене царинске службе. Једна вредност се добија ако се узима вредност која стоји у царинским документима, док се друга вредност добија уколико се рачуна колико би та роба вредела на тржишту.

Наредну студију, на тему Пиратерија у медијима у економијама у развоју, цене, структура тржишта и навике потрошача, представио је г-дин Караганис. Ова студија ни након три године рада још није окончана и излагање г-дина Караганиса изазвало је велику полемику.

До сада, током израде Студије, идентификована су три проблема, и то: питање организоване пиратерије, организација за спровођење права и питање извора и поузданости података, односно ко обезбеђује податке и колико су они поуздани. Велики део своје презентације г-дин Караганис је посветио анализи цена ове врсте робе у појединим земљама и закључено је да су оне високе у поређењу са економским могућностима становништва. Интересантна је упоредна тебела приказана у оквиру ове презентације која анализира „стварну“ цену ДВД-ја у разним земљама. У другој колони табеле приказана је „релативна“ цена тог истог ДВД-ја у односу на стандард становништва те земље, и у наредне две колоне на исти начин представљене су цене пиратских ДВД-јева.

$	Легални ДВД	Стварна цена (прерачуната по куповној моћи)	Пиратски ДВД	Стварна цена
САД	24	-	5	-
Русија	15	79	5	26,5
Бразил	15	85	3,5	20
Индија	14	635	0,75-1,2	5,4
Мексико	27	154	0,75	4,25

Може се приметити да је цена ДВД прилично уједначена (14-15$) без обзира на економску моћ земље и то због тога што цену диктирају велике мултинационалне компаније које своје калкулације раде на основу земаља које имају велику куповну моћ и које купују највећи део проиводње (САД, УК и Јапан). Мултинационалне компаније нису заинтересоване за сиромашна тржишта, јер оне у свом пословању имају само два циља: да се заштите на тржишту које доноси приход и да имају доминантан положај у земљама у развоју, али их не интересује да на тим тржиштима буду конкурентни.

Кад анализирамо цене пиратских ДВД-јева, реална цена је око 1$, а све преко тога је трошак који је узрокован појачаним радом агенција за спровођење права, што је најочитије на примеру Бразила, Русије и САД, с тим што је Русија посебан случај. Висока цена пиратских ДВД-јева у Русији последица је монопола пиратских произвођача који су се, након акција на сузбијању пиратерије које је држава обављала током 2006 и 2007.г, удружили и сада диктирају цене.

Даља анализа, рађена у оквиру студије, узела је у обзир степен пиратерије у случајевима домаће продукције. Испоставило се да земље које имају јаке националне продукције као што су Индија и Мексико, не зависе од диктата цена мултинационалних продукцијских кућа и да су цене тих ДВД-јева у складу са куповном моћи потрошача.

Такође аутори ове студије сматрају да је у данашње време развијених ИКТ, смањено учешће организованог криминала у пословима око пиратерије, јер пиратеријом сада може свако да се бави и то раде углавном млади људи.

Порука ове студије односи се на три правца деловања: активно спровођење, образовање и економија.

У погледу спорвођења права, аутори студије дошли су до интересантног податка да и поред тога што је у Индији, Мексику и Јужној Африци дошло до пораста броја рација од неколико хиљада пута, није примећен пораст броја пресуда, јер у систему спровођења права нема капацитета да се процесуира неколико хиљада случајева.

Ова студија изазвала је дискусију и доста контроверзи, јер се ставови ове студије супротстављају неким претходним студијама. Представница Бразила је истакла да су цене приказане у студији врло умерене, јер су цене у већини продавница веће од 15$. Ова студија је иницирала дискусију представника земаља у развоју која се наставила до краја овог скупа, а тиче се одговорности држава и државних институција за спровођење приватних права носилаца права и тумачење ТРИПС споразума. Представник ЕУ истакао је да у борби са пиратеријом носиоци права и продуценти нису у истом положају, јер колико год да се спусти цена легалног ЦД-а или ДВД-ја, произвођачи пиратских производа могу да послују по још нижим ценама, с обзиром да практично немају трошкове пословања. На то је г-дин Караганис одговорио да је јасно да ниже цене не значе да ће пиратерија нестати, већ да ће обим пиратерије бити мањи, а тада има простора за рад институција за спровођење права ИС. На крају дискусије САД је подржала став ЕУ да проблем пиратерије треба решавати кроз појачано спровођење права, а не снижавањем цена; цена у медијској пиратерији ускоро неће бити предмет разматрања с обзиром да је данас доступност музичких и филмских садржаја преко интерета широко раширена; у тим случајевима цена поменутих садржаја једнака је нули.

У наредном излагању, на тему Ставови и перцепција потрошача у погледу кривотворења и пиратерије, које је обрадио г-дин Харди из Међународне привредне коморе, приказана је анкета која је вршена међу потрошачима, а чији је циљ био да се установи зашто се потрошачи одлучују за куповину ове врсте производа. У истраживању, проблем кривотворења и пиратерије приказан је из угла тражње за овом врстом производа. За потребе студије анализирано је питање шта подстиче потрошаче да купују кривотворену робу. Утврђено је да су доминантни подстицаји ниска цена, непостојање ризика од казне и друштвена прихватљивост ове врсте понашања. Главни разлози против куповине кривотворених производа односе се на заштиту здравља и безбедности потрошача, страх од правних последица, повезаност кривотворења и организованог криминала.

Налази студије су следећи:

- У просеку, 80% потрошача је бар једном купило кривотворен или пиратски производ.
- Проценат потрошача који купују кривотворене/пиратске производе опада са порастом имовинског стања потрошача.
- Купци ових производа заступљени су у свим старосним групама.
- Најчешће се купују кривотворени/пиратски производи као што су ДВД и ЦД, одећа и компјутерски софтвер.
- Најређе се купују кривотворене/пиратске цигарете и лекови.
- Постоји изражена веза између учесталости куповине и доступности ових производа.
- И даље постоји значајна разлика између земаља, али
- На основу података из пет земаља, куповина кривотворених производа обављена је у регуларним продавницама. То се нарочито односи на лекове и алкохолна пића, док се ЦД и ДВД најчешће продају на улици.

Након ове презентације, покренута је дискусија када је реч о тумачењу појма кривотворења у смислу чл. 61 ТРИПС-а и кривичних санкција у погледу кривотворења и пиратерије које ТРИПС предвиђа. Наиме, инсистирало се да се појам кривотворења посматра само у погледу жигова, а не када је реч о патентима, с обзиром да се у студији помињу кривотворени лекови који су заправо повреда патента и не потпадају под термин кривотворење. Додатно, земље у развоју истицале су и трошкове које државе имају у погледу спровођења права интелектуалне својине које је заправо приватно право.

Наредна презентација на тему повреде и спровођења права ИС, коју је представио гдин Сисуле Мусунг, председник IQsensato, надовезала се на ову дискусију, јер се у уводном делу овог рада поставило питање дефинисања кривотворења и све чешћа примена појма „кривотворење“ на све врсте повреде права ИС.

Последњи рад који је приказан у оквиру тачке 5 односио се на проблеме складиштења и уништења. Истакнути су проблеми трошкова у вези са складиштењем и уништењем које сносе или носилац права или држава, и висина тих трошкова нарочито ако се узме у обзир заштита животне средине. Стога је у овом раду исказана потреба за хармонизацијом и поједностављењем процедура за уништење које би примењивале институције за спровођење права, јер је основни узрок високих трошкова складиштења дужина судских поступака. Носиоци права су демотивисани да користе механизам појачаног надзора на граници и на тржишту одређене земље услед дужине судских поступака који некада могу да трају и до шест година, а што ће дугорочно угрозити безбедност потрошача и животну средину.

У овом раду, у циљу решавања ових проблема, приказани су могући приступи:

- Специјализација судства - поједине земље имају на располагању специјализоване судове за поступање у овим случајевима
- Доступност репрезентативних узорака и фотографисање доказа
- Прописивање дужине трајања поступка
- Коришћење поједностављених управних процедура
- Остали управни правни лекови

Последња презентација г-дина Бен Хоровица, на тему Филмска индустрија у Јужној Африци, изазвала је оштру реакцију представника Јужне Африке. Господин Хоровиц је изнео општу критику ситуације у Јужној Африци у којој, према његовим речиме, више од половине продатих ДВД-јева заузимају пиратски производи. Он је окупио групу младих људи и организовао уличну продају легалних производа како би конкуренцијом покушали да смање удео пиратске продаје. Паралелно са тим радили су на едукацији потрошача, али након шест месеци рада морали су да обуставе пројекат. Према његовим речима, разлози за неуспех између осталог леже у јакој конкуренцији међу пиратским дистрибутерима. Представници Јужне Африке изразили су протест због документа WIPO/ACE/6/9 у ком је представљена ова студија и постигнут је договор да се обаве билатерални разговори у присуству Секретаријата.

Након окончања теме 5 поново је уследила дискусија око усвајања дневног реда, и након дуготрајних консултација договорено је да се измени тачка 7. Затим се приступило раду у оквиру тачке 6; представници Секретаријата ACE информисали су присутне о активностима у протеклом периоду у погледу поштовања права ИС, обуке, изградње капацитета, активности у погледу међународне сарадње и размене информација.

У оквиру теме 7, плана рада за наредни период, Секратаријат ACE представио је документ WIPO/ACE/6/3. Државе чланице су изнеле своје предлоге за даљи рад који се односе на наставак активности иницираних на петом састанаку ACE . Такође, иницирано је да се уради анализа обавеза носилаца права као механизма који подржава напоре земаља у области спровођења права ИС. Постигнут је договор да ће изнети предлози бити разрађени и да ће послужити као основа за дискусију на наредном, седмом састанку ACE. У оквиру ове тачке председавајући је позвао делегације да изнесу своје виђење доприноса ACE примени WIPO развојне агенде. Након тога, неколико делегација држава чланица дало је своје изјаве.

У погледу координационог механизма и надзора који су на петом састанку CDIP-а договорени као методе за надзор и извештавање, председавајући се обавезао да ће проследити Генералној скупштини WIPO изјаве које су државе чланице поднеле у оквиру проширене тачке 7.

С Е М И Н А Р
"ЕВРОПСКИ ПАТЕНТНИ СИСТЕМ ОД ПОДНОШЕЊА ДО ДОНОШЕЊА РЕШЕЊА" (ОС37-2011)
Сан Марино, 13 - 15. април 2011. године

И З В Е Ш Т А Ј

Јелена Лопушина, дипл. маш. инж.
Дипл. фармацеут ***Зорана Зрнић-Вукојевић***, спец.

У периоду од 13-15. априла 2011. год. у Сан Марину је, у организацији Европске патентне академије, одржан тродневни семинар на тему „Европски патентни систем од подношења до доношења решења“. Семинару је присуствовало десет учесника из Сан Марина, Албаније, Естоније, Пољске и Србије.

Из Завода за интелектуалну својину Републике Србије, семинару су присуствовале Јелена Лопушина, начелник у Одељењу за машинство, електротехнику и општу технику и Зорана Зрнић-Вукојевић, начелник у Одељењу за хемију и хемијску технологију.

Семинар је обухватао предавања која су се односила на поступак рада по патентној пријави од подношења пријаве ЕПО-у па све до доношења решења о признању патента или одбијања исте и могућности подношења приговора, што је исти ниво/ први ниво, а затим и жалбе/други ниво.

Поступак испитивања пријаве почиње подношењем патентне пријаве ЕПО-у, утврђивањем датума подношења и провере формалних захтева. Када су претходни захтеви испуњени пријава улази у фазу испитивања, претраживања претходног стања технике а ту је и израда писаног мишљења (*ESOP-European Search Opinion*).

Након 18 месеци од датума подношења, или датума приоритета, патентна пријава се објављује са извештајем о претраживању; документ има ознаку *A1*. Пријаве у ЕПО-у се објављују једном недељно и то сваког четвртка.

Уколико извештај о претраживању није могуће урадити, пријава ће бити објављена у прописаном року без решершног извештаја- документ *A2*. Решершни извештај који је урађен после објаве пријаве се објављује посебно и може се наћи-видети на *Publication- Server*-у - има ознаку *A3*. Писано мишљење се не објављује заједно са решершним извештајем, али је доступно јавности као део писане процедуре на *on-line file inspection*-у.

За нас је било важно да сазнамо како се поступа са пријавама које су нејасне и код којих се не може урадити извештај о претраживању стања технике. Када су патентни захтеви нејасни тако да се не може урадити ни парцијални решершни извештај, пријава се објављује након 18 месеци онаква каква је поднета, а затим се позива подносилац пријаве да се изјасни о предмету проналаска и да наведе шта да се претражује, односно за који проналазак да се уради извештај о стању технике. На овај начин се поштује рок за објаву пријаве, као и услов да се пре извештаја о претраживању стања технике не могу мењати патентни захтеви и опис.

После израде извештаја о претраживању стања технике прелази се на суштинско испитивање патентне пријаве.

Суштинско испитивање пријаве, поред многих захтева које прописује Конвенција о европском патенту-КЕП, обухвата:

– како је проналазак откривен и дефинисан:
  - јасно дефинисан предмет заштите (чл.84. КЕП),
  - потпуно откривен проналазак (чл.83. КЕП),
  - јединство проналаска (чл.82. КЕП).

– патент може бити одобрен за проналазак који је:
  - нов (чл.54. КЕП),
  - инвентиван (чл.56. КЕП),
  - индустријски примењљив (чл.57. КЕП),
  - и није изузет из заштите патентом (чл.52-53 КЕП).

У поступку суштинског испитивања се испитују сви горе наведени захтеви, користећи цитирана документа из претходног стања технике као подршка аргументима који се наводе у писаном мишљењу.

Сви наводи и аргументи у вези проналаска морају бити подржани доказима. Подносилац пријаве и испитивач у писаној комуникацији размењују објективне чињенице и аргументе, јер „нема одлуке на основу неразматраних аргумената“.

Уколико су испуњени сви прописани услови у току суштинског испитивања, доноси се решење о признању патента и тај документ има ознаки *B1*; у супротном патентна пријава се одбија.

На семинару је истакнуто да има пријава које се дуго испитују, а као пример наведена је пријава *EP* 1994 0112010 поднета 1994.год. и испитивање још траје.

После одлуке о признању патента могуће је покренути три различита поступка:

- приговор,
- лимитацију (ограничење),
- повлачење.

Поступак по приговору је поступак између две стране, односно између носиоца патента и подносиоца приговора пред Одељењем за приговоре при чему се носилац патента и опонент, за време расправе, не обраћају један другом већ износе и бране чињенице пред члановима одељења који усмеравају дискусију.

Поступак по приговору се може окончати на три начина и то :

1. одбијање приговора - патент остаје у важности (*B1*)
2. делимично усвајање приговора - патент важи са изменама (*B2*)
3. прихватање приговора у потпуности - поништај патента.

Рок за подношење приговора је 9 месеци од дана објављивања патента и то може свако лице осим носиоца патента, а подноси се ЕПО-у у Минхену, Хагу или Берлину, на посебном обрасцу који садржи податке о патенту и подносиоцу, уз обавезно плаћање таксе и достављање доказа који су основ за подношење приговора.

У 2008. години је поднет приговор за 5% решења, од тога је 28,6% приговора одбијено, 39,8% патената повучено и 31,6% патената остало у измењеној форми.

Поступак лимитације, односно ограничења патента - носилац патента може, у свако време после доношења решења о признању патента, да захтева ограничење подношењем новог сета патентних захтева.

Поступак повлачења - носилац патента може, у свако време после доношења решења о признању патента, да захтева повлачење патента.

После одлуке по приговору може се поднети жалба у року од 2 месеца. Жалбу може поднети и носилац патента.

Потребно је нагласити да је поступак испитивања пријава у потпуности прописан Конвенцијом о европском патенту (КЕП), правилником и Методологијом за испитивање. Предавачи су то посебно истицали и показивали на тај начин што су за сваки корак у поступку испитивања наводили члан КЕП-а , а на свако питање давали објашњење подржано прописима КЕП-а и методологијом.

У Конвенцији о европском патенту из 2010.год. измењен је рок за подношење издвојене пријаве, који сада износи 24 месеца од прве писане комуникације за ранију пријаву или 24 месеца од прве писане комуникације за ранију пријаву када је наведено да није испуњен услов јединства проналаска; наравно, испитивање раније пријаве мора да је у току, односно да није окончано.

На семинару су, такође, појашњени сви обрасци који се користе за подношење пријаве и приговора, затим наглашено је обавезно плаћање такси које се мењају на сваке две године и без којих се не може започети ниједан поступак у току испитивања пријаве као ни добити решење о признању патента.

Семинар је испунио очекивања посебно у делу израде извештаја о претраживању и писаног мишљења , што је значајно за свакодневни рад испитивача.

Упутство за писање прилога за "Подлистак "

Ради једнообразности и лакше обраде, молимо да прилози за *Гласник интелектуалне својине* имају следећу форму:

- текстови морају бити куцани или штампани на белој банкпост хартији, са једне стране, са 27-30 редова на једној страни и маргинама које обезбеђују 60 словних места у једном реду;

- уз то, потребно је слати дигитални запис текста на дискети од 3 ½ инча, CD (compact discu) или ел. поштом на e-mail: iuzelac@zis.gov.rs уз коришћење True Type unicode фонтова пожељно Times New Roman, из разлога компатибилности са другим корисницима и што оперативни систем на коме се ради у Заводу има инсталирану подршку за такве карактере;

- сваки рад мора бити потписан (име, презиме, адреса и број телефона аутора, стручна и/или научна титула, функција на послу и место запослења);

- напомене (фусноте) се прилажу на крају рада (како на примеру, тако и на дигиталном запису), означене бројевима од 1 па надаље, кроз цео рад;

- приликом цитирања књига, неопходно је придржавати се следећег редоследа података: презиме и име аутора, назив књиге, место издавања, година издавања, редни број тома, број странице и евентуално број тачке или пасуса;

- приликом цитирања радова из часописа и других периодичних публикација, неопходно је придржавати се следећег редоследа података: презиме и име аутора, назив рада, назив часописа или публикације, број часописа или публикације, година излажења, број странице;

- приликом цитирања управних и судских одлука поред службених ознака и датума доношења навести и извор у којем је одлука објављена;

- уколико се једно дело истог аутора цитира у више напомена (фуснота) које нису непосредно једна иза друге после презимена и имена аутора, други и сваки наредни пут може се употребити скраћеница op.cit. Уколико се једно дело истог аутора цитира напоменама које следе непосредно једна за другом, после првог навођења потпуних података о аутору и делу може се употребити скраћеница ibid.

Радови који не одговарају овим стандардима неће моћи бити објављени без дораде, па је зато важно да се аутори већ при писању прилога за *Гласник интелектуалне својине* придржавају ових упутстава.

ГЛАСНИК ИНТЕЛЕКТУАЛНЕ СВОЈИНЕ 2011/3

Издавач:
ЗАВОД ЗА ИНТЕЛЕКТУАЛНУ СВОЈИНУ РЕПУБЛИКЕ СРБИЈЕ
Улица Кнегиње Љубице 5, 11102 Београд, Србија

Главни и одговорни уредник: Бранка Тотић

Уредник: Илија Узелац

Уредник подлистка: Данијела Стефанов

Уређивачки одбор: мр Бранка Билен - Катић
Мирјана Јелић
мр Мирела Бошковић
мр Владимир Марић
Зорана Зрнић
Јасминка Рељин
Јелена Лопушина

Технички уредник и коректор: Гордана Ђорђевић

Уредништво:
Завод за интелектуалну својину, Кнегиње Љубице 5,
11102 Београд, Република Србија
Тел: 011/20-25-965 (уредник)
факс: 011/311-23-77
E-mail: iuzelac@zis.gov.rs

Гласник интелектуалне својине је двомесечник.

Штампа:
Завод за интелектуалну својину

Тираж: 200 примерака
ГЛАСНИК ИНТЕЛЕКТУАЛНЕ СВОЈИНЕ је
службено гласило Завода за интелектуалну
својину Републике Србије

Ово издање на компакт диску уредио и урадио:
Светозар Јовићевић дипл. инг.ел.
Тел:+381(0)11 20 25 824
E-mail: sjovicevic@zis.gov.rs

CIP – Каталогизација у публикацији
Народна библиотека Србије, Београд
347.78
Гласник интелектуалне својине
[Електронски извор] = Intellectual property journal / главни и одговорни уредник Бранка Тотић ; уредник Светозар Јовићевић. - CD-ROM изд . - Електронски часопис. - Год. 84, бр. 4 (2005)- .- Београд (Кнегиње Љубице 5) : Завод за интелектуалну својину, 2005-. -CD-ROM ; 12цм
Двомесечно, - Има и штампано издање: Гласник интелектуалне својине = ISSN 0354-771X
ISSN 1452-2144 = Гласник интелектуалне својине (CD-ROM)
COBIS S.SR-ID 125436172

ISSN 1452-2144
9 771452 214000